RELOCATABLE CLASSROOMS
DUNSMORE ELEMENTARY SCHOOL

4717 DUNSMORE AVE. LA CRESCENTA, CA

GLENDALE UNIFIED SCHOOL DISTRICT

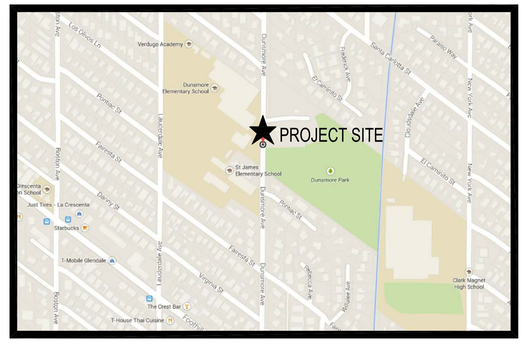

VICINITY MAP

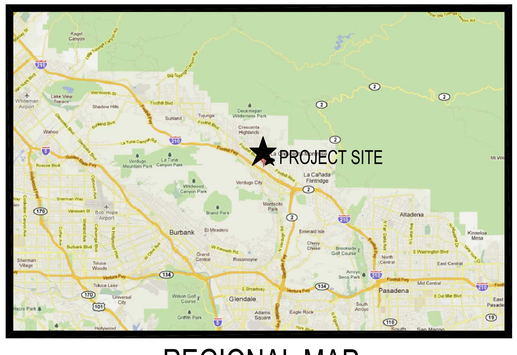

REGIONAL MAP

north

tBP /Architecture

4611 Teller Avenue - Newport Beach - California - 92660
http://www.tbparchitecture.com
ph: 949.673.0300 - fx: 949.732.3895

Architecture
Planning
Interiors

tBP
architecture
planning
interiors

tBP/Architecture
4611 Teller Avenue
Newport Beach, CA 92660
ph: 949.673.0300 fx: 949.732.3895

architect

consultant

FILE NO.:
IDENTIFICATION STAMP
DIVISION OF THE STATE ARCHITECT
DEPARTMENT OF GENERAL SERVICES
AC ____ FLS ____ SS ____
DATE ____

DEPARTMENT OF GENERAL SERVICES
DSA Los Angeles Regional Office
700 N. Alameda Street, Suite 5-500
Los Angeles, California 90012
ph: (213)897-3995 fx: (213)897-3159/0726

DUNSMORE ELEMENTARY SCHOOL
RELOCATABLE CLASSROOMS

GLENDALE UNIFIED SCHOOL DISTRICT
4717 DUNSMORE AVE.
LA CRESCENTA, CA 91214

owner

tBP project number : 20967.00
file name:
drawn by: checked by:
date: April 21, 2017

Rev:	date:	description:

THIS DRAWING AND THE DESIGNS, DEPICTIONS, IDEAS AND OTHER INFORMATION CONTAINED HEREIN CONSTITUTE UNPUBLISHED WORK OF tBPARCHITECTURE AND SHALL REMAIN THE PROPERTY OF tBPARCHITECTURE IN PERPETUITY. NO PART THEREOF SHALL BE REPRODUCED, DISCLOSED, DISTRIBUTED, SOLD, PUBLISHED OR OTHERWISE USED IN ANY WAY WITHOUT THE ADVANCED EXPRESS WRITTEN CONSENT OF tBPARCHITECTURE.

drawing title:
COVER SHEET

drawing no.:
T-1
drawing of

ABBREVIATIONS

&	AND	(E)	EXISTING	K	KIP (1000 LB)	R.	RISER
∠	ANGLE	EA.	EACH	KIT.	KITCHEN	RAD.	RADIUS
@	AT	E.J.	EXPANSION JOINT	KO	KNOCKOUT	R.D.	ROOF DRAIN
℄	CENTERLINE	ELEC.	ELECTRICAL	KVA	KILOVOLT AMPERE	RDWD.	REDWOOD
⌀	DIAMETER OR ROUND	ELEV.	ELEVATION			REF.	REFERENCE
#	NUMBER	EMER.	EMERGENCY	LAB.	LABORATORY	REFR.	REFRIGERATOR
		ENCL.	ENCLOSURE	LAM.	LAMINATED	REG.	REGISTER
AB	ANCHOR BOLT	ENG	ENGINEER	LAV.	LAVATORY	REINF.	REINFORCING
AC	ASPHALTIC CONCRETE	ENGY	ENERGY	LB.	POUND	REQD.	REQUIRED
ACP	ACOUSTICAL PANEL	ENTR	ENTRANCE	LDG	LANDING	RESIL.	RESILIENT
ACT	ACOUSTICAL TILE	EP	EPOXY ENAMEL	LL	LIVE LOAD	RET	RETURN
ACOUS	ACOUSTICAL	EQ.	EQUAL	LT	LIGHT	REV.	REVERSE
AD	AREA DRAIN	EQUIP.	EQUIPMENT	LTF	LINOLEUM TILE FLOORING	RFG	ROOFING
ADH	ADHESIVE	EST.	ESTIMATE	LTG	LIGHTING	RM.	ROOM
ADJ	ADJACENT	E.W.C.	ELECTRIC WATER COOLER	LVL	LEVEL	R.O.	ROUGH OPENING
AFF	ABOVE FINISH FLOOR	EWH	ELECTRIC WATER HEATER	LVR	LOUVER	R.T.F.	RUBBER TILE FLOORING
AFP	ACCORDIAN FOLDING PARTITION	EXH	EXHAUST				
AGGR	AGGREGATE	EXIST.	EXISTING	MAINT	MAINTENANCE	S.B.	SPLASH BLOCK
ALT	ALTERNATE	EXP.	EXPANSION	MAN	MANUAL	S.C.	SOLID CORE
ALUM	ALUMINUM	EXPSD.	EXPOSED	MAS	MASONRY	SCHED.	SCHEDULE
AMP	AMPERE	EXT.	EXTERIOR	MATL.	MATERIAL	SCN	SOLID CORE NATURAL FINISH
ANOD	ANODIZED			MAX.	MAXIMUM	SCP	SOLID CORE PAINT FINISH
APPROX	APPROXIMATELY	F	FACTORY FINISH	MCC	MOTOR CONTROL CENTER	SCPL	SOLID CORE PLAM FINISH
ARCH	ARCHITECT	F.A.	FIRE ALARM	MECH.	MECHANICAL	S.D.	STORM DRAIN
ASB	ASBESTOS	FC	FOOTCANDLE	MED	MEDIUM	SECT.	SECTION
ASSY	ASSEMBLY	F.D.	FLOOR DRAIN	MEZZ	MEZZANINE	SF	SQUARE FOOT
		FDC	FIRE DEPARTMENT CONNECTION	MFR.	MANUFACTURER	SHT.	SHEET
BAT	BATTERY	FDN	FOUNDATION	MH	MANHOLE	SIM.	SIMILAR
BBD	BULLETIN BOARD	F.E.	FIRE EXTINGUISHER	MIN.	MINIMUM	SLR	SEALER
BD	BOARD	F.E.C.	FIRE EXTINGUISHER CABINET	MIR	MIRROR	SPEC.	SPECIFICATIONS
BLDG	BUILDING	F.F.	FINISH FLOOR	MISC.	MISCELLANEOUS	SPLY	SUPPLY
BLKG	BLOCKING	F.G.	FINISHED GRADE	MKR	MARKER	SQ.	SQUARE
BLO	BLOWER	F.H.	FIRE HYDRANT	MTL.	METAL	S.SK.	SERVICE SINK
BLR	BOILER	FIN.	FINISH	MTD.	MOUNTED	SST.	STAINLESS STEEL
BLW	BELOW	F.L.	FLOW LINE	MUL.	MULLION	ST	STREET
BM	BEAM	FLASH.	FLASHING	MVBL	MOVABLE	STAG	STAGGERED
BO	BOTTOM OF	FLR.	FLOOR			STC	SOUND TRANSMISSION CLASS
BRKR	BREAKER	FLUOR.	FLUORESCENT	(N)	NEW	STD.	STANDARD
BTU	BRITISH THERMAL UNIT	F.O.	FACE OF	NAT.	NATURAL	STL.	STEEL
BUR	BUILT UP ROOFING	F.O.C.	FACE OF CONCRETE	NEG	NEGATIVE	STN	STAIN FINISH
		F.O.F.	FACE OF FINISH	N.I.C.	NOT IN CONTRACT	STOR	STORAGE
CAB	CABINET	F.O.M.	FACE OF MASONRY	NO.	NUMBER	STRUCT.	STRUCTURAL
CARP	CARPET	F.O.S.	FACE OF STUD	NOM.	NOMINAL	SURF	SURFACE
CAT	CATALOG	FPP	FOLDING PANEL PARTITION	N.T.S.	NOT TO SCALE	SUSP.	SUSPENDED
CB	CATCH BASIN	FPW	FOLDING PANEL WOOD DOOR			SV	SHEET VINYL
CEM	CEMENT	F.R.	FIRE RETARDANT	O.A.	OVERALL	SWBD	SWITCHBOARD
CF	CURB FACE	F.R.A.	FIRE RATED ASSEMBLY	O.C.	ON CENTER	SWGR	SWITCHGEAR
CFM	CUBIC FEET PER MINUTE	F.R.P.	FIBERGLASS REINFORCED PANEL	O.D.	OUTSIDE DIAMETER	SWR	SEWER
CHBD	CHALKBOARD	F.S.	FLOOR SINK	O.F.	OVERFLOW DRAIN	SYM.	SYMBOL
CHEM	CHEMICAL	FT.	FOOT OR FEET	OFCI	OWNER FURNISHED-CONTRACTOR INSTALLED	SYS	SYSTEM
CHWR	CHILLED WATER RETURN	FTG	FOOTING				
CHWS	CHILLED WATER SUPPLY	FURR.	FURRING	OFF	OFFICE	T.	TREAD
CI	CAST IRON	FXTR	FIXTURE	OFOI	OWNER FURNISHED-OWNER INSTALLED	T. & B.	TOP AND BOTTOM
CIR	CIRCLE					T. & G.	TONGUE AND GROOVE
CJ	CONTROL JOINT	G.	GAS	OPNG.	OPENING	T.C.	TOP OF CURB
CL	CENTERLINE	GA.	GAGE	OPP.	OPPOSITE	TD	TRENCH DRAIN
CLG	CEILING	GALV.	GALVANIZED	O/HD	OVERHEAD	TECH	TECHNICAL
CLO	CLOSET	GB	GRAB BAR			TEL.	TELEPHONE
CLRM	CLASSROOM	G.I.	GALVANIZED IRON	PART.	PARTITION	TEMP.	TEMPERATURE
CMT	CERAMIC MOSAIC TILE	GL.	GLASS	PB	PULL BOX	T.G.	TOP OF GRATE
CMU	CONCRETE MASONRY UNIT	GLU.LAM.	GLUE LAMINATED	PBD	PARTICLEBOARD	THK	THICK
CND	CONDUIT	GND.	GROUND	PC	PORTLAND CEMENT	THRES.	THRESHOLD
CO	CLEANOUT	GPM	GALLONS PER MINUTE	PD	PLANTER DRAIN	THRU	THROUGH
COL	COLUMN	GR.	GRADE	PERF	PERFORATED	TKBD	TACKBOARD
COMM	COMMUNICATION	GYP.	GYPSUM	PERP	PERPENDICULAR	T.O.	TOP OF
COMP	COMPOSITION			PE	PAINT EGGSHELL	T.O.P.	TOP OF PARAPET
CONC	CONCRETE	H.B.	HOSE BIBB	PF	PAINT FLAT	TOT	TOTAL
CONF	CONFERENCE	HCN	HOLLOW CORE NATURAL FINISH	PG	PAINT GLOSS	T.P.	TOP OF PAVING
CONN	CONNECTION	HCP	HOLLOW CORE PAINT FINISH	P.H.	PANIC HARDWARE	TRNSF.	TRANSFORMER
CONT	CONTINUOUS	HDBD.	HARDBOARD	PIV	POST INDICATOR VALVE	TW	TOP OF WALL
CONTR	CONTRACTOR	HDR	HEADER	P.L.	PROPERTY LINE	TYP.	TYPICAL
COORD	COORDINATE	HDW.	HARDWARE	PL.	PLATE		
CORR	CORRIDOR	HDWD.	HARDWOOD	P.LAM.	PLASTIC LAMINATE	UGND.	UNDERGROUND
COV	COVER	HGT.	HEIGHT	PLAS.	PLASTER	UNFIN.	UNFINISHED
CP	CONTROL PANEL	H.M.	HOLLOW METAL	PLAT.	PLATFORM	U.N.O.	UNLESS NOTED OTHERWISE
CR	CONDENSATE RETURN	HORIZ.	HORIZONTAL	PLBG	PLUMBING	U.O.S.	UNDERSIDE OF STRUCTURE
CSWK	CASEWORK	HP	HORSEPOWER	PLF	POUNDS PER LINEAR FOOT	UR.	URINAL
CT	CERAMIC TILE	HR.	HOUR	PLYWD.	PLYWOOD	UTIL	UTILITY
CTSK	COUNTERSUNK	HTG.	HEATING	PNL	PANEL		
CTV	CABLE TELEVISION	HTWR	HOT WATER RETURN	POS	POSITIVE	V	VOLT
CW	COLD WATER	HTWS	HOT WATER SUPPLY	PR.	PAIR	VAC	VACUUM
		HVAC	HEATING, VENTILATING, AIR CONDITIONING	PREFAB	PREFABRICATED	VAV	VARIABLE AIR VOLUME
DBL	DOUBLE			PREFIN	PREFINISHED	V.C.T.	VINYL COMPOSITION TILE
DEMO	DEMOLITION	HVY	HEAVY	PRELIM	PRELIMINARY	VERT.	VERTICAL
DEPT	DEPARTMENT	HW	HOT WATER	PROJ	PROJECT	VEST.	VESTIBULE
DET	DETAIL			PSF	POUNDS PER SQUARE FOOT	VFWC	VINYL FABRIC WALL COVERING
DF	DRINKING FOUNTAIN	I.D.	INSIDE DIAMETER	PSG	PAINT SEMI-GLOSS		
DG	DECOMPOSED GRANITE	I.E.	INVERT ELEVATION	PSI	POUNDS PER SQUARE INCH	W	WATT
DIA	DIAMETER	INSUL.	INSULATION	PVC	POLYVINYL CHLORIDE	W/	WITH
DIM	DIMENSION	INT.	INTERIOR			W.C.	WATER CLOSET
DISP.	DISPENSER	INV.	INVERT	Q.T.	QUARRY TILE	WD.	WOOD
DIST.	DISTANCE	IW	IRRIGATION WATER	QTY	QUANTITY	WDW.	WINDOW
DIV.	DIVISION					WHSE	WAREHOUSE
D.L.	DEAD LOAD	JAN.	JANITOR			WL	WIND LOAD
DN.	DOWN	JCT.	JUNCTION			WLD	WELDED
DS.	DOWN SPOUT	JT.	JOINT			WP	WORKING POINT
DWG.	DRAWING					WPG	WATERPROOFING
						WR	WATER RESISTANT
						WSCT.	WAINSCOT
						WT	WEIGHT
						W.W.F.	WELDED WIRE FABRIC
						XFMR	TRANSFORMER

DRAWING LIST

(TOTAL NO. OF DRAWINGS - 55)

GENERAL

(NO. OF DRAWINGS - 3)

T-1 COVER SHEET
T-2 SHEET INDEX, GENERAL NOTES
T-3 FIRE ACCESS SITE PLAN

CIVIL DRAWINGS

(NO. OF DRAWINGS - 4)

C1.1 DEMOLITION PLAN
C1.2 GRADING PLAN
C1.3 DETAIL SHEET
C1.4 SITE UTILITY PLAN

ARCHITECTURAL DRAWINGS

(NO. OF DRAWINGS - 7)

AS-1 OVERALL CAMPUS SITE PLAN
AS-2 OVERALL CAMPUS SITE DEMOLITION PLAN
AS-3 ENLARGED SITE PLAN
A-1 PORTABLE FLOOR PLAN
A-2 RESTROOM PORTABLE FLOOR PLAN
A-3 DETAILS
A-4 DETAILS

ELECTRICAL DRAWINGS

(NO. OF DRAWINGS - 9)

E0.1 GENERAL NOTES, SYMBOL LIST, FIXTURE SCHEDULE AND DETAILS
E0.2 SINGLE LINE DIAGRAM AND DETAILS
E0.3 FIRE ALARM RISER DIAGRAM AND CALCULATIONS
E0.4 TYPICAL MODULAR BUILDING ELECTRICAL PLAN AND DETAILS
E0.5 OUTDOOR TITLE 24
E0.6 POWER DISTRIBUTION TITLE 24
ES.1 OVERALL SITE ELECTRICAL PLAN
ES.2 ENLARGED SITE ELECTRICAL PLAN & FIRE ALARM PLAN
E1.1 ELECTRICAL SPECIFICATIONS

* 24'X40' MODULAR CLASSROOM

(NO. OF DRAWINGS - 21)

MODTECH PC# 04-104801 A# 04-105337

A0.01 COVER SHEET
A1.01 FLOOR PLAN
A2.03 REFLECTED CEILING PLAN
A2.04 REFLECTED CEILING DETAILS
A3.11 ROOF PLAN
A3.13 ROOF PLAN
A4.11 EXTERIOR ELEVATIONS
A4.31 ARCHITECTURAL DETAILS
A5.01 INTERIOR ELEVATIONS
A6.01 SCHEDULES
A6.02 SCHEDULES
A7.01 MISCELLANEOUS OPTIONS
F3.01 FOUNDATION PLAN
F3.11 FOUNDATION DETAILS
S1.01 FLOOR FRAMING PLAN
S2.11 ROOF FRAMING PLAN
S3.11 STRUCTURAL FRAMING
S4.01 WALL FRAMING
S4.02 WALL FRAMING DETAILS
M1.03 MECHANICAL (HVAC) PLAN
E1.03 ELECTRICAL PLAN

* 12'X40' MODULAR RESTROOM

(NO. OF DRAWINGS - 11)

STEELGARD PC# 03-60052 A# 03-115776

A-2 FLOOR PLAN & ELEVATIONS
A-3 WALL SECTIONS
A-4 DETAILS
E-1 ELECTRICAL FLOOR PLAN
S-1 FOUNDATION PLAN
S2 CEILING, FLOOR, & ROOF FRAMING PLAN
S3 ROOF & CEILING DETAILS
S-3A ROOF & CEILING DETAILS
S4 STRUCTURAL DETAILS
S5 STRUCTURAL DETAILS
S6 WALL FRAMING DETAILS

PROJECT DIRECTORY

OWNER
GLENDALE UNIFIED SCHOOL DISTRICT
223 N. JACKSON STREET, 3RD FLOOR
GLENDALE, CA 91206
PHONE NO. - (818) 241-3111

ARCHITECT
tBP/ARCHITECTURE
4611 TELLER AVENUE
NEWPORT BEACH, CA 92660
PHONE NO. - (949) 673-0300
FAX NO. - (949) 732-3895

CIVIL ENGINEER
FPL&ASSOCIATES, INC.
10 CORPORATE PARK
IRVINE, CA 92606
PHONE: (949) 252-1688
FAX: (949) 252-0088

ELECTRICAL ENGINEER
FBA ENGINEERING
3420 IRVINE AVENUE
NEWPORT BEACH, CA 92660
PHONE NO. - (949) 852-9995
FAX NO. - (949) 852-1657

GENERAL NOTES

ALL WORK TO CONFORM TO 2016 EDITION TITLE 24, CALIFORNIA CODE OF REGULATIONS (CCR)

CHANGES TO THE APPROVED DRAWINGS AND SPECIFICATIONS SHALL BE MADE BY ADDENDA OR CONSTRUCTION CHANGE DOCUMENTS APPROVED BY THE DIVISIONS OF THE STATE ARCHITECT, AS REQUIRED BY SECTION 4-338, PART 1, TITLE 24, CCR.

A 'DSA CERTIFIED' PROJECT INSPECTOR EMPLOYED BY THE DISTRICT (OWNER) AND APPROVED BY THE DIVISION OF THE STATE ARCHITECT SHALL PROVIDE CONTINUOUS INSPECTION OF THE WORK. THE DUTIES OF THE INSPECTOR ARE DEFINED IN SECTION 4-342, CALIFORNIA BUILDING STANDARDS ADMINISTRATIVE CODE (PART 1, TITLE 24 CCR). INSPECTOR SHALL HAVE CLASS (4) CERTIFICATION MINIMUM.

A DSA ACCEPTED TESTING LABORATORY DIRECTLY EMPLOYED BY THE SCHOOL BOARD SHALL CONDUCT ALL THE REQUIRED TESTS AND INSPECTIONS FOR THE PROJECT.

GRADING PLANS, DRAINAGE IMPROVEMENT, ROAD AND ENVIRONMENT HEALTH CONSIDERATIONS SHALL COMPLY WITH ALL LOCAL ORDINANCES.

PORTABLE NOTES

THE DESIGN PROFESSIONAL IN RESPONSIBLE CHANGE SHALL SUBMIT A LETTER CERTIFYING THAT THE EXISTING BUILDING CONFORMS THE ORIGINALLY APPROVED PLANS AND SPECIFICATIONS AND HAS NOT SUFFERED STRUCTURAL DETERIORATION OR BEEN STRUCTURALLY ALTERED PER DSA IR 16-1.

THE FOLLOWING DOCUMENTS SHALL BE ON THE JOBSITE PRIOR TO INSTALLATION OF THE UNIT(S):
a. IN-PLANT VERIFIED REPORT
b. LABORATORY VERIFIED REPORT
c. WELDING VERIFIED REPORT
THE SITE INSPECTOR SHALL VERIFY THE ABOVE DOCUMENTS AND SERIAL NUMBERS ARE APPLICABLE TO EACH UNIT PRIOR T INSTALLATION OF THE UNIT(S).

NOTIFY ARCHITECT AND THE DIVISION OF THE STATE ARCHITECT FIELD ENGINEER IF ANY DISCREPANCIES OCCUR.

IN-PLANT INSPECTOR AND MANUFACTURER SHALL FOLLOW THE REQUIREMENTS OF DSA IR16-1.13 AND INCLUDE THE FOLLOWING FORMATION ON ID TAG OF SHOP FABRICATED RE-LOCATABLE STRUCTURES;
1. THE DSA APPLICATION NUMBER AND CBC EDITION UNDER WHICH THE BUILDING CONSTRUCTION WAS AUTHORIZED;
2. THE MANUFACTURER OR BUILDER'S NAME;
3. THE SERIAL NUMBER;
4. THE DESIGN CLIMATE ZONES;
5. THE DESIGN LIVE LOADS FOR THE ROOF AND FLOOR;
6. THE DESIGN WIND SPEED AND EXPOSURE CATAGORY;
7. THE SEISMIC DESIGN PARAMETER Sa.

a. EXISTING ELECTRICAL SERVICE HAS BEEN INVESTIGATED AND FOUND TO HAVE ADEQUATE CAPACITY FOR THE PROPOSED LOAD ADDITION AS SHOWN ON THESE PLANS, OR
b. SOURCE OF POWER HAS BEEN INVESTIGATED AND IS ADEQUATE FOR THE ADDITIONAL LOAD.
c. SITE INSPECTOR IS TO WITNESS AND VERIFY GROUNDING TESTS.

DETERIORATION OR EXISTING NON COMPLAINT CONSTRUCTION - IF ANY CONDITIONS IS DISCOVERED WHICH, IF LEFT UNCORRECTED, WOULD MAKE THE BUILDING NON-COMPLIANT WITH THE REQUIREMENTS OF THE EDITION OF THE CBC IN FORCE AT THE TIME OF ORIGINAL CONSTRUCTION, THE CONDITION MUST BE CORRECTED IN ACCORDANCE WITH CURRENT CODE REQUIREMENT, A CONSTRUCTION CHANGE ORDER (CCD), OR A SEPARATE SET OF PLANS AND SPECIFICATIONS DETAILING AND SPECIFYING THE REQUIRED REPAIR WORK SHALL BE SUBMITTED TO AND APPROVED BY DSA BEFORE PROCEEDING WITH THE REPAIR WORK.

CODE ANALYSIS

OCCUPANCY GROUP: E (K-8)
CONSTRUCTION TYPE: TYPE V-B, NON-SPRINKLERED

ALLOWABLE HEIGHT PER TABLE 504.3
ALLOWABLE NUMBER OF STORIES PER TABLE 504.4

	ALLOWABLE	ACTUAL
NUMBER OF STORIES	1	1
BUILDING HEIGHT	40'-0"	10'-0"

ALLOWABLE AREA PER TABLE 506.2

ALLOWABLE BUILDING AREA	
BASIC ALLOWABLE AREA A(t)	9,500 S.F.
FRONTAGE INCREASE:	NOT USED
SPRINKLER INCREASE:	NOT USED
TOTAL ALLOWABLE AREA A(a)	9,500 S.F.
ACTUAL BUILDING AREA	4,320 S.F.

SUMMARY OF WORK

PROJECT CONSISTS OF THE PLACEMENT OF (4) PORTABLE CLASSROOM BUILDINGS AND (1) ACCESSIBLE RESTROOM PORTABLE BUILDING .

APPLICABLE CODES

APPLICABLE CODES AS OF JANUARY 1, 2017:

2016 BUILDING STANDARDS ADMINISTRATIVE CODE, PART 1, TITLE 24 C.C.R.

2016 CALIFORNIA BUILDING CODE (C.B.C.), PART 2, TITLE 24 C.C.R.
(2012 INTERNATIONAL BUILDING CODE OF THE INTERNATIONAL CODE COUNCIL, WITH CALIFORNIA AMENDMENTS)

2016 CALIFORNIA ELECTRICAL CODE (C.E.C.), PART 3, TITLE 24 C.C.R.
(2011 NATIONAL ELECTRICAL CODE OF THE NATIONAL FIRE PROTECTION ASSOCIATION, NFPA)

2016 CALIFORNIA MECHANICAL CODE (C.M.C.), PART 4, TITLE 24 C.C.R.
(2012 UNIFORM MECHANICAL CODE OF THE INTERNATIONAL ASSOCIATION OF PLUMBING AND MECHANICAL OFFICIALS, IAPMO)

2016 CALIFORNIA PLUMBING CODE (C.P.C.), PART 5, TITLE 24 C.C.R.
(2012 UNIFORM PLUMBING CODE OF THE INTERNATIONAL ASSOCIATION OF PLUMBING AND MECHANICAL OFFICIALS, IAPMO)

2016 CALIFORNIA ENERGY CODE (C.E.C.), PART 6, TITLE 24 C.C.R.

2016 CALIFORNIA HISTORICAL BUILDING CODE, TITLE 24 C.C.R.

2016 CALIFORNIA FIRE CODE (C.F.C.), PART 9, TITLE 24 C.C.R.
(2012 INTERNATIONAL FIRE CODE OF THE INTERNATIONAL CODE COUNCIL)

2016 CALIFORNIA EXISTING BUILDING CODE, TITLE 24 C.C.R.
(2012 INTERNATIONAL EXISTING BUILDING CODE OF THE INTERNATIONAL CODE COUNCIL, WITH AMENDMENTS)

2016 CALIFORNIA GREEN BUILDING STANDARDS CODE (CALGREEN), PART 11, TITLE 24 C.C.R.

2016 CALIFORNIA REFERENCED STANDARDS, PART 12, TITLE 24 C.C.R.

TITLE 8 C.C.R., DIVISION 1, CHAPTERS 4 AND 6, ELEVATOR SAFETY ORDERS
(INCLUDING ASME A17.1-2004, SAFETY CODE FOR ELEVATORS AND ESCALATORS)

TITLE 19 C.C.R., PUBLIC SAFETY, STATE FIRE MARSHAL REGULATIONS

PARTIAL LIST OF APPLICABLE STANDARDS

2016 CALIFORNIA BUILDING CODE (FOR SFM) REFERENCED STANDARDS CHAPTER 35

NFPA 13	AUTOMATIC SPRINKLER SYSTEM (CALIFORNIA AMENDED)	2016 EDITION
NFPA 14	STANDPIPE SYSTEMS (CALIFORNIA AMENDED)	2016 EDITION
NFPA 17	DRY CHEMICAL EXTINGUISHING SYSTEMS	2016 EDITION
NFPA 17A	WET CHEMICAL EXTINGUISHING SYSTEMS	2016 EDITION
NFPA 20	STATIONARY PUMPS	2016 EDITION
NFPA 24	PRIVATE FIRE SERVICE MAINS (CALIFORNIA AMENDED)	2016 EDITION
NFPA 72	NATIONAL FIRE ALARM AND SIGNALING CODE (CALIFORNIA AMENDED) (NOTE: SEE UL STANDARD 1971 FOR "VISUAL DEVICES")	2016 EDITION
NFPA 80	FIRE DOOR AND OTHER OPENING PROTECTIVE	2016 EDITION
NFPA 253	CRITICAL RADIANT FLUX OF FLOOR COVERING SYSTEMS	2006 EDITION
NFPA 2001	CLEAN AGENT FIRE EXTINGUISHING SYSTEMS (CALIFORNIA AMENDED)	2016 EDITION

EXISTING MODULAR BUILDING INFORMATION

CLASSROOM #	SIZE	MANUFACTURER	SERIAL NO.	STOCKPILE DSA NO.	SITE DSA NO.	RELOCATED FROM
1	24' x 40'	MODTECH	47411	04-104801	04-105337	
2	24' x 40'	MODTECH	47412	04-104801	04-105337	
3	24' x 40'	MODTECH	47415	04-104801	04-105337	
4	24' x 40'	MODTECH	47417	04-104801	04-105337	
5	12' x 40'	STEELGARD	13052	03-60052	03-115776	FRANKLIN

CODE ANALYSIS LEGEND

AREA
OCCUPANT LOAD FACTOR
960 SF | 20
48
OCCUPANT LOAD SYMBOL
NUMBER OF OCCUPANTS
72
NUMBER OF OCCUPANTS EXITING
ASSUMED LOT LINE

WIND DESIGN DATA

2016 CBC 1603.1.4
1. ULTIMATE DESIGN WIND SPEED V =115
2. RISK CATEGORY III
3. WIND EXPOSURE CATEGORY C
4. INTERNAL PRESSURE COEFFICIENT -0.18
5. ENCLOSURE CLASSIFICATION ENCLOSED BLDG (PORTABLE/RELOCATABLE)

EARTHQUAKE DESIGN DATA

2016 CBC 1603.1.5
SITE COORDINATES: 34.240°N, 118.257°W
1. RISK CATEGORY: III
2. SEISMIC IMPORTANCE FACTOR: 1.25
3. MAPPED SPECTRAL RESPONSE ACCELERATION PARAMETERS
Ss = 1.965 g S1= 0.735 g
4. SITE CLASS: D
5. DESIGN SPECTRAL RESPONSE ACCELERATION PARAMETERS
SDS= 1.572 g SD1= 0.833 g

GEOTECHNICAL INFORMATION

1. ALLOWABLE SOIL BEARING PRESSURE = 1500 PSF

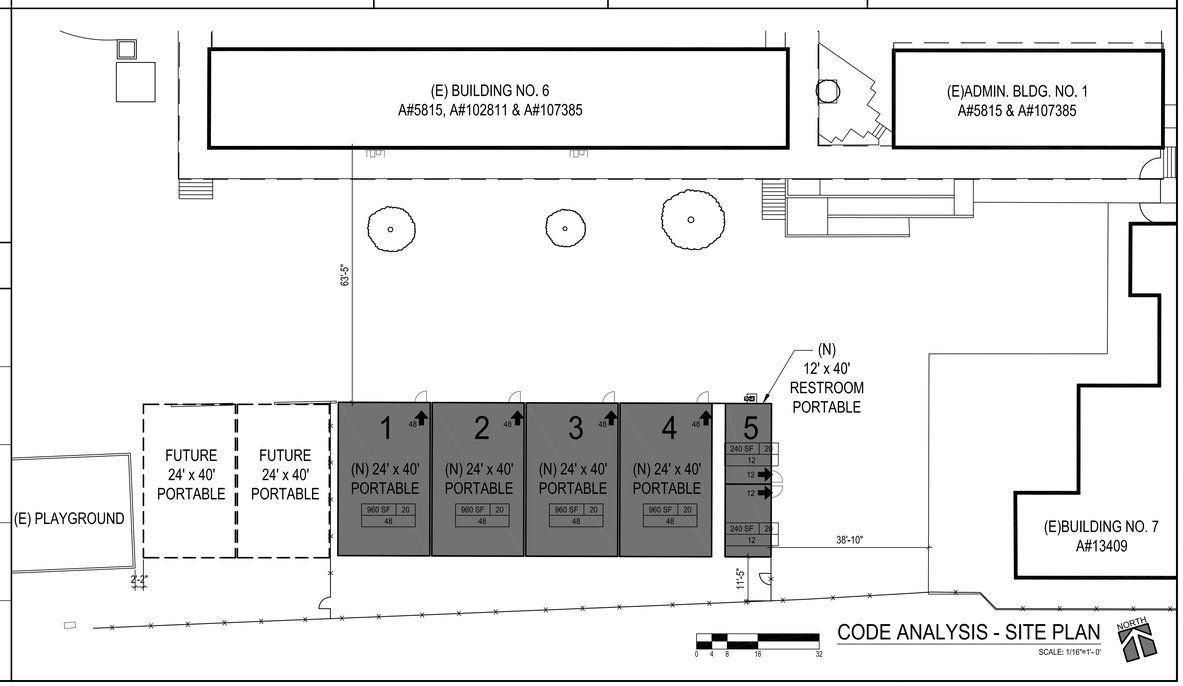

CODE ANALYSIS - SITE PLAN
SCALE: 1/16"=1'- 0"

REFERENCE SYMBOLS

FULL BUILDING SECTION
A / A-4 — LETTER ABOVE - SECTION; NUMBER BELOW - SHEET NUMBER

PARTIAL BUILDING SECTION / WALL SECTION
B / A-4 — LETTER ABOVE - SECTION; NUMBER BELOW - SHEET NUMBER

EXTERIOR ELEVATION
1 / A-3 — NUMBER ABOVE - ELEVATION NUMBER; NUMBER BELOW - SHEET NUMBER

DETAIL
2 / 3.01 — NUMBER ABOVE - DETAIL NUMBER; NUMBER BELOW - SHEET NUMBER

MATERIAL SYMBOLS

EARTH
SAND & GROUT
CONCRETE
MASONRY
STEEL
PLYWOOD
FINISH WOOD
LATH & PLASTER
GYPSUM BOARD
BATT INSULATION
RIGID INSULATION
ACOUSTICAL CEILING PANEL/ TILE

Statement of General Conformance

(Application No. _____File No._____)

☒ The drawings or sheets listed on the cover or index sheet [marked by asterisk (*)]
☐ This drawing, page of specifications/calculations

have been prepared by other design professionals or consultants who are licensed and/or authorized to prepare such drawings in this state. It has been examined by me for:

1) design intent and appears to meet the appropriate requirements of Title 24, California Code of Regulations and the project specifications prepared by me, and

2) coordination with my plans and specifications and is acceptable for incorporation into the construction of this project.

This Statement of General Conformance "shall not be construed as relieving me of my rights, duties, and responsibilities under Sections 17302 and 81138 of the Education Code and Sections 4-336, 4-341 and 4-344" of Title 24, Part 1. (Title 24, Part 1, Section 4-317 (b))

I find that: ☒ All drawings or sheets listed on the cover or index sheet ☐ This drawing or page

☒ Is/are in general conformance with the project design, and ☒ has/have been coordinated with the project plans and specifications.	☐ Is/are in general conformance with the project design intent, and ☐ has/have been coordinated with the project plans and specifications.
Signature / Date	Signature / Date
Architect or Engineer designated to be in general responsible charge	Architect or Engineer delegated responsibility for this portion of the work
HUNG L. CHENG	
Print Name	Print Name
C 34187 / 4-30-19	
License Number / Expiration Date	License Number / Expiration Date

tBP/Architecture
4611 Teller Avenue
Newport Beach, CA 92660
ph: 949.673.0300 fx: 949.732.3895

architect

consultant

FILE NO.:
IDENTIFICATION STAMP
DIVISION OF THE STATE ARCHITECT
DEPARTMENT OF GENERAL SERVICES
AC _____ FLS _____ SS _____
DATE _____

DEPARTMENT OF GENERAL SERVICES
DSA Los Angeles Regional Office
700 N. Alameda Street, Suite 5-500
Los Angeles, California 90012
ph: (213)897-3995 fx: (213)897-3159/0726

DUNSMORE ELEMENTARY SCHOOL RELOCATABLE CLASSROOMS

GLENDALE UNIFIED SCHOOL DISTRICT
4717 DUNSMORE AVE.
LA CRESCENTA, CA 91214

owner

tBP project number : 20967.00
file name:
drawn by: checked by:
date: April 21, 2017

Rev: date: description:

THIS DRAWING AND THE DESIGNS, DEPICTIONS, IDEAS AND OTHER INFORMATION CONTAINED HEREIN CONSTITUTE UNPUBLISHED WORK OF tBP/ARCHITECTURE AND SHALL REMAIN THE PROPERTY OF tBP/ARCHITECTURE IN PERPETUITY. NO PART THEREOF SHALL BE REPRODUCED, DISCLOSED, DISTRIBUTED, SOLD, PUBLISHED OR OTHERWISE USED IN ANY WAY WITHOUT THE ADVANCED EXPRESS WRITTEN CONSENT OF tBP/ARCHITECTURE.

drawing title:
INDEX SHEET

drawing no.:
T-2
drawing of

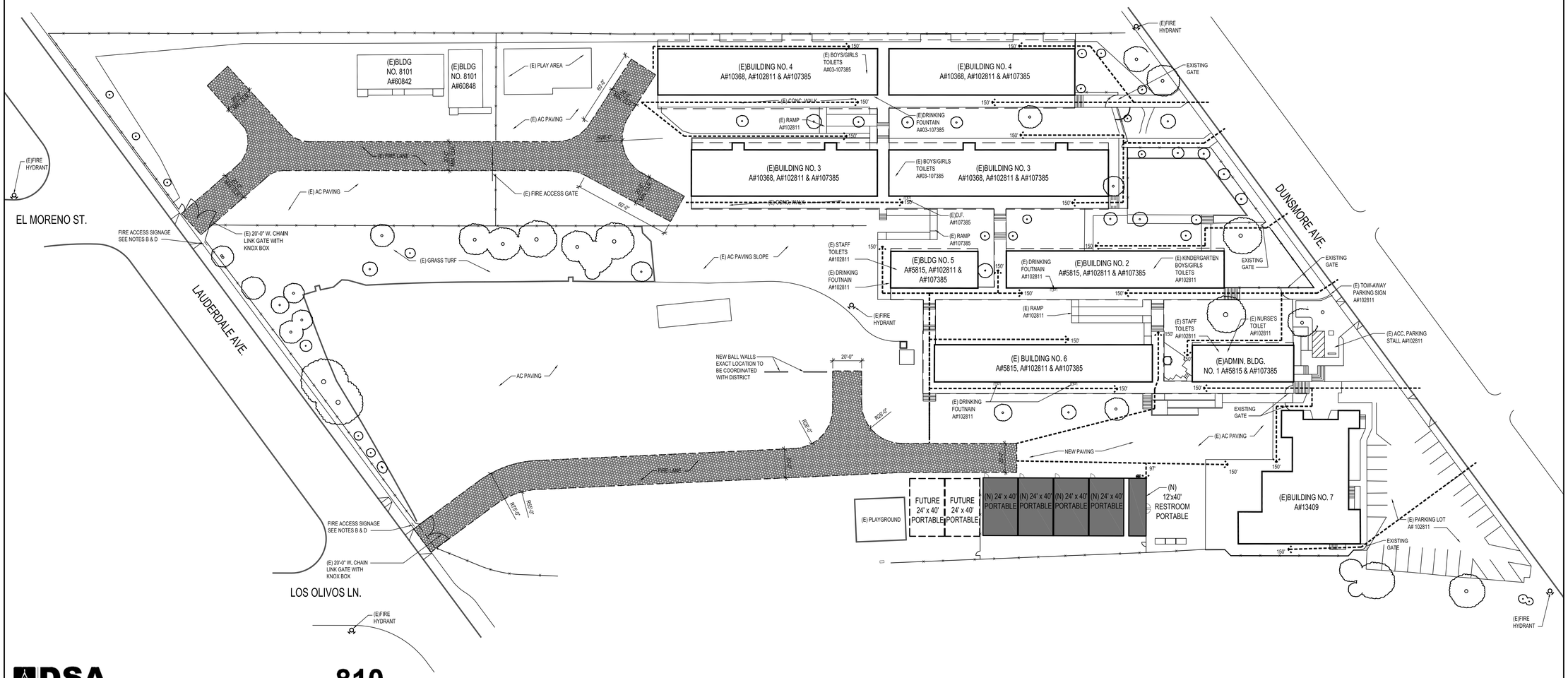

DSA 810

LOCAL FIRE AUTHORITY REVIEW

To facilitate the Division of the State Architect's (DSA) approval of the Fire/Life Safety portion of a project, DSA requires Local Fire Authority (LFA) review of certain elements as identified in this form. Use of this form is mandatory for projects that add square footage to a campus or if any item on this form is relevant to the project. For additional information, see DSA 810 Instructions and DSA Policy 09-01.

PROJECT INFORMATION	
School District/Owner:	Glendale Unified School District
Project Name/School:	Dunsmore Elementary
Project Address:	4717 Dunsmore Ave., La Crescenta, CA 91214

LOCAL FIRE AUTHORITY (LFA)		
LFA Agency Name:		
LFA Reviewer Name:	Title:	
Email:	Telephone Number:	

I have reviewed and responded to the applicable items for this project as listed below.
***Note:** Only sign this form when it is imaged onto the site plan. A loose form is not acceptable to DSA.*

LFA Reviewer's Signature: _____ **Date:** _____

Review Key: **"Y"** = Complies with LFA requirements **"N"** = Not approved (complete Section 8)
"NA" = Not applicable to the project **"NR"** = LFA elects not to review

	Description	Y	N	NA	NR
1	Where an elevator does not meet medical emergency service cab size, per the California Building Code (CBC), use of stairways for emergency rescue and patient transport is acceptable.				
2	Access roads, fire lane markings, pavers and gate entrances are in accordance with Title 19, California Code of Regulations and the California Fire Code, Chapter 5.				
3	Fire hydrant location and distribution complies with the California Fire Code (or see # 4).				
4	Fire hydrant location and distribution complies with NFPA 1142, "Alternate Means." If "NR" is checked, DSA can only approve on-site water storage as an alternate. The signature of the school district official is required to acknowledge the use of alternate means. **Signature of School District Official:** _____ **Date:** _____ **Print the School District Official's Name:** _____				
5	The location(s) of the proposed post indicator valve and fire department connection meet the requirements of this jurisdiction.				
6	The location(s) of the detector check valve assembly meet the requirements of this jurisdiction.				
7	Is the project located in a hazard severity zone area? (CBC, Chapter 7A, Section 701A.) ☐ Yes ☐ No Check type if "Yes": ☐ Moderate ☐ High ☐ Very High ☐ WIFA (If one of these boxes is checked, the project design must meet the requirements of Chapter 7A.)				
8	COMMENTS (note deficiencies):				

BUILDING DESCRIPTION

TOTAL BUILDING AREAS:	4320 SF
BUILDING HEIGHT:	10'-0" HIGH
BUILDING USE:	E OCCUPANCY
CONSTRUCTION TYPE:	TYPE V-B, NON-SPRINKLERED

FIRE FLOW ANALYSIS

2016 CALIFORNIA FIRE CODE TABLE B105.1 - MIN. REQUIRED FIRE FLOW AND FLOW DURATION FOR BUILDINGS

FIRE AREA TYPE V-B	FIRE FLOW (GPM)	FLOW DURATION (HOURS)		
4,320 S.F.	1,750	2		

SITE PLAN LEGEND

EXISTING FIRE DEPARTMENT VEHICULAR ACCESS LANE 20'-0" MINIMUM UNOBSTRUCTED WIDTH

FIREFIGHTER ACCESS WALKWAY 5'-0" MINIMUM CLEAR WIDTH

(E) FH EXISTING FIRE HYDRANT

APPLICABLE CODES

APPLICABLE CODES AS OF JANUARY 1, 2017:

2016 BUILDING STANDARDS ADMINISTRATIVE CODE, PART 1, TITLE 24 C.C.R.

2016 CALIFORNIA BUILDING CODE (C.B.C.), PART 2, TITLE 24 C.C.R. (2012 INTERNATIONAL BUILDING CODE OF THE INTERNATIONAL CODE COUNCIL, WITH CALIFORNIA AMENDMENTS)

2016 CALIFORNIA ELECTRICAL CODE (C.E.C.), PART 3, TITLE 24 C.C.R. (2011 NATIONAL ELECTRICAL CODE OF THE NATIONAL FIRE PROTECTION ASSOCIATION, NFPA)

2016 CALIFORNIA MECHANICAL CODE (C.M.C.), PART 4, TITLE 24 C.C.R. (2012 UNIFORM MECHANICAL CODE OF THE INTERNATIONAL ASSOCIATION OF PLUMBING AND MECHANICAL OFFICIALS, IAPMO)

2016 CALIFORNIA PLUMBING CODE (C.P.C.), PART 5, TITLE 24 C.C.R. (2012 UNIFORM PLUMBING CODE OF THE INTERNATIONAL ASSOCIATION OF PLUMBING AND MECHANICAL OFFICIALS, IAPMO)

2016 CALIFORNIA ENERGY CODE (C.E.C.), PART 6, TITLE 24 C.C.R.

2016 CALIFORNIA HISTORICAL BUILDING CODE, TITLE 24 C.C.R.

2016 CALIFORNIA FIRE CODE (C.F.C.), PART 9, TITLE 24 C.C.R. (2012 INTERNATIONAL FIRE CODE OF THE INTERNATIONAL CODE COUNCIL)

2016 CALIFORNIA EXISTING BUILDING CODE, TITLE 24 C.C.R. (2012 INTERNATIONAL EXISTING BUILDING CODE OF THE INTERNATIONAL CODE COUNCIL, WITH AMENDMENTS)

2016 CALIFORNIA GREEN BUILDING STANDARDS CODE (CALGREEN), PART 11, TITLE 24 C.C.R.

2016 CALIFORNIA REFERENCED STANDARDS, PART 12, TITLE 24 C.C.R.

TITLE 8 C.C.R., DIVISION 1, CHAPTERS 4 AND 6, ELEVATOR SAFETY ORDERS (INCLUDING ASME A17.1-2004, SAFETY CODE FOR ELEVATORS AND ESCALATORS)

TITLE 19 C.C.R., PUBLIC SAFETY, STATE FIRE MARSHAL REGULATIONS

FIRE DEPARTMENT NOTES

A. DOUBLE CHECK DETECTOR - OBTAIN APPROVAL FROM THE CITY OF GLENDALE WATER AND POWER DEPARTMENT FOR ANY PROPOSED DOUBLE CHECK DETECTORS (BACKFLOW PREVENTERS) WITHIN 60 DAYS. THE PROPOSED DDC MODEL MUST BE APPROVED BY THE G.W.P.

B. FIRE DEPARTMENT ACCESS SIGNAGE MAP - PLANS SHOWING THE FIRE DEPARTMENT ACCESS SIGNAGE MAP DETAILS SHALL BE SUBMITTED TO THE GLENDALE FIRE DEPT. FOR APPROVAL WITHIN 60 DAYS. THE SIGNAGE SHALL BE WEATHER RESISTANT AND OF AN APPROVED SIZE, AND SHALL SHOW THE FOLLOWING INFORMATION:
1. BUILDINGS AND BUILDING IDENTIFICATION
2. FIRE ACCESS ROAD(S)
3. APPROVED ACCESS WALKWAYS LEADING FROM FIRE APPARATUS ACCESS ROADS TO EXTERIOR OPENINGS
4. FIRE HYDRANTS
5. KNOX BOXES
6. FENCES AND GATES (VEHICLE AND PERSON GATES
7. FIRE DEPARTMENT CONNECTION
8. DOUBLE DETECTOR CHECK
9. OTHER INFORMATION PERTINENT TO FIRE DEPARTMENT ACCESS

C. SIGNAGE DURING AND AFTER CONSTRUCTION: THE FIRE DEPARTMENT ACCESS SIGNAGE SHALL BE INSTALLED PRIOR TO THE NEW BUILDING CONSTRUCTION COMMENCING TO FACILITATE FIRE DEPARTMENT ACCESS DURING CONSTRUCTION. THIS SIGNAGE SHALL ALSO REMAIN IN PLACE UPON COMPLETION OF CONSTRUCTION AND SHALL BE UPDATED AS NEEDED TO FACILITATE FIRE DEPARTMENT ACCESS.

D. ACCESS DURING CONSTRUCTION: FIRE APPARATUS ACCESS ROADS AND WATER SUPPLY FOR FIRE PROTECTION SHALL BE INSTALLED AND MADE SERVICEABLE PRIOR TO AND DURING THE TIME OF CONSTRUCTION EXCEPT WHEN APPROVED ALTERNATIVE METHODS OF PROTECTION ARE PROVIDED. (SEE CFC SECTION 501.4)

E. KNOX BOX - THE MOUNTING HEIGHT FOR THE KNOX BOX SHALL NOT EXCEED 6'-0" ABOVE THE GROUND LEVEL / FINISHED FLOOR. PROVIDE (3) SETS OF KEYS (WITH PERMANENT ENGRAVED IDENTIFICATION) FOR ALL EXTERIOR DOORS, GATES AND FIRE ALARM PANEL AND OTHERS AS DIRECTED BY THE FIRE INSPECTOR. KNOX BOXES SHALL BE PURCHASED PRIOR TO THE BEGINNING OF CONSTRUCTION, AND INSTALLED IN APPROVED LOCATION FOR THE DURATION OF THE CONSTRUCTION.

F. ADDRESS NUMBERS: APPROVED ADDRESS NUMBERS, BUILDING NUMBERS OR APPROVED BUILDING IDENTIFICATION SHALL BE PLACED IN A POSITION THAT IS PLAINLY LEGIBLE AND VISIBLE FROM THE STREET, ROAD, ALLEY AND WALKWAYS GIVING ACCESS TO AND WITHIN THE PROPERTY. THESE NUMBERS SHALL CONTRAST WITH THEIR BACKGROUND. ADDRESS NUMBERS SHALL BE ARABIC NUMERALS OR ALPHABET LETTERS. NUMBERS SHALL BE A MIN. OF 4-INCHES (102 MM) HIGH W/ MIN. STROKE WIDTH 0.5 INCH (12.7 MM) AND SHALL BE ILLUMINATED IN AN APPROVED MANNER (IF NOS. ARE ON THE EXTERIOR). NUMBER HEIGHT AND STROKE WIDTH SHALL BE INCREASED AS NEEDED FOR LEGIBILITY BASED ON VISIBILITY DISTANCE.

G. KEY BOX MAINTENANCE - THE OPERATOR OF THE BUILDING SHALL IMMEDIATELY NOTIFY THE FIRE CODE OFFICIAL AND PROVIDE THE NEW KEY WHEN A LOCK IS CHANGED OR REKEYED. THE KEY TO SUCH LOCK SHALL BE SECURED IN THE KEY BOX. (SEE CFC SECTION 506.2)

CONSTRUCTION OF GATES SHALL BE OF MATERIALS THAT ALLOW MANUAL OPERATION BY ONE PERSON. (SEE CFC APPENDIX D, D103.5 CRITERIA 3)

CONSTRUCTION OF FIRE LINE REPLACEMENT BETWEEN LAS CRESCENTA AVENUE AND FIRE HYDRANT NO. 1 IS TO BE COMPLETED PRIOR TO THE OCCUPANCY AND USAGE OF THE INTERIM HOUSING PROJECT.

FIRE DEPARTMENT VEHICULAR ACCESS ROADS MUST BE INSTALLED AND MAINTAINED IN A SERVICEABLE MANNER PRIOR TO AND DURING THE TIME OF CONSTRUCTION. (FIRE CODE 501.4)

FIRE DEPARTMENT VEHICULAR ACCESS ROADS SHALL BE HARD SCAPE ALL WEATHER ACCESS IN ACCORDANCE WITH THE DEPARTMENT'S ALL WEATHER ACCESS REQUIREMENTS. (LOS ANGELES COUNTY FIRE CODE 503.2.3)

ALL FIRE HYDRANTS SHALL MEASURE 6" x 4" x 2 1/2", BRASS OR BRONZE, CONFORMING TO AMERICAN WATER WORKS ASSOCIATION STANDARD C503, OR APPROVED EQUAL, AND SHALL BE INSTALLED IN COMPLIANCE WITH THE COUNTY OF LOS ANGELES FIRE DEPARTMENT REGULATION 8. (FIRE CODE 507.5 AND REGULATION 8)

REQUIRED INSPECTIONS

A. UNDERGROUND FLUSH / ROUGH / HYDRO OF PIPE FROM CITY MAIN TO BACKFLOW PREVENTER - CALL GLENDALE WATER AND POWER TO SCHEDULE AND OBTAIN INSPECTION OF FLUSH PRIOR TO COVERING PIPE.

B. GLENDALE FIRE PREVENTION FINAL INSPECTION (PRIOR TO OCCUPANCY) - TO VERIFY INSTALLATION OF ADEQUATE FIRE DEPARTMENT ACCESS AND SIGNAGE, AS INDICATED ON THIS PLAN, CONTACT THE GLENDALE FIRE DEPARTMENT AT (818)548-4810 TO SCHEDULE A SITE VISIT AND INSPECTION PRIOR TO OCCUPANCY.

SCOPE OF WORK

PROJECT CONSISTS OF THE PLACEMENT OF (4) PORTABLE CLASSROOM BUILDINGS AND (1) ACCESSIBLE RESTROOM PORTABLE BUILDING .

tBP architecture planning interiors
tBP/Architecture
4611 Teller Avenue
Newport Beach, CA 92660
ph: 949.673.0300 fx: 949.732.3895
architect

consultant

FILE NO.:
IDENTIFICATION STAMP
DIVISION OF THE STATE ARCHITECT
DEPARTMENT OF GENERAL SERVICES
AC ____ FLS ____ SS ____
DATE ____

DEPARTMENT OF GENERAL SERVICES
DSA Los Angeles Regional Office
700 N. Alameda Street, Suite 5-500
Los Angeles, California 90012
ph: (213)897-3995 fx: (213)897-3159/0726

DUNSMORE ELEMENTARY SCHOOL RELOCATABLE CLASSROOMS

GLENDALE UNIFIED SCHOOL DISTRICT
4717 DUNSMORE AVE.
LA CRESCENTA, CA 91214

owner

tBP project number : 20967.00
file name:
drawn by: checked by:
date: April 21, 2017

Rev:	date:	description:

THIS DRAWING AND THE DESIGNS, DEPICTIONS, IDEAS AND OTHER INFORMATION CONTAINED HEREIN CONSTITUTE UNPUBLISHED WORK OF tBP/ARCHITECTURE AND SHALL REMAIN THE PROPERTY OF tBP/ARCHITECTURE IN PERPETUITY. NO PART THEREOF SHALL BE REPRODUCED, DISCLOSED, DISTRIBUTED, SOLD, PUBLISHED OR OTHERWISE USED IN ANY WAY WITHOUT THE ADVANCED EXPRESS WRITTEN CONSENT OF tBP/ARCHITECTURE.

drawing title:
FIRE ACCESS SITE PLAN

drawing no.:
T-3
drawing of

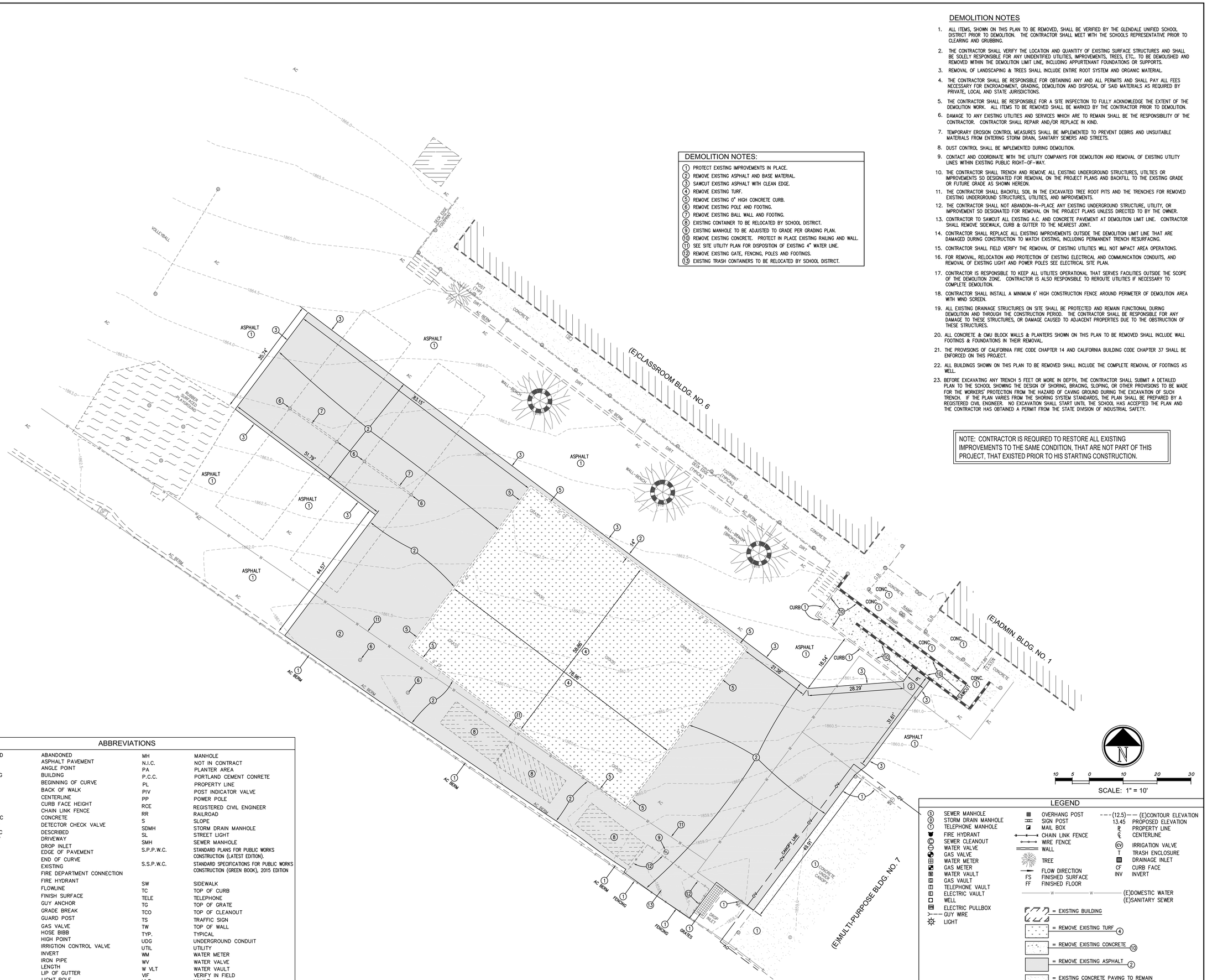

DEMOLITION NOTES

1. ALL ITEMS, SHOWN ON THIS PLAN TO BE REMOVED, SHALL BE VERIFIED BY THE GLENDALE UNIFIED SCHOOL DISTRICT PRIOR TO DEMOLITION. THE CONTRACTOR SHALL MEET WITH THE SCHOOLS REPRESENTATIVE PRIOR TO CLEARING AND GRUBBING.
2. THE CONTRACTOR SHALL VERIFY THE LOCATION AND QUANTITY OF EXISTING SURFACE STRUCTURES AND SHALL BE SOLELY RESPONSIBLE FOR ANY UNIDENTIFIED UTILITIES, IMPROVEMENTS, TREES, ETC,. TO BE DEMOLISHED AND REMOVED WITHIN THE DEMOLITION LIMIT LINE, INCLUDING APPURTENANT FOUNDATIONS OR SUPPORTS.
3. REMOVAL OF LANDSCAPING & TREES SHALL INCLUDE ENTIRE ROOT SYSTEM AND ORGANIC MATERIAL.
4. THE CONTRACTOR SHALL BE RESPONSIBLE FOR OBTAINING ANY AND ALL PERMITS AND SHALL PAY ALL FEES NECESSARY FOR ENCROACHMENT, GRADING, DEMOLITION AND DISPOSAL OF SAID MATERIALS AS REQUIRED BY PRIVATE, LOCAL AND STATE JURISDICTIONS.
5. THE CONTRACTOR SHALL BE RESPONSIBLE FOR A SITE INSPECTION TO FULLY ACKNOWLEDGE THE EXTENT OF THE DEMOLITION WORK. ALL ITEMS TO BE REMOVED SHALL BE MARKED BY THE CONTRACTOR PRIOR TO DEMOLITION.
6. DAMAGE TO ANY EXISTING UTILITIES AND SERVICES WHICH ARE TO REMAIN SHALL BE THE RESPONSIBILITY OF THE CONTRACTOR. CONTRACTOR SHALL REPAIR AND/OR REPLACE IN KIND.
7. TEMPORARY EROSION CONTROL MEASURES SHALL BE IMPLEMENTED TO PREVENT DEBRIS AND UNSUITABLE MATERIALS FROM ENTERING STORM DRAIN, SANITARY SEWERS AND STREETS.
8. DUST CONTROL SHALL BE IMPLEMENTED DURING DEMOLITION.
9. CONTACT AND COORDINATE WITH THE UTILITY COMPANYS FOR DEMOLITION AND REMOVAL OF EXISTING UTILITY LINES WITHIN EXISTING PUBLIC RIGHT-OF-WAY.
10. THE CONTRACTOR SHALL TRENCH AND REMOVE ALL EXISTING UNDERGROUND STRUCTURES, UTILTIES OR IMPROVEMENTS SO DESIGNATED FOR REMOVAL ON THE PROJECT PLANS AND BACKFILL TO THE EXISTING GRADE OR FUTURE GRADE AS SHOWN HEREON.
11. THE CONTRACTOR SHALL BACKFILL SOIL IN THE EXCAVATED TREE ROOT PITS AND THE TRENCHES FOR REMOVED EXISTING UNDERGROUND STRUCTURES, UTILITIES, AND IMPROVEMENTS.
12. THE CONTRACTOR SHALL NOT ABANDON-IN-PLACE ANY EXISTING UNDERGROUND STRUCTURE, UTILITY, OR IMPROVEMENT SO DESIGNATED FOR REMOVAL ON THE PROJECT PLANS UNLESS DIRECTED TO BY THE OWNER.
13. CONTRACTOR TO SAWCUT ALL EXISTING A.C. AND CONCRETE PAVEMENT AT DEMOLITION LIMIT LINE. CONTRACTOR SHALL REMOVE SIDEWALK, CURB & GUTTER TO THE NEAREST JOINT.
14. CONTRACTOR SHALL REPLACE ALL EXISTING IMPROVEMENTS OUTSIDE THE DEMOLITION LIMIT LINE THAT ARE DAMAGED DURING CONSTRUCTION TO MATCH EXISTING, INCLUDING PERMANENT TRENCH RESURFACING.
15. CONTRACTOR SHALL FIELD VERIFY THE REMOVAL OF EXISTING UTILITIES WILL NOT IMPACT AREA OPERATIONS.
16. FOR REMOVAL, RELOCATION AND PROTECTION OF EXISTING ELECTRICAL AND COMMUNICATION CONDUITS, AND REMOVAL OF EXISTING LIGHT AND POWER POLES SEE ELECTRICAL SITE PLAN.
17. CONTRACTOR IS RESPONSIBLE TO KEEP ALL UTILITES OPERATIONAL THAT SERVES FACILITIES OUTSIDE THE SCOPE OF THE DEMOLITION ZONE. CONTRACTOR IS ALSO RESPONSIBLE TO REROUTE UTILITIES IF NECESSARY TO COMPLETE DEMOLITION.
18. CONTRACTOR SHALL INSTALL A MINIMUM 6' HIGH CONSTRUCTION FENCE AROUND PERIMETER OF DEMOLITION AREA WITH WIND SCREEN.
19. ALL EXISTING DRAINAGE STRUCTURES ON SITE SHALL BE PROTECTED AND REMAIN FUNCTIONAL DURING DEMOLITION AND THROUGH THE CONSTRUCTION PERIOD. THE CONTRACTOR SHALL BE RESPONSIBLE FOR ANY DAMAGE TO THESE STRUCTURES, OR DAMAGE CAUSED TO ADJACENT PROPERTIES DUE TO THE OBSTRUCTION OF THESE STRUCTURES.
20. ALL CONCRETE & CMU BLOCK WALLS & PLANTERS SHOWN ON THIS PLAN TO BE REMOVED SHALL INCLUDE WALL FOOTINGS & FOUNDATIONS IN THEIR REMOVAL.
21. THE PROVISIONS OF CALIFORNIA FIRE CODE CHAPTER 14 AND CALIFORNIA BUILDING CODE CHAPTER 37 SHALL BE ENFORCED ON THIS PROJECT.
22. ALL BUILDINGS SHOWN ON THIS PLAN TO BE REMOVED SHALL INCLUDE THE COMPLETE REMOVAL OF FOOTINGS AS WELL.
23. BEFORE EXCAVATING ANY TRENCH 5 FEET OR MORE IN DEPTH, THE CONTRACTOR SHALL SUBMIT A DETAILED PLAN TO THE SCHOOL SHOWING THE DESIGN OF SHORING, BRACING, SLOPING, OR OTHER PROVISIONS TO BE MADE FOR THE WORKERS' PROTECTION FROM THE HAZARD OF CAVING GROUND DURING THE EXCAVATION OF SUCH TRENCH. IF THE PLAN VARIES FROM THE SHORING SYSTEM STANDARDS, THE PLAN SHALL BE PREPARED BY A REGISTERED CIVIL ENGINEER. NO EXCAVATION SHALL START UNTIL THE SCHOOL HAS ACCEPTED THE PLAN AND THE CONTRACTOR HAS OBTAINED A PERMIT FROM THE STATE DIVISION OF INDUSTRIAL SAFETY.

NOTE: CONTRACTOR IS REQUIRED TO RESTORE ALL EXISTING IMPROVEMENTS TO THE SAME CONDITION, THAT ARE NOT PART OF THIS PROJECT, THAT EXISTED PRIOR TO HIS STARTING CONSTRUCTION.

ABBREVIATIONS

ABND	ABANDONED	MH	MANHOLE
AC	ASPHALT PAVEMENT	N.I.C.	NOT IN CONTRACT
AP	ANGLE POINT	PA	PLANTER AREA
BLDG	BUILDING	P.C.C.	PORTLAND CEMENT CONRETE
BC	BEGINNING OF CURVE	PL	PROPERTY LINE
BW	BACK OF WALK	PIV	POST INDICATOR VALVE
CL	CENTERLINE	PP	POWER POLE
CF	CURB FACE HEIGHT	RCE	REGISTERED CIVIL ENGINEER
CLF	CHAIN LINK FENCE	RR	RAILROAD
CONC	CONCRETE	S	SLOPE
DCV	DETECTOR CHECK VALVE	SDMH	STORM DRAIN MANHOLE
DESC	DESCRIBED	SL	STREET LIGHT
D/W	DRIVEWAY	SMH	SEWER MANHOLE
DI	DROP INLET	S.P.P.W.C.	STANDARD PLANS FOR PUBLIC WORKS CONSTRUCTION (LATEST EDITION).
EP	EDGE OF PAVEMENT		
EC	END OF CURVE	S.S.P.W.C.	STANDARD SPECIFICATIONS FOR PUBLIC WORKS CONSTRUCTION (GREEN BOOK), 2015 EDITION
EX	EXISTING		
FDC	FIRE DEPARTMENT CONNECTION		
FH	FIRE HYDRANT	SW	SIDEWALK
FL	FLOWLINE	TC	TOP OF CURB
FS	FINISH SURFACE	TELE	TELEPHONE
GA	GUY ANCHOR	TG	TOP OF GRATE
GB	GRADE BREAK	TCO	TOP OF CLEANOUT
GP	GUARD POST	TS	TRAFFIC SIGN
GV	GAS VALVE	TW	TOP OF WALL
HB	HOSE BIBB	TYP.	TYPICAL
HP	HIGH POINT	UDG	UNDERGROUND CONDUIT
ICV	IRRIGTION CONTROL VALVE	UTIL	UTILITY
INV	INVERT	WM	WATER METER
IP	IRON PIPE	WV	WATER VALVE
L	LENGTH	W VLT	WATER VAULT
LIP	LIP OF GUTTER	VIF	VERIFY IN FIELD
LP	LIGHT POLE	VLT	VAULT
L T & T	LEAD TACK AND TAG		

LEGEND

- SEWER MANHOLE
- STORM DRAIN MANHOLE
- TELEPHONE MANHOLE
- FIRE HYDRANT
- SEWER CLEANOUT
- WATER VALVE
- GAS VALVE
- WATER METER
- GAS METER
- WATER VAULT
- GAS VAULT
- TELEPHONE VAULT
- ELECTRIC VAULT
- WELL
- ELECTRIC PULLBOX
- GUY WIRE
- LIGHT
- OVERHANG POST
- SIGN POST
- MAIL BOX
- CHAIN LINK FENCE
- WIRE FENCE
- WALL
- TREE
- FLOW DIRECTION
- FS FINISHED SURFACE
- FF FINISHED FLOOR
- (12.5) (E)CONTOUR ELEVATION
- 13.45 PROPOSED ELEVATION
- PROPERTY LINE
- CENTERLINE
- ICV IRRIGATION VALVE
- T TRASH ENCLOSURE
- DRAINAGE INLET
- CF CURB FACE
- INV INVERT
- W (E)DOMESTIC WATER
- W (E)SANITARY SEWER
- = EXISTING BUILDING
- = REMOVE EXISTING TURF (4)
- = REMOVE EXISTING CONCRETE (10)
- = REMOVE EXISTING ASPHALT (2)
- = EXISTING CONCRETE PAVING TO REMAIN

tBP architecture planning interiors

LICENSED ARCHITECT ALAN WING-CHI LEE No. C34971 EXP. 09-30-17 STATE OF CALIFORNIA

tBP/Architecture
4611 Teller Avenue
Newport Beach, CA 92660
ph: 949.673.0300 fx: 949.732.3895

architect

PLANS PREPARED BY:
FPL FPL and Associates, Inc.
Traffic • Transportation • Civil
30 Corporate Park, Suite 401
Irvine, CA 92606
PHONE: 949-252-1688

REGISTERED PROFESSIONAL ENGINEER ALAN WING-CHI LEE No. C 34971 Ex. 09-30-17 CIVIL STATE OF CALIFORNIA

ALAN WING-CHI LEE R.C.E. 34971 EXP. 09-30-17

consultant

FILE NO.:

IDENTIFICATION STAMP
DIVISION OF THE STATE ARCHITECT
DEPARTMENT OF GENERAL SERVICES

AC _____ FLS _____ SS _____

DATE _____

DEPARTMENT OF GENERAL SERVICES
DSA Los Angeles Regional Office
700 N. Alameda Street, Suite 5-500
Los Angeles, California 90012
ph: (213)897-3995 fx: (213)897-3159/0726

DUNSMORE ELEMENTARY SCHOOL RELOCATABLE CLASSROOMS

GLENDALE UNIFIED SCHOOL DISTRICT
4717 DUNSMORE AVE.
LA CRESCENTA, CA 91214

owner

tBP project number : 20967.00

file name:

drawn by: checked by:

date: March 2017

Rev:	date:	description:

THIS DRAWING AND THE DESIGNS, DEPICTIONS, IDEAS AND OTHER INFORMATION CONTAINED HEREIN CONSTITUTE UNPUBLISHED WORK OF tBP/ARCHITECTURE AND SHALL REMAIN THE PROPERTY OF tBP/ARCHITECTURE IN PERPETUITY. NO PART THEREOF SHALL BE REPRODUCED, DISCLOSED, DISTRIBUTED, SOLD, PUBLISHED OR OTHERWISE USED IN ANY WAY WITHOUT THE ADVANCED EXPRESS WRITTEN CONSENT OF tBP/ARCHITECTURE.

drawing title:

DEMOLITION PLAN

drawing no.:

C1.1

drawing of

HORIZONTAL CONTROL

AN AUTOCAD GEOMETRIC ELECTRONIC FILE SHALL BE MADE AVAILABLE TO THE CONTRACTOR UPON REQUEST FOR THE CONTRACTOR'S SURVEYOR TO LAYOUT THE CONSTRUCTION STAKING OF THE PROJECT. THE SURVEYOR OR CONTRACTOR WILL NEED TO SIGN A WAIVER FORM BEFORE RELEASE OF ANY CAD ELECTRONIC DRAWINGS.

BENCHMARK:

LOS ANGELES COUNTY BENCHMARK "9Y11240"
ELEVATION 1836.498 FEET (NAVD88) QUAD YEAR 2005

"DPW BM TAG IN N CB 3.3 W/O BCR @ NW COR PENNSYLVANIA AVE & ORANGE AVE"

NOTE: CONTRACTOR SHALL RESTORE ALL AREAS ON THE SITE DAMAGED DURING THE COURSE OF WORK TO MATCH EXISTING.

NOTE: STRAIGHT GRADES SHALL BE CONSTRUCTED BETWEEN SPOT ELEVATIONS OR CONTOURS INDICATED, EXCEPT WHERE GRADE BREAKS INTERVENE.

EARTHWORK NOTICE TO CONTRACTOR: NO EARTHWORK ANALYSIS HAS BEEN COMPLETED WITH RESPECT TO VOLUMES OF SOILS TO BE EXCAVATED, PLACED, OR IMPORTED IN ORDER TO PROVIDE THE FINISHED GRADES SHOWN ON THE PLANS. THE CONTRACTOR IS SOLELY RESPONSIBLE FOR VERIFYING THE EARTHWORK QUANTITIES NECESSARY TO COMPLETE THE PROJECT.

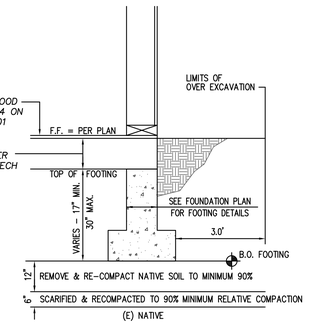

OVER-EXCAVATION DETAIL
NOT TO SCALE

CONSTRUCTION NOTES:

1. PROTECT EXISTING IMPROVEMENTS IN PLACE.
2. CONSTRUCT ASPHALT PAVEMENT PER DETAIL 2 ON C1.3.
3. CONSTRUCT CONCRETE PAVEMENT PER DETAIL 3 ON SHEET C1.3. PROTECT EXISTING WALL, RAILING & CURBS IN PLACE.
4. CONSTRUCT CONCRETE SWALE PER DETAIL 4 ON SHEET C1.3.
5. ADJUST EXISTING MANHOLE TO BE FLUSH WITH NEW PAVEMENT SURFACE PER S.P.W.C. STANDARD PLAN 205-2.
6. CLEANOUT & REMOVE DEBRIS IN DROP INLET.
7. COAT SIDE OF EXISTING ASPHALT WITH TACK COAT MEETING S.S.P.W.C. SECTION 302-5.4.
8. CONSTRUCT RETAINING CURB PER DETAIL 8 ON C1.3 AND GRADES HEREON.
9. CONSTRUCT DRYWELL PER DETAIL 9 HEREON.
10. CONSTRUCT 2" THICK CONCRETE GOPHER SLAB, NO REBAR. CONCRETE CLASS 520-C-2500 PER S.S.P.W.C. SECTION 201-1.
11. CONSTRUCT PLANTER PER ARCHITECTURAL PLANS.
12. HIGH PRESSURE WATER SPRAY AWAY ALL EXISTING STRIPING. REPAIR ANY EXISTING CRACKS WIDER THAN 1/8-INCH. APPLY 2 COATS OF ASPHALT BASED SEAL COAT MEETING S.S.P.W.C. SECTION 203-9 AND PROJECT SPECIFICATION 32 12 36 REQUIREMENTS ON EXISTING ASPHALT.

GENERAL NOTES FOR GRADING

1. ALL WORK SHALL CONFORM WITH THE "GREENBOOK" STANDARD SPECIFICATIONS FOR PUBLIC WORKS CONSTRUCTION (SSPWC), 2015 EDITION AND THE LATEST REVISIONS THERETO, THE WORK AREA TRAFFIC CONTROL HANDBOOK (W.A.T.C.H. MANUAL), A.D.A, TITLE 24 REQUIREMENTS, AND 2016 C.B.C. UNLESS SPECIFIED OTHERWISE IN THE CONTRACT SPECIFICATIONS.
2. THROUGHOUT ALL PHASES OF CONSTRUCTION, INCLUDING SUSPENSION OF WORK, UNTIL FINAL ACCEPTANCE OF THE PROJECT, THE CONTRACTOR SHALL KEEP THE WORK SITE CLEAN AND FREE FROM RUBBISH AND DEBRIS. THE CONTRACTOR SHALL ALSO ABATE DUST NUISANCE BY CLEANING, SWEEPING AND SPRINKLING WITH WATER AND USING DUST FENCES OR OTHER METHODS AS DIRECTED BY THE CONSTRUCTION MANAGER OR FIELD INSPECTOR THROUGHOUT THE CONSTRUCTION OPERATION AND SHALL INCORPORATE IN BASE BID.
3. THE CONTRACTOR SHALL KEEP A STRICT RECORD OF ALL CHANGES THAT OCCUR DURING CONSTRUCTION PRACTICES AND SUBMIT THIS RECORD TO THE SCHOOL DISTRICT CERTIFIED AS "RECORD DRAWING" PLANS.
4. ALL DAMAGE CAUSED TO PUBLIC STREETS, INCLUDING HAUL ROUTES, ALLEYS, SIDEWALKS, CURBS OR STREET FURNISHINGS, OR TO PRIVATE PROPERTY SHALL BE REPAIRED AT THE SOLE EXPENSE OF THE CONTRACTOR TO THE ENGINEER'S SATISFACTION.
5. THE CONTRACTOR SHALL REMOVE AND REPLACE ANY BROKEN OR DAMAGED SIDEWALK, CURB, GUTTER OR ASPHALT PAVING AND TURF (PATCH, REPAIR OR OVERLAY) CAUSED BY THEIR WORK ON THIS PROJECT AT THE DIRECTION OF THE OWNER.
6. ALL UNDERGROUND SEWER, STORM DRAIN, AND WATER PIPELINES, ELECTRIC POWER, TELEPHONE OR CABLE TV CONDUITS AND CABLE AND GAS PIPELINES SHALL BE INSTALLED PRIOR TO CONSTRUCTION OF CURBS, GUTTERS, SIDEWALKS AND PAVEMENT.
7. WHERE JOINING THE EXISTING PAVEMENT, SAWCUT TO SOUND PAVEMENT AND OVERLAY AS REQUIRED TO PROVIDE PROPER GRADE AND 2% MAX. CROSS-SLOPE OR 5% MAX. RUNNING SLOPE AS NOTED ON PLANS. ANY UNSOUND PAVEMENT SHALL BE REPLACED AS REQUIRED BY THE ENGINEER.
8. AT LEAST TWO (2) WORKING DAYS BEFORE COMMENCING EXCAVATION, THE CONTRACTOR SHALL POTHOLE AND EXPOSE THE EXISTING UTILITIES AT ALL CROSSINGS AND AT THE POINT OF TIE-IN; THEN CONTACT THE ENGINEER TO VERIFY THE ELEVATION OF THE EXISTING FACILITIES.
9. ALL UNSUITABLE MATERIAL SHALL BE REMOVED, AS DIRECTED BY THE SOILS ENGINEER, FROM ALL AREAS TO RECEIVE COMPACTED FILL OR DRAINAGE STRUCTURES.
10. ALL DELETERIOUS MATERIAL (I.E. LUMBER, LOGS, BRUSH, RUBBISH, ETC.) SHALL BE REMOVED FROM ALL AREAS TO RECEIVE COMPACTED FILL AND HAULED TO DUMP-SITE APPROVED BY THE ENGINEER.
11. ALL AREAS TO RECEIVE COMPACTED FILL SHALL BE INSPECTED AND APPROVED BY THE SOILS ENGINEER AFTER REMOVAL OF UNSUITABLE MATERIAL AND EXCAVATION OF KEYWAYS AND BENCHES, AND PRIOR TO PLACEMENT OF SUBSURFACE DRAINAGE SYSTEMS OR ANY FILLS.
12. ALL SOILS OR ROCK MATERIALS DEEMED UNSUITABLE FOR PLACEMENT IN COMPACTED FILL SHALL BE REMOVED FROM THE SITE. ANY IMPORTED MATERIAL SHALL BE APPROVED BY THE SOILS ENGINEER PRIOR TO USE IN COMPACTED FILL. BLOCKY MATERIAL SHALL BE BROKEN INTO SUITABLE PARTICLE SIZES, BEFORE BEING USED AS FILL IN CONFORMANCE WITH THE CITY STANDARDS.
13. ALL TREE ROOTS, ABANDONED IRRIGATION LINES, UTILITY SERVICES AND SIMILAR MATERIALS ENCOUNTERED DURING EXCAVATION SHALL BE REMOVED FROM THE SITE AND VOIDS CREATED THEREBY SHALL BE PROPERLY FILLED AND COMPACTED AS DIRECTED BY THE SOILS ENGINEER.
14. ALL EXCAVATED BACK SLOPES AND KEYS FOR BUTTRESS FILLS MUST BE EXAMINED BY THE ENGINEERING GEOLOGIST AND SOILS ENGINEER TO INSURE ALL POTENTIAL PLANES OF FAILURE HAVE BEEN EXPOSED IN THE EXCAVATION AND WILL BE ADEQUATELY SUPPORTED BY THE PROPOSED BUTTRESS FILLS.
15. THE SOILS ENGINEER SHALL SUBMIT RECOMMENDATIONS FOR CORRECTIVE WORK TO INSURE SLOPE STABILITY WHERE UNSTABLE MATERIAL IS EXPOSED AT THE TOP OF CUTS.
16. THE CONTRACTOR SHALL BE RESPONSIBLE FOR PROVIDING STORM DAMAGE PREVENTION MEASURES OR EROSION CONTROL DEVICES AND/OR TO PERFORM CERTAIN GRADING TO PREVENT SOIL OR EXCESS RUNOFF FROM FLOWING INTO PUBLIC STREETS OR ADJACENT PROPERTIES. IN THE EVENT OF SUCH AN OCCURRENCE, CLEANUP SHALL COMMENCE IMMEDIATELY. SHOULD CITY FORCES OR THE CITY CONTRACTOR PERFORM ANY CLEANUP RESULTING FROM THIS DEVELOPMENT, THE CONTRACTOR SHALL PAY THE COST INCURRED WITHIN TEN (10) WORKING DAYS UPON RECEIPT OF BILLING.
17. EITHER WATER OR DUST PALLIATIVE, OR BOTH, MUST BE APPLIED FOR THE ALLEVIATION OR PREVENTION OF EXCESSIVE DUST RESULTING FROM THE LOADING OR TRANSPORTATION OF EARTH FROM OR TO THE PROJECT SITE OR PRIVATE AND PUBLIC ROADWAYS.
18. MAXIMUM SLOPES FOR BOTH CUT AND FILL SHALL BE 2:1.
19. NO OVERSIZE OR OVERWEIGHT LOADS ARE PERMITTED WITHOUT A SEPARATE MOVING PERMIT.
20. ALL EQUIPMENT USED TO HAUL EXCAVATION OR FILL MATERIAL FROM OR TO THE SITE SHALL FOLLOW A DESIGNATED ROUTE OR ROUTES IN GOING TO AND FROM THE SITE. THE CONTRACTOR SHALL BE ENTITLED TO THE DESIGNATION OF A ROUTE PROVIDING ACCESS TO A SPECIFIED PLACE OTHER THAN THE SITE, AFTER SHOWING TO THE SATISFACTION OF THE CITY BUILDING OFFICIAL THAT SUCH SPECIFIED PLACE IS A PLACE WHERE EXCAVATION MATERIAL MAY BE REASONABLY DEPOSITED OR FILL MATERIAL MAY BE OBTAINED. A SEPARATE ENCROACHMENT PERMIT IS REQUIRED WHEN IT IS NECESSARY TO FLAG TRAFFIC OR INSTALL ANY TRAFFIC CONTROL DEVICES ON CITY RIGHT-OF-WAY.
21. ANY EARTH ROCK, GRAVEL, SAND, STONE OR OTHER EXCAVATED MATERIAL DEPOSITED OR CAUSED TO ROLL, FLOW OR WASH UPON ANY PUBLIC PLACE OR PRIVATE PROPERTY SHALL BE REMOVED FROM SUCH PUBLIC PLACE OR PRIVATE PROPERTY BY THE END OF THE WORKDAY BY THE CONTRACTOR RESPONSIBLE FOR THE DEPOSITION. IF AN ADVERSE CONDITION IS CAUSED BY DEPOSIT, THE CONDITION SHALL BE CORRECTED IMMEDIATELY.
22. EVERY EFFORT SHOULD BE MADE TO ELIMINATE THE DISCHARGE OF NON-STORMWATER FROM THE PROJECT SITE AT ALL TIMES.
23. ALL TRUCKS HAULING DIRT, SAND, OIL, OR OTHER LOOSE MATERIALS ARE TO BE COVERED OR SHOULD MAINTAIN AT LEAST TWO FEET OF FREEBOARD IN ACCORDANCE WITH THE REQUIREMENTS OF CVC SECTION 23114.
24. ADJUST UTILITY BOXES TO BE FLUSH WITH ULTIMATE FINISH SURFACE IN PAVING SCOPE OF WORK AREAS.
25. CONTRACTOR SHALL HIRE A LICENSED SURVEYOR TO STAKE ALL CATCH BASINS, STORM DRAIN PIPE, SAW-CUT LINES, BUILDING PADS, FINISH FLOORS, SWALES AND GRADE BREAKS. TWO STAKES SHALL BE PROVIDED FOR ALL CATCH BASINS.
26. IN ORDER TO MITIGATE THE IMPACTS ON CULTURAL RESOURCES OR LANDSCAPING, IF CULTURAL MATERIAL SUGGESTIVE OF PREHISTORIC OR HISTORIC ORIGIN IS ENCOUNTERED, WORK IN THE VICINITY OF THE FIND SHALL BE STOPPED, AND THE OWNER SHALL BE NOTIFIED. GRADING, CONSTRUCTION OR LANDSCAPING SHALL NOT RESUME UNTIL THE FIND IS EVAULATED AND IT IS DETERMINED WHETHER THE MATERIAL IS ARCHAEOLOGICALLY SIGNIFICANT AND ADDITIONAL MITIGATION IS REQUIRED.
27. NO PERSON SHALL, WHEN HAULING ANY EARTH, SAND, GRAVEL, ROCK, STONE OR OTHER EXCAVATED MATERIAL OR DEBRIS OVER ANY PUBLIC STREET, ALLEY OR OTHER PUBLIC PLACE, ALLOW SUCH MATERIAL TO BLOW OR SPILL OVER UPON SUCH STREET, ALLEY OR PUBLIC PLACE OR ADJACENT PRIVATE PROPERTY OR ANY WATER BODIES, CREEKS OR STREAMS. THE CONTRACTOR SHALL BE RESPONSIBLE FOR THE CLEANUP AND REMOVAL OF ANY CONSTRUCTION OR SOILS MATERIALS DEPOSITED ON THE PUBLIC RIGHT-OF-WAY, PUBLIC WATERS OR ADJACENT PRIVATE PROPERTY.

FLOOD ZONE INFORMATION

Per Flood Insurance Rate Map Number 06037C1335F, dated September 26, 2008, the flood zone for this area is "ZONE X". ZONE X is an area determined to be outside the 0.2% annual chance floodplain.

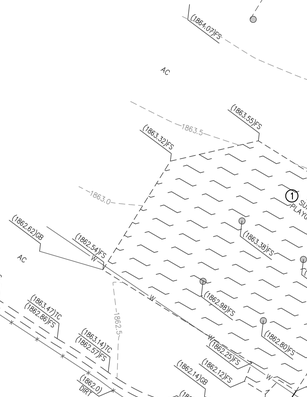

9 DRYWELL DETAIL
NOT TO SCALE

NOTE TO CONTRACTOR: THE GENERAL CONTRACTOR IS REQUIRED TO PERFORM ALL SITE PREPRATION WORK, INCLUDING BUT NOT LIMITED TO: EXCAVATION, OVER-EXCAVATION, SCARIFING, COMPACTION & HAULING AWAY EARTH MATERIAL UNDER PROPOSED BUILDINGS TO FORM PIT FOR FOUNDATIONS. EARTH MATERIAL SHALL BE OVEREXCAVATED TO A DEPTH OF 1 FOOT BELOW THE BOTTOM OF FOUNDATIONS. FOUNDATION AREAS SHALL BE DEFINED AS THE AREAS EXTENDING FROM THE EDGE OF FOOTINGS, FOR A DISTANCE OF 3 FEET. CONTRACTOR SHALL ALSO INSTALL DRYWELLS, ACCESS WELL VENTS, AIR VENT WELLS & CONCRETE FOUNDATIONS. CONTRACTOR IS REQUIRED TO REMOVE SURPLUS SOIL AND WASTE MATERIAL, INCLUDING UNSATISFACTORY SOIL, TRASH, & DEBRIS AND LEGALLY DISPOSE OF IT OFF THE OWNER'S PROPERTY.

(E)CLASSROOM BLDG. NO. 6
(E)ADMIN. BLDG. NO. 1
(E)MULTI-PURPOSE BLDG. NO. 7
(E)ASPHALT PLAYGROUND
(E)VOLLEYBALL

10 5 0 10 20 30
SCALE: 1" = 10'

LEGEND:

- = EXISTING BUILDING
- = NEW BUILDING / 2" THICK GOHPER SLAB UNDER BUILDING (10)
- = NEW CONCRETE PAVING (3)
- = NEW ASPHALT CONCRETE PAVING (2)
- = NEW ASPHALT SEAL COAT OVER EXISTING ASPHALT (12)
- = EXISTING CONCRETE PAVING
- W — W — (E)DOMESTIC WATER
- S — S — (E)SANITARY SEWER
- G — G — (E)GAS
- E — E — (E)ELECTRICAL/POWER
- C — C — (E)COMMUNICATIONS

tBP architecture planning interiors
LICENSED ARCHITECT TIMOTHY L. BROWN NO. C34181 STATE OF CALIFORNIA
tBP/Architecture
4611 Teller Avenue
Newport Beach, CA 92660
ph: 949.673.0300 fx: 949.732.3895
architect

PLANS PREPARED BY:
FPL FPL and Associates, Inc.
Traffic • Transportation • Civil
30 Corporate Park, Suite 401
Irvine, CA 92606
PHONE: 949-252-1688
REGISTERED PROFESSIONAL ENGINEER No. C 34971 Exp. 09-30-17 CIVIL STATE OF CALIFORNIA
ALAN WING-CHI LEE
R.C.E. 34971
EXP. 09-30-17
consultant

FILE NO.:
IDENTIFICATION STAMP
DIVISION OF THE STATE ARCHITECT
DEPARTMENT OF GENERAL SERVICES
AC ____ FLS ____ SS ____
DATE ____

DEPARTMENT OF GENERAL SERVICES
DSA Los Angeles Regional Office
700 N. Alameda Street, Suite 5-500
Los Angeles, California 90012
ph: (213)897-3995 fx: (213)897-3159/0726

DUNSMORE ELEMENTARY SCHOOL RELOCATABLE CLASSROOMS

GLENDALE UNIFIED SCHOOL DISTRICT
4717 DUNSMORE AVE.
LA CRESCENTA, CA 91214

owner

tBP project number : 20967.00
file name:
drawn by: checked by:
date: March 2017

Rev:	date:	description:

THIS DRAWING AND THE DESIGNS, DEPICTIONS, IDEAS AND OTHER INFORMATION CONTAINED HEREIN CONSTITUTE UNPUBLISHED WORK OF tBPARCHITECTURE AND SHALL REMAIN THE PROPERTY OF tBPARCHITECTURE IN PERPETUITY. NO PART THEREOF SHALL BE REPRODUCED, DISCLOSED, DISTRIBUTED, SOLD, PUBLISHED OR OTHERWISE USED IN ANY WAY WITHOUT THE ADVANCED EXPRESS WRITTEN CONSENT OF tBPARCHITECTURE.

drawing title:
GRADING PLAN

drawing no.:
C1.2
drawing of

TRENCHING DETAILS FOR SEWER & WATER LINES

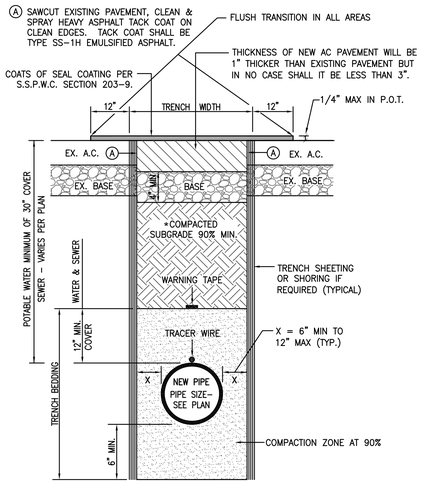

EXISTING ASPHALT AREAS
N.T.S.

TRENCH EXCAVATION, BEDDING, & BACKFILL NOTES:

EXCAVATION NOTE: THE 2016 CALIFORNIA OCCUPATIONAL SAFETY AND HEALTH REGULATIONS (CAL/OSHA) WILL REQUIRE A PERMIT FOR THE CONSTRUCTION OF TRENCHES OR EXCAVATIONS WHICH ARE FIVE (5) FEET OR DEEPER AND INTO WHICH A PERSON IS REQUIRED TO DESCEND. FOR PERMIT PURPOSES, "DESCEND" MEANS TO ENTER ANY PART OF THE TRENCH OR EXCAVATION ONCE THE EXCAVATION HAS ATTAINED A DEPTH OF 5 FEET OR MORE. FOR REGULATIONS RELATING TO PERMITS FOR EXCAVATIONS AND TRENCHES, REFER TO THE CALIFORNIA CODE OF REGULATIONS TITLE 8, CHAPTER 3.2, ARTICLE 2, SECTION 341 OF THE CALIFORNIA OCCUPATIONAL SAFETY AND HEALTH REGULATIONS (CAL/OSHA)

THE CONTRACTOR SHALL SUBMIT A DETAIL SHOWING THE DESIGN OR SHORING; BRACING SLOPING OR OTHER PROVISIONS TO BE MADE FOR WORKER PROTECTION FROM THE HAZARDS OF CAVING GROUND DURING THE EXCAVATION. THE PLAN SUBMITTED SHALL BE SIGNED BY A REGISTERED CIVIL OR STRUCTURAL ENGINEER CERTIFIED THAT THE PLAN COMPLIES WITH ALL OSHA CONSTRUCTION SAFETY ORDERS.

BEDDING & BACKFILL SHALL BE PLACED IN ACCORDANCE WITH SECTION 306-1.2.1 AND 306-1.3 OF THE "STANDARD SPECIFICATIONS FOR PUBLIC WORKS CONSTRUCTION (S.S.P.W.C.), 2015 EDITION" AND AS SUPPLEMENTED HEREIN. TRENCH BACKFILL SLURRY PER SECTION 201-1. EXISTING SITE SOILS, WHERE CONDITIONS DICTATE HEREIN, ARE CONSIDERED SUITABLE FOR BACKFILLING OF UTILITY TRENCHES PROVIDED THEY ARE FREE OF DEBRIS, PARTICLES GREATER THAN 4 INCHES IN MAXIMUM DIMENSION, ORGANIC MATTER OR OTHER DELETERIOUS MATERIALS. EXTREME CARE SHALL BE TAKEN TO AVOID DAMAGE TO CONDUITS, PIPES, AND ANY APPURTENANCES. PER SECTION 306-1.2.1 OF S.S.P.W.C., IF SOFT, SPONGY, UNSTABLE OR OTHER UNSUITABLE MATERIAL IS ENCOUNTERED UPON WHICH THE BEDDING MATERIAL OR PIPE IS TO BE PLACED, THIS MATERIAL SHALL BE REMOVED TO A DEPTH ORDERED BY THE CIVIL ENGINEER AND REPLACED WITH BEDDING MATERIAL SUITABLY DENSIFIED.

COMPACTION METHODS: ALL BEDDING & BACKFILL COMPACTION SHALL BE BY HAND-OPERATED, PLATE-TYPE, VIBRATORY, OR OTHER SUITABLE HAND-TAMPERS IN AREAS NOT ACCESSIBLE TO LARGER ROLLERS OR COMPACTERS. EXTREME CARE SHALL BE TAKEN TO AVOID DAMAGE TO CONDUITS, PIPES, AND ANY APPURTENANCES. WATER DENSIFICATION BY INUNDATION OR JETTING SHALL NOT BE PERMITTED WITHOUT PRIOR WRITTEN APPROVAL FROM CIVIL ENGINEER.

SHEETING: WHEN EXCAVATION DEPTHS OR SOIL CONDITIONS REQUIRE SHORING OR USE OF A TRENCH BOX, THE BOTTOM OF THE SHORING OR TRENCH BOX SHOULD BE PLACED NO LOWER THEN THE TOP OF THE PIPE. THIS PREVENTS DISRUPTION OF THE BACKFILL ENVELOPE WHEN REMOVING THE SHORING OR TRENCH BOX. IF THIS PRACTICE CANNOT BE FOLLOWED, CONSIDERATION SHOULD BE GIVEN TO LEAVING THE SHORING IN PLACE.

* GENERAL NOTES:

IF 90% COMPACTION IS NOT ATTAINABLE DURING CONSTRUCTION THE USE OF A SLURRY BACKFILL MAY BE SUBSTITUTED. SAND SLURRY SHALL CONSIST OF 1 SACK PORTLAND CEMENT (CLASS 100-E-100) PER CUBIC YARD OF SAND SLURRY MIX.

WARNING TAPE NOTES (ON-SITE WATER):

A METALLIC LINED TAPED FOR UNDERGROUND PIPES, MARKED "CAUTION BURIED WATER LINE BELOW", IN POLYETHYLENE FILM COLOR BLUE, INSTALLED ABOVE PIPE, 6" WIDE.

WARNING TAPE NOTES (ON-SITE SEWER):

A METALLIC LINED TAPED FOR UNDERGROUND PIPES, MARKED "CAUTION BURIED SEWER LINE BELOW", IN POLYETHYLENE FILM COLOR GREEN, INSTALLED ABOVE PIPE, 6" WIDE.

TRACER WIRE NOTES:

COPPER TRACER WIRE SHALL BE INSTALLED ON ALL NON-METALLIC PIPELINES, 2" AND GREATER, JUST ABOVE THE HORIZONTAL CENTERLINE OF THE PIPE. THE COPPER WIRE SHALL BE #14 AWG.

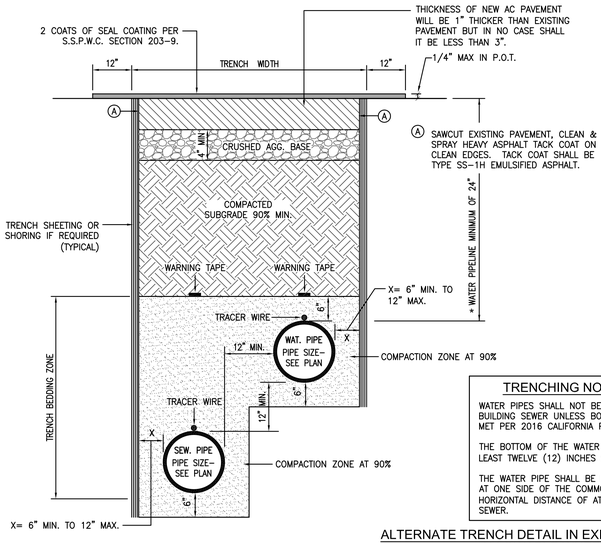

ALTERNATE TRENCH DETAIL IN EXISTING ASPHALT CONCRETE AREAS
(ALLOWABLE WHERE CONDITIONS APPLY)
NOT TO SCALE

TRENCHING NOTICE TO CONTRACTOR

WATER PIPES SHALL NOT BE RUN OR LAID IN THE SAME TRENCH AS BUILDING SEWER UNLESS BOTH OF THE FOLLOWING CONDITIONS ARE MET PER 2016 CALIFORNIA PLUMBING CODE, SECTION 609.2:

THE BOTTOM OF THE WATER PIPE, AT ALL POINTS, SHALL BE AT LEAST TWELVE (12) INCHES ABOVE THE TOP OF THE SEWER LINE.

THE WATER PIPE SHALL BE PLACED ON A SOLID SHELF EXCAVATED AT ONE SIDE OF THE COMMON TRENCH WITH A MINIMUM CLEAR HORIZONTAL DISTANCE OF AT LEAST TWELVE (12) INCHES FROM THE SEWER.

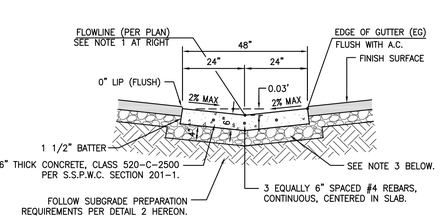

4 CONCRETE SWALE DETAIL
NOT TO SCALE

CONCRETE SWALE NOTES:

1. CONCRETE SWALE SHALL HAVE AN 4" WIDE FLOWLINE SMOOTH STEEL TROWEL FINISH.
2. CONSTRUCT CONTROL JOINTS IN SWALE AT REGULAR INTERVALS OF 8' PER DETAIL HEREON.

   CONSTRUCT EXPANSION JOINTS WITH REBAR IN SWALE AT REGULAR INTERVALS OF 24' PER DETAIL HEREON.
3. A 4" THICK LAYER OF CRUSHED AGGREGATE BASE MATERIAL SHALL BE PLACED UNDER THE SWALE. MINIMUM COMPACTION OF 95% RELATIVE DENSITY IS REQUIRED.
4. CROSS-SLOPE MUST NOT EXCEED 2% AND SLOPE IN THE DIRECTION OF TRAVEL MUST BE LESS THAN 5% IN AREAS DEFINED AS A PEDESTRIAN PATH OF TRAVEL.

3 CONCRETE PAVEMENT STRUCTURAL SECTION

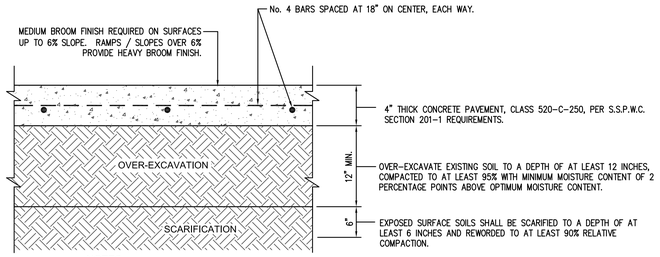

NOTES:
1. MEDIUM BROOM FINISH REQUIRED ON WALK SURFACES UP TO 6% SLOPE.
2. ADJACENT PAVING, WHERE OCCURS, TO BE FLUSH WITH TOP EDGE OF SLAB.
3. ALL CONCRETE WALKS SHALL BE ASTM C-150 TYPE II PORTLAND CEMENT.
4. ALL CONCRETE WALKS SHALL BE 1" MAXIMUM COARSE AGGREGATE SIZE CONFORMING TO GRADING 'C' OF THE S.P.P.W.C. SECTION 201-1.3.2(A).

2 ASPHALT CONCRETE PAVEMENT STRUCTURAL SECTION

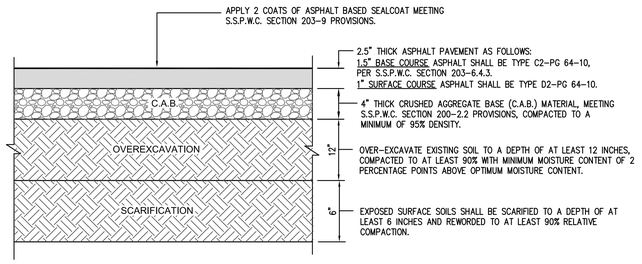

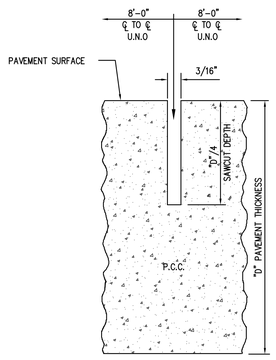

A CONTROL JOINT (C.J.)
NOT TO SCALE

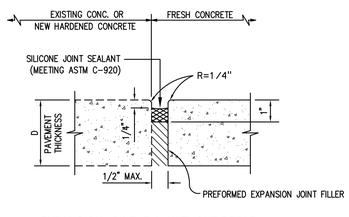

B EXPANSION JOINT (E.J.) WITHOUT REBAR
NOT TO SCALE

NOTES:
1. MEDIUM BROOM FINISH REQUIRED ON WALK SURFACES UP TO 6% SLOPE.
2. ADJACENT PAVING, WHERE OCCURS, TO BE FLUSH WITH TOP EDGE OF SLAB.
3. ALL CONCRETE WALKS SHALL BE ASTM C-150 TYPE II PORTLAND CEMENT.
4. ALL CONCRETE WALKS SHALL BE 1" MAXIMUM COARSE AGGREGATE SIZE CONFORMING TO GRADING 'C' OF THE S.P.P.W.C. SECTION 201-1.3.2(A).

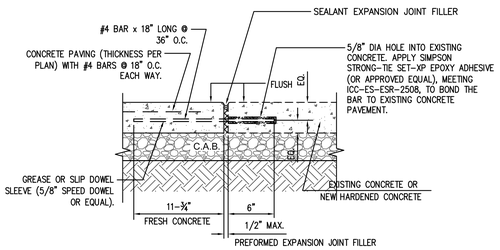

NOTE: 1. VERTICAL CHANGE IN ELEVATION ALONG ACCESSIBLE PATH OF TRAVEL CANNOT EXCEET 1/4" PER CBC 11B-303.2.

2. LEVEL CHANGE BETWEEN 1/4"-1/2" MUST BE BEVELED AT 1:2 MAX PER CBC 11B-303.2 & 11B-303.3.

C EXPANSION JOINT (E.J.) WITH REBAR
NOT TO SCALE

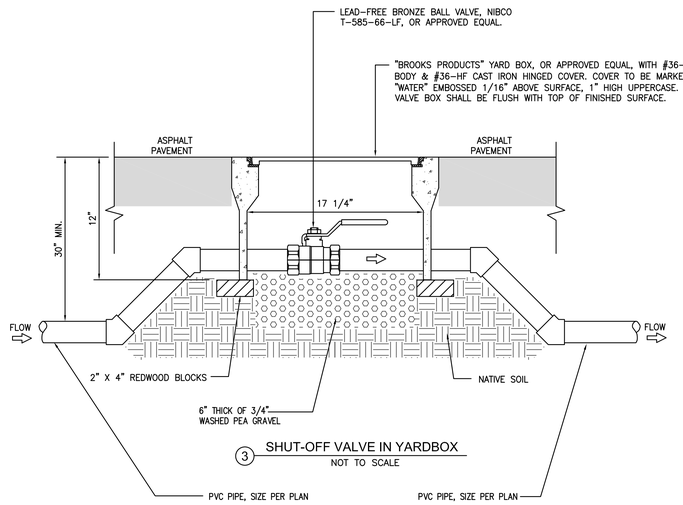

3 SHUT-OFF VALVE IN YARDBOX
NOT TO SCALE

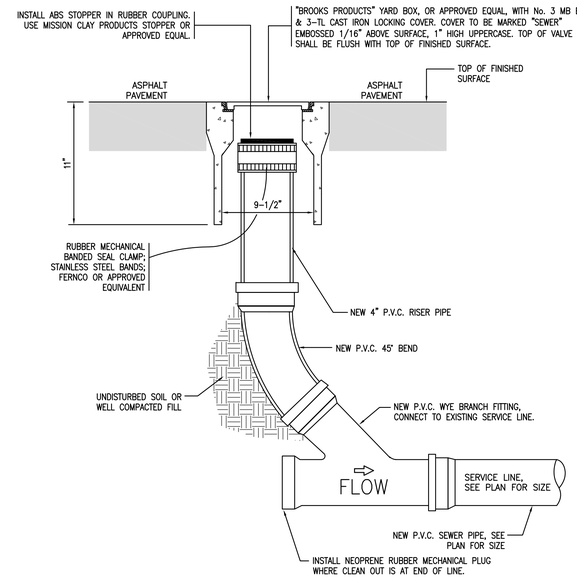

D SEWER CLEAN OUT & YARD BOX DETAIL
NOT TO SCALE

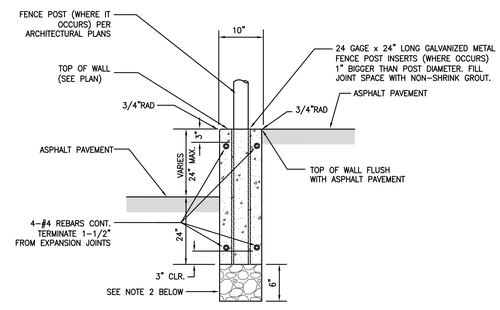

8 RETAINING CURB DETAIL
NOT TO SCALE

CURB NOTES:
1. PROVIDE EXPANSION JOINTS AT 30'-0" O.C. MAX
2. CRUSHED BASE MATERIAL, 6" THICK, SHALL BE PLACED UNDER CONCRETE CURB. MINIMUM COMPACTION OF 95% ON SUBGRADE IS REQUIRED UNLESS WAIVED BY CIVIL ENGINEER.

tBP architecture planning interiors

LICENSED ARCHITECT ALAN WING-CHI LEE No. C 34971 EXP. 09-30-17 STATE OF CALIFORNIA

tBP/Architecture
4611 Teller Avenue
Newport Beach, CA 92660
ph: 949.673.0300 fx: 949.732.3895

architect

PLANS PREPARED BY:
FPL FPL and Associates, Inc.
Traffic • Transportation • Civil
30 Corporate Park, Suite 401
Irvine, CA 92606
PHONE: 949-252-1688

REGISTERED PROFESSIONAL ENGINEER No. C 34971 Exp. 09-30-17 CIVIL STATE OF CALIFORNIA

ALAN WING-CHI LEE R.C.E. 34971 EXP. 09-30-17

consultant

FILE NO.:
IDENTIFICATION STAMP
DIVISION OF THE STATE ARCHITECT
DEPARTMENT OF GENERAL SERVICES
AC ____ FLS ____ SS ____
DATE ____

DEPARTMENT OF GENERAL SERVICES
DSA Los Angeles Regional Office
700 N. Alameda Street, Suite 5-500
Los Angeles, California 90012
ph: (213)897-3995 fx: (213)897-3159/0726

DUNSMORE ELEMENTARY SCHOOL RELOCATABLE CLASSROOMS

GLENDALE UNIFIED SCHOOL DISTRICT
4717 DUNSMORE AVE.
LA CRESCENTA, CA 91214

owner

tBP project number : 20967.00
file name:
drawn by: checked by:
date: March 2017

Rev:	date:	description:

THIS DRAWING AND THE DESIGNS, DEPICTIONS, IDEAS AND OTHER INFORMATION CONTAINED HEREIN CONSTITUTE UNPUBLISHED WORK OF tBP/ARCHITECTURE AND SHALL REMAIN THE PROPERTY OF tBP/ARCHITECTURE IN PERPETUITY. NO PART THEREOF SHALL BE REPRODUCED, DISCLOSED, DISTRIBUTED, SOLD, PUBLISHED OR OTHERWISE USED IN ANY WAY WITHOUT THE ADVANCED EXPRESS WRITTEN CONSENT OF tBP/ARCHITECTURE.

drawing title:

DETAIL SHEET

drawing no.:

C1.3

drawing of

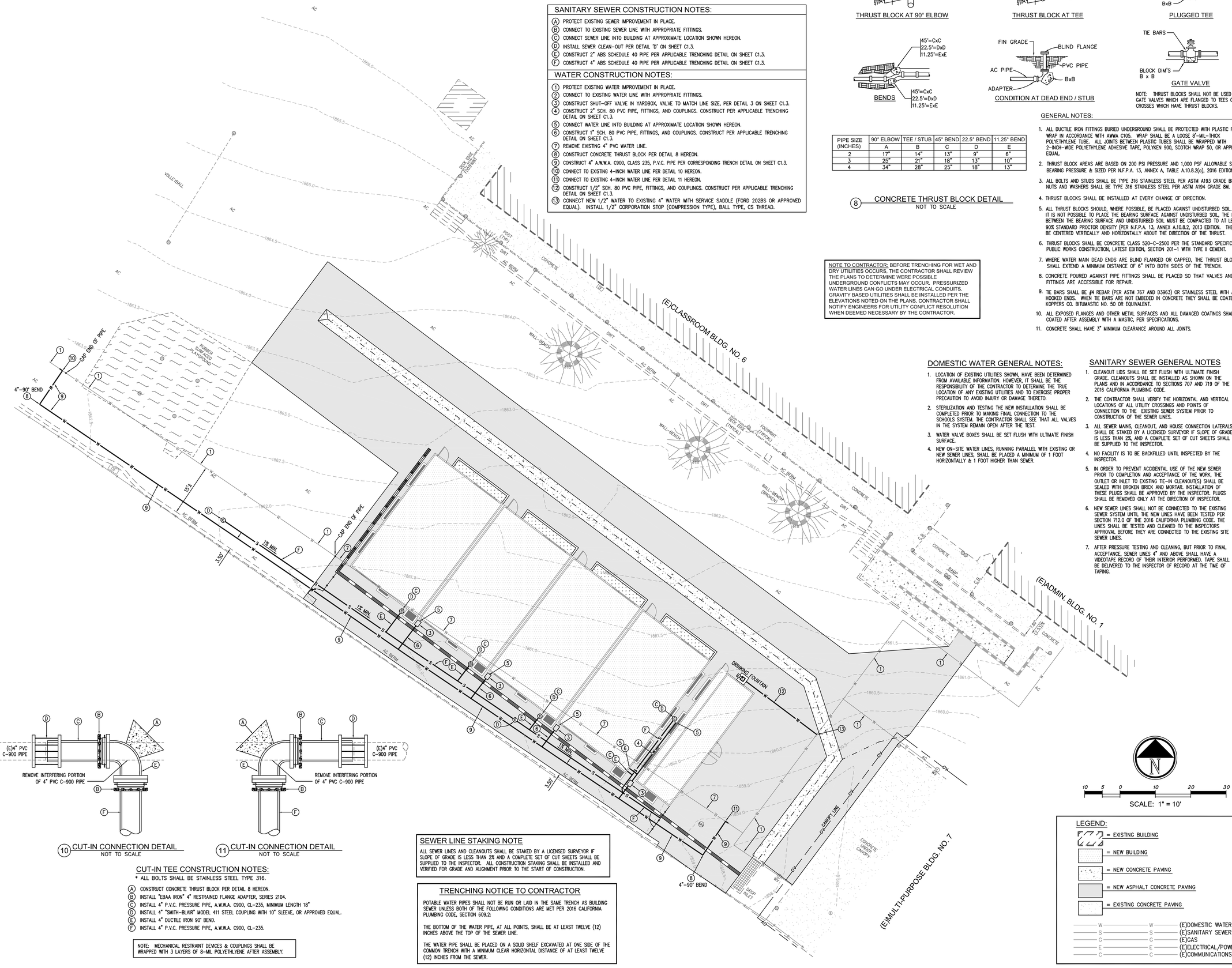

SANITARY SEWER CONSTRUCTION NOTES:

- (A) PROTECT EXISTING SEWER IMPROVEMENT IN PLACE.
- (B) CONNECT TO EXISTING SEWER LINE WITH APPROPRIATE FITTINGS.
- (C) CONNECT SEWER LINE INTO BUILDING AT APPROXIMATE LOCATION SHOWN HEREON.
- (D) INSTALL SEWER CLEAN-OUT PER DETAIL 'D' ON SHEET C1.3.
- (E) CONSTRUCT 2" ABS SCHEDULE 40 PIPE PER APPLICABLE TRENCHING DETAIL ON SHEET C1.3.
- (F) CONSTRUCT 4" ABS SCHEDULE 40 PIPE PER APPLICABLE TRENCHING DETAIL ON SHEET C1.3.

WATER CONSTRUCTION NOTES:

- (1) PROTECT EXISTING WATER IMPROVEMENT IN PLACE.
- (2) CONNECT TO EXISTING WATER LINE WITH APPROPRIATE FITTINGS.
- (3) CONSTRUCT SHUT-OFF VALVE IN YARDBOX, VALVE TO MATCH LINE SIZE, PER DETAIL 3 ON SHEET C1.3.
- (4) CONSTRUCT 2" SCH. 80 PVC PIPE, FITTINGS, AND COUPLINGS. CONSTRUCT PER APPLICABLE TRENCHING DETAIL ON SHEET C1.3.
- (5) CONNECT WATER LINE INTO BUILDING AT APPROXIMATE LOCATION SHOWN HEREON.
- (6) CONSTRUCT 1" SCH. 80 PVC PIPE, FITTINGS, AND COUPLINGS. CONSTRUCT PER APPLICABLE TRENCHING DETAIL ON SHEET C1.3.
- (7) REMOVE EXISTING 4" PVC WATER LINE.
- (8) CONSTRUCT CONCRETE THRUST BLOCK PER DETAIL 8 HEREON.
- (9) CONSTRUCT 4" A.W.W.A. C900, CLASS 235, P.V.C. PIPE PER CORRESPONDING TRENCH DETAIL ON SHEET C1.3.
- (10) CONNECT TO EXISTING 4-INCH WATER LINE PER DETAIL 10 HEREON.
- (11) CONNECT TO EXISTING 4-INCH WATER LINE PER DETAIL 11 HEREON.
- (12) CONSTRUCT 1/2" SCH. 80 PVC PIPE, FITTINGS, AND COUPLINGS. CONSTRUCT PER APPLICABLE TRENCHING DETAIL ON SHEET C1.3.
- (13) CONNECT NEW 1/2" WATER TO EXISTING 4" WATER WITH SERVICE SADDLE (FORD 202BS OR APPROVED EQUAL). INSTALL 1/2" CORPORATION STOP (COMPRESSION TYPE), BALL TYPE, CS THREAD.

NOTE TO CONTRACTOR: BEFORE TRENCHING FOR WET AND DRY UTILITIES OCCURS, THE CONTRACTOR SHALL REVIEW THE PLANS TO DETERMINE WERE POSSIBLE UNDERGROUND CONFLICTS MAY OCCUR. PRESSURIZED WATER LINES CAN GO UNDER ELECTRICAL CONDUITS. GRAVITY BASED UTILITIES SHALL BE INSTALLED PER THE ELEVATIONS NOTED ON THE PLANS. CONTRACTOR SHALL NOTIFY ENGINEERS FOR UTILITY CONFLICT RESOLUTION WHEN DEEMED NECESSARY BY THE CONTRACTOR.

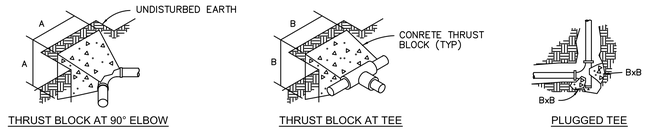

NOTE: THRUST BLOCKS SHALL NOT BE USED ON GATE VALVES WHICH ARE FLANGED TO TEES OR CROSSES WHICH HAVE THRUST BLOCKS.

PIPE SIZE (INCHES)	90° ELBOW	TEE / STUB	45° BEND	22.5° BEND	11.25° BEND
	A	B	C	D	E
2	17"	14"	13"	9"	6"
3	25"	21"	18"	13"	10"
4	34"	28"	25"	18"	13"

(8) CONCRETE THRUST BLOCK DETAIL
NOT TO SCALE

GENERAL NOTES:

1. ALL DUCTILE IRON FITTINGS BURIED UNDERGROUND SHALL BE PROTECTED WITH PLASTIC FILM WRAP IN ACCORDANCE WITH AWWA C105. WRAP SHALL BE A LOOSE 8"-MIL-THICK POLYETHYLENE TUBE. ALL JOINTS BETWEEN PLASTIC TUBES SHALL BE WRAPPED WITH 2-INCH-WIDE POLYETHYLENE ADHESIVE TAPE, POLYKEN 900, SCOTCH WRAP 50, OR APPROVED EQUAL.
2. THRUST BLOCK AREAS ARE BASED ON 200 PSI PRESSURE AND 1,000 PSF ALLOWABLE SOIL BEARING PRESSURE & SIZED PER N.F.P.A. 13, ANNEX A, TABLE A.10.8.2(a), 2016 EDITION.
3. ALL BOLTS AND STUDS SHALL BE TYPE 316 STAINLESS STEEL PER ASTM A193 GRADE B8M. NUTS AND WASHERS SHALL BE TYPE 316 STAINLESS STEEL PER ASTM A194 GRADE 8M.
4. THRUST BLOCKS SHALL BE INSTALLED AT EVERY CHANGE OF DIRECTION.
5. ALL THRUST BLOCKS SHOULD, WHERE POSSIBLE, BE PLACED AGAINST UNDISTURBED SOIL. WHERE IT IS NOT POSSIBLE TO PLACE THE BEARING SURFACE AGAINST UNDISTURBED SOIL, THE FILL BETWEEN THE BEARING SURFACE AND UNDISTURBED SOIL MUST BE COMPACTED TO AT LEAST 90% STANDARD PROCTOR DENSITY (PER N.F.P.A. 13, ANNEX A.10.8.2, 2013 EDITION. THEY SHALL BE CENTERED VERTICALLY AND HORIZONTALLY ABOUT THE DIRECTION OF THE THRUST.
6. THRUST BLOCKS SHALL BE CONCRETE CLASS 520-C-2500 PER THE STANDARD SPECIFICATIONS FOR PUBLIC WORKS CONSTRUCTION, LATEST EDITION, SECTION 201-1 WITH TYPE II CEMENT.
7. WHERE WATER MAIN DEAD ENDS ARE BLIND FLANGED OR CAPPED, THE THRUST BLOCK SHALL EXTEND A MINIMUM DISTANCE OF 6" INTO BOTH SIDES OF THE TRENCH.
8. CONCRETE POURED AGAINST PIPE FITTINGS SHALL BE PLACED SO THAT VALVES AND FITTINGS ARE ACCESSIBLE FOR REPAIR.
9. TIE BARS SHALL BE #4 REBAR (PER ASTM 767 AND D3963) OR STAINLESS STEEL WITH ACI HOOKED ENDS. WHEN TIE BARS ARE NOT EMBEDED IN CONCRETE THEY SHALL BE COATED WITH KOPPERS CO. BITUMASTIC NO. 50 OR EQUIVALENT.
10. ALL EXPOSED FLANGES AND OTHER METAL SURFACES AND ALL DAMAGED COATINGS SHALL BE COATED AFTER ASSEMBLY WITH A MASTIC, PER SPECIFICATIONS.
11. CONCRETE SHALL HAVE 3" MINIMUM CLEARANCE AROUND ALL JOINTS.

DOMESTIC WATER GENERAL NOTES:

1. LOCATION OF EXISTING UTILITIES SHOWN, HAVE BEEN DETERMINED FROM AVAILABLE INFORMATION. HOWEVER, IT SHALL BE THE RESPONSIBILITY OF THE CONTRACTOR TO DETERMINE THE TRUE LOCATION OF ANY EXISTING UTILITIES AND TO EXERCISE PROPER PRECAUTION TO AVOID INJURY OR DAMAGE THERETO.
2. STERILIZATION AND TESTING THE NEW INSTALLATION SHALL BE COMPLETED PRIOR TO MAKING FINAL CONNECTION TO THE SCHOOL'S SYSTEM. THE CONTRACTOR SHALL SEE THAT ALL VALVES IN THE SYSTEM REMAIN OPEN AFTER THE TEST.
3. WATER VALVE BOXES SHALL BE SET FLUSH WITH ULTIMATE FINISH SURFACE.
4. NEW ON-SITE WATER LINES, RUNNING PARALLEL WITH EXISTING OR NEW SEWER LINES, SHALL BE PLACED A MINIMUM OF 1 FOOT HORIZONTALLY & 1 FOOT HIGHER THAN SEWER.

SANITARY SEWER GENERAL NOTES

1. CLEANOUT LIDS SHALL BE SET FLUSH WITH ULTIMATE FINISH GRADE. CLEANOUTS SHALL BE INSTALLED AS SHOWN ON THE PLANS AND IN ACCORDANCE TO SECTIONS 707 AND 719 OF THE 2016 CALIFORNIA PLUMBING CODE.
2. THE CONTRACTOR SHALL VERIFY THE HORIZONTAL AND VERTICAL LOCATIONS OF ALL UTILITY CROSSINGS AND POINTS OF CONNECTION TO THE EXISTING SEWER SYSTEM PRIOR TO CONSTRUCTION OF THE SEWER LINES.
3. ALL SEWER MAINS, CLEANOUT, AND HOUSE CONNECTION LATERALS SHALL BE STAKED BY A LICENSED SURVEYOR IF SLOPE OF GRADE IS LESS THAN 2%, AND A COMPLETE SET OF CUT SHEETS SHALL BE SUPPLIED TO THE INSPECTOR.
4. NO FACILITY IS TO BE BACKFILLED UNTIL INSPECTED BY THE INSPECTOR.
5. IN ORDER TO PREVENT ACCIDENTAL USE OF THE NEW SEWER PRIOR TO COMPLETION AND ACCEPTANCE OF THE WORK, THE OUTLET OR INLET TO EXISTING TIE-IN CLEANOUT(S) SHALL BE SEALED WITH BROKEN BRICK AND MORTAR. INSTALLATION OF THESE PLUGS SHALL BE APPROVED BY THE INSPECTOR. PLUGS SHALL BE REMOVED ONLY AT THE DIRECTION OF INSPECTOR.
6. NEW SEWER LINES SHALL NOT BE CONNECTED TO THE EXISTING SEWER SYSTEM UNTIL THE NEW LINES HAVE BEEN TESTED PER SECTION 712.0 OF THE 2016 CALIFORNIA PLUMBING CODE. THE LINES SHALL BE TESTED AND CLEANED TO THE INSPECTORS APPROVAL BEFORE THEY ARE CONNECTED TO THE EXISTING SITE SEWER LINES.
7. AFTER PRESSURE TESTING AND CLEANING, BUT PRIOR TO FINAL ACCEPTANCE, SEWER LINES 4" AND ABOVE SHALL HAVE A VIDEOTAPE RECORD OF THEIR INTERIOR PERFORMED. TAPE SHALL BE DELIVERED TO THE INSPECTOR OF RECORD AT THE TIME OF TAPING.

(10) CUT-IN CONNECTION DETAIL
NOT TO SCALE

(11) CUT-IN CONNECTION DETAIL
NOT TO SCALE

CUT-IN TEE CONSTRUCTION NOTES:

* ALL BOLTS SHALL BE STAINLESS STEEL TYPE 316.

- (A) CONSTRUCT CONCRETE THRUST BLOCK PER DETAIL 8 HEREON.
- (B) INSTALL "EBAA IRON" 4" RESTRAINED FLANGE ADAPTER, SERIES 2104.
- (C) INSTALL 4" P.V.C. PRESSURE PIPE, A.W.W.A. C900, CL-235, MINIMUM LENGTH 18"
- (D) INSTALL 4" "SMITH-BLAIR" MODEL 411 STEEL COUPLING WITH 10" SLEEVE, OR APPROVED EQUAL.
- (E) INSTALL 4" DUCTILE IRON 90° BEND.
- (F) INSTALL 4" P.V.C. PRESSURE PIPE, A.W.W.A. C900, CL-235.

NOTE: MECHANICAL RESTRAINT DEVICES & COUPLINGS SHALL BE WRAPPED WITH 3 LAYERS OF 8-MIL POLYETHYLENE AFTER ASSEMBLY.

SEWER LINE STAKING NOTE

ALL SEWER LINES AND CLEANOUTS SHALL BE STAKED BY A LICENSED SURVEYOR IF SLOPE OF GRADE IS LESS THAN 2% AND A COMPLETE SET OF CUT SHEETS SHALL BE SUPPLIED TO THE INSPECTOR. ALL CONSTRUCTION STAKING SHALL BE INSTALLED AND VERIFIED FOR GRADE AND ALIGNMENT PRIOR TO THE START OF CONSTRUCTION.

TRENCHING NOTICE TO CONTRACTOR

POTABLE WATER PIPES SHALL NOT BE RUN OR LAID IN THE SAME TRENCH AS BUILDING SEWER UNLESS BOTH OF THE FOLLOWING CONDITIONS ARE MET PER 2016 CALIFORNIA PLUMBING CODE, SECTION 609.2:

THE BOTTOM OF THE WATER PIPE, AT ALL POINTS, SHALL BE AT LEAST TWELVE (12) INCHES ABOVE THE TOP OF THE SEWER LINE.

THE WATER PIPE SHALL BE PLACED ON A SOLID SHELF EXCAVATED AT ONE SIDE OF THE COMMON TRENCH WITH A MINIMUM CLEAR HORIZONTAL DISTANCE OF AT LEAST TWELVE (12) INCHES FROM THE SEWER.

10 5 0 10 20 30
SCALE: 1" = 10'

LEGEND:

- = EXISTING BUILDING
- = NEW BUILDING
- = NEW CONCRETE PAVING
- = NEW ASPHALT CONCRETE PAVING
- = EXISTING CONCRETE PAVING
- W — W — (E)DOMESTIC WATER
- S — S — (E)SANITARY SEWER
- G — G — (E)GAS
- E — E — (E)ELECTRICAL/POWER
- C — C — (E)COMMUNICATIONS

tBP architecture planning interiors
tBP/Architecture
4611 Teller Avenue
Newport Beach, CA 92660
ph: 949.673.0300 fx: 949.732.3895
LICENSED ARCHITECT — ALAN WING-CHI LEE — No. C34971 — STATE OF CALIFORNIA
architect

PLANS PREPARED BY:
FPL FPL and Associates, Inc.
Traffic • Transportation • Civil
30 Corporate Park, Suite 401
Irvine, CA 92606
PHONE: 949-252-1688
REGISTERED PROFESSIONAL ENGINEER — No. C 34971 — Exp. 09-30-17 — CIVIL — STATE OF CALIFORNIA
ALAN WING-CHI LEE — R.C.E. 34971 EXP. 09-30-17
consultant

FILE NO.:
IDENTIFICATION STAMP
DIVISION OF THE STATE ARCHITECT
DEPARTMENT OF GENERAL SERVICES
AC ____ FLS ____ SS ____
DATE ____

DEPARTMENT OF GENERAL SERVICES
DSA Los Angeles Regional Office
700 N. Alameda Street, Suite 5-500
Los Angeles, California 90012
ph: (213)897-3995 fx: (213)897-3159/0726

DUNSMORE ELEMENTARY SCHOOL RELOCATABLE CLASSROOMS

GLENDALE UNIFIED SCHOOL DISTRICT
4717 DUNSMORE AVE.
LA CRESCENTA, CA 91214

owner

tBP project number : 20967.00
file name:
drawn by: checked by:
date: March 2017

Rev:	date:	description:

THIS DRAWING AND THE DESIGNS, DEPICTIONS, IDEAS AND OTHER INFORMATION CONTAINED HEREIN CONSTITUTE UNPUBLISHED WORK OF tBP/ARCHITECTURE AND SHALL REMAIN THE PROPERTY OF tBP/ARCHITECTURE IN PERPETUITY. NO PART THEREOF SHALL BE REPRODUCED, DISCLOSED, DISTRIBUTED, SOLD, PUBLISHED OR OTHERWISE USED IN ANY WAY WITHOUT THE ADVANCED EXPRESS WRITTEN CONSENT OF tBP/ARCHITECTURE.

drawing title:

SITE UTILITY PLAN

drawing no.:

C1.4

drawing of

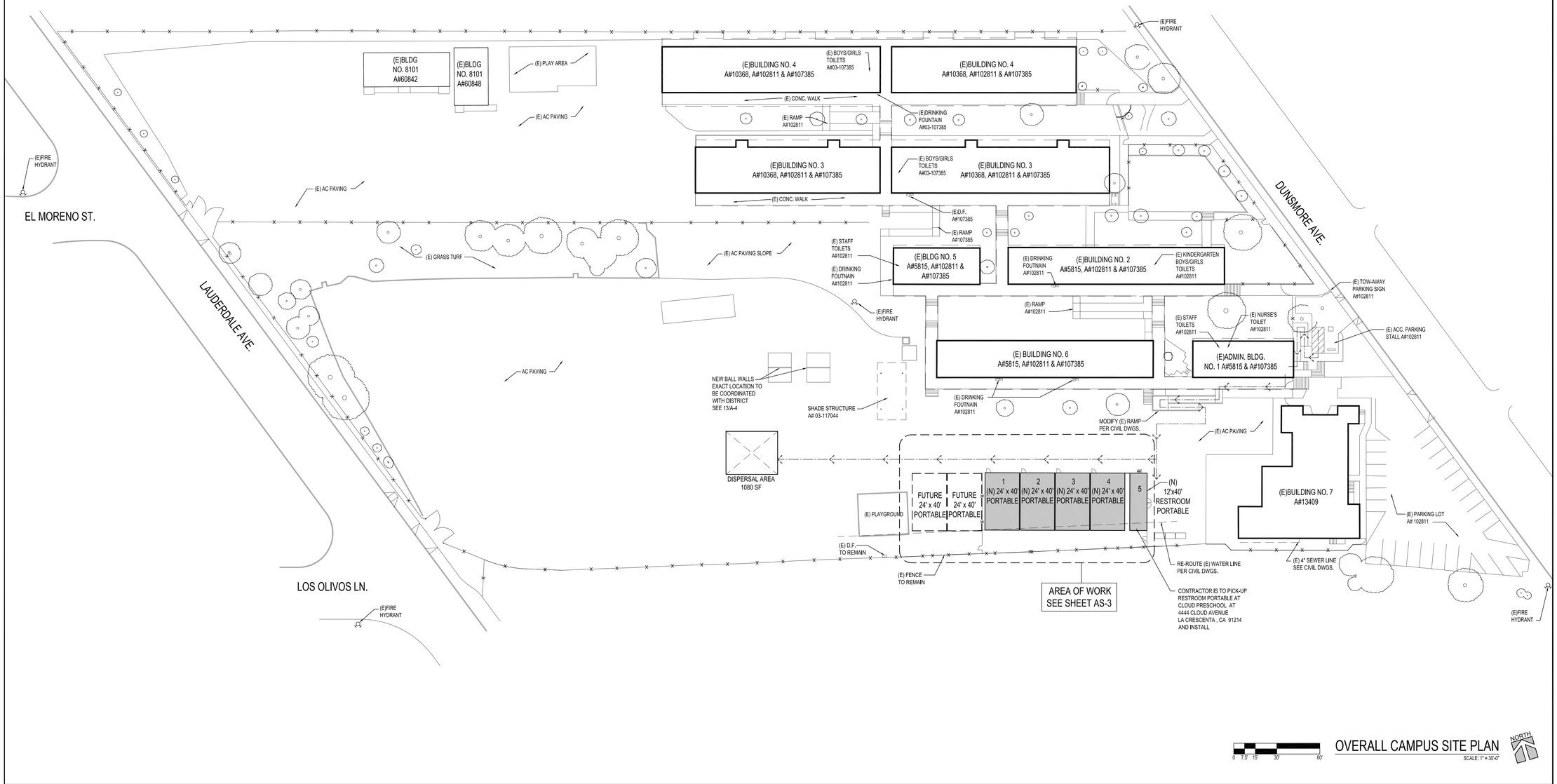

OVERALL CAMPUS SITE PLAN

SCALE: 1" = 30'-0"

TEST & INSPECTION REQUIREMENTS (TITLE 24 PART 2 2016 CBC)

CHAPTER 22A STEEL

MATERIALS
- STRUCTURAL STEEL - PER 2205A.1
- COLD FORMED STEEL - PER 2210A.1

QUALITY
- TEST OF STRUCTURAL & COLD FORMED STEEL - PER 2211A.1

INSPECTION
- SHOP FABRICATED - PER 1704A2.5, 1705A.2

CHAPTER 20

WELDING - PER 1705A2.2.1

GENERAL NOTES

1. LOCATIONS OF ALL UTILITIES SHOWN ARE APPROXIMATE. CONTRACTOR SHALL EXERCISE EXTREME CAUTION IN EXCAVATING AND TRENCHING TO AVOID INTERCEPTING EXISTING PIPING OR CONDUITS. THE ARCHITECT IS NOT RESPONSIBLE FOR THE LOCATION OF UNDERGROUND UTILITIES OR STRUCTURES WHETHER OR NOT SHOWN OR DETAILED AND INSTALLED BY OTHER CONTRACTS. THE CONTRACTOR SHALL IMMEDIATELY NOTIFY THE OWNER SHOULD SUCH UNIDENTIFIED CONDITIONS BE DISCOVERED. THESE DRAWING DO NOT INCLUDE NECESSARY COMPONENTS FOR CONSTRUCTION SAFETY.

2. VERIFY ALL EXISTING AND FINISH GRADES, DIMENSIONS AND SITE CONDITIONS BEFORE COMMENCING WORK AND REPORT ANY DISCREPANCIES TO THE ARCHITECT.

FLOOD DESIGN INFORMATION

THE FLOOD ZONE DESIGNATION	ZONE X
THE FLOOD INSURANCE RATE MAP (FIRM) PANEL DESIGNATION	06037C1335F
EFFECTIVE DATE OF THE FIRM	09-26-2008
BASE FLOOD ELEVATION (BFE)	N/A
APPLICABLE COMMUNITY ORDINANCE SECTION	N/A

PARKING TABULATION

PARKING LOT :	26 PARKING STALLS 1 ACCESSIBLE PARKING STALL

SITE PLAN LEGEND

PATH OF TRAVEL

DESIGN PROFESSIONAL IN GENERAL RESPONSIBLE CHARGE STATEMENT: THE POT IDENTIFIED IN THESE CONSTRUCTION DOCUMENTS IS COMPLIANT WITH THE CURRENT APPLICABLE CALIFORNIA BUILDING CODE ACCESSIBILITY PROVISIONS FOR THE PATH OF TRAVEL REQUIREMENTS FOR ALTERATIONS, ADDITIONS AND STRUCTURAL REPAIRS. AS PART OF THE DESIGN OF THIS PROJECT, THE POT WAS EXAMINED AND ANY ELEMENTS, COMPONENTS OR PORTIONS OF THE POT THAT WERE DETERMINED TO BE NONCOMPLIANT 1) HAVE BEEN IDENTIFIED AND 2) THE CORRECTIVE WORK NECESSARY TO BRING THEM INTO COMPLIANCE HAS BEEN INCLUDED WITHIN THE SCOPE OF THIS PROJECT'S WORK THROUGH DETAILS, DRAWINGS AND SPECIFICATIONS INCORPORATED INTO THESE CONSTRUCTION DOCUMENTS. ANY NONCOMPLIANT ELEMENTS, COMPONENTS OR PORTIONS OF THE POT THAT WILL NOT BE CORRECTED BY THIS PROJECT BASED ON VALUATION THRESHOLD LIMITATIONS OR A FINDING OF UNREASONABLE HARDSHIP ARE SO INDICATED IN THESE CONSTRUCTION DOCUMENTS. ARCHITECT HAS VERIFIED P.O.T. IS BARRIER FREE.

DURING CONSTRUCTION, IF POT ITEMS WITHIN THE SCOPE OF THE PROJECT REPRESENTED AS CODE COMPLIANT ARE FOUND TO BE NONCONFORMING BEYOND REASONABLE CONSTRUCTION TOLERANCES, THEY SHALL BE BROUGHT INTO COMPLIANCE WITH THE CBC AS PART OF THIS PROJECT BY MEANS OF A CONSTRUCTION CHANGE DOCUMENT.

PATH OF TRAVEL (P.O.T.) AS VERIFIED BY ARCHITECT IS :
- A COMMON BARRIER FREE ACCESSIBLE ROUTE AT LEAST 48" WIDE WITHOUT ANY ABRUPT VERTICAL CHANGED EXCEEDING 1/2" BEVELED AT 1:2 MAXIMUM SLOPE. EXCEPT THAT LEVEL CHANGES DO NOT EXCEED 1/4" VERTICAL.
- THE PATH SURFACE IS SLIP RESISTANT, STABLE , FIRM AND SMOOTH.
- PASSING SPACES AT LEAST 60"X60" ARE LOCATED NOT MORE THAN 200' APART.
- CONTINUOUS GRADIENTS HAVE 60' LEVEL AREAS NOT MORE THAN 400' APART.
- CROSS-SLOPE DOES NOT EXCEED 2%.
- SLOPE IN THE DIRECTION OF TRAVEL IS LESS THAN 5%, UNLESS OTHERWISE INDICATED AS A RAMP.
- MAINTAIN POT FREE OF OVERHANGING OBSTRUCTIONS TO 80" MINIMUM, PROTRUDING OBJECTS GREATER THAN 4". PROJECTION FROM WALL OR EDGE AND 27" ABOVE FINISH GRADE.

SHADED AREA INDICATES AREA OF NEW WORK

tBP architecture planning interiors

tBP/Architecture
4611 Teller Avenue
Newport Beach, CA 92660
ph: 949.673.0300 fx: 949.732.3895

architect

consultant

FILE NO.:
IDENTIFICATION STAMP
DIVISION OF THE STATE ARCHITECT
DEPARTMENT OF GENERAL SERVICES
AC ____ FLS ____ SS ____
DATE ____

DEPARTMENT OF GENERAL SERVICES
DSA Los Angeles Regional Office
700 N. Alameda Street, Suite 5-500
Los Angeles, California 90012
ph: (213)897-3995 fx: (213)897-3159/0726

DUNSMORE ELEMENTARY SCHOOL RELOCATABLE CLASSROOMS

GLENDALE UNIFIED SCHOOL DISTRICT
4717 DUNSMORE AVE.
LA CRESCENTA, CA 91214

owner

tBP project number : 20967.00

file name:

drawn by: checked by:

date: April 21, 2017

Rev:	date:	description:

THIS DRAWING AND THE DESIGNS, DEPICTIONS, IDEAS AND OTHER INFORMATION CONTAINED HEREIN CONSTITUTE UNPUBLISHED WORK OF tBPARCHITECTURE AND SHALL REMAIN THE PROPERTY OF tBPARCHITECTURE IN PERPETUITY. NO PART THEREOF SHALL BE REPRODUCED, DISCLOSED, DISTRIBUTED, SOLD, PUBLISHED OR OTHERWISE USED IN ANY WAY WITHOUT THE ADVANCED EXPRESS WRITTEN CONSENT OF tBPARCHITECTURE.

drawing title:
OVERALL CAMPUS SITE PLAN

drawing no.:
AS-1
drawing of

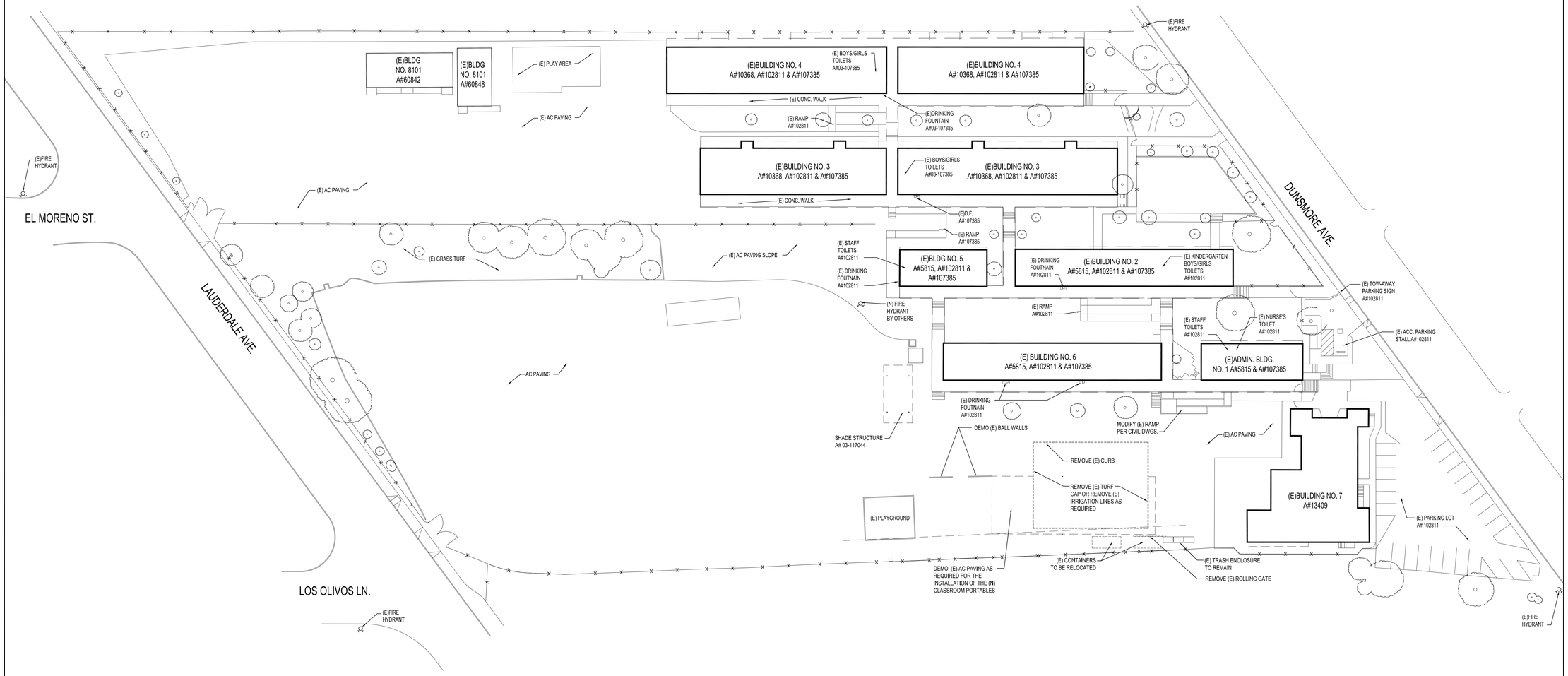

OVERALL CAMPUS SITE DEMOLITION PLAN

SCALE: 1" = 30'-0"

GENERAL NOTES

1. WHERE DEMOLITION OR REMOVAL WORK OCCURS, TAKE ALL NECESSARY PRECAUTIONS TO PROTECT ELEMENTS TO REMAIN. FINISHED WORK DAMAGED BY OPERATIONS UNDER DEMOLITION CONTRACT SHALL BE REPAIRED OR REPLACED TO THE SATISFACTION OF OWNER AND ARCHITECT AT NO ADDITIONAL COST TO THE OWNER.
2. DISPOSITION OF MATERIALS: PROMPTLY REMOVE FROM THE SITE ALL MATERIALS RESULTING FROM DEMOLITION WHICH ARE NOT TO BE REUSED.
3. COORDINATE REMOVAL OF ALL ELECTRICAL FIXTURES, CONDUIT, AND JUNCTION BOXES WITH ELECTRICAL CONTRACTOR.
4. REFER TO CIVIL AND UTILITY PLANS FOR ADDITIONAL DEMOLITION WORK AND COORDINATION FOR TERMINATION POINTS OF UTILITIES.
5. ALL DEMOLITION SHALL COMPLY WITH CH. 34 OF THE CBC AND ARTICLE 87 CFC.
7. WHERE AN EXISTING REQUIRED FIRE PROTECTION SYSTEM WILL BE TEMPORARILY OUT OF SERVICE DUE TO CONSTRUCTION ACTIVITIES, COMPLY WITH CFC SECTIONS 1408 AND 901.

tBP
architecture
planning
interiors

LICENSED ARCHITECT C. CERRO NO. 32425 STATE OF CALIFORNIA

tBP/Architecture
4611 Teller Avenue
Newport Beach, CA 92660
ph: 949.673.0300 fx: 949.732.3895

architect

consultant

FILE NO.:
IDENTIFICATION STAMP
DIVISION OF THE STATE ARCHITECT
DEPARTMENT OF GENERAL SERVICES
AC ____ FLS ____ SS ____
DATE ____

DEPARTMENT OF GENERAL SERVICES
DSA Los Angeles Regional Office
700 N. Alameda Street, Suite 5-500
Los Angeles, California 90012
ph: (213)897-3995 fx: (213)897-3159/0726

DUNSMORE ELEMENTARY SCHOOL RELOCATABLE CLASSROOMS

GLENDALE UNIFIED SCHOOL DISTRICT
4717 DUNSMORE AVE.
LA CRESCENTA, CA 91214

owner

tBP project number : 20967.00
file name:
drawn by: checked by:
date: April 21, 2017

Rev:	date:	description:

THIS DRAWING AND THE DESIGNS, DEPICTIONS, IDEAS AND OTHER INFORMATION CONTAINED HEREIN CONSTITUTE UNPUBLISHED WORK OF tBP/ARCHITECTURE AND SHALL REMAIN THE PROPERTY OF tBP/ARCHITECTURE IN PERPETUITY. NO PART THEREOF SHALL BE REPRODUCED, DISCLOSED, DISTRIBUTED, SOLD, PUBLISHED OR OTHERWISE USED IN ANY WAY WITHOUT THE ADVANCED EXPRESS WRITTEN CONSENT OF tBP/ARCHITECTURE.

drawing title:
OVERALL CAMPUS SITE DEMOLITION PLAN

drawing no.:
AS-2
drawing of

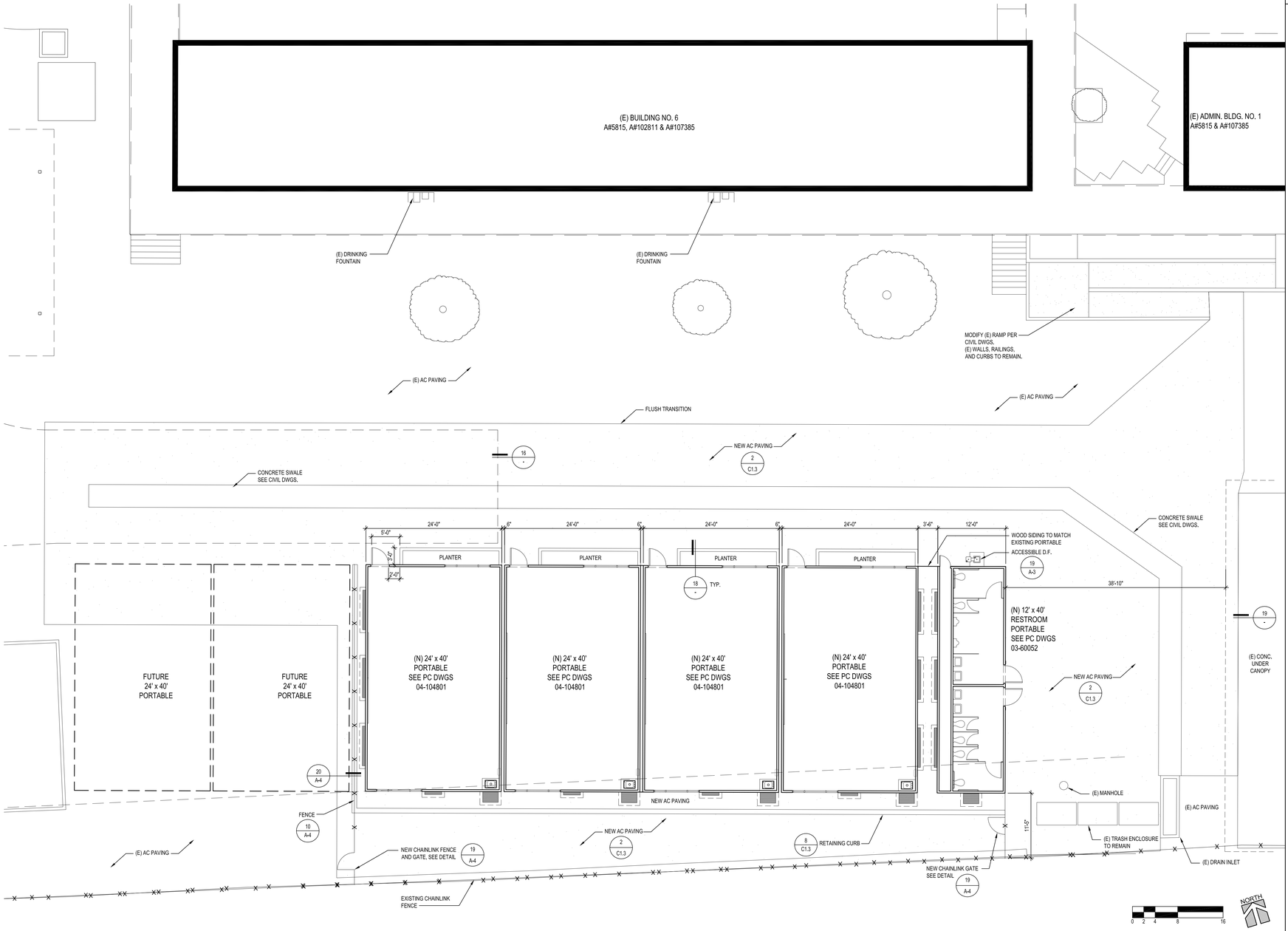

ENLARGED SITE PLAN — SCALE: 1/8"=1'-0" — 1

GENERAL NOTES

1. DETERIORATION OR EXISTING NON-COMPLIANT CONSTRUCTION:
   IF ANY CONDITION IS DISCOVERED WHICH, IF LEFT UNCORRECTED, WOULD MAKE THE BUILDING NON-COMPLIANT WITH THE REQUIREMENTS OF THE EDITION OF THE CBC IN FORCE AT THE TIME OF ORIGINAL CONSTRUCTION, THE CONDITION MUST BE CORRECTED IN ACCORDANCE WITH CURRENT CODE REQUIREMENTS. A CHANGE ORDER, OR A SEPARATE SET OF PLANS AND SPECIFICATIONS DETAILING AND SPECIFYING THE REQUIRED REPAIR WORK SHALL BE SUBMITTED TO AND APPROVED BY DSA BEFORE PROCEEDING WITH THE REPAIR WORK.
2. VERIFY ALL EXISTING AND FINISH GRADES, DIMENSIONS AND SITE CONDITIONS BEFORE COMMENCING WORK AND REPORT ANY DISCREPANCIES TO THE ARCHITECT.
3. LOCATIONS OF ALL UTILITIES SHOWN ARE APPROXIMATE. CONTRACTOR SHALL EXERCISE EXTREME CAUTION IN EXCAVATING AND TRENCHING TO AVOID INTERCEPTING EXISTING PIPING OR CONDUITS. THE ARCHITECT IS NOT RESPONSIBLE FOR THE LOCATION OF UNDERGROUND UTILITIES OR STRUCTURES WHETHER OR NOT SHOWN OR DETAILED AND INSTALLED BY OTHER CONTRACTS. THE CONTRACTOR SHALL IMMEDIATELY NOTIFY THE OWNER SHOULD SUCH UNIDENTIFIED CONDITIONS BE DISCOVERED.
4. SEE T-2 FOR EXISTING MODULAR BUILDING INFORMATION
4. SEE CIVIL DRAWING FOR ADDITIONAL GRADING INFORMATION

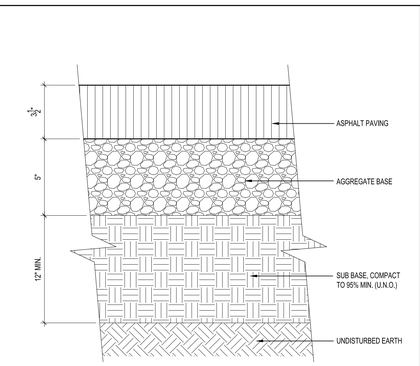

A.C. PAVING - FIRE LANE — SCALE: 3" = 1'-0" — 16

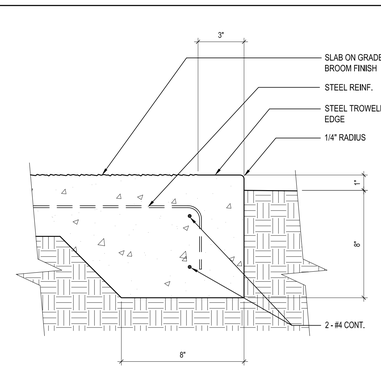

TYPICAL SLAB EDGE — SCALE: 3" = 1'-0" — 17

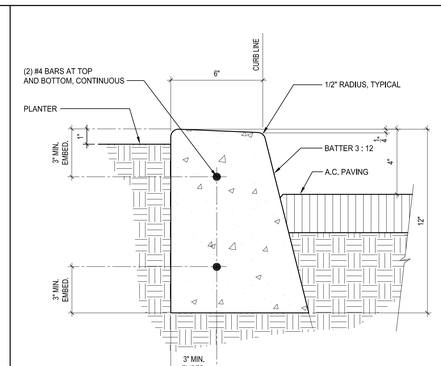

CONCRETE CURB / PLANTER — SCALE: 3" = 1'-0" — 18

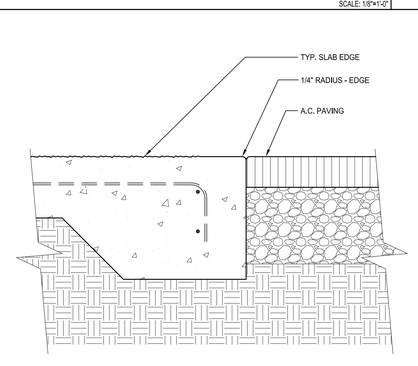

EDGE OF CONCRETE PAVING @ A.C. PAVING — SCALE: 3" = 1'-0" — 19

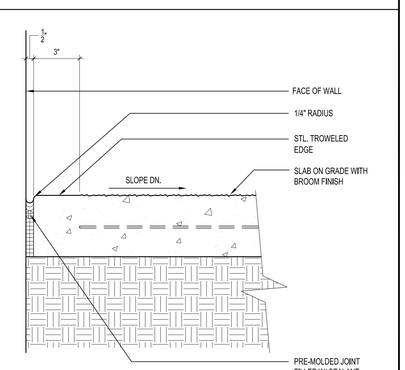

EDGE OF SLAB @ BLDG FACE — SCALE: 3" = 1'-0" — 20

tBP architecture planning interiors

tBP/Architecture
4611 Teller Avenue
Newport Beach, CA 92660
ph: 949.673.0300 fx: 949.732.3895

architect

consultant

DEPARTMENT OF GENERAL SERVICES
DSA Los Angeles Regional Office
700 N. Alameda Street, Suite 5-500
Los Angeles, California 90012
ph: (213)897-3995 fx: (213)897-3159/0726

FILE NO.:
IDENTIFICATION STAMP
DIVISION OF THE STATE ARCHITECT
DEPARTMENT OF GENERAL SERVICES
AC ____ FLS ____ SS ____
DATE ____

DUNSMORE ELEMENTARY SCHOOL RELOCATABLE CLASSROOMS

GLENDALE UNIFIED SCHOOL DISTRICT
4717 DUNSMORE AVE.
LA CRESCENTA, CA 91214

owner

tBP project number : 20967.00
file name:
drawn by: checked by:
date: April 21, 2017

Rev:	date:	description:

THIS DRAWING AND THE DESIGNS, DEPICTIONS, IDEAS AND OTHER INFORMATION CONTAINED HEREIN CONSTITUTE UNPUBLISHED WORK OF tBP/ARCHITECTURE AND SHALL REMAIN THE PROPERTY OF tBP/ARCHITECTURE IN PERPETUITY. NO PART THEREOF SHALL BE REPRODUCED, DISCLOSED, DISTRIBUTED, SOLD, PUBLISHED OR OTHERWISE USED IN ANY WAY WITHOUT THE ADVANCED EXPRESS WRITTEN CONSENT OF tBP/ARCHITECTURE.

drawing title:
ENLARGED SITE PLAN

drawing no.:
AS-3
drawing of

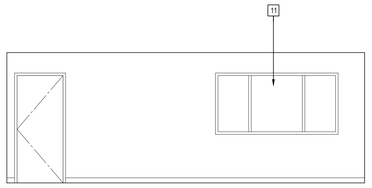

1
01

01 2

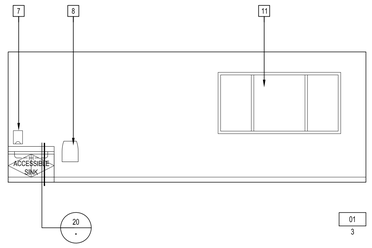

01
3

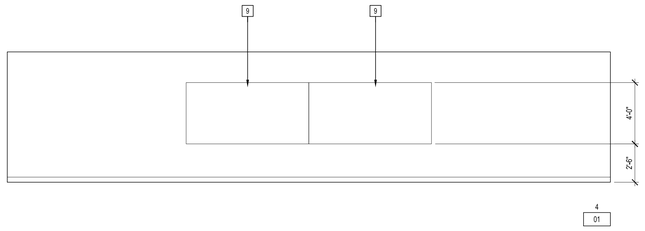

4
01

PORTABLE INTERIOR ELEVATION

SCALE: 1/4"=1'-0" | 2

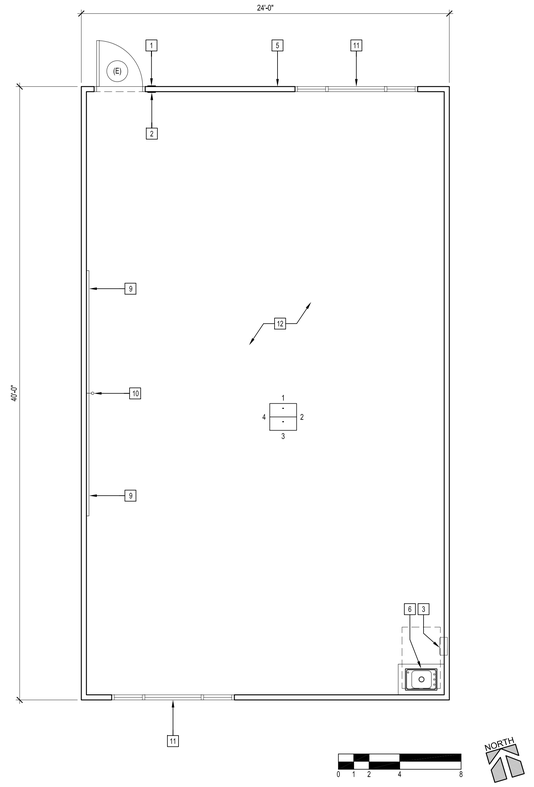

PORTABLE FLOOR PLAN

SCALE: 1/4"=1'-0" | 1

KEYNOTES

#	
1	ROOM NAME / NUMBER SIGN - SEE DETAIL 14 / A-3
2	TACTILE "EXIT" SIGN - SEE DETAIL 15 / A-3
3	FIRE EXTINGUISHER - 5 LBS DRY CHEMICAL WQA-10BC U.L. RATING ON WALL MOUNTED BRACKET @ +40" A.F.F. TO HANDLE, 4" MAX PROJECTION
4	NOT USED
5	EXISTING MODULAR BUILDING WALL
6	COUNTERTOP MOUNTED SINK WITH BUBBLER - BY PORTABLE MANUFACTURER
7	SOAP DISPENSER - DISTRICT PROVIDED
8	PAPER TOWEL DISPENSER - DISTRICT PROVIDED
9	4'X8' MARKERBOARD - BY PORTABLE MANUFACTURER
10	EPSON PROJECTOR - DISTRICT PROVIDED, CONTRACTOR INSTALLED
11	EXISTING WINDOW TO REMAIN
12	VCT FLOORING - BY PORTABLE MANUFACTURER

GENERAL NOTES

1. ALL INTERIOR FINISHES (FLOOR, WALL AND CEILING WILL BE PROVIDED BY THE PORTABLE MANUFACTURER UNLESS OTHERWISE NOTED.

NOTES

1. FAUCET CONTROLS AND OPERATING MECHANISMS SHALL BE OPERABLE WITH ONE HAND AND SHALL NOT REQUIRE TIGHT GRASPING, PINCHING OR TWISTING OF THE WRIST. THE FORCE REQUIRED TO ACTIVATE CONTROLS SHALL BE NO MORE THAN 5 LBS. LEVER OPERATED, PUSH TYPE AND ELECTRONICALLY CONTROLLED MECHANISMS ARE ACCEPTABLE. SELF CLOSING VALVES ARE ALLOWED IF THE FAUCET REMAINS OPEN FOR AT LEAST 10 SECONDS.

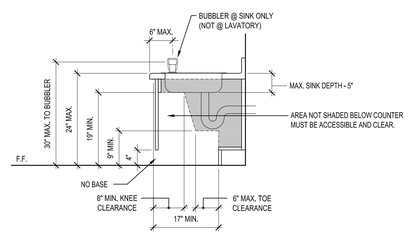

ACCESSIBLE SINK / LAVATORY

SCALE: 3/4" = 1'-0" | 20

tBP architecture planning interiors

tBP/Architecture
4611 Teller Avenue
Newport Beach, CA 92660
ph: 949.673.0300 fx: 949.732.3895

architect

consultant

DEPARTMENT OF GENERAL SERVICES
DSA Los Angeles Regional Office
700 N. Alameda Street, Suite 5-500
Los Angeles, California 90012
ph: (213)897-3995 fx: (213)897-3159/0726

FILE NO.:
IDENTIFICATION STAMP
DIVISION OF THE STATE ARCHITECT
DEPARTMENT OF GENERAL SERVICES
AC _____ FLS _____ SS _____
DATE _____

DUNSMORE ELEMENTARY SCHOOL RELOCATABLE CLASSROOMS

GLENDALE UNIFIED SCHOOL DISTRICT
4717 DUNSMORE AVE.
LA CRESCENTA, CA 91214

owner

tBP project number : 20967.00

file name:

drawn by: checked by:

date: April 21, 2017

Rev:	date:	description:

THIS DRAWING AND THE DESIGNS, DEPICTIONS, IDEAS AND OTHER INFORMATION CONTAINED HEREIN CONSTITUTE UNPUBLISHED WORK OF tBP/ARCHITECTURE AND SHALL REMAIN THE PROPERTY OF tBP/ARCHITECTURE IN PERPETUITY. NO PART THEREOF SHALL BE REPRODUCED, DISCLOSED, DISTRIBUTED, SOLD, PUBLISHED OR OTHERWISE USED IN ANY WAY WITHOUT THE ADVANCED EXPRESS WRITTEN CONSENT OF tBP/ARCHITECTURE.

drawing title:
PORTABLE FLOOR PLAN

drawing no.:
A-1
drawing of

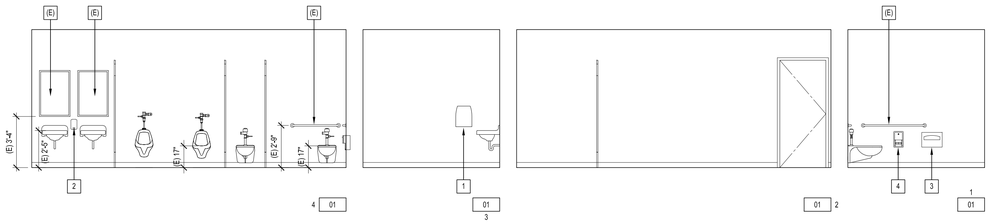

BOYS RESTROOM INTERIOR ELEVATION — SCALE: 1/8"=1'-0" — 3

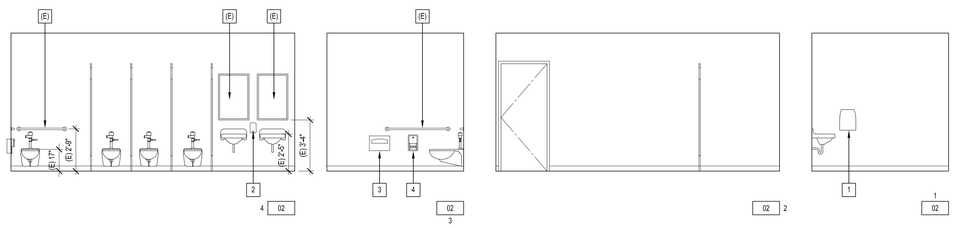

GIRLS RESTROOM INTERIOR ELEVATION — SCALE: 1/8"=1'-0" — 4

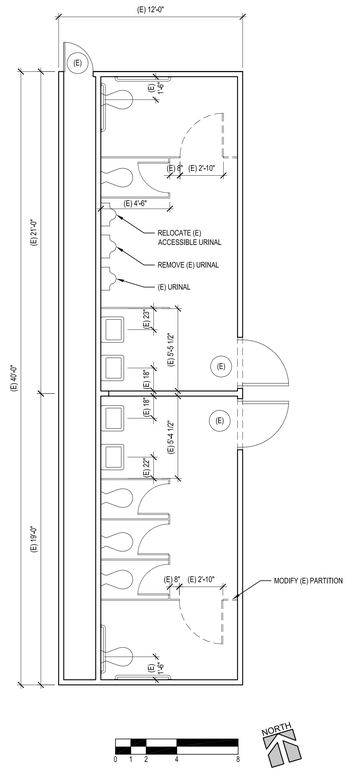

DEMO. RESTROOM FLOOR PLAN — SCALE: 1/8"=1'-0" — 2

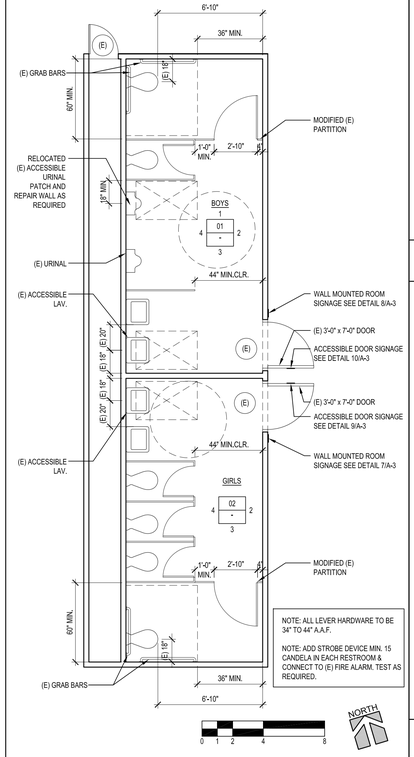

RESTROOM FLOOR PLAN — SCALE: 1/8"=1'-0" — 1

TOILET ACCESSORY KEYNOTES

1	SURFACE MOUNTED PAPER TOWEL DISPENSER - DISTRICT PROVIDED
2	SOAP DISPENSER, SURFACE-MOUNTED - DISTRICT PROVIDED
3	SEAT COVER DISPENSER, SURFACE-MOUNTED - DISTRICT PROVIDED
4	TOILET TISSUE DISPENSER, MULTI-ROLL, RECESSED - DISTRICT PROVIDED

RESTROOM PORTABLE NOTES

1. ALL FINISHES (FLOOR, WALL AND CEILINGS TO BE REPLACED WITH NEW LIKE IN KIND UNLESS OTHERWISE NOTED.
2. MODIFY EXISTING TOILET PARTITIONS AS REQUIRED PER THE DIMENSIONS NOTED ON THE PLANS.

TOILET ACCESSORY MOUNTING HEIGHTS (ADULT)

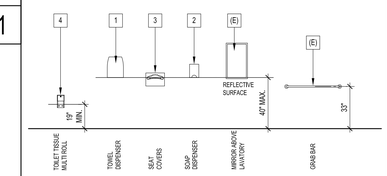

NOTES:

1. MOUNTING HEIGHTS SHOWN ARE TYPICAL, UNLESS OTHERWISE NOTED.
2. ALL ACCESSORIES SHALL BE DISABLED ACCESSIBLE WITH A MAXIMUM REACH HEIGHT OF 40" ABOVE FINISH FLOOR, UNLESS NOTED OTHERWISE.
3. SLOPE FLOORS 1/8" PER FOOT MINIMUM AND 1/4" PER FOOT MAXIMUM, UNLESS NOTED OTHERWISE.
4. SEE ENLARGED TOILET PLAN AND INTERIOR ELEVATION DRAWINGS FOR TOILET ACCESSORY LOCATIONS

TOILET FIXTURE MOUNTING HEIGHTS (ADULT)

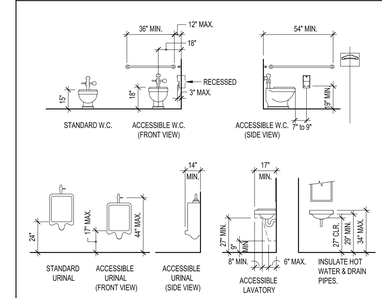

CLEARANCES OF FIXTURES & ACCESSORIES TO FINISHED SURFACE

	ADULT	ELEMENTARY	KINDERGARTEN
TOILET CENTERLINE FROM WALL	16" to 18"	SEE ADULT	12"
TOILET SEAT HEIGHT (AT SEAT LID)	18"	SEE ADULT	10" - 12"
GRAB BAR HEIGHT (SIDE)	33"	SEE ADULT	20" - 22"
TOILET PAPER IN FRONT OF TOILET	7" to 9"	SEE ADULT	6" MAX.
NAPKIN DISPOSAL IN FRONT OF TOILET	12" MAX.	-	-
DISPENSER OR MIRROR HEIGHT	40" MAX.	36" MAX.	32" MAX.
LAVATORY/SINK TOP HEIGHT	34" MAX.	29" MAX.	24" MAX.
LAVATORY/SINK KNEE CLEARANCE	27" MIN.	24" MIN.	19" MIN.
APRON CLEARANCE	29" MIN.	-	-
URINAL LIP HEIGHT	17" MAX.	15" MAX.	13" MAX.
URINAL FLUSH HANDLE HEIGHT	44" MAX.	37" MAX.	32" MAX.
DRINKING FOUNTAIN BUBBLER HEIGHT	36" MAX.	32" MAX.	30" MAX.
DRINKING FOUNTAIN KNEE CLEARANCE	27" MIN.	24" MIN.	22" MIN.
RAMP/STAIR HANDRAIL HEIGHT	34" - 38"	-	-

tBP architecture planning interiors

LICENSED ARCHITECT ROBERT L. CHENG No. C34453 STATE OF CALIFORNIA

tBP/Architecture
4611 Teller Avenue
Newport Beach, CA 92660
ph: 949.673.0300 fx: 949.732.3895

architect

consultant

DEPARTMENT OF GENERAL SERVICES
DSA Los Angeles Regional Office
700 N. Alameda Street, Suite 5-500
Los Angeles, California 90012
ph: (213)897-3995 fx: (213)897-3159/0726

FILE NO.:
IDENTIFICATION STAMP
DIVISION OF THE STATE ARCHITECT
DEPARTMENT OF GENERAL SERVICES
AC _____ FLS _____ SS _____
DATE _____

DUNSMORE ELEMENTARY SCHOOL RELOCATABLE CLASSROOMS

GLENDALE UNIFIED SCHOOL DISTRICT
4717 DUNSMORE AVE.
LA CRESCENTA, CA 91214

owner

tBP project number : 20967.00

file name:

drawn by: checked by:

date: April 21, 2017

Rev:	date:	description:

THIS DRAWING AND THE DESIGNS, DEPICTIONS, IDEAS AND OTHER INFORMATION CONTAINED HEREIN CONSTITUTE UNPUBLISHED WORK OF tBP/ARCHITECTURE AND SHALL REMAIN THE PROPERTY OF tBP/ARCHITECTURE IN PERPETUITY. NO PART THEREOF SHALL BE REPRODUCED, DISCLOSED, DISTRIBUTED, SOLD, PUBLISHED OR OTHERWISE USED IN ANY WAY WITHOUT THE ADVANCED EXPRESS WRITTEN CONSENT OF tBP/ARCHITECTURE.

drawing title:
RESTROOM PORTABLE FLOOR PLAN

drawing no.:
A-2
drawing of

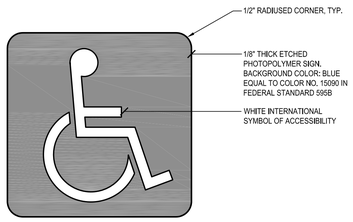

NOTES:

1) THE CHARACTERS AND BACKGROUND OF THE SIGN SHALL BE EGGSHELL, MATTE, OR OTHER NON-GLARE FINISH AND CHARACTERS SHALL CONTRAST WITH THEIR BACKGROUND.

2) MOUNT WITH 3M HIGH BOND TAPE AND SILICONE GLUE.

3) SEE 4 / - FOR LOCATION.

INTERNATIONAL SYMBOL OF ACCESSIBILITY — SCALE: HALF — 3

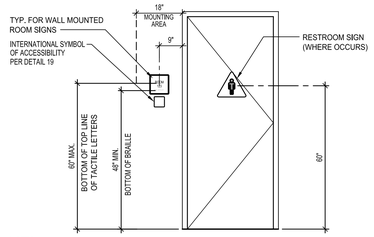

NOTES:

MOUNT SIGN ON THE WALL ADJACENT TO LATCH SIDE OF DOOR. WHERE THERE IS NO WALL SPACE ON LATCH SIDE OF DOOR, PLACE SIGNS ON NEAREST ADJACENT WALL, PREFERABLY ON THE RIGHT.

SIGNAGE LOCATION LEGEND — SCALE: 1/2" = 1'-0" — 4

TYPICAL SIGNAGE NOTES

1. TACTILE CHARACTER TYPE: TACTILE CHARACTERS ON SIGNS SHALL BE RAISED 1/32" MINIMUM AND SHALL BE SANS SERIF UPPERCASE CHARACTERS ACCOMPANIED BY CONTRACTED (GRADE 2) BRAILLE. CBC SECTION 11B-703.2.

2. TACTILE CHARACTER SIZE: RAISED CHARACTERS SHALL BE A MINIMUM OF 5/8" AND A MAXIMUM OF 2" HIGH. CBC SECTION 11B-703.2.

3. FINISH AND CONTRAST: CONTRAST BETWEEN CHARACTERS, SYMBOLS AND THEIR BACKGROUND MUST BE 70% MINIMUM AND HAVE A NON-GLARE FINISH. CBC SECTION 11B-703.2.

4. PROPORTIONS: RAISED CHARACTERS ON SIGNS SHALL BE SELECTED FROM FONTS WHERE THE WIDTH OF THE UPPERCASE LETTER "O" IS 60% MINIMUM AND 110% MAXIMUM OF THE HEIGHT OF THE UPPERCASE LETTER "I". STROKE THICKNESS OF THE UPPERCASE LETTER "I" SHALL BE 15% MAXIMUM OF THE HEIGHT OF THE CHARACTER. CBC SECTION 11B-703.2.

5. BRAILLE: CONTRACTED (GRADE 2) BRAILLE SHALL BE USED WHEREVER BRAILLE IS REQUIRED IN OTHER PORTIONS OF THESE STANDARDS. DOTS SHALL BE 1/10" ON CENTERS IN EACH CELL WITH 2/10" SPACE BETWEEN CELLS, MEASURED FROM THE SECOND COLUMN OF DOTS IN THE FIRST CELL TO THE FIRST COLUMN OF DOTS IN THE SECOND CELL. DOTS SHALL BE RAISED A MINIMUM OF 1/40" ABOVE THE BACKGROUND. BRAILLE DOTS SHALL BE DOMED OR ROUNDED. CBC SECTION 11B-703.3.

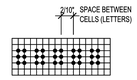

1/10" BY 1/10" GRID

CALIFORNIA GRADE 2 BRAILLE SHALL BE USED WHEREVER BRAILLE IS REQUIRED. INDIVIDUAL BRAILLE DOTS SHALL EACH BE DISTINCT AND SEPARATE. EACH DOT SHALL BE ROUNDED OR DOMED IN LIEU OF SQUARE SIDED AND FLAT TOPPED.

6. MOUNTING HEIGHT AND LOCATION: SIGNS WITH RAISED CHARACTERS AND BRAILLE SHALL BE LOCATED 48" MINIMUM TO THE BASELINE OF THE LOWEST LINE OF BRAILLE AND 60" MAXIMUM TO THE BASELINE OF THE HIGHEST LINE OF RAISED CHARACTERS ABOVE THE FINISH FLOOR OR GROUND SURFACE. MOUNTING LOCATION SHALL BE DETERMINED SO THAT A PERSON MAY APPROACH WITHIN 3" OF SIGNAGE WITHOUT ENCOUNTERING PROTRUDING OBJECTS OR STANDING WITHIN THE SWING OF A DOOR. CBC SECTION 11B-703.4.

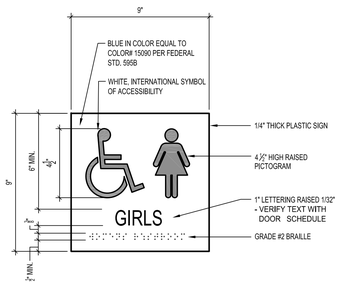

WALL-MOUNTED TOILET ROOM SIGNAGE — SCALE: 3" = 1'-0" — 7

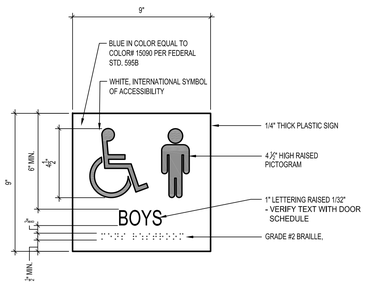

WALL-MOUNTED TOILET ROOM SIGNAGE — SCALE: 3" = 1'-0" — 8

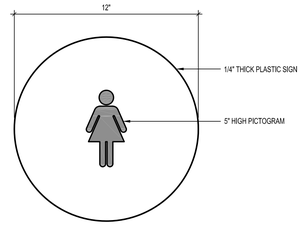

DOOR-MOUNTED TOILET RM. SIGNAGE — SCALE: 3" = 1'-0" — 9

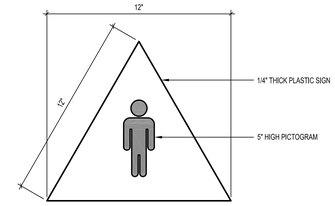

DOOR-MOUNTED TOILET RM. SIGNAGE — SCALE: 3" = 1'-0" — 10

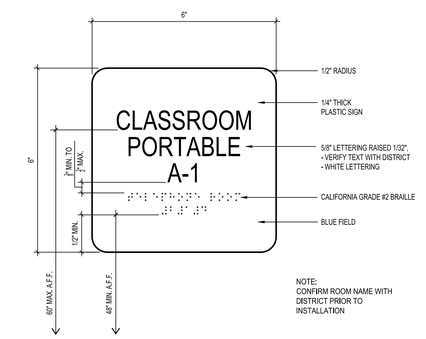

ROOM NAME / NUMBER SIGNAGE — SCALE: HALF — 14

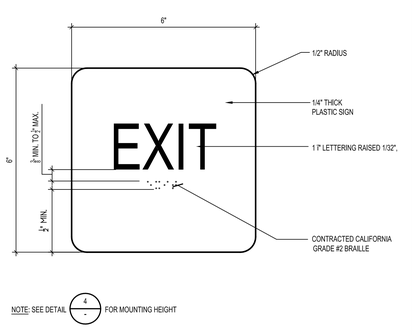

TACTILE EXIT SIGNAGE (ON INTERIOR SIDE) — SCALE: HALF — 15

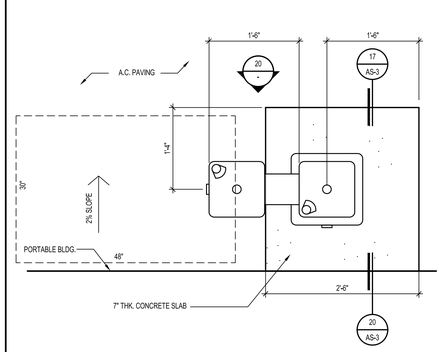

PEDESTAL DRINKING FOUNTAIN — SCALE: 1" = 1'-0" — 19

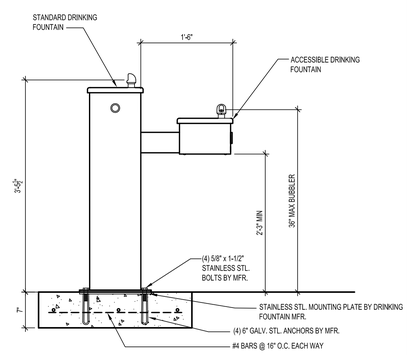

PEDESTAL DRINKING FOUNTAIN ELEVATION — SCALE: 1" = 1'-0" — 20

tBP
architecture
planning
interiors

tBP/Architecture
4611 Teller Avenue
Newport Beach, CA 92660
ph: 949.673.0300 fx: 949.732.3895

LICENSED ARCHITECT — C. LEWIS — NO. 24745 — STATE OF CALIFORNIA

architect

consultant

FILE NO.:
IDENTIFICATION STAMP
DIVISION OF THE STATE ARCHITECT
DEPARTMENT OF GENERAL SERVICES
AC ____ FLS ____ SS ____
DATE ____

DEPARTMENT OF GENERAL SERVICES
DSA Los Angeles Regional Office
700 N. Alameda Street, Suite 5-500
Los Angeles, California 90012
ph: (213)897-3995 fx: (213)897-3159/0726

DUNSMORE ELEMENTARY SCHOOL RELOCATABLE CLASSROOMS

GLENDALE UNIFIED SCHOOL DISTRICT
4717 DUNSMORE AVE.
LA CRESCENTA, CA 91214

owner

tBP project number : 20967.00

file name:

drawn by: checked by:

date: April 21, 2017

Rev:	date:	description:

THIS DRAWING AND THE DESIGNS, DEPICTIONS, IDEAS AND OTHER INFORMATION CONTAINED HEREIN CONSTITUTE UNPUBLISHED WORK OF tBP/ARCHITECTURE AND SHALL REMAIN THE PROPERTY OF tBP/ARCHITECTURE IN PERPETUITY. NO PART THEREOF SHALL BE REPRODUCED, DISCLOSED, DISTRIBUTED, SOLD, PUBLISHED OR OTHERWISE USED IN ANY WAY WITHOUT THE ADVANCED EXPRESS WRITTEN CONSENT OF tBP/ARCHITECTURE.

drawing title:
DETAILS

drawing no.:
A-3
drawing of

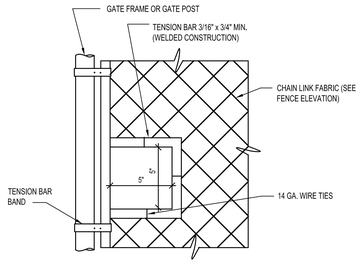

DETAIL OF CUTOUT FOR CHAIN AND LOCK

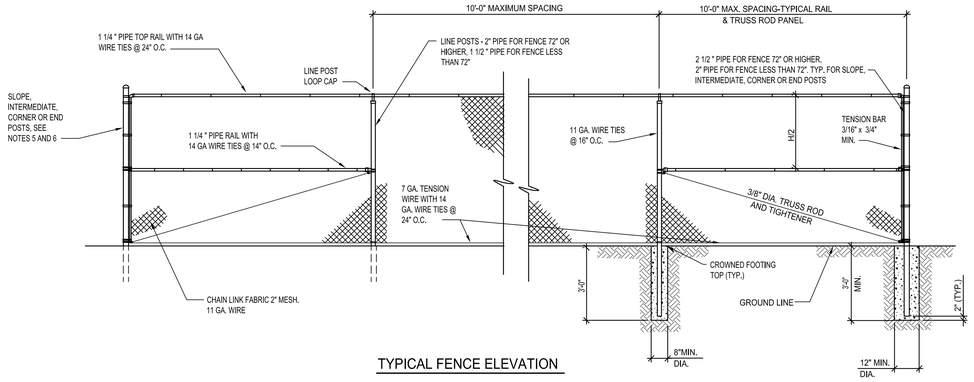

TYPICAL FENCE ELEVATION

GATE POST FOOTING SCHEDULE			
GATE WIDTH		FOOTING MIN. DEPTH, D	
SINGLE GATE	DOUBLE GATE	H TO 6'	H 6' TO 8'
TO 8'	TO 16'	3'-0"	3'-0"

GATE POST SCHEDULE				
FENCE HEIGHT (H)	GATE WIDTH	NOMINAL SIZE OF PIPE INCHES	ACTUAL O.D. INCHES	WEIGHT PER FOOT POUNDS
6 FEET TO 8 FEET INCLUSIVE	SINGLE GATES 6 FEET OR LESS AND DOUBLE GATES 12 FEET OR LESS	2 1/2	2.875	5.79
6 FEET TO 8 FEET INCLUSIVE	SINGLE GATES 6 TO 12 FEET AND DOUBLE GATES 12 TO 24 FEET	3 1/2	4.00	9.11
6 FEET TO 8 FEET INCLUSIVE	SINGLE GATES 12 TO 18 FEET AND DOUBLE GATES 24 TO 36 FEET	6	6.625	18.97

NOTES

1. FABRIC SHALL HAVE KNUCKLED FINISH ON BOTH TOP AND BOTTOM EDGES.
2. ALL GATE HINGES SHALL BE HEAVY DUTY MALLEABLE IRON OR STEEL, INDUSTRIAL SERVICE TYPE AND NOT LESS THAN 3-INCHES IN WIDTH.
3. ALL TIES SHALL BE GALVANIZED STEEL.
4. TOP CAP SHALL BE SECURED TO POST USING 1/4-INCH RIVET.
5. CORNER OR SLOPE POSTS SHALL BE INSTALLED WHEN THE CHANGE IN DEFLECTION ANGLE IS 30 DEGREES OR MORE AT CORNER OR SLOPE POINTS. CONSTRUCT SLOPE POSTS AS THOUGH THEY WERE CORNER POSTS.
6. INTERMEDIATE POSTS SHALL BE PROVIDED WHEN THE DISTANCE BETWEEN CORNER OF SLOPE POSTS EXCEEDS 300 FEET. THEY SHALL BE CONSTRUCTED AS THOUGH THEY WERE CORNER OR SLOPE POSTS.
7. THREADS OF ALL 3/8-INCH ROUND TRUSS RODS SHALL BE PEENDED AFTER INSTALLATION.
8. WHEN TOP RAIL IS OMITTED BY PLAN, PROVIDE 7-GAGE TENSION WIRE WITH 11-GAGE FABRIC TIES OR HOG RINGS SPACED AT 24-INCH INTERVALS.
9. GATES SHALL BE PROVIDED WITH A COMBINATION SPRING LATCH AND PLUNGER ROD, APPROVED BY THE ENGINEER.
10. TENSION WIRE SHALL BE SECURELY FASTENED TO THE TERMINAL POSTS AND BE TAUT AND FREE OF SAG.
11. THE FABRIC SHALL BE PLACED ON THE OUTWARD FACING SIDE OF THE POSTS, STRETCHED TAUT, AND FASTENED SECURELY.

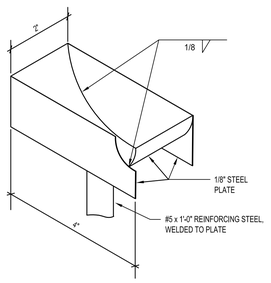

PLUNGER ROD CUP DETAIL

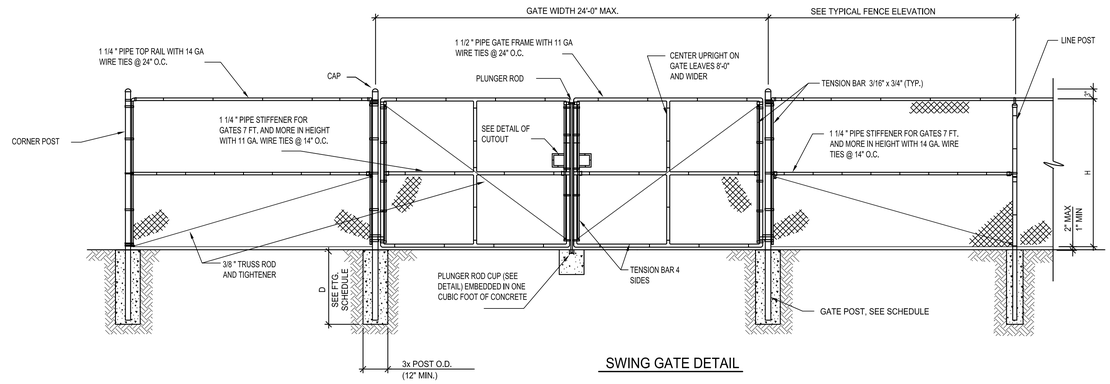

SWING GATE DETAIL

tBP architecture planning interiors

LICENSED ARCHITECT REGIST. NO. C-29893 STATE OF CALIFORNIA

tBP/Architecture
4611 Teller Avenue
Newport Beach, CA 92660
ph: 949.673.0300 fx: 949.732.3895

architect

consultant

FILE NO.:
IDENTIFICATION STAMP
DIVISION OF THE STATE ARCHITECT
DEPARTMENT OF GENERAL SERVICES
AC _____ FLS _____ SS _____
DATE _____

DEPARTMENT OF GENERAL SERVICES
DSA Los Angeles Regional Office
700 N. Alameda Street, Suite 5-500
Los Angeles, California 90012
ph: (213)897-3995 fx: (213)897-3159/0726

DUNSMORE ELEMENTARY SCHOOL RELOCATABLE CLASSROOMS

GLENDALE UNIFIED SCHOOL DISTRICT
4717 DUNSMORE AVE.
LA CRESCENTA, CA 91214

owner

tBP project number : 20967.00
file name:
drawn by: checked by:
date: April 21, 2017

Rev:	date:	description:

THIS DRAWING AND THE DESIGNS, DEPICTIONS, IDEAS AND OTHER INFORMATION CONTAINED HEREIN CONSTITUTE UNPUBLISHED WORK OF tBP/ARCHITECTURE AND SHALL REMAIN THE PROPERTY OF tBP/ARCHITECTURE IN PERPETUITY. NO PART THEREOF SHALL BE REPRODUCED, DISCLOSED, DISTRIBUTED, SOLD, PUBLISHED OR OTHERWISE USED IN ANY WAY WITHOUT THE ADVANCED EXPRESS WRITTEN CONSENT OF tBP/ARCHITECTURE.

drawing title:
DETAILS

drawing no.:
A-4
drawing of

CHAIN LINK FENCE AND GATES — SCALE: N.T.S. — 10

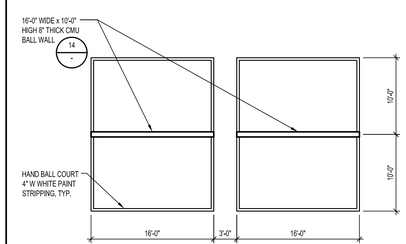

BALL WALL COURT — SCALE: 1/8" = 1'-0" — 13

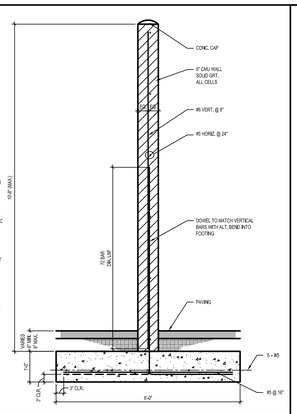

CMU BALL WALL DETAIL — SCALE: 1/2" = 1'-0" — 14

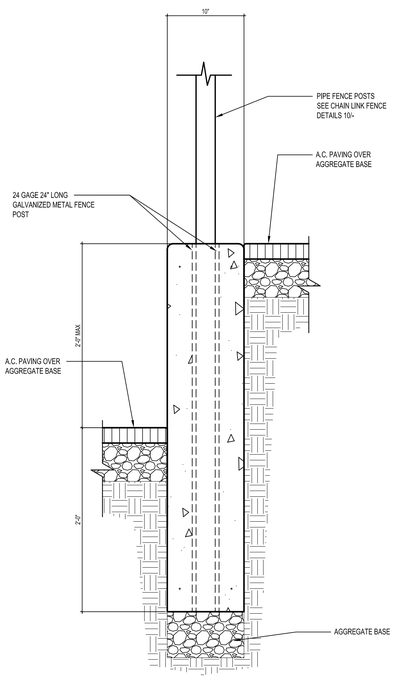

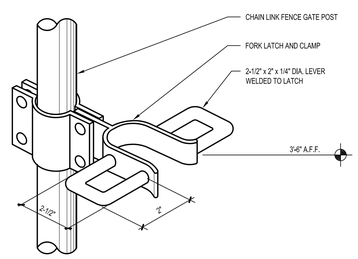

FORK LATCH WITH LEVER TRIM — SCALE: N.T.S. — 18

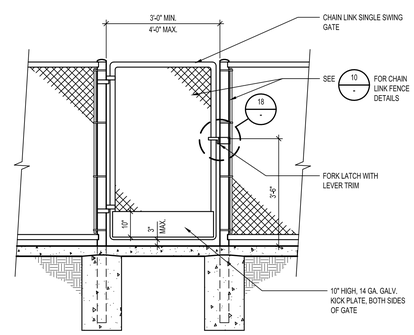

GATE ELEVATION — SCALE: 1/2" = 1'-0" — 19

10" CURB WITH CHAIN LINK FENCE — SCALE: 1.5" = 1'-0" — 20

LIGHT FIXTURE SCHEDULE

FBA # 223.026.010

TYPE	LIGHT FIXTURE DESCRIPTION	FIXTURE MAXIMUM TOTAL INPUT WATTS	FIXTURE MINIMUM LUMEN OUTPUT EFFICIENCY	FIXTURE MOUNTING	LAMP TYPE	LAMP COLOR TEMPERATURE K°	LAMP CRI, NOT LESS THAN	EACH LAMP INITIAL MINIMUM LUMEN OUTPUT	TOTAL ALL LAMPS INITIAL MINIMUM LUMEN OUTPUT	LAMP QUANTITY
SL1	LED BUILDING MOUNTED LUMINAIRE WITH DIE CAST ALUMINUM	24	-	WALL	LED	3000	70		2029	
	HOUSING IN FINISH AS SELECTED BY ARCHITECT. TYPE 3									
	DISTRIBUTION; CLEAR ACRYLIC LENS; INTEGRAL DRIVERS AND									
	EMERGENCY BATTERY PACK FOR 90 MINUTES OF EMERGENCY									
	ILLUMINATION, IP65 RATED									
	LITHONIA "WST" SERIES # WST LED 10A700/30K SR3 120 ELCW									
	OR APPROVED EQUAL BY COOPER, GARDCO									

FIXTURE NOTES

(NOTE: REFER TO SPECIFICATIONS FOR ADDITIONAL REQUIREMENTS)

1. FIXTURES LOCATED OUTDOORS SHALL BE RATED FOR STARTING AND OPERATING TEMPERATURES BELOW 0-DEGREES FAHRENHEIT.
2. FIXTURES WITH THE SAME TYPE # SHALL BE THE PRODUCTS OF THE SAME MANUFACTURER, (I.E., TYPE #1, 1A, 1B, ETC., SHALL BE THE SAME MANUFACTURER).
3. VERIFY MOUNTING HEIGHT OF ALL WALL MOUNTED FIXTURES WITH ARCHITECT PRIOR TO ROUGH-IN.
4. REFER TO ARCHITECTURAL REFLECTED CEILING PLANS AND WALL ELEVATIONS FOR EXACT INSTALL LOCATION OF ALL FIXTURES.
5. VERIFY VOLTAGE BEING SUPPLIED TO FIXTURES PRIOR TO SUBMITTING SHOP DRAWINGS AND PRIOR TO ORDERING. FIXTURE VOLTAGE SHALL MATCH BRANCH CIRCUITS CONNECTING TO RESPECTIVE FIXTURE.
6. PROVIDE TESTING CERTIFICATION AND COMMISSIONING OF LIGHTING FIXTURES, LAMPS, BALLASTS, INSTALLATION, LIGHTING CONTROL SYSTEM AND LIGHTING SYSTEM OPERATION.
7. LIGHTING CONTROL ACCEPTANCE REQUIREMENTS PER 130.4. A CERTIFICATE OF ACCEPTANCE SHALL BE SUBMITTED TO THE ENFORCEMENT AGENCY UNDER SECTION 10-103(a) OF PART 1 FOR:
   - A. AUTOMATIC DAYLIGHT CONTROLS
   - B. LIGHTING CONTROLS
   - C. DEMAND RESPONSIVE CONTROLS
   - D. OUTDOOR LIGHTING CONTROLS

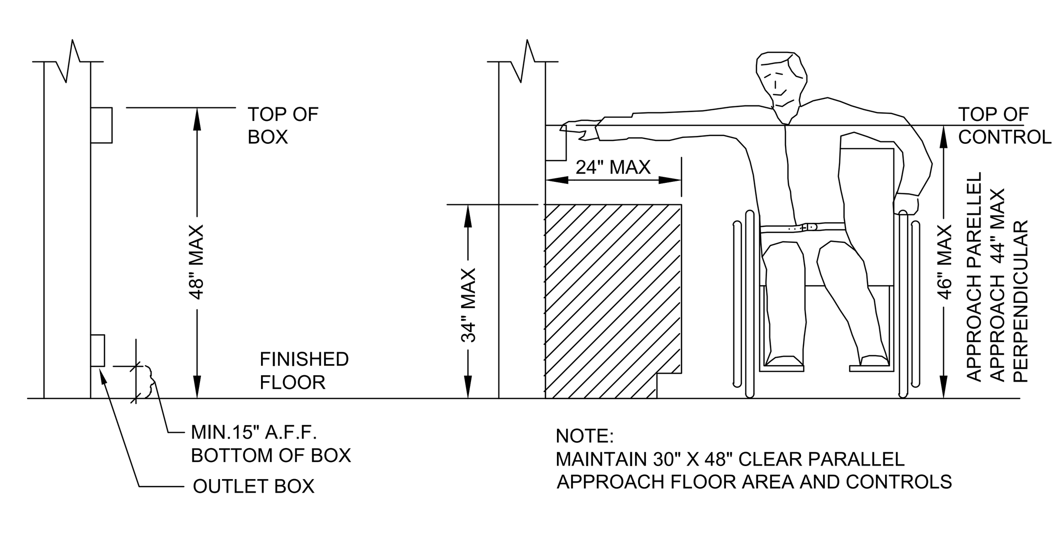

MOUNTING HEIGHT OVER OBSTRUCTION SCALE: N.T.S. 1

GENERAL NOTES

1. PORTIONS OF THESE PLANS HAVE BEEN DERIVED FROM INFORMATION TAKEN FROM ORIGINAL ELECTRICAL PLANS. THE INTENT OF THESE PLANS IS TO PROVIDE COMPLETE AND OPERABLE SYSTEMS.
2. IT IS THE CONTRACTOR'S RESPONSIBILITY TO VISIT THE SITE AND BECOME THOROUGHLY FAMILIAR WITH ALL THE FEATURES OF THE BUILDING AND SITE WHICH WAY AFFECT THE PROPER PERFORMANCE OF THIS WORK.
3. IT IS THE CONTRACTOR'S RESPONSIBILITY TO REFER TO THE DRAWINGS OF OTHER TRADES FOR ADDITIONAL DETAILS AND REQUIREMENTS WHICH AFFECT THE PROPER PERFORMANCE OF THIS WORK.
4. RACEWAY ROUTING, DIMENSIONS, AND EQUIPMENT LOCATIONS ARE APPROXIMATE. CONTRACTOR SHALL FIELD VERIFY ALL DIMENSIONS AND EXACT RACEWAY ROUTING TO CONFORM TO FIELD CONDITIONS.
5. ELECTRICAL DOWN TIME MUST BE APPROVED BY THE COLLEGE. CONTRACTOR SHALL MAKE PROVISIONS TO ACCOMPLISH THE WORK OF THIS CONTRACT WITHOUT UNDUE INTERFERENCE WITH COLLEGE OPERATIONS.
6. ALL EQUIPMENT DEVICES, CONDUIT FITTINGS, JUNCTION BOXES, AND CONSTRUCTION LOCATED OUTDOORS SHALL BE WEATHERPROOF.
7. ALL SIGNAL AND FIRE ALARM SYSTEMS TERMINATIONS MADE IN JUNCTION BOXES SHALL BE EXECUTED USING TERMINAL BLOCKS.
8. SIGNAL AND/OR FIRE ALARM SYSTEMS SPLICES ARE NOT PERMITTED IN UNDERGROUND PULLBOXES.
9. ALL ELECTRICAL EQUIPMENT INCLUDING PANELS, OUTLET BOXES, CONDUITS, ETC. SHALL BE ANCHORED TO BUILDING STRUCTURE. ANCHORING SHALL BE DESIGNED FOR 1.0 GRAVITY LATERAL ACCELERATION OF THE EQUIPMENT.
10. VERIFY THE EXACT LOCATION OF THE RELOCATABLE BUILDING PANELBOARD WITH THE BUILDING MANUFACTURER PRIOR TO ROUGH-IN.
11. WHERE POSSIBLE ALL RACEWAYS SHALL BE ROUTED CONCEALED IN WALLS AND/OR ABOVE ACCESSIBLE CEILING SPACE.
12. UNLESS SPECIFICALLY SHOWN ON THESE PLANS NO STRUCTURAL MEMBER SHALL BE CUT NEITHER DRILLED NOR NOTCHED WITHOUT PRIOR WRITTEN AUTHORIZATION FROM THE STRUCTURAL ENGINEER AND THE DIVISION OF THE STATE ARCHITECT.
13. PROVIDE OZ COMPANY TYPE "DX" EXPANSION/DEFLECTION FITTINGS WITH BONDING JUMPER ON ALL CONDUITS AT ALL BUILDING EXPANSION OR SEISMIC JOINT CROSSINGS.

PERFORMANCE NOTES

1. VISIT THE SITE PRIOR TO BID AND INVESTIGATE THE EXISTING FIRE ALARM, TELEPHONE, INTRUSION DETECTION, EMS, CLOCK, INTERCOM/PA, TELEVISION AND DATA SYSTEMS EQUIPMENT ON CAMPUS. COORDINATE WITH THE EXISTING SYSTEMS MANUFACTURERS FOR ALL REQUIRED EQUIPMENT MODIFICATIONS, CONDUIT, WIRING AND UPGRADING REQUIRED TO EXTEND THE EXISTING SYSTEMS TO THE NEW MODULAR BUILDINGS. INCLUDE ALL COSTS IN BID. ALL NEW COMPONENTS SHALL BE COMPATIBLE WITH THE EXISTING SYSTEM.
2. PAINT ALL EXPOSED RACEWAYS TO MATCH SURROUNDING SURFACE COLOR.
3. PROVIDE GROUNDING SYSTEM PER DETAIL A/E0.2 WHERE METAL RAMPS OR RAILWAYS ARE USED PROVIDE 1#2 BONDING ELECTRODE FROM THE RAMPS AND RAILWAYS TO THE STRUCTURAL STEEL MEMBER OF THE BUILDING.
4. PROVIDE WEATHERPROOF SEALANT AROUND PRECAST CONCRETE PULL BOX COVERS AFTER WORK IS COMPLETED WITHIN BOX.
5. PROVIDE APPROVED WEATHERPROOF SEALANT AROUND ALL WALL PENETRATIONS. SEAL IN A MANNER ACCEPTABLE TO THE ARCHITECT.
6. PROVIDE CORE DRILLING OF ALL STRUCTURES AS REQUIRED FOR RACEWAY ROUTING AND DISCOVERED SITE CONDITIONS.
7. RECONNECT EXISTING CIRCUITS FOR EQUIPMENT THAT IS TO REMAIN IF DISRUPTED BY WORK PERFORMED UNDER THIS CONTRACT. MAINTAIN CONTINUITY OF ALL FEED THRU WIRING.
8. WHERE NEW CONDUCTOR(S)/CABLING IS SPECIFIED IN EXISTING CONDUITS CONTAINING EXISTING WIRING THE CONTRACTOR SHALL REMOVE ENOUGH OF THE EXISTING WIRING TO PULL IN NEW PLUS REPLACEMENT OF EXISTING REMOVED.
9. PROVIDE NEW TELEPHONE(S), SPEAKERS, DATA OUTLETS, AUDIO/VISUAL SYSTEMS AND CLOCKS IN MODULAR BUILDINGS WHERE INDICATED ON DRAWINGS.

EQUIPMENT ANCHORAGE NOTES

MEP COMPONENT ANCHORAGE NOTE:

ALL MECHANICAL, PLUMBING, AND ELECTRICAL COMPONENTS SHALL BE ANCHORED AND INSTALLED PER THE DETAILS ON THE DSA APPROVED CONTRUCTION DOCUMENTS. WHERE NO DETAIL IS INDICATED, THE FOLLOWING COMPONENTS SHALL BE ANCHORED OR BRACED TO MEET THE FORCE AND DISPLACEMENT REQUIREMENTS PRESCRIBED IN THE 2013 CBC, SECTIONS 1616A.1.18 THROUGH 1616A.1.26 AND ASCE 7-10 CHAPTER 6 TO 30.

1. ALL PERMANENT EQUIPMENT AND COMPONENTS.
2. TEMPORARY OR MOVABLE EQUIPMENT THAT IS PERMANENTLY ATTACHED (E.G. HARD WIRED) TO THE BUILDING SERVICES SUCH AS ELECTRICITY, GAS OR WATER.
3. MOVABLE EQUIPMENT WHICH IS STATIONED IN ONE PLACE FOR MORE THAN 8 HOURS AND HEAVIER THAN 400 POUNDS ARE REQUIRED TO BE ANCHORED WITH TEMPORARY ATTACHEMENTS.

THE ATTACHMENT OF THE FOLLOWING MECHANICAL AND ELECTRICAL COMPONENTS SHALL BE POSITIVELY ATTACHED TO THE STRUCTURE, BUT NEED NOT BE DETAILED ON THE PLANS. THE PROJECT INSPECTOR WILL VERIFY THAT THESE ITEMS HAVE BEEN POSITIVELY ATTACHED. THESE COMPONENTS SHALL HAVE FLEXIBLE CONNECTIONS PROVIDE BETWEEN THE COMPONENT AND ASSOCIATED DUCTWORK, PIPING, AND CONDUIT.

A. COMPONENTS WEIGHING LESS THAN 400 POUNDS AND HAVE A CENTER OF MASS LOCATED 4 FEET OR LESS ABOVE THE ADJACENT FLOOR OR ROOF LEVEL THAT DIRECTLY SUPPORT THE COMPONENT.
B. COMPONENTS WEIGHING LESS THAN 20 POUNDS, OR IN THE CASE OF DISTRIBUTED SYSTEMS, LESS THAN 5 POUNDS PER FOOT, WHICH ARE SUSPENDED FROM A ROOF OR FLOOR OR HUNG FROM A WALL.

FOR THOSE ELEMENTS THAT DO NOT REQUIRE DETAILS ON THE APPROVED DRAWINGS, THE INSTALLATION SHALL BE SUBJECT TO THE APPROVAL OF THE MECHANICAL/ELECTRICAL ENGINEER.

PIPING, DUCTWORK, AND ELECTRICAL DISTRIBUTION SYSTEM BRACING NOTE

PIPING, DUCTWORK, AND ELECTRICAL DISTRIBUTION SYSTEMS SHALL BE BRACED TO COMPLY THE FORCE AND DISPLACEMENTS PRESCRIBED IN ASCE 7-10 SECTION 13.3 AS DEFINED IN ASCE 7-10 SECTION 13.6.8, 13.6.7, 13.6.5.6, AND 2013 CBC, SECTIONS 1616A.1.23,1616A.1.24, 1616A.1.25 AND 1616A.1.26.

THE BRACING AND ATTACHMENTS TO THE STRUCTURE SHALL BE DETAILED ON THE APPROVED DRAWINGS OR THEY SHALL COMPLY WITH ONE OF THE OSHPD PRE-APPROVALS (OPM#) AS MODIFIED TO SATISFY ANCHORAGE REQUIREMENTS OF ACI 318, APPENDIX D.

COPIES OF THE MANUAL SHALL BE AVAILABLE ON THE JOBSITE PRIOR TO THE START OF HANGING AND BRACING OF THE PIPE, DUCTWORK, AND ELECTRICAL DISTRIBUTION SYSTEMS.

SYMBOL LIST

(ALL SYMBOLS NOT NECESSARILY USED ON THESE DRAWINGS)
ALL SYMBOL DESCRIPTIONS ARE SUBJECT TO MODIFICATION AS NOTED ON THE DRAWINGS.
VERIFY EXACT LOCATIONS AND HEIGHTS OF OUTLETS WITH ARCHITECTURAL INTERIOR ELEVATIONS PRIOR TO ROUGH-IN.

SYMBOL	DESCRIPTION
J	JUNCTION BOX, FLUSH WALL MOUNTED, +18".
J	JUNCTION BOX CONCEALED ABOVE ACCESSIBLE CEILING AREA OR MOUNTED ON ROOF.
J	INDICATES CONNECTION TO EQUIPMENT AS REQUIRED, TYPICAL.
A / E-1	PANELBOARD, ADJACENT LINE INDICATES PANEL FRONT. ADJACENT BALLOON INDICATES PANEL DESIGNATION "A", SEE DRAWING E-1 FOR PANEL SCHEDULE.
	TERMINAL CABINET. ADJACENT LINE INDICATES CABINET FRONT.
	EQUIPMENT CABINET. ADJACENT LINE INDICATES CABINET FRONT.
	LIGHTING FIXTURE, SURFACE OR FLUSH MOUNTED AS INDICATED ON FIXTURE SCHEDULE, ON WALL MOUNTED OUTLET BOX, +90". STEM INDICATES WALL MOUNTED OUTLET BOX, TYPICAL.
S 2, P a, b	SINGLE POLE TOGGLE SWITCH, ON FLUSH WALL MOUNTED OUTLET BOX, +45". INSTALL MULTIPLE SWITCHES UNDER COMMON COVER PLATE. SUBSCRIPT OR SUPERSCRIPT AT SWITCH SYMBOL INDICATES THE FOLLOWING: 2 - DOUBLE POLE 4 - FOUR WAY M - MANUAL MOTOR STARTERS 3 - THREE WAY P - PILOT LIGHT K - KEY OPERATED R - SPDT MOMENTARY CONTACT RELAY SWITCH V - VAPOR PROOF a,b,c,d, ETC. - MULTIPLE SWITCHES WITH IDENTIFICATION OF OUTLET CONTROLLED.
2 / 100	FIXTURE SCHEDULE DESIGNATION: "2" INDICATES FIXTURE TYPE, "100" INDICATES FIXTURE TOTAL WATTAGE.
C / E-2	DETAIL CALLOUT, "C" INDICATES DETAIL, "E-2" INDICATES DRAWING WHERE DETAIL OCCURS.
1	PLAN NOTE CALLOUT. REFER TO CORRESPONDING NOTE ON DRAWING WHERE CALLOUT OCCURS.
	CONDUIT, INSTALLED CONCEALED IN WALL OR IN CEILING SPACE. 1/2" C - 2 #12, 1#12(GRD) 3/4" C - 6 #12, 1#12(GRD) 1/2" C - 3 #12, 1#12(GRD) 1" C - 7 #12, 1#12(GRD) 3/4" C - 4 #12, 1#12(GRD) 1" C - 8 #12, 1#12(GRD) 3/4" C - 5 #12, 1#12(GRD) 1 1/4" C - 9 #12, 1#12(GRD)
	CONDUIT, INSTALLED CONCEALED IN OR UNDER FLOOR OR BELOW GRADE, 3/4"C. MINIMUM.
	CONDUIT, INSTALLED EXPOSED.
B-5, 7, 9	HOMERUN TO PANEL "B" FOR CIRCUITS 5, 7, 9 WITH COMMON NEUTRAL
	UNDERGROUND CONDUIT STUBOUT, STUB 5'-0" FROM BUILDING OR WALKWAY, CAP, MARK AND RECORD.
	INDICATES CONDUIT SLEEVE(S) THROUGH WALL ABOVE THE CEILING. NUMBER AND SIZE OF CONDUITS AS NOTED.
E	EXISTING CONDUIT.
F	FIRE ALARM SYSTEM - 3/4"C. WITH FIRE ALARM SYSTEM CONDUCTORS AS SPECIFIED.
P	PUBLIC ADDRESS SYSTEM - 3/4"C., WITH CONDUCTORS AS SPECIFIED. P2 - 3/4"C WITH CONDUCTORS AS SPECIFIED.
TV	TELEVISION SYSTEM - 1"C. WITH CONDUCTORS AS SPECIFIED.
ID	INTRUSION DETECTION SYSTEM - 3/4"C. WITH CONDUCTORS AS SPECIFIED.
WP S	WEATHERPROOF PUBLIC ADDRESS/CLASS PASSING SPEAKER, HOUSING & GRILLE, FLUSH WALL MOUNTED, +90".
S	PUBLIC ADDRESS/CLASS PASSING SPEAKER, HOUSING AND GRILL, FLUSH WALL MOUNTED, +90".
S	PUBLIC ADDRESS/CLASS PASSING SPEAKER, HOUSING & GRILLE, FLUSH CEILING MOUNTED.
S AV	CLASSROOM AUDIO ENHANCEMENT SPEAKER IN FLUSH CEILING MOUNTED BACKBOX.
D1	COMPUTER/DATA PROCESSING SYSTEM - 3/4"C., WITH ONE(1) CAT6 CABLE AS SPECIFIED. D2 - 1"C., WITH TWO(2) CAT6E CABLES AS SPECIFIED. D3 - 1 1/4"C., WITH THREE(3) CAT6E CABLES AS SPECIFIED. D4 - 1 1/4"C., WITH FOUR(4) CAT6E CABLES AS SPECIFIED.
	SELF CORRECTING BATTERY OPERATED CLOCK, +90" A.F.F. REFER TO ARCHITECTURAL INTERIOR ELEVATIONS FOR EXACT LOCATIONS AND MOUNTING HEIGHTS.
ID	INTRUSION DETECTION SYSTEM MOTION SENSOR, ON FLUSH CEILING MOUNTED OUTLET BOX.
	COMPUTER/DATA OUTLET WITH TWO (2) DATA OUTLET CONNECTORS, ON FLUSH IN WALL OUTLET BOX, +18". PROVIDE OUTLET BOX, DATA JACKS, FACE PLATE, ETC. AND 1" CONDUIT TO THE ACCESSIBLE CEILING SPACE UNLESS NOTED OTHERWISE. PROVIDE TWO (2) CAT 6E DATA NETWORK CABLES AS SPECIFIED FROM THE OUTLET TO THE RESPECTIVE MDF/IDF.
WAP	COMPUTER/DATA OUTLET WITH TWO (2) DATA OUTLET CONNECTORS, ON CEILING MOUNTED OUTLET BOX, FOR WIRELESS ACCESS POINT. PROVIDE OUTLET BOX, DATA JACK, FACE PLATE, ETC. PROVIDE TWO (2) CAT 6E DATA NETWORK CABLE AS SPECIFIED FROM THE OUTLET TO THE RESPECTIVE MDF/IDF.
	COMPUTER/DATA OUTLET WITH DATA OUTLET CONNECTOR, ON CEILING MOUNTED OUTLET BOX. PROVIDE ONE (1) CAT 6E DATA NETWORK CABLE AS SPECIFIED FROM THE OUTLET TO THE RESPECTIVE MDF/IDF.
AV	AUDIO/VIDEO OUTLET, ON FLUSH WALL MOUNTED OUTLET BOX WITH COVERPLATE AND GROMETTED OPENING PROVIDE OUTLET BOX, COVERPLATE AND 2" CONDUIT CONCEALED IN WALL TO THE ACCESSIBLE CEILING SPACE UNLESS NOTED OTHERWISE. PROVIDE VGA AND USB CABLE FROM THE TEACHER'S DESK TO THE INTERACTIVE WHITEBOARD AND SHORT THROW PROJECTOR OUTLET LOCATED AT THE TEACHING WALL MOUNT AV OUTLET AT TEACHER'S DESK AT +18" MOUNT AV OUTLET AT INTERACTIVE WHITEBOARD AT +70".
TC	AUDIO/VIDEO CONTROL PANEL, ON FLUSH IN WALL MOUNTED OUTLET BOX, +45"A.F.F. LOCATED AT TEACHER'S DESK. PROVIDE CONTROL PANEL, OUTLET BOX AND 1" CONDUIT CONCEALED IN WALL DOWN TO AV CONNECTOR PLATE. AT +18"A.F.F. PROVIDE AV CABLING BETWEEN AV CONTROL PANEL AND AV CONNECTOR PLATE IN ACCORDANCE WITH THE AV SYSTEM MANUFACTURER'S REQUIREMENTS.
	TELECOMMUNICATIONS OUTLET ON FLUSH WALL MOUNTED OUTLET BOX +18", WITH DESK MOUNTED DEVICE. PROVIDE 1"C. WITH CONDUCTORS AS SPECIFIED STUBBED INTO ACCESSIBLE CEILING SPACE.
P	DUPLEX CONVENIENCE RECEPTACLE VERTICAL ON FLUSH CEILING MOUNTED OUTLET BOX, +18".
	DUPLEX CONVENIENCE RECEPTACLE VERTICAL ON FLUSH WALL MOUNTED OUTLET BOX, +18". INDICATES WALL MOUNTED OUTLET BOX, TYPICAL.
	DOUBLE DUPLEX (FOUR-PLEX) CONVENIENCE RECEPTACLE ON ONE FLUSH WALL MOUNTED OUTLET BOX
	CIRCUIT BREAKER STATIONARY (NON-DRAWOUT) SECONDARY VOLTAGE.
	DENOTES CONDUIT(S) RISING UP.
	MODULAR BUILDING GROUND ROD. SEE DETAIL 3/E-005.
E	LOW VOLTAGE LIGHTING ENTRANCE CONTROL STATION ON FLUSH IN WALL OUTLET BOX, +45".
D	LOW VOLTAGE LIGHTING INSTRUCTORS CONTROL STATION ON FLUSH IN WALL OUTLET BOX, +45".
	LIGHTING FIXTURE, SURFACE OR PENDANT MOUNTED, ON FLUSH CEILING MOUNTED OUTLET BOX.
	LIGHTING FIXTURE, RECESS MOUNTED, WITH OUTLET BOX.
	LIGHTING FIXTURE, SURFACE OR FLUSH MOUNTED AS INDICATED ON FIXTURE SCHEDULE, ON WALL MOUNTED OUTLET BOX, +90". STEM INDICATES WALL MOUNTED OUTLET BOX, TYPICAL.
	OUTLET ON EMERGENCY LIGHTING CIRCUIT.
	LIGHTING FIXTURE WITH LAMPS ON NORMAL AND EMERGENCY LIGHTING CIRCUITS, PROVIDE SEPARATE LAMP BALLASTS AS REQUIRED.

ABBREVIATIONS

A.F.F.	ABOVE FINISH FLOOR
A.F.G.	ABOVE FINISH GRADE
AWG	AMERICAN WIRE GAUGE
AMP, A	AMPERE
AF/AT	AMP FRAME, AMP TRIP
AS/AF	AMP SWITCH, AMP FUSE
AV	AUDIO VISUAL
CIRC., CKT.	CIRCUIT
CB	CIRCUIT BREAKER
C	CONDUIT
C.O.	CONDUIT ONLY
CONN	CONNECTED
DIA	DIAMETER
EMCS	ENERGY MANAGEMENT CONTROL SYSTEM
EMT	ELECTRICAL METALLIC TUBING
EWC	ELECTRIC WATER COOLER
E-O-L	END-OF-LINE CIRCUIT TERMINATOR
EF	EXHAUST FAN
ER	EXISTING EQUIPMENT TO BE REMOVED
E	EXISTING EQUIPMENT
FT. OR '	FEET
FA	FIRE ALARM
FLA	FULL LOAD AMPS
GFI	GROUND FAULT INTERRUPTER
GRD	GROUND
HVAC	HEATING, VENTILATING AND AIR CONDITIONING
H.,W.,D.,L.	HEIGHT, WIDTH, DEPTH, LENGTH
HP	HORSEPOWER
IDF	INTERMEDIATE DISTRIBUTION FRAME
IN. OR "	INCHES
IG	ISOLATED GROUND
J-BOX	JUNCTION BOX
KVA	KILOVOLT AMPERES
KW	KILOWATT
LCL	LONG CONTINUOUS LOAD
L.O.	LUGS ONLY
LTG, LTS	LIGHTING
MCB	MAIN CIRCUIT BREAKER
MDF	MAIN DISTRIBUTION FRAME
MH	METAL HALIDE
MCC	MOTOR CONTROL CENTER
MCM	THOUSAND CIRCULAR MILS
MCP	MOTOR CIRCUIT PROTECTOR
MLO	MAIN LUGS ONLY
MTD	MOUNTED
NEC	NATIONAL ELECTRICAL CODE
NC	NORMALLY CLOSED
NO	NORMALLY OPENED
NIC	NOT IN CONTRACT
NO. OR #	NUMBER
PRIMARY	OVER 600 VOLTS
PH. OR	PHASE
PROVIDE	FURNISH, INSTALL AND CONNECT
PA	PUBLIC ADDRESS
REC, RECEPT	RECEPTACLE
REF	REFRIGERATOR
RGS	RIGID GALVANIZED STEEL
RL	RELOCATED EXISTING EQUIPMENT
SECONDARY	600 VOLTS AND LESS
O	INDICATES DEVICE ON SURFACE WALL MOUNTED OUTLET BOX.
TV	TELEVISION
TYP	TYPICAL
U.N.O.	UNLESS NOTED OTHERWISE
V	VOLTS
VA	VOLT AMPERES
WP	WEATHERPROOF
W	WIRE
DFCI	DISTRICT FURNISHED CONTRACTOR INSTALLED
DFDI	DISTRICT FURNISHED DISTRICT INSTALLED
BLDG.	BUILDING
IWB	INTERACTIVE WHITE BOARD
AVC	AUDIO/VIDEO CABINET
1P	SINGLE POLE
2P	DOUBLE POLE
3P	TRIPLE POLE

SHEET INDEX

E0.1	GENERAL NOTES, SYMBOL LIST, FIXTURE SCHEDULE AND DETAIL
E0.2	SINGLE LINE DIAGRAM AND DETAILS
E0.3	FIRE ALARM RISER DIAGRAM AND CALCULATIONS
E0.4	TYPICAL MODULAR BUILDING ELECTRICAL PLAN AND DETAILS
E0.5	OUTDOOR TITLE 24
E0.6	POWER DISTRIBUTION TITLE 24
ES.1	OVERALL SITE ELECTRICAL PLAN
ES.2	ENLARGED SITE ELECTRICAL PLANS
E1.1	ELECTRICAL SPECIFICATIONS

tBP architecture planning interiors

tBP/Architecture
4611 Teller Avenue
Newport Beach, CA 92660
ph: 949.673.0300 fx: 949.732.3895

LICENSED ARCHITECT HUNG L. CHENG NO. C34187 REN. 4-30-19 STATE OF CALIFORNIA

architect

REGISTERED PROFESSIONAL ENGINEER STEVEN R. ... No. E 10372 Exp. 09-30-18 ELECTRICAL STATE OF CALIFORNIA

FBA Engineering
Consulting Electrical Engineers
150 Paularino Avenue Suite A120
Costa Mesa, CA 92626
949.852.9995 • 949.852.1657 (fax)
fbaengr.com
FBA Job Number: 212.214

consultant

FILE NO.:
IDENTIFICATION STAMP
DIVISION OF THE STATE ARCHITECT
DEPARTMENT OF GENERAL SERVICES
AC ______ FLS ______ SS ______
DATE ______

DEPARTMENT OF GENERAL SERVICES
DSA Los Angeles Regional Office
700 N. Alameda Street, Suite 5-500
Los Angeles, California 90012
ph: (213)897-3995 fx: (213)897-3159/0726

DUNSMORE ELEMENTARY SCHOOL
RELOCATABLE CLASSROOMS

GLENDALE UNIFIED SCHOOL DISTRICT
4717 DUNSMORE AVE.
LA CRESCENTA, CA 91214

owner

tBP project number : 20967.00
file name:
drawn by: checked by:
date: March 2017
Rev: date: description:

THIS DRAWING AND THE DESIGNS, DEPICTIONS, IDEAS AND OTHER INFORMATION CONTAINED HEREIN CONSTITUTE UNPUBLISHED WORK OF tBP/ARCHITECTURE AND SHALL REMAIN THE PROPERTY OF tBP/ARCHITECTURE IN PERPETUITY. NO PART THEREOF SHALL BE REPRODUCED, DISCLOSED, DISTRIBUTED, SOLD, PUBLISHED OR OTHERWISE USED IN ANY WAY WITHOUT THE ADVANCED EXPRESS WRITTEN CONSENT OF tBP/ARCHITECTURE.

drawing title:
GENERAL NOTES, SYMBOL LIST, FIXTURE SCHEDULE & DETAIL

drawing no.:
E0.1
drawing of

FBA Engineering / Plot Date: 4/25/2017 11:01 AM / Plotted by: Brandon Nguyen / Drawing Location: I:\212\214\E0-1_212214.dwg

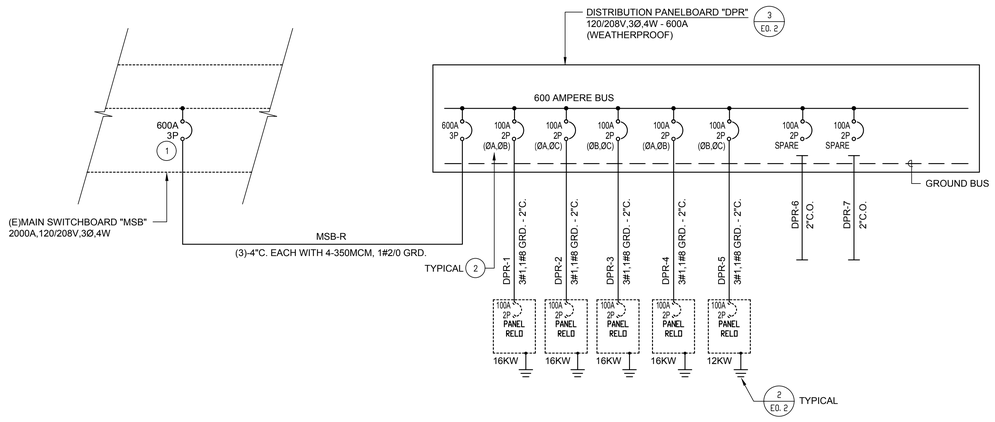

PLAN NOTES:

1. PROVIDE NEW CIRCUIT BREAKER (TYPE, MANUFACTURER AND A.I.C. RATING TO MATCH EXISTING) IN AVAILABLE SPACE IN MAIN SERVICE ENTRANCE SWITCHBOARD. PROVIDE DEAD FRONT COVER, PERMANENTLY ATTACHED ENGRAVED NAMEPLATE AND MOUNTING HARDWARE FOR A COMPLETE INSTALLATION.
2. CONNECT TO PHASE BUSSING AS INDICATED SO THAT LOAD ARE BALANCED ACROSS ALL THREE PHASES.

NOTE:
1. ALL EQUIPMENT SHOWN DASHED IS EXISTING ALL OTHER EQUIPMENT SHALL BE PROVIDED UNDER THIS CONTRACT.
2. THE EXISTING ELECTRICAL SERVICE IS SUFFICIENT TO SERVE THE NEW ADDITIONAL LOAD INDICATED.

THE EXISTING SOURCE OF POWER HAS BEEN REVIEWED AND FOUND TO BE ADEQUATE FOR ADDITIONAL POWER LOADS

PARTIAL SINGLE LINE DIAGRAM

SCALE NONE 1

CONDUIT DUCT BANK DETAIL

SCALE NONE 4

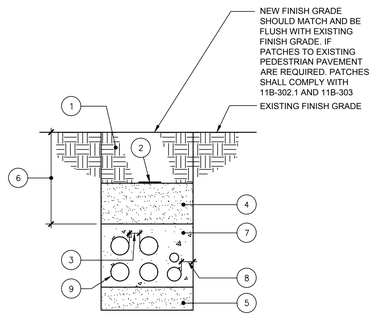

NOTE: SEE SPECIFICATION FOR ADDITIONAL INFORMATION AND REQUIREMENTS.

DUCT BANK NOTES:

1. NATIVE SOIL BACK FILL
2. 3" WIDE WARNING TAPE LOCATED 12" BELOW GRADE. TAPE SHALL INDICATE: CAUTION BURIED ELECTRICAL CONDUIT".
3. 3" BETWEEN IDENTICAL SYSTEM CONDUITS OR 24" BETWEEN DIFFERENT SYSTEM CONDUITS.
4. DAMP SAND BACK FILL TO WITHIN 12" OF FINISH GRADE.
5. 6" BED OF DAMP SAND.
6. 36" IN TRAFFIC AREAS, 24" IN NON-TRAFFIC AREAS.
7. CONCRETE ENCASEMENT.
8. 3" MINIMUM COVERAGE.
9. REFER TO PLANS FOR CONDUITS SIZE AND QUANTITIES.

DISTRIBUTION BOARD ANCHORAGE DETAIL

SCALE NONE 3

NOTE:

WORST CASE APPLIES TO ALL TRANSFORMERS.

FOR OUTDOOR UNITS USE STAINLESS STEEL KB TZ's

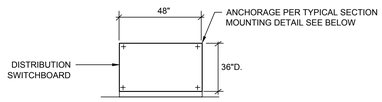

PLAN VIEW

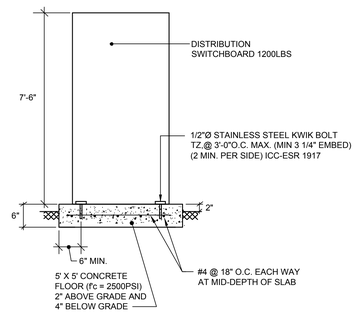

MODULAR BUILDING GROUND DETAIL

SCALE NONE 2

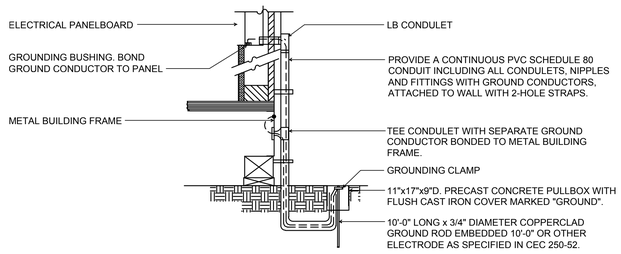

NOTES:

1. SIZE OF CONDUCTORS SHALL COMPLY WITH CEC. TABLE 250.66.
2. BOND SEPARATE CONDUCTORS FROM GROUND ROD TO ELECTRICAL PANEL AND TO METAL BUILDING FRAME (CEC 250.52). IN ADDITION TO THE DETAIL SHOWN ABOVE, BOND THE ELECTRICAL GROUND TO METAL UNDERGROUND WATER PIPE IN DIRECT CONTACT WITH THE EARTH FOR 10 FT. OR MORE, IF AVAILABLE (CEC 250.52)
3. ALL MODULES OF METAL FRAME BUILDINGS SHALL BE ELECTRICALLY BONDED TOGETHER. (BOLTING ONLY IS NOTE ACCEPTABLE BONDING.)
4. CHECK RESISTANCE TO GROUND. IF RESISTANCE EXCEEDS 25 OHMS, INSTALL ADDITIONAL GROUND ROD GREATER THAN SIX FEET AWAY (CEC 250.56). ONCE THE SECOND GROUND ROD IS INSTALLED, ADDITIONAL GROUND RESISTANCE TESTING IS NOT REQUIRED.
5. WHERE MODULAR BUILDINGS ARE GROUPED TOGETHER, A GROUND ROD MAY BE INSTALLED AT THE END BUILDINGS AND A GROUND RING MAY BE INSTALLED BETWEEN THEM. EACH INTERMEDIATE MODULAR BUILDING MAY BE BONDED TO THAT GROUND RING. WHERE THIS METHOD IS USED, GROUND RESISTANCE TESTING SHALL NOT BE REQUIRED.
6. WHERE MODULAR BUILDINGS ARE INSTALLED ON CONCRETE FOUNDATIONS, A UFER GROUND SHALL BE INSTALLED IN THE FOOTING PER CEC 250.52 (A)(3).
7. OTHER GROUNDING METHODS IDENTIFIED IN CEC 250 SHALL BE ACCEPTABLE MEANS TO ACHIEVE ADEQUATE GROUNDING OF METAL BUILDINGS IN COMPLIANCE WITH THE ABOVE.
8. SEE SPECIFICATIONS FOR TESTING OF GROUNDING REQUIRED.

tBP architecture planning interiors
LICENSED ARCHITECT KINGSLEY L. HSIEH NO. C34497 REN. 8-31-19 STATE OF CA
tBP/Architecture
4611 Teller Avenue
Newport Beach, CA 92660
ph: 949.673.0300 fx: 949.732.3895
architect

PROFESSIONAL ENGINEER ELECTRICAL 10372 exp. 09-30-18 STATE OF CALIFORNIA
FBA Engineering
Consulting Electrical Engineers
150 Paularino Avenue Suite A120
Costa Mesa, CA 92626
949.852.9566 • 949.852.1657 (fax)
fbaeng.com
FBA Job Number: 212.214
consultant

FILE NO.:
IDENTIFICATION STAMP
DIVISION OF THE STATE ARCHITECT
DEPARTMENT OF GENERAL SERVICES
AC. _____ FLS _____ SS _____
DATE _____

DEPARTMENT OF GENERAL SERVICES
DSA Los Angeles Regional Office
700 N. Alameda Street, Suite 5-500
Los Angeles, California 90012
ph: (213)897-3995 fx: (213)897-3159/0726

DUNSMORE ELEMENTARY SCHOOL RELOCATABLE CLASSROOMS

GLENDALE UNIFIED SCHOOL DISTRICT
4717 DUNSMORE AVE.
LA CRESCENTA, CA 91214

owner

tBP project number : 20967.00
file name:
drawn by: checked by:
date: March 2017

Rev:	date:	description:

THIS DRAWING AND THE DESIGNS, DEPICTIONS, IDEAS AND OTHER INFORMATION CONTAINED HEREIN CONSTITUTE UNPUBLISHED WORK OF tBP/ARCHITECTURE AND SHALL REMAIN THE PROPERTY OF tBP/ARCHITECTURE IN PERPETUITY. NO PART THEREOF SHALL BE REPRODUCED, DISCLOSED, DISTRIBUTED, SOLD, PUBLISHED OR OTHERWISE USED IN ANY WAY WITHOUT THE ADVANCED EXPRESS WRITTEN CONSENT OF tBP/ARCHITECTURE.

drawing title:
SINGLE LINE DIAGRAM AND DETAILS

drawing no.:
E0.2
drawing of

FBA Engineering / Plot Date: 4/25/2017 11:01 AM / Plotted by: Brandon Nguyen / Drawing Location: I:\212\214\E0-2_212214.dwg

FIRE ALARM BATTERY CALCULATIONS

FIRE ALARM CONTROL PANEL "FACP2"

DEVICE	STAND-BY CURRENT	ALARM CURRENT
(1) CONTROL	0.275	0.400
(1) REMOTE MICROPHONE	0.040	0.400
(10) SMOKE DETECTOR	0.003	0.060
(10) HEAT DETECTOR	0.003	0.060
TOTAL	0.321	0.920

TOTAL NEW STANDBY CURRENT X 60 HOURS = 0.321A x 60 HOURS = 19.26 A-HR
TOTAL NEW ALARM CURRENT X 10 MINUTES = 0.920A x 0.167HR = 0.154 A-HR

TOTAL MINIMUM AMPERE - HOUR RATING OF BATTERIES = 19.414A-HR

NOTES:

1. BATTERY CALCULATION SHALL BE BASED ON A MINIMUM OF 60.0 HOURS STANDBY AND 10 MINUTES ALARM.
2. PROVIDE A MINIMUM OF A 50 A-HR OF TOTAL BATTERY STANDBY POWER FOR FIRE ALARM CONTROL PANEL.

EXPANDER PANEL "XPR"

DEVICE	STAND-BY CURRENT	ALARM CURRENT
(1) CONTROL	0.091	0.145
(4) 75cd STROBE	——	0.688
(2) 30cd STROBE	——	0.188
	0.091	1.001

TOTAL STANDBY CURRENT X 60 HOURS = 0.091A x 60 HOURS = 5.460 A-HR
TOTAL NEW ALARM CURRENT X 10 MINUTES = 1.001 x 0.167HR = 0.167 A-HR

TOTAL MINIMUM AMPERE - HOUR RATING OF BATTERIES = 5.627A-HR

NOTES:

1. BATTERY CALCULATION SHALL BE BASED ON A MINIMUM OF 60.0 HOURS STANDBY AND 10 MINUTES ALARM.
2. PROVIDE A MINIMUM OF A 7 A-HR OF TOTAL BATTERY STANDBY POWER FOR FIRE ALARM CONTROL PANEL.

DIGITAL AUDIO AMPLIFIER "AMP1"

DEVICE	STAND-BY CURRENT	ALARM CURRENT
(7) CONTROLS	0.400	0.500
(0) 0.25W SPEAKER	——	0.020
(7) 0.50W SPEAKER	——	0.280
(4) 1W SPEAKER	——	0.160
(0) 2W SPEAKER	——	0.000
	0.400	0.800

TOTAL STANDBY CURRENT X 60 HOURS = 0.400 A x 60 HOURS = 24.000 A-HR
TOTAL NEW ALARM CURRENT X 15 MINUTES = 0.800 A x 0.25 HR = 0.200 A-HR

TOTAL MINIMUM AMPERE - HOUR RATING OF BATTERIES = 24.200 A-HR

NOTES:

1. BATTERY CALCULATION SHALL BE BASED ON A MINIMUM OF 60.0 HOURS STANDBY AND 15 MINUTES ALARM.
2. PROVIDE A MINIMUM OF 40 A-HR OF TOTAL BATTERY STANDBY POWER FOR FIRE ALARM CONTROL PANEL.

FIRE ALARM VOLTAGE DROP CALCULATION

INDICATING CIRCUIT #	SERVICE TO	CONTROL PANEL TO BUILDING LENGTH FEET	CONTROL PANEL TO BUILDING CONDUCTOR SIZE (AWG)	DEVICE LOADS AMPS	LOAD CURRENT AMPS	VOLTS DROPPED PERCENT
V1	VISUAL DEVICE	200'	12	4 @0.167 2 @0.094	0.668	1.841
S1	SPEAKER DEVICE	200'	18	7 @0.040 2 @0.094	0.300	1.143

FORMULA: $\frac{\text{AMPS x DISTANCE x 21.6}}{\text{CIRC. MILS.}} \times \frac{100}{\text{VOLTS}}$ = PERCENT DROP

CIRCUIT V1: $\frac{0.668 \times 200' \times 21.6}{6530} \times \frac{100}{24}$ = 1,841

CIRCUIT S1: $\frac{0.300 \times 200' \times 21.6}{1620} \times \frac{100}{70}$ = 1.143

PULL STATION/HORN/STROBE ELEVATION

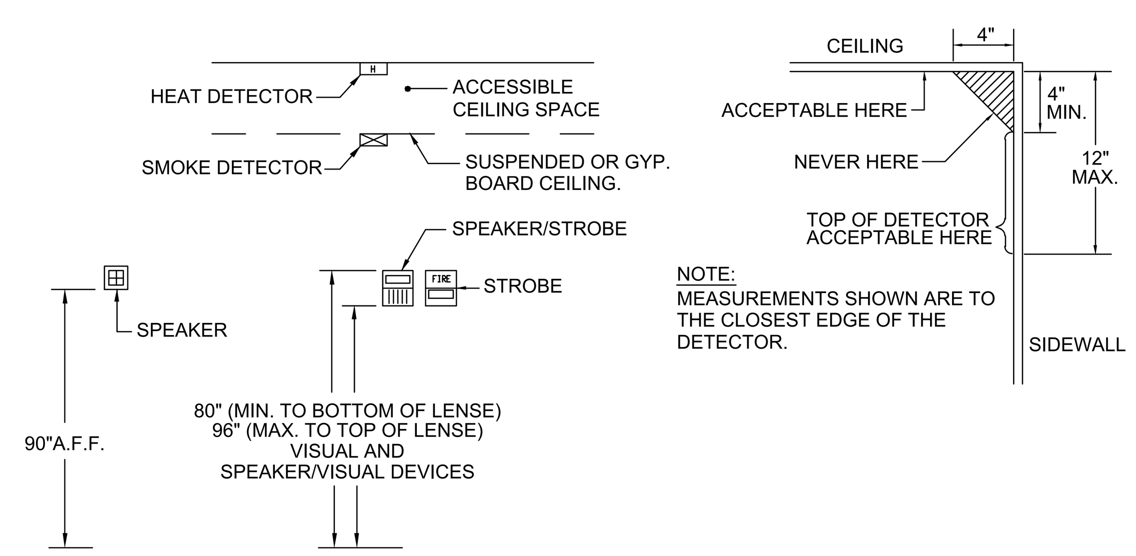

FIRE ALARM EQUIPMENT SCHEDULE

ITEM DESCRIPTION	SYMBOL	MOUNTING	CATALOG NUMBERS	CSFM LISTING NUMBERS	NOTES
EXISTING FIRE ALARM CONTROL PANEL "FACP1"	(E)	+48"	NOTIFIER AFP 1010	7165-0028:0140	NONE LISTED A#107385
FIRE ALARM CONTROL PANEL WITH BUILT-IN DIGITAL VOICE COMMANDER AND PAGING MICROPHONE		+48"	NOTIFIER NSF2-640	7165-0028:0243	0.2745A 0.400A
FIRE ALARM REMOTE MICROPHONE "RM"		+48"	NOTIFIER DVC-RPU	7165-0028:0243	0.040A 0.160A
FIRE ALARM INTELLIGENT AMPLIFIER "AMP1"		+48"	NOTIFIER DAA2 SERIES	7165-0028:0243	0.085A 0.525A
FIRE ALARM NETWORK CONTROL ANNUNCIATOR "ANN"		+48"	NOTIFIER NCA-2	7165-0028:0243	0.220A 0.220A
MONITOR MODULE	MM	--	NOTIFIER FMM-1	7165-0028:0243	0.0003A 0.006A
CONTROL MODULE	CM	--	NOTIFIER FCM-1	7165-0028:0243	0.0003A 0.006A
FIRE ALARM POWER SUPPLY "XPR"		+48"	NOTIFIER FCPS-24S6	7315-0028:0225	0.091A 0.145A
SMOKE DETECTOR ON FLUSH CEILING MOUNTED OUTLET		CEILING	NOTIFIER FSP-851 B210LP BASE	7272-0028:0206	0.0003A 0.006A
HEAT DETECTOR ON FLUSH CEILING MOUNTED OUTLET		ATTIC	NOTIFIER FST-851R B210LP BASE	7270-0028:0196	0.0003A 0.006A
WEATHERPROOF SPEAKER ON WEATHERPROOF SURFACE MOUNTED OUTLET BOX	WP 1W	+90"	SYSTEM SENSOR SPRK	7320-1653:0201	0.040A
COMBINATION SPEAKER/VISUAL STROBE DEVICE ON FLUSH CEILING MOUNTED OUTLET BOX.	0.25W 1W 75cd 30cd	CEILING	SYSTEM SENSOR SPSC	7320-1653:0201	30,75 CANDELA PER UL MINIMUM PER U.L. STANDARD 1971 0.094A,0.158A 0.010A,0.040A

FIRE ALARM SYSTEM NOTES

FIRE ALARM COMPLETE PLAN SUBMITTAL

1.0 PROJECT INFORMATION

A. OCCUPANCY GROUP

REFER TO ARCHITECTURAL DRAWING.

B. CONSTRUCTION TYPE

REFER TO ARCHITECTURAL DRAWING.

C. PENETRATIONS OF FIRE RATED WALLS SHALL BE PROTECTED IN ACCORDANCE WITH CALIFORNIA BUILDING CODE, PART 2, CHAPTER 7, TITLE 24. REFER TO THE ARCHITECTURAL PLANS FOR FIRE-RATE CORRIDOR(S), OCCUPANCY SEPARATION(S) AND AREA SEPARATION WALL(S).

D. UPON COMPLETION OF SYSTEM INSTALLATION, THE SYSTEM SHALL BE TESTED IN THE PRESENCE OF AND IN A MANNER ACCEPTABLE TO THE ENFORCING AGENCY.

E. PROVIDE A STATEMENT OF COMPLIANCE WHEN REQUESTING INSPECTION CFC 901.2.1

F. THE FIRE ALARM SYSTEM DESIGN FOR THIS PROJECT IS MANUAL SYSTEM.

2.0 APPLICABLE CODES AND STANDARDS

A. APPLICABLE CODES AS OF JANUARY 1, 2014

2013 BUILDING STANDARDS ADMINISTRATIVE CODE, PART 1, TITLE 24 C.C.R.
2013 CALIFORNIA BUILDING CODE (CBC), PART 2, TITLE 24 C.C.R.;

2013 CALIFORNIA AMENDMENTS)
2013 CALIFORNIA ELECTRICAL CODE (CEC), PART 3, TITLE 24 C.C.R.; (2011 NATIONAL ELECTRICAL CODE AND 2013 CALIFORNIA AMENDMENTS)
2013 CALIFORNIA MECHANICAL CODE (CMC), PART 4, TITLE 24 C.C.R.; (2012 UNIFORM MECHANICAL CODE AND 2013 CALIFORNIA AMENDMENTS)
2013 CALIFORNIA PLUMBING CODE (CPC), PART 5, TITLE 24 C.C.R.; (2012 UNIFORM PLUMBING CODE AND 2013 CALIFORNIA AMENDMENTS)
2013 CALIFORNIA FIRE CODE (CFC), PART 9, TITLE 24 C.C.R.: (2012 INTERNATIONAL FIRE CODE AND 2013 CALIFORNIA AMENDMENTS)
2013 CALIFORNIA REFERENCED STANDARDS CODE, PART 12, TITLE 24 C.C.R. TITLE 19, CCR, PUBLIC SAFETY, STATE FIRE MARSHAL REGULATIONS.
2013 CALIFORNIA ENERGY CODE (CEC),PART 6, TITLE 24 C.C.R.
2007 ASME A17.1 (W/A17.1A/CSA B44A-08 ADDENDA) SAFETY CODE FOR ELEVATORS AND ESCALATORS

PARTIAL LIST OF APPLICABLE STANDARDS:

NFPA 13 AUTOMATIC SPRINKLER SYSTEMS 2013 EDITION
NFPA 14 STANDPIPE SYSTEMS 2013 EDITION
NFPA 17 DRY CHEMICAL EXTINGUISHING SYSTEMS 2013 EDITION
NFPA 17A WET CHEMICAL SYSTEMS 2013 EDITION
NFPA 20 STATIONARY PUMPS 2013 EDITION
NFPA 24 PRIVATE FIRE MAINS (INCLUDED IN 2002 NFPA 13) 2013 EDITION
NFPA 72 NATIONAL FIRE ALARM CODE (CALIFORNIA AMENDED) 2013 EDITION (NOTE SEE UL STANDARD 1971 FOR "VISUAL DEVICES")

NFPA 80 FIRE DOOR AND OTHER OPENING PROTECTIVES 2013 EDITION

NFPA 253 CRITICAL RADIANT FLUX OF FLOOR COVERING SYSTEMS 2006 EDITION
NFPA 2001 CLEAN AGENT FIRE EXTINGUISHING SYSTEMS 2012 EDITION

REFERENCE CODE SECTION FOR NFPA STANDARDS-2013 CBC (SFM) CHAPTER 35. SEE CHAPTER 35 FOR STATE OF CALIFORNIA AMENDMENTS TO NFPA STANDARDS.

3.0 UPON RECEIPT OF THE CERTIFICATE OF COMPLIANCE, THE INSTALLER SHALL SUPPLY THE OWNER WITH A WRITTEN OPERATING, TESTING AND MAINTENANCE INSTRUCTIONS, POINT-TO-POINT AS BUILD DRAWINGS AND EQUIPMENT SPECIFICATIONS.

4.0 NFPA 72 CHAPTER 10,14 INSPECTION TESTING AND MAINTENANCE (2013) COMPLETE THE INSPECTION AND TESTING FORM IN ITS ENTIRETY SUBMIT A COPY TO THE DISTRICT, ARCHITECT AND DSA DIVISION OF FIRE AND LIFE SAFETY.

5.0 MANUAL FIRE ALARM BOXES SHALL COMPLY WITH 2013 CBC.

FIRE ALARM NOTE:
FIRE ALARM SUBMITTAL IS A COMPLETE PLAN SUBMITTAL IN ACCORDANCE WITH PROJECT SUBMITTAL GUIDELINE, GL-2(FLS) DATE 2/10/11

FIRE ALARM SINGLE LINE RISER DIAGRAM

NOTE:
1. ALL EQUIPMENT SHOWN DASHED IS EXISTING. ALL OTHER EQUIPMENT SHALL BE PROVIDED UNDER THIS CONTRACT.

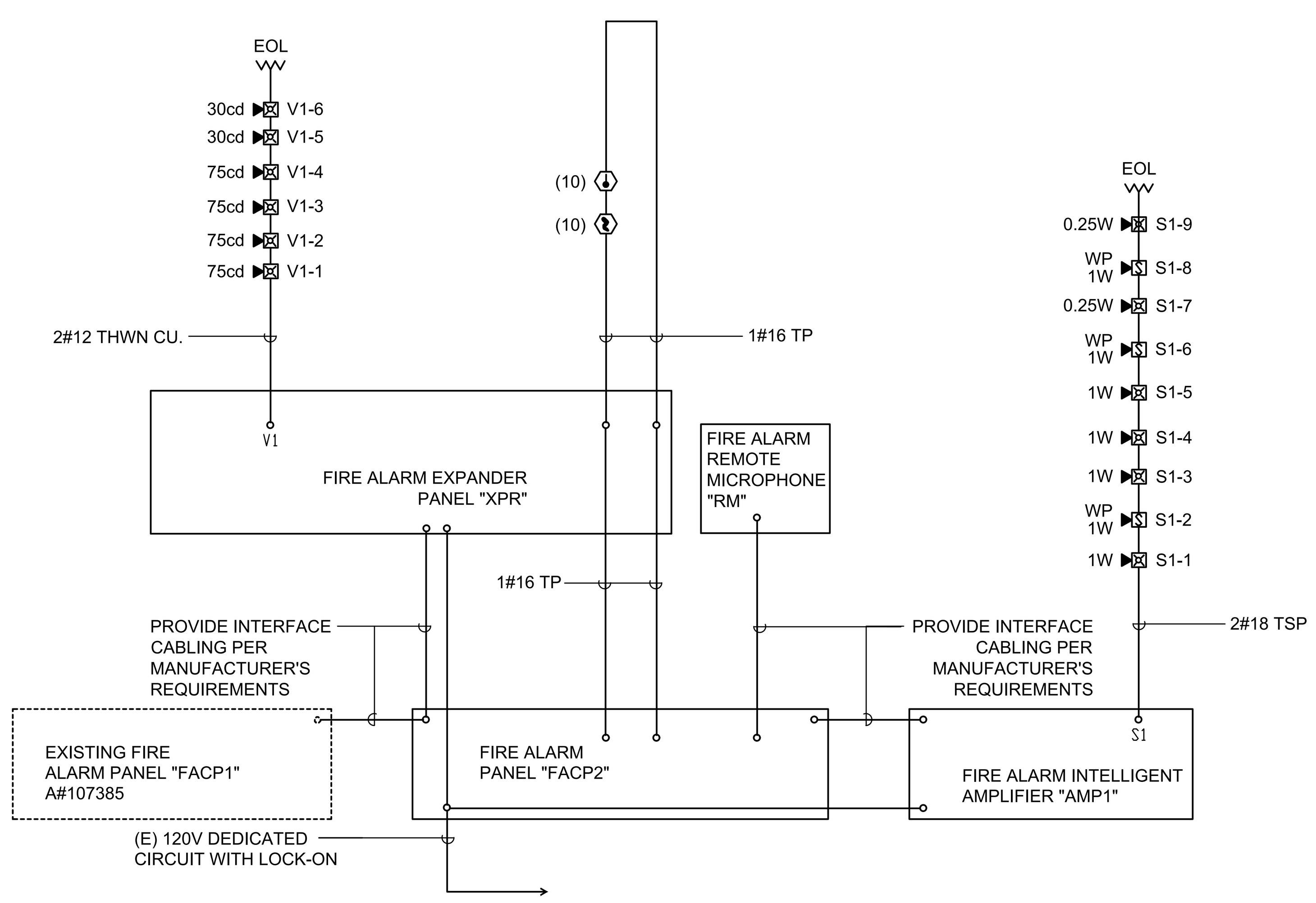

FIRE ALARM WIRING DIAGRAM

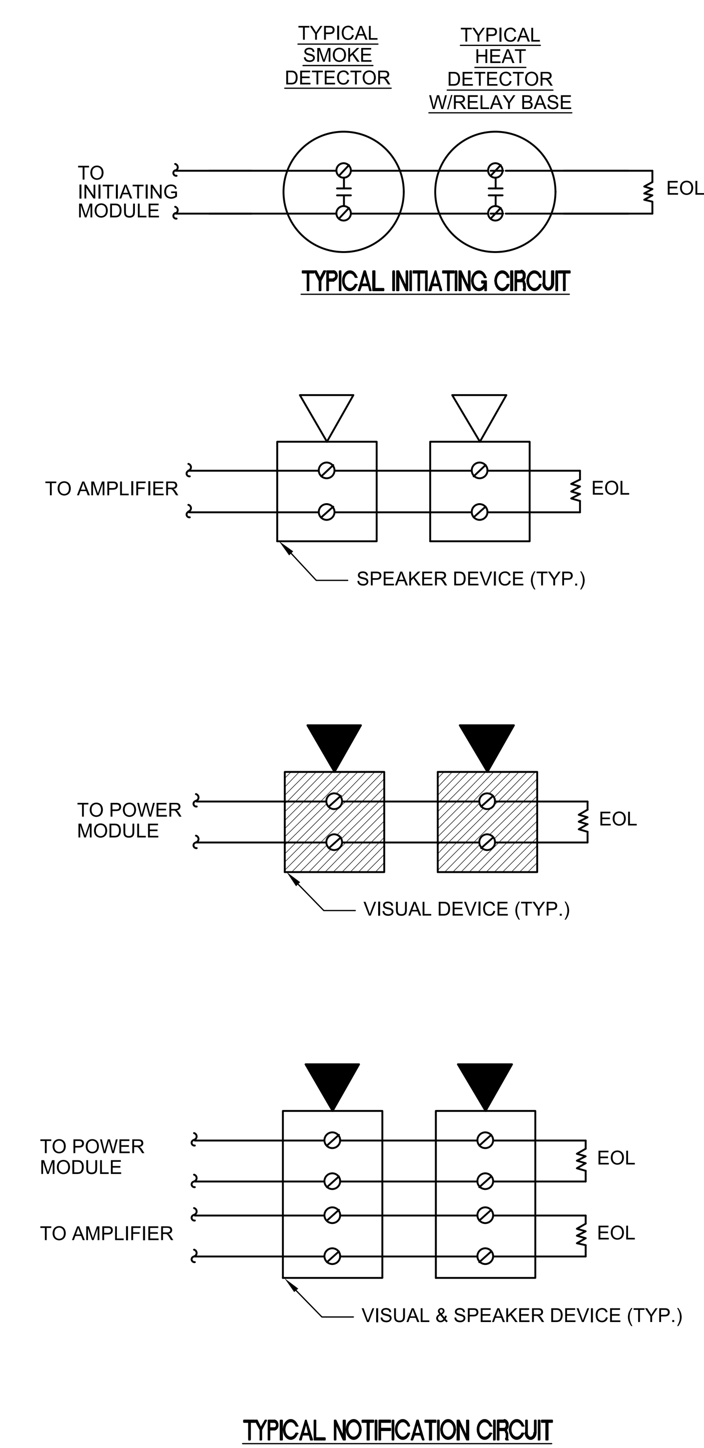

FIRE ALARM SEQUENCE OF OPERATION

ACTION \ DEVICE	SMOKE DETECTOR	AC POWER FAILURE AT NEW "FACP"	HEAT DETECTOR
SOUND ALARM AT "FACP"	YES	NO	YES
ACTIVATE RELAY FOR OFF-SITE MONITORING	YES	YES	YES
SOUND TROUBLE BUZZER AT "FACP"	ON WIRING FAULT	YES	ON WIRING FAULT
ANNUNCIATE AT "FACP"	YES	YES	YES
NOTIFICATION APPLIANCES VISUAL AND AUDIO	YES	NO	YES

tBP architecture planning interiors
tBP/Architecture
4611 Teller Avenue
Newport Beach, CA 92660
ph: 949.673.0300 fx: 949.732.3895
LICENSED ARCHITECT HUNG L. CHENG NO. C34187 REN. 4-30-19 STATE OF CALIFORNIA
architect
REGISTERED PROFESSIONAL ENGINEER STEPHEN R. ... No. E 10372 Exp. 09-30-18 ELECTRICAL STATE OF CALIFORNIA
FBA Engineering
Consulting Electrical Engineers
150 Paularino Avenue Suite A120
Costa Mesa, CA 92626
949.852.9995 • 949.852.1657 (fax)
fbaengr.com
FBA Job Number: 212.214
consultant

FILE NO.:
IDENTIFICATION STAMP
DIVISION OF THE STATE ARCHITECT
DEPARTMENT OF GENERAL SERVICES
AC _______ FLS _______ SS _______
DATE _______

DEPARTMENT OF GENERAL SERVICES
DSA Los Angeles Regional Office
700 N. Alameda Street, Suite 5-500
Los Angeles, California 90012
ph: (213)897-3995 fx: (213)897-3159/0726

DUNSMORE ELEMENTARY SCHOOL
RELOCATABLE CLASSROOMS
GLENDALE UNIFIED SCHOOL DISTRICT
4717 DUNSMORE AVE.
LA CRESCENTA, CA 91214
owner

tBP project number : 20967.00
file name:
drawn by: checked by:
date: March 2017
Rev: date: description:

THIS DRAWING AND THE DESIGNS, DEPICTIONS, IDEAS AND OTHER INFORMATION CONTAINED HEREIN CONSTITUTE UNPUBLISHED WORK OF tBP/ARCHITECTURE AND SHALL REMAIN THE PROPERTY OF tBP/ARCHITECTURE IN PERPETUITY. NO PART THEREOF SHALL BE REPRODUCED, DISCLOSED, DISTRIBUTED, SOLD, PUBLISHED OR OTHERWISE USED IN ANY WAY WITHOUT THE ADVANCED EXPRESS WRITTEN CONSENT OF tBP/ARCHITECTURE.

drawing title:
FIRE ALARM RISER DIAGRAM AND CALCULATIONS

drawing no.:
E0.3
drawing of

FBA Engineering / Plot Date: 4/25/2017 11:01 AM / Plotted by: Brandon Nguyen / Drawing Location: I:\212\214\E0-3_212214.dwg

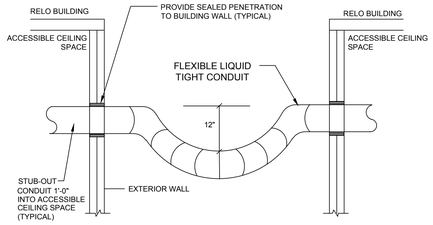

NOTES:

TO BE USED WHEN CONNECTING TWO BUILDINGS FOR NO MORE THAN 6' SEPARATION. SIZE OF CONDUIT AS REQUIRED. FOR DISTANCES IN EXCESS OF 6' PROVIDE UNDERGROUND INSTALLATION.

CONDUIT SLEEVE SEISMIC DETAIL

SCALE NONE | 3

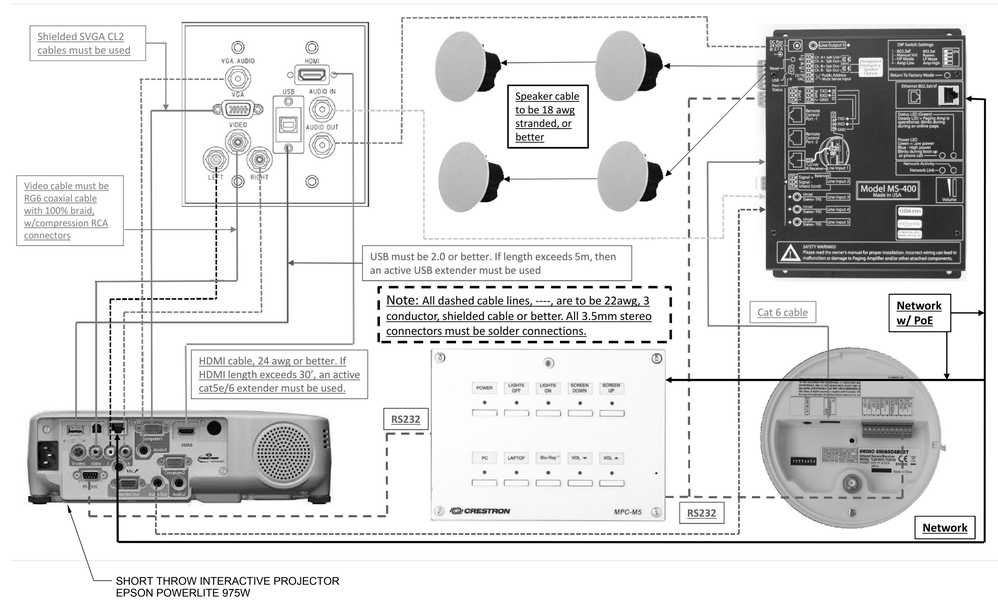

NOTE:

PROVIDE COMPLETE AUDIO/VIDEO SYSTEM INCLUDING EPSON POWERLITE 975W SHORT THROW INTERACTIVE PROJECTOR, LV COMPONENTS, TEACHERS INPUTS, AND CEILING SPEAKERS, ETC. AND CONNECT AS REQUIRED FOR A COMPLETE AND OPERABLE SYSTEM.

AUDIO/VIDEO SYSTEM (TYPICAL FOR EACH CLASSROOM)

SCALE NONE | 1

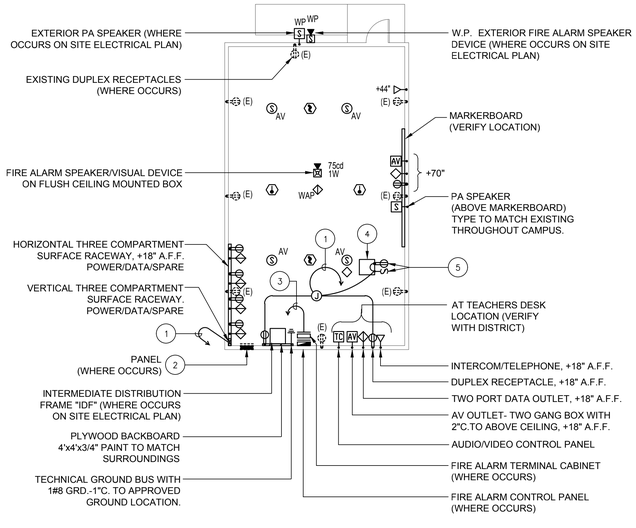

PLAN NOTES:

1. PROVIDE 4#12, 1#12 GRD. - 3/4"C. TO PANELBOARD SUPPLIED WITH BUILDING. PROVIDE TWO(2) 20 AMP, 1 POLE CIRCUIT BREAKERS IN AVAILABLE SPACE AND CONNECT AS REQUIRED.
2. PANELBOARD SUPPLIED WITH BUILDING. FIELD VERIFY EXACT LOCATION (TYPICAL).
3. PROVIDE 2#12, 1#12 - 1/2"C. TO PANELBOARD SUPPLIED WITH BUILDING. PROVIDE ONE(1) 20 AMP, 1 POLE CIRCUIT BREAKER IN AVAILABLE SPACE AND CONNECT AS REQUIRED.
4. PROVIDE ADJUSTABLE, HEAVY DUTY DROP IN 2' X 2' CEILING ACCESS PANEL, BMS MODEL DCP150 OR EQUAL, IN EACH CLASSROOM NEAR THE TEACHER'S DESK LOCATION FOR MOUNTING OF THE CLASSROOM AUDIO-VISUAL EQUIPMENT AND DATA OUTLETS LOCATED ABOVE THE CEILING. TYPICAL FOR EACH CLASSROOM.
5. PROVIDE ONE(1) DUPLEX RECEPTACLE OUTLET AND ON/OFF CONTROL SWITCH AND INSTALL IN FLUSH IN CEILING ACCESS PANEL.

NOTE:

VERIFY EXACT LOCATION OF EQUIPMENT WITH ARCHITECT/SCHOOL DISTRICT PRIOR TO ROUGH-IN.

TYPICAL MODULAR BUILDING ELECTRICAL PLAN

SCALE 1/8"=1'-0" | 2

tBP architecture planning interiors
IBP/Architecture
4611 Teller Avenue
Newport Beach, CA 92660
ph: 949.673.0300 fx: 949.732.3895
architect

FBA Engineering
Consulting Electrical Engineers
150 Pacifico Avenue Suite A120
Costa Mesa, CA 92626
949.852.9566 • 949.852.1657 (fax)
fbaeng.com
FBA Job Number: 212.214
consultant

FILE NO.:
IDENTIFICATION STAMP
DIVISION OF THE STATE ARCHITECT
DEPARTMENT OF GENERAL SERVICES
AC. _____ FLS _____ SS _____
DATE _____

DEPARTMENT OF GENERAL SERVICES
DSA Los Angeles Regional Office
700 N. Alameda Street, Suite 5-500
Los Angeles, California 90012
ph: (213)897-3995 fx: (213)897-3159/0726

DUNSMORE ELEMENTARY SCHOOL RELOCATABLE CLASSROOMS

GLENDALE UNIFIED SCHOOL DISTRICT
4717 DUNSMORE AVE.
LA CRESCENTA, CA 91214

owner

tBP project number : 20967.00
file name:
drawn by: checked by:
date: March 2017

Rev:	date:	description:

THIS DRAWING AND THE DESIGNS, DEPICTIONS, IDEAS AND OTHER INFORMATION CONTAINED HEREIN CONSTITUTE UNPUBLISHED WORK OF tBPARCHITECTURE AND SHALL REMAIN THE PROPERTY OF tBPARCHITECTURE IN PERPETUITY. NO PART THEREOF SHALL BE REPRODUCED, DISCLOSED, DISTRIBUTED, SOLD, PUBLISHED OR OTHERWISE USED IN ANY WAY WITHOUT THE ADVANCED EXPRESS WRITTEN CONSENT OF tBPARCHITECTURE.

drawing title:
TYPICAL MODULAR BUILDING ELECTRICAL PLAN AND DETAILS

drawing no.:
E0.4
drawing of

FBA Engineering / Plot Date: 4/25/2017 11:02 AM / Plotted by: Brandon Nguyen / Drawing Location: I:\212\214\ED\4_212214.dwg

STATE OF CALIFORNIA
OUTDOOR LIGHTING
CEC-NRCC-LTO-01-E (Revised 04/16) — CALIFORNIA ENERGY COMMISSION

CERTIFICATE OF COMPLIANCE — NRCC-LTO-01-E
Outdoor Lighting — (Page 1 of 4)
Project Name: Dunsmore Elementary School — Date Prepared: 04-12-17

A. General Information

Project Address: 4717 Dunsmore Ave., La Crescenta CA, 91214	Total Illuminated Hardscape Area: 4000
Phase of Construction: [X] New Construction [X] Addition [ ] Alteration	
Outdoor Lighting Zone (LZ) [ ] LZ-1 [ ] LZ-2 [X] LZ-3 [ ] LZ-4	
I have confirmed with the AHJ which LZ applies to this site. For default lighting zone designations, see Title 24 Part 6, §10-114	

B. Lighting Compliance Documents (check box for each document included)

For detailed instructions on the use of this and all Energy Efficiency Standards compliance documents, refer to the Nonresidential Manual published by the California Energy Commission.

- [X] NRCC-LTO-01-E — Certificate of Compliance
- [X] NRCC-LTO-02-E — Outdoor Lighting Controls Certificate of Compliance
- [X] NRCC-LTO-03-E — Outdoor Lighting Power Allowance Certificate of Compliance
- [ ] NRCC-LTO-04-E — Outdoor Lighting Existing Conditions Certificate of Compliance

C. Summary of Allowed Outdoor Lighting Power

		Watts
01	**Sum Total ALLOWED** Outdoor Lighting Wattage from NRCC-LTO-03-E, page 1 Alterations with NO increase of connected lighting load may instead use the allowed wattage from NRCC-LTO-04, page 2.	968
	Complies ONLY if **Installed** (Box 02) ≤ **Allowed** (Box 01)	
02	**Sum Total INSTALLED** Outdoor Lighting Wattage from NRCC-LTO-01-E, page 3.	120

D. Declaration of Required Installation Certificates
Declare by checking all Installation Certificates that will be submitted. (Retain copies and verify compliance documents are completed and signed.)

- [ ] NRCI-LTO-01-E - Must be submitted for all buildings — [ ] Field Inspector
- [ ] NRCI-LTO-02-E - Must be submitted for a lighting control system, or for an Energy Management Control System (EMCS), to be recognized for compliance. — [ ] Field Inspector

E. Declaration of Required Certificates of Acceptance
Declare by checking all of the Certificates of Acceptance that will be submitted. (Retain copies and verify compliance documents are completed and signed.)

- [ ] NRCA-LTO-02-A - Must be submitted for outdoor lighting controls. — [ ] Field Inspector

F. Schedule of Luminaires Exempt from the Outdoor Lighting Power Requirements in §140.7

01	02
Name or Symbol	Description of exempt luminaire in accordance with the exemptions

STATE OF CALIFORNIA
OUTDOOR LIGHTING
CEC-NRCC-LTO-01-E (Revised 04/16) — CALIFORNIA ENERGY COMMISSION

CERTIFICATE OF COMPLIANCE — NRCC-LTO-01-E
Outdoor Lighting — (Page 2 of 4)
Project Name: Dunsmore Elementary School — Date Prepared: 04-12-17

G. Schedule of Luminaires Exempt from the Cutoff Requirements in §130.2(b)

01	02
Name or Symbol	Description of exempt luminaire in accordance with the exemptions

H. Schedule of Luminaires Exempt from the Outdoor Lighting Control Requirements in §130.2(c)

01	02
Name or Symbol	Description of exempt luminaire in accordance with the exemptions

STATE OF CALIFORNIA
OUTDOOR LIGHTING
CEC-NRCC-LTO-01-E (Revised 04/16) — CALIFORNIA ENERGY COMMISSION

CERTIFICATE OF COMPLIANCE — NRCC-LTO-01-E
Outdoor Lighting — (Page 3 of 4)
Project Name: Dunsmore Elementary School — Date Prepared: 04-12-17

I. Outdoor Lighting Schedule and Field Inspection Energy Checklist

Luminaire Schedule		Installed Watts					Location	Cutoff	Field Inspector	
01	02	03	04		05	06	07	08	09	
Name or Item Tag	Complete Luminaire Description	Watts per Luminaire	How wattage was determined: CEC Default from NA8	According to §130.0(c)	Number of Luminaires	Total Installed Watts in this area (03 x 05)	Primary Function area in which these luminaires are installed (Outdoor Lighting Zone)	BUG Rating	Pass	Fail
SL1	LED WALL LUMINAIRE	24	☐	☒	5	120	HARDSCAPE	UH: UL: FVH: BVH: FH: BH:	○	○
			☐	☐				UH: UL: FVH: BVH: FH: BH:	○	○
			☐	☐				UH: UL: FVH: BVH: FH: BH:	○	○
					INSTALLED WATTS PAGE TOTAL:		Enter sum total of all pages (**Sum Total INSTALLED** Outdoor lighting wattage) into NRCC-LTO-01-E; Page 1			

STATE OF CALIFORNIA
OUTDOOR LIGHTING
CEC-NRCC-LTO-01-E (Revised 04/16) — CALIFORNIA ENERGY COMMISSION

CERTIFICATE OF COMPLIANCE — NRCC-LTO-01-E
Outdoor Lighting — (Page 4 of 4)
Project Name: Dunsmore Elementary School — Date Prepared: 04-12-17

DOCUMENTATION AUTHOR'S DECLARATION STATEMENT
1. I certify that this Certificate of Compliance documentation is accurate and complete.

Documentation Author Name: Stephen R. Zajicek PE	Documentation Author Signature:
Company: FBA Engineering	Signature Date: 04-12-17
Address: 150 Paularino Ave., Suite A120	CEA Certification Identification (if applicable): N/A
City/State/Zip: Costa Mesa, CA 92626	Phone: (949) 852 9995

RESPONSIBLE PERSON'S DECLARATION STATEMENT
I certify the following under penalty of perjury, under the laws of the State of California:
1. The information provided on this Certificate of Compliance is true and correct.
2. I am eligible under Division 3 of the Business and Professions Code to accept responsibility for the building design or system design identified on this Certificate of Compliance (responsible designer).
3. The energy features and performance specifications, materials, components, and manufactured devices for the building design or system design identified on this Certificate of Compliance conform to the requirements of Title 24, Part 1 and Part 6 of the California Code of Regulations.
4. The building design features or system design features identified on this Certificate of Compliance are consistent with the information provided on other applicable compliance documents, worksheets, calculations, plans and specifications submitted to the enforcement agency for approval with this building permit application.
5. I will ensure that a completed signed copy of this Certificate of Compliance shall be made available with the building permit(s) issued for the building, and made available to the enforcement agency for all applicable inspections. I understand that a completed signed copy of this Certificate of Compliance is required to be included with the documentation the builder provides to the building owner at occupancy.

Responsible Designer Name: Stephen R. Zajicek PE	Responsible Designer Signature:
Company : FBA Engineering	Date Signed: 04-12-17
Address: 150 Paularino Ave., Suite A120	License: E10372
City/State/Zip: Costa Mesa, CA 92626	Phone: (949) 852 9995

STATE OF CALIFORNIA
OUTDOOR LIGHTING CONTROLS
CEC-NRCC-LTO-02-E (Revised 08/16) — CALIFORNIA ENERGY COMMISSION

CERTIFICATE OF COMPLIANCE — NRCC-LTO-02-E
Outdoor Lighting Controls — (Page 1 of 3)
Project Name: Dunsmore Elementary School — Date Prepared: 04-12-17

A. Mandatory Outdoor Lighting Control Declaration Statements
Check all that apply:
- [✓] Lighting shall be controlled by self-contained lighting control devices which are certified to the Energy Commission according to the Title 20 Appliance Efficiency Regulations in accordance with §110.9(a).
- [ ] Lighting shall be controlled by a lighting control system or energy management control system in accordance with §110.9. An Installation Certificate shall be submitted in accordance with §130.4(b).
- [✓] All lighting controls and equipment shall comply with the applicable requirements in §110.9 and shall be installed in accordance with the manufacturer's instructions in accordance with §130.0(d).
- [ ] Part-Night Outdoor Lighting Controls, as defined in Section 100.1(b), shall meet the requirements in Section 110.9(b)5.
- [ ] All outdoor incandescent luminaires rated over 100 watts, determined in accordance with Section 130.0(c), shall be controlled by a motion sensor.
- [ ] All outdoor luminaires rated for use with lamps greater than 150 lamp watts, determined in accordance with Section 130.0(c), shall comply with Uplight and Glare requirements in accordance with Section 130.2(b)
- [✓] All installed outdoor lighting shall be controlled by a photocontrol or outdoor astronomical time-switch control, or other control capable of automatically switching OFF in accordance with Section 130.2(c)1.
- [✓] All installed outdoor lighting shall be circuited and independently controlled from other electrical loads by an automatic scheduling control in accordance with Section 130.2(c)2.
- [✓] All installed outdoor lighting, where the bottom of the luminaire is mounted 24 feet or less above the ground, shall be controlled with automatic lighting controls in accordance with Section 130.2(c)3.
- [ ] For Outdoor Sales Frontage, an automatic lighting control shall be installed in accordance with Section 130.2(c)4.
- [ ] For Building Facade, Ornamental Hardscape and Outdoor Dining lighting, an automatic lighting control shall be installed in accordance with Section 130.2(c)5
- [✓] Before an occupancy permit is granted for the newly constructed building or for the addition, or for any altered outdoor lighting controls, shall be certified as meeting the Acceptance Requirements for Code Compliance in accordance with §130.4.(a). Outdoor lighting controls shall comply with the applicable requirements of Section 130.2(c) and Reference Nonresidential Appendix NA7.8.

STATE OF CALIFORNIA
OUTDOOR LIGHTING CONTROLS
CEC-NRCC-LTO-02-E (Revised 08/16) — CALIFORNIA ENERGY COMMISSION

CERTIFICATE OF COMPLIANCE — NRCC-LTO-02-E
Outdoor Lighting Controls — (Page 2 of 3)
Project Name: Dunsmore Elementary School — Date Prepared: 04-12-17

B. Mandatory Outdoor Lighting Control Schedule and Field Inspection Checklist

Outdoor Lighting Control Schedule			Standards Complying With (✓ all that apply, or leave empty if Exempted)						✓ if Acceptance Test Required	Field Inspector	
01	02	03	04	05	06	07	08	09	10	11	
Location and Application of Luminaires Being Controlled	Type/ Description of Lighting Control (i.e. outdoor motion sensor, outdoor photocontrol, outdoor astronomical time-switch control, automatic scheduling control, part-night outdoor lighting control)	# of Units	§130.2(a)	§130.2(c)1	§130.2(c)2	§130.2(c)3	§130.2(c)4	§130.2(c)5		Pass	Fail
EXTERIOR BUILDING	PHOTOCELL "ON"	11	E	✓	✓	✓	E	E	☐	○	○
TYPE SL1	TIMECLOCK "OFF"								☐	○	○
LED WALL LIGHT									☐	○	○
									☐	○	○
									☐	○	○
									☐	○	○
									☐	○	○
									☐	○	○
									☐	○	○
									☐	○	○
									☐	○	○
									☐	○	○
									☐	○	○
									☐	○	○
									☐	○	○
									☐	○	○
									☐	○	○

STATE OF CALIFORNIA
OUTDOOR LIGHTING CONTROLS
CEC-NRCC-LTO-02-E (Revised 08/16) — CALIFORNIA ENERGY COMMISSION

CERTIFICATE OF COMPLIANCE — NRCC-LTO-02-E
Outdoor Lighting Controls — (Page 3 of 3)
Project Name: Dunsmore Elementary School — Date Prepared: 04-12-17

DOCUMENTATION AUTHOR'S DECLARATION STATEMENT
1. I certify that this Certificate of Compliance documentation is accurate and complete.

Documentation Author Name: Stephen R. Zajicek PE	Documentation Author Signature:
Company: FBA Engineering	Signature Date: 04-12-17
Address: 150 Paularino Ave., Suite A120	CEA Certification Identification (if applicable): N/A
City/State/Zip: Costa Mesa, CA 92626	Phone: (949) 852 9995

RESPONSIBLE PERSON'S DECLARATION STATEMENT
I certify the following under penalty of perjury, under the laws of the State of California:
1. The information provided on this Certificate of Compliance is true and correct.
2. I am eligible under Division 3 of the Business and Professions Code to accept responsibility for the building design or system design identified on this Certificate of Compliance (responsible designer).
3. The energy features and performance specifications, materials, components, and manufactured devices for the building design or system design identified on this Certificate of Compliance conform to the requirements of Title 24, Part 1 and Part 6 of the California Code of Regulations.
4. The building design features or system design features identified on this Certificate of Compliance are consistent with the information provided on other applicable compliance documents, worksheets, calculations, plans and specifications submitted to the enforcement agency for approval with this building permit application.
5. I will ensure that a completed signed copy of this Certificate of Compliance shall be made available with the building permit(s) issued for the building, and made available to the enforcement agency for all applicable inspections. I understand that a completed signed copy of this Certificate of Compliance is required to be included with the documentation the builder provides to the building owner at occupancy.

Responsible Designer Name: Stephen R. Zajicek PE	Responsible Designer Signature:
Company : FBA Engineering	Date Signed: 04-12-17
Address: 150 Paularino Ave., Suite A120	License: E10372
City/State/Zip: Costa Mesa, CA 92626	Phone: (949) 852 9995

STATE OF CALIFORNIA
OUTDOOR LIGHTING POWER ALLOWANCES
CEC-NRCC-LTO-03-E (Revised 01/16) — CALIFORNIA ENERGY COMMISSION

CERTIFICATE OF COMPLIANCE — NRCC-LTO-03-E
Outdoor Lighting Power Allowances — (Page 1 of 4)
Project Name: Dunsmore Elementary School — Date Prepared: 04-12-17

A. OUTDOOR LIGHTING POWER ALLOWANCE SUMMARY

1. General Hardscape Lighting Power Allowance (Site Total from Section B of NRCC-LTO-03-E) — 1.
2. Additional Specific "use it or lose it" Lighting Power Allowances listed in each of these cells shall be identical to total allowed watts determined in Section C-1 to C-4 of NRCC-LTO-03-E.

PER APPLICATION from Section C-1		PER UNIT LENGTH (SALES FRONTAGE) from Section C-2		PER HARDSCAPE AREA (ORNAMENTAL LIGHTING) from Section C-3		PER SPECIFIC AREA from Section C-4.		
	+		+		+		=	2.

3. **Sum Total ALLOWED** Outdoor Lighting Wattage (add rows 1 and 2) — 3.

B. GENERAL HARDSCAPE LIGHTING POWER ALLOWANCE FROM TABLE 140.7-A

Area Wattage Allowance (AWA)				Linear Wattage Allowance (LWA)			Initial Wattage Allowance (IWA)	Total General Hardscape Lighting Allowance
01	02	03	04	05	06	07	08	09
Name of Area	Illuminated Hardscape Area	AWA Per Square Foot	AWA (B02 x B03)	Perimeter Length of General Hardscape	LPA per Linear Foot	LWA (B05 x B06)	IWA (Watts)	B04 + B07 + B08
HARDSCAPE	4,000	0.040	160	480	0.600	288	520	968
							TOTAL	968

STATE OF CALIFORNIA
OUTDOOR LIGHTING POWER ALLOWANCES
CEC-NRCC-LTO-03-E (Revised 01/16) — CALIFORNIA ENERGY COMMISSION

CERTIFICATE OF COMPLIANCE — NRCC-LTO-03-E
Outdoor Lighting Power Allowances — (Page 4 of 4)
Project Name: Dunsmore Elementary School — Date Prepared: 04-12-17

DOCUMENTATION AUTHOR'S DECLARATION STATEMENT
1. I certify that this Certificate of Compliance documentation is accurate and complete.

Documentation Author Name: Stephen R. Zajicek PE	Documentation Author Signature:
Company: FBA Engineering	Signature Date: 04-12-17
Address: 150 Paularino Ave., Suite A120	CEA Certification Identification (if applicable): N/A
City/State/Zip: Costa Mesa, CA 92626	Phone: (949) 852 9995

RESPONSIBLE PERSON'S DECLARATION STATEMENT
I certify the following under penalty of perjury, under the laws of the State of California:
1. The information provided on this Certificate of Compliance is true and correct.
2. I am eligible under Division 3 of the Business and Professions Code to accept responsibility for the building design or system design identified on this Certificate of Compliance (responsible designer).
3. The energy features and performance specifications, materials, components, and manufactured devices for the building design or system design identified on this Certificate of Compliance conform to the requirements of Title 24, Part 1 and Part 6 of the California Code of Regulations.
4. The building design features or system design features identified on this Certificate of Compliance are consistent with the information provided on other applicable compliance documents, worksheets, calculations, plans and specifications submitted to the enforcement agency for approval with this building permit application.
5. I will ensure that a completed signed copy of this Certificate of Compliance shall be made available with the building permit(s) issued for the building, and made available to the enforcement agency for all applicable inspections. I understand that a completed signed copy of this Certificate of Compliance is required to be included with the documentation the builder provides to the building owner at occupancy.

Responsible Designer Name: Stephen R. Zajicek PE	Responsible Designer Signature:
Company : FBA Engineering	Date Signed: 04-12-17
Address: 150 Paularino Ave., Suite A120	License: E10372
City/State/Zip: Costa Mesa, CA 92626	Phone: (949) 852 9995

tBP
architecture planning interiors
LICENSED ARCHITECT HUNG L. CHENG NO. C34187 REN. 4-30-19 STATE OF CALIFORNIA
tBP/Architecture
4611 Teller Avenue
Newport Beach, CA 92660
ph: 949.673.0300 fx: 949.732.3895
architect

REGISTERED PROFESSIONAL ENGINEER STEPHEN R. ZAJICEK No. E 10372 Exp. 09-30-18 ELECTRICAL STATE OF CALIFORNIA

FBA Engineering
Consulting Electrical Engineers
150 Paularino Avenue Suite A120
Costa Mesa, CA 92626
949.852.9995 • 949.852.1657 (fax)
fbaengr.com
FBA Job Number: 212.214
consultant

FILE NO.:
IDENTIFICATION STAMP
DIVISION OF THE STATE ARCHITECT
DEPARTMENT OF GENERAL SERVICES
AC ______ FLS ______ SS ______
DATE ______

DEPARTMENT OF GENERAL SERVICES
DSA Los Angeles Regional Office
700 N. Alameda Street, Suite 5-500
Los Angeles, California 90012
ph: (213)897-3995 fx: (213)897-3159/0726

DUNSMORE ELEMENTARY SCHOOL RELOCATABLE CLASSROOMS
GLENDALE UNIFIED SCHOOL DISTRICT
4717 DUNSMORE AVE.
LA CRESCENTA, CA 91214
owner

tBP project number : 20967.00
file name:
drawn by: checked by:
date: March 2017

Rev:	date:	description:

THIS DRAWING AND THE DESIGNS, DEPICTIONS, IDEAS AND OTHER INFORMATION CONTAINED HEREIN CONSTITUTE UNPUBLISHED WORK OF tBP/ARCHITECTURE AND SHALL REMAIN THE PROPERTY OF tBP/ARCHITECTURE IN PERPETUITY. NO PART THEREOF SHALL BE REPRODUCED, DISCLOSED, DISTRIBUTED, SOLD, PUBLISHED OR OTHERWISE USED IN ANY WAY WITHOUT THE ADVANCED EXPRESS WRITTEN CONSENT OF tBP/ARCHITECTURE.

drawing title:
OUTDOOR TITLE - 24

drawing no.:
E0.5
drawing of

FBA Engineering / Plot Date: 4/25/2017 11:02 AM / Plotted by: Brandon Nguyen / Drawing Location: I:\212\214\E0-5_212214.dwg

STATE OF CALIFORNIA
Electrical Power Distribution
CEC-NRCC-ELC-01-E (Revised 01/16) — CALIFORNIA ENERGY COMMISSION

CERTIFICATE OF COMPLIANCE	NRCC-ELC-01-E
Electrical Power Distribution	Page 4 of 4

Project Name: Dunsmore Elementary School — Date Prepared: 04–12–17

DOCUMENTATION AUTHOR'S DECLARATION STATEMENT

1. I certify that this Certificate of Compliance documentation is accurate and complete.

Documentation Author Name:	Stephen R. Zajicek PE	Documentation Author Signature:	SZajR
Company:	FBA Engineering	Signature Date:	04–12–17
Address:	150 Paularino Ave., Suite A120	CEA/HERS Certification Identification (if applicable):	N/A
City/State/Zip:	Costa Mesa, CA 92626	Phone:	(949) 852 9995

RESPONSIBLE PERSON'S DECLARATION STATEMENT

I certify the following under penalty of perjury, under the laws of the State of California:

1. The information provided on this Certificate of Compliance is true and correct.
2. I am eligible under Division 3 of the Business and Professions Code to accept responsibility for the building design or system design identified on this Certificate of Compliance (responsible designer).
3. The energy features and performance specifications, materials, components, and manufactured devices for the building design or system design identified on this Certificate of Compliance conform to the requirements of Title 24, Part 1 and Part 6 of the California Code of Regulations.
4. The building design features or system design features identified on this Certificate of Compliance are consistent with the information provided on other applicable compliance documents, worksheets, calculations, plans and specifications submitted to the enforcement agency for approval with this building permit application.
5. I will ensure that a completed signed copy of this Certificate of Compliance shall be made available with the building permit(s) issued for the building, and made available to the enforcement agency for all applicable inspections. I understand that a completed signed copy of this Certificate of Compliance is required to be included with the documentation the builder provides to the building owner at occupancy.

Responsible Designer Name:	Stephen R. Zajicek PE	Responsible Designer Signature:	SZajR
Company:	FBA Engineering	Date Signed:	04–12–17
Address:	150 Paularino Ave., Suite A120	License:	E10372
City/State/Zip:	Costa Mesa, CA 92626	Phone:	(949) 852 9995

STATE OF CALIFORNIA
Electrical Power Distribution
CEC-NRCC-ELC-01-E (Revised 01/16) — CALIFORNIA ENERGY COMMISSION

CERTIFICATE OF COMPLIANCE	NRCC-ELC-01-E
Electrical Power Distribution	Page 3 of 4

Project Name: Dunsmore Elementary School — Date Prepared: 04–12–17

C. Voltage Drop

Check all boxes below if he electrical power distribution system is in compliance with Section 130.5(c).

	Enforcement Agency Check that the system complies
[X] The electrical power distribution system meets the voltage drop requirement of Section 130.5(c). The maximum combined voltage drop on feeder conductors and branch circuit conductors to the farthest connected load or outlet, do not exceed 5%.	☐
[X] Voltage drop calculation documents showing compliance to Section 130.5(c) are submitted as part of the compliance document submittal.	☐

D. Circuit Controls for 120-Volt Receptacles and Controlled Receptacles

Check one or more boxes below for applicable requirements of Section 130.5(d) for the electrical power distribution system.

	Field Inspector Check that the system complies
☐ The control is capable of automatically shutting OFF the controlled receptacles when the space is typically unoccupied, either at the receptacle or circuit level. For the automatic time switch control, it incorporates an override control that allows the controlled receptacle to remain ON for no more than 2 hours when an override is initiated and an automatic holiday "shut-OFF" feature that turns OFF all loads for at least 24 hours and then resumes the normally scheduled operation. Countdown timer switches are not be used to comply with the automatic time switch control requirements. The controls meet the requirement of Section 130.5(d)1.	☐
☐ There is at least one controlled receptacle within 6 ft from each uncontrolled receptacle. Where receptacles are installed in modular furniture in open office area, at least one controlled receptacle is installed at each workstation. The receptacles meet the requirement of Section 130.5(d)2.	☐
☐ There are installed split wired receptacles with at least one controlled and one uncontrolled receptacle. Where receptacles are installed in modular furniture in open office area, at least one controlled receptacle is installed at each workstation. The receptacles meet the requirement of Section 130.5(d)2.	☐
☐ Permanent and durable marking for controlled receptacles or circuits to differentiate them from uncontrolled receptacles or circuits is provided. The markings meet the requirement of Section 130.5(d)3.	☐
☐ For hotel and motel guest rooms, there are controlled receptacles for at least one-half of the 120-volt receptacles in each guest room. Electric circuits serving controlled receptacles in guestrooms are installed to have captive key controls, occupancy sensing controls, or automatic controls so the power is switched off no longer than 30 minutes after the guest room has been vacated. The receptacles meet the requirement of Section 130.5(d)4.	☐
☐ Receptacles that are only for the following purposes are excepted from Section 130.5(d): - Receptacles specifically for refrigerators and water dispensers in kitchen areas. - Receptacles located a minimum of six ft above the floor that are specifically for clocks. - Receptacles for network copiers, fax machines, A/V and data equipment other than personal computers in copy rooms. - Receptacles on circuits rated more than 20 amperes. - Receptacles connected to an uninterruptible power supply (UPS) that are intended to be in continuous use, 24 hours per day/365 days per year, and are marked to differentiate them from other uncontrolled receptacles or circuits.	☐

STATE OF CALIFORNIA
Electrical Power Distribution
CEC-NRCC-ELC-01-E (Revised 01/16) — CALIFORNIA ENERGY COMMISSION

CERTIFICATE OF COMPLIANCE	NRCC-ELC-01-E
Electrical Power Distribution	Page 2 of 4

Project Name: Dunsmore Elementary School — Date Prepared: 04–12–17

B. Separation of Electrical Circuits for Electrical Energy Monitoring

Check all boxes below if the electrical power distribution system is in compliance with Section 130.5(b).

☐ The electrical power distribution system meets the separation of electrical circuits for electrical energy monitoring requirement of Section 130.5(b). The electrical power distribution systems is designed so that measurement devices can monitor the electrical energy usage of load types according to TABLE 130.5-B.

☐ Describe the electrical power distribution system installed and the compliance method chosen in meeting the requirement of Section 130.5(b). Use the space below to include the information. Examples of compliance methods are detailed in Nonresidential Compliance Manual Chapter 8.

Fill out Column 1 thru 3 with the compliance information.

General Information	Electrical Power Distribution System Information and Method of compliance	Electrical Service Rating	Enforcement Agency
01	02	03	04
Electrical Service Designation/Location/Description	Describe the electrical power distribution system installed and the compliance method used	kVA	Check that the system complies
			☐

Field Inspector Notes:

STATE OF CALIFORNIA
Electrical Power Distribution
CEC-NRCC-ELC-01-E (Revised 01/16) — CALIFORNIA ENERGY COMMISSION

CERTIFICATE OF COMPLIANCE	NRCC-ELC-01-E
Electrical Power Distribution	Page 1 of 4

Project Name: Dunsmore Elementary School — Date Prepared: 04–12–17

General Information

Project Address:	Climate Zone:	Conditioned Floor Area :
4717 Dunsmore Ave., La Crescenta, CA 91214	3	Unconditioned Floor Area :

Building Type: ☐ Nonresidential ☐ High-Rise Residential ☐ Hotel/Motel
[X] Schools ☐ Relocatable Public Schools ☐ Conditioned Spaces ☐ Unconditioned Spaces
Phase of Construction: ☐ New Construction [X] Addition ☐ Alteration

In the table below identify all applicable construction documents that specify the requirements for the scope of responsibility reported by this certificate. Use additional pages as needed to list all construction documents related to compliance of Section 130.5.

Document Number	Document Title/Descriptions (include description information for Table or Schedule if it contains compliance information)	Document Sheet # or Page #	Indicate which subsection of Section 130.5 is related to the document (e.g. 130.5(a) for service electrical metering)

Add Row | Remove Last

A. Service Electrical Metering

Check one of the three boxes below if the electrical power distribution system is in compliance with Section 130.5(a).

☐ For newly installed electrical service in newly constructed buildings, Service Electrical Metering is required according to Section 130.5(a). *Fill out Column 1 through 6 of table below.*

☐ For new or replacement electrical service equipment in existing buildings, Service Electrical Metering is required according to Section 141.0(b)2Pi. *Fill out Column 1 through 6 of table below.*

☐ EXCEPTION to Electrical Service Metering: Service or feeder for which the utility company provides a metering system that indicates instantaneous kW demand and kWh for a utility-defined period. *Fill out Column 1, 2 and 6 of table below with the compliance information.*

Fill out a separate line for each electrical service that is connected to the building.

Electrical Service Schedule	Electrical Service Rating	Metering Capabilities (check all that are present)					Exception to 130.5 (a)	Field Inspector
01	02	03	04	05	06	07	08	
Electrical Service Designation/ Location/Description	kVA	Instantaneous (at the time) kW	Historical peak (kW)	Tracking kWh for a user-definable period	kWh per rate period	Utility metering system	Check that the metering complies	
RELOCATABLE BUILDINGS	100 KVA	[X]	[X]	☐	☐	☐	☐	

Add Row | Remove Last

SHORT CIRCUIT AND VOLTAGE DROP CALCULATIONS

FEEDERS

DESIGNATION	FEEDER LENGTH (ft)	PHASE ϕ	CONDUCTORS Cu	SIZE	PARALLEL RUNS	CONDUIT MAG=1 NON=2	L-L VOLTAGE	L-N VOLTAGE	STARTING Isc	FEEDER AMPACITY	BUS AVAILABLE Isc 3 ϕ	BUS AVAILABLE Isc 1 ϕ L-L	BUS AVAILABLE Isc 1 ϕ L-N	VOLTAGE DROP %
Panel "P1"	10	1	Cu	#1	1	2	240	120	65,000	63	N/A	37,727	30,770	0.08
Panel "P2"	35	1	Cu	#1	1	2	240	120	65,000	63	N/A	18,413	11,350	0.28
Panel "P3"	60	1	Cu	#1	1	2	240	120	65,000	63	N/A	12,178	6,958	0.49
Panel "P4"	85	1	Cu	#1	1	2	240	120	65,000	63	N/A	9,098	5,017	0.69
Panel "P5"	110	1	Cu	#1	1	2	240	120	65,000	50	N/A	7,261	3,923	0.71
Distribution Panel "DPR"	520	3	Cu	350 kcmil	3	2	208	120	65,000	350	12,679	N/A	N/A	2.60

t.BP architecture planning interiors
tBP/Architecture
4611 Teller Avenue
Newport Beach, CA 92660
ph: 949.673.0300 fx: 949.732.3895
architect

FBA Engineering
Consulting Electrical Engineers
150 Paularino Avenue Suite A120
Costa Mesa, CA 92626
949.852.9995 • 949.852.1657 (fax)
fbaeng.com
FBA Job Number: 212.214
consultant

FILE NO.:
IDENTIFICATION STAMP
DIVISION OF THE STATE ARCHITECT
DEPARTMENT OF GENERAL SERVICES
AC._____ FLS _____ SS _____
DATE _____

DEPARTMENT OF GENERAL SERVICES
DSA Los Angeles Regional Office
700 N. Alameda Street, Suite 5-500
Los Angeles, California 90012
ph: (213)897-3995 fx: (213)897-3159/0726

DUNSMORE ELEMENTARY SCHOOL RELOCATABLE CLASSROOMS

GLENDALE UNIFIED SCHOOL DISTRICT
4717 DUNSMORE AVE.
LA CRESCENTA, CA 91214

owner

tBP project number : 20967.00
file name:
drawn by: checked by:
date: March 2017

Rev:	date:	description:

THIS DRAWING AND THE DESIGNS, DEPICTIONS, IDEAS AND OTHER INFORMATION CONTAINED HEREIN CONSTITUTE UNPUBLISHED WORK OF tBP/ARCHITECTURE AND SHALL REMAIN THE PROPERTY OF tBP/ARCHITECTURE IN PERPETUITY. NO PART THEREOF SHALL BE REPRODUCED, DISCLOSED, DISTRIBUTED, SOLD, PUBLISHED OR OTHERWISE USED IN ANY WAY WITHOUT THE ADVANCED EXPRESS WRITTEN CONSENT OF tBP/ARCHITECTURE.

drawing title:
POWER DISTRIBUTION
TITLE - 24

drawing no.:
E0.6
drawing of

FBA Engineering / Plot Date: 4/25/2017 11:02 AM / Plotted by: Brandon Nguyen / Drawing Location: I:\212\214\E0-6_212214.dwg

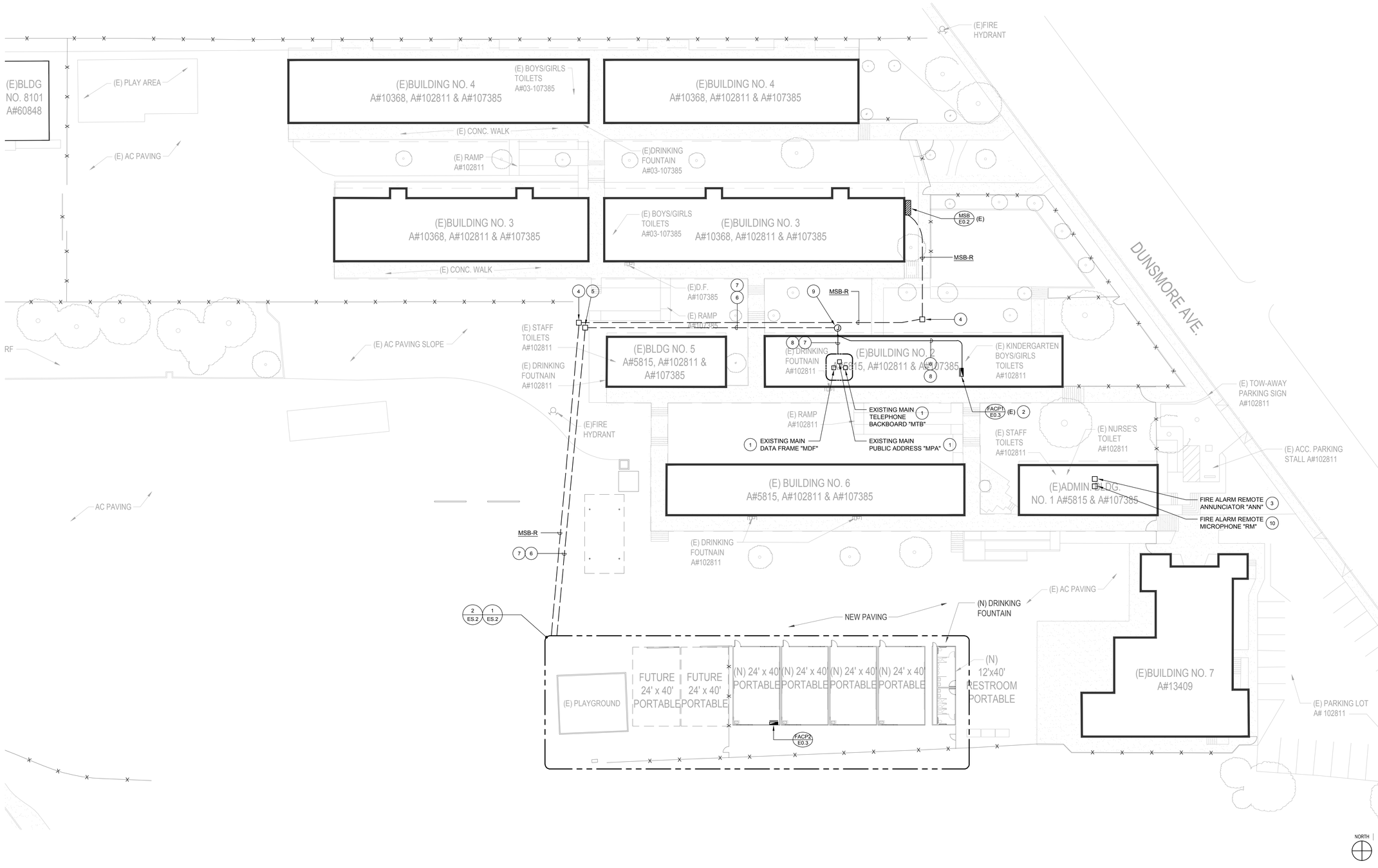

OVERALL SITE ELECTRICAL PLAN

1" = 20'-0"

1

SITE ELECTRICAL PLAN GENERAL NOTES:

1. CONTRACTOR SHALL EXERCISE CAUTION IN EXCAVATING AND TRENCHING ON THIS SITE TO AVOID EXISTING DUCTS, PIPING, CONDUITS, ETC., AND SHALL PREVENT HAZARD TO PERSONNEL AND/OR DAMAGE TO EXISTING UNDERGROUND UTILITIES OR STRUCTURES, WHETHER OR NOT SHOWN, DETAILED OR INSTALLED BY THIS OR ANY OTHER CONTRACTS. THIS CONTRACTOR SHALL IMMEDIATELY NOTIFY THE OWNER SHOULD SUCH UNIDENTIFIED CONDITIONS BE DISCOVERED. THESE DRAWINGS AND SPECIFICATIONS DO NOT INCLUDE NECESSARY COMPONENTS FOR CONSTRUCTION SAFETY.

7 PROVIDE THE FOLLOWING SIGNAL SYSTEM CONDUIT WITH SPECIFIED SYSTEM CONDUCTORS:

2"C. (DATA)
2"C. (INTERCOM/ PUBLIC ADDRESS)
2"C. (SPARE)

8 ROUTE CONDUITS ABOVE ACCESSIBLE CEILING SPACE AS REQUIRED.

9 PROVIDE FOUR (4) 8" x 8" x 6" DEEP WEATHERPROOF JUNCTION BOXES FOR FIRE ALARM, DATA, INTERCOM/ PUBLIC ADDRESS/ CLOCK, AND SPARE. MOUNT PULLBOXES ON WALL ABOVE CEILING SPACE AS REQUIRED.

10 PROVIDE FIRE ALARM REMOTE MICROPHONE ADJACENT TO FIRE ALARM REMOTE ANNUNCIATOR AND CONNECT PER MANUFACTURER'S REQUIREMENTS FOR A COMPLETE AND OPERABLE SYSTEM.

PLAN NOTES:

1 MODIFY EXISTING SIGNAL SYSTEM EQUIPMENT AS REQUIRED TO SERVE THE NEW CONSTRUCTION PROVIDE ADDITIONAL EQUIPMENT AS NEEDED FOR A COMPLETE OPERABLE SYSTEM.

2 EXISTING FIRE ALARM CONTROL PANEL PER A#61956 TO REMAIN. PROVIDE ADDITIONAL EQUIPMENT AS NEEDED FOR NETWORK WITH NEW FIRE ALARM CONTROL PANEL AS INDICATED.

3 EXISTING FIRE ALARM REMOTE ANNUNCIATOR TO BE REPLACED WITH NEW NETWORK REMOTE ANNUNCIATOR NOTIFIER NCA-2 TO CONTROL BOTH FIRE ALARM CONTROL PANELS AS REQUIRED. PROVIDE NEW NETWORK CABLING IN EXISTING FIRE ALARM CONDUIT AND CONNECT AS REQUIRED FOR A COMPLETE AND FULLY OPERATIONAL SYSTEM.

4 PROVIDE 2' x 3' x 3' DEEP CONCRETE PULLBOX WITH BOLT DOWN TRAFFIC COVER ENGRAVED "POWER".

5 PROVIDE 2' x 3' x 3' DEEP CONCRETE PULLBOX WITH BOLT DOWN TRAFFIC COVER ENGRAVED "SIGNAL".

6 PROVIDE THE FOLLOWING SIGNAL SYSTEM CONDUIT WITH SPECIFIED SYSTEM CONDUCTORS:

2"C. (FIRE ALARM REFER TO FIRE ALARM RISER DIAGRAM ON SHEET E0.3 FOR CABLING)

tBP architecture planning interiors

LICENSED ARCHITECT KIMBERLY L. HERRERA NO. C34187 REN. 8.31.19 STATE OF CALIFORNIA

tBP/Architecture
4611 Teller Avenue
Newport Beach, CA 92660
ph: 949.673.0300 fx: 949.732.3895

architect

PROFESSIONAL ENGINEER ELECTRICAL No. 10372 Exp. 09-30-18 STATE OF CALIFORNIA

FBA Engineering
Consulting Electrical Engineers
150 Pasarino Avenue Suite A120
Costa Mesa, CA 92626
949.852.9566 ● 949.852.1657 (fax)
fbaeng.com
FBA Job Number: 212.214

consultant

FILE NO.:

IDENTIFICATION STAMP
DIVISION OF THE STATE ARCHITECT
DEPARTMENT OF GENERAL SERVICES

AC. _____ FLS _____ SS _____

DATE _____

DEPARTMENT OF GENERAL SERVICES
DSA Los Angeles Regional Office
700 N. Alameda Street, Suite 5-500
Los Angeles, California 90012
ph: (213)897-3995 fx: (213)897-3159/0726

DUNSMORE ELEMENTARY SCHOOL RELOCATABLE CLASSROOMS

GLENDALE UNIFIED SCHOOL DISTRICT
4717 DUNSMORE AVE.
LA CRESCENTA, CA 91214

owner

tBP project number : 20967.00

file name:

drawn by: checked by:

date: March 2017

Rev:	date:	description:

THIS DRAWING AND THE DESIGNS, DEPICTIONS, IDEAS AND OTHER INFORMATION CONTAINED HEREIN CONSTITUTE UNPUBLISHED WORK OF tBP/ARCHITECTURE AND SHALL REMAIN THE PROPERTY OF tBP/ARCHITECTURE IN PERPETUITY. NO PART THEREOF SHALL BE REPRODUCED, DISCLOSED, DISTRIBUTED, SOLD, PUBLISHED OR OTHERWISE USED IN ANY WAY WITHOUT THE ADVANCED EXPRESS WRITTEN CONSENT OF tBP/ARCHITECTURE.

drawing title:
OVERALL SITE ELECTRICAL PLAN

drawing no.:
ES.1

drawing of

FBA Engineering / Plot Date: 4/25/2017 11:03 AM / Plotted by: Brandon Nguyen / Drawing Location: \\212\214\ES-1_212214.dwg

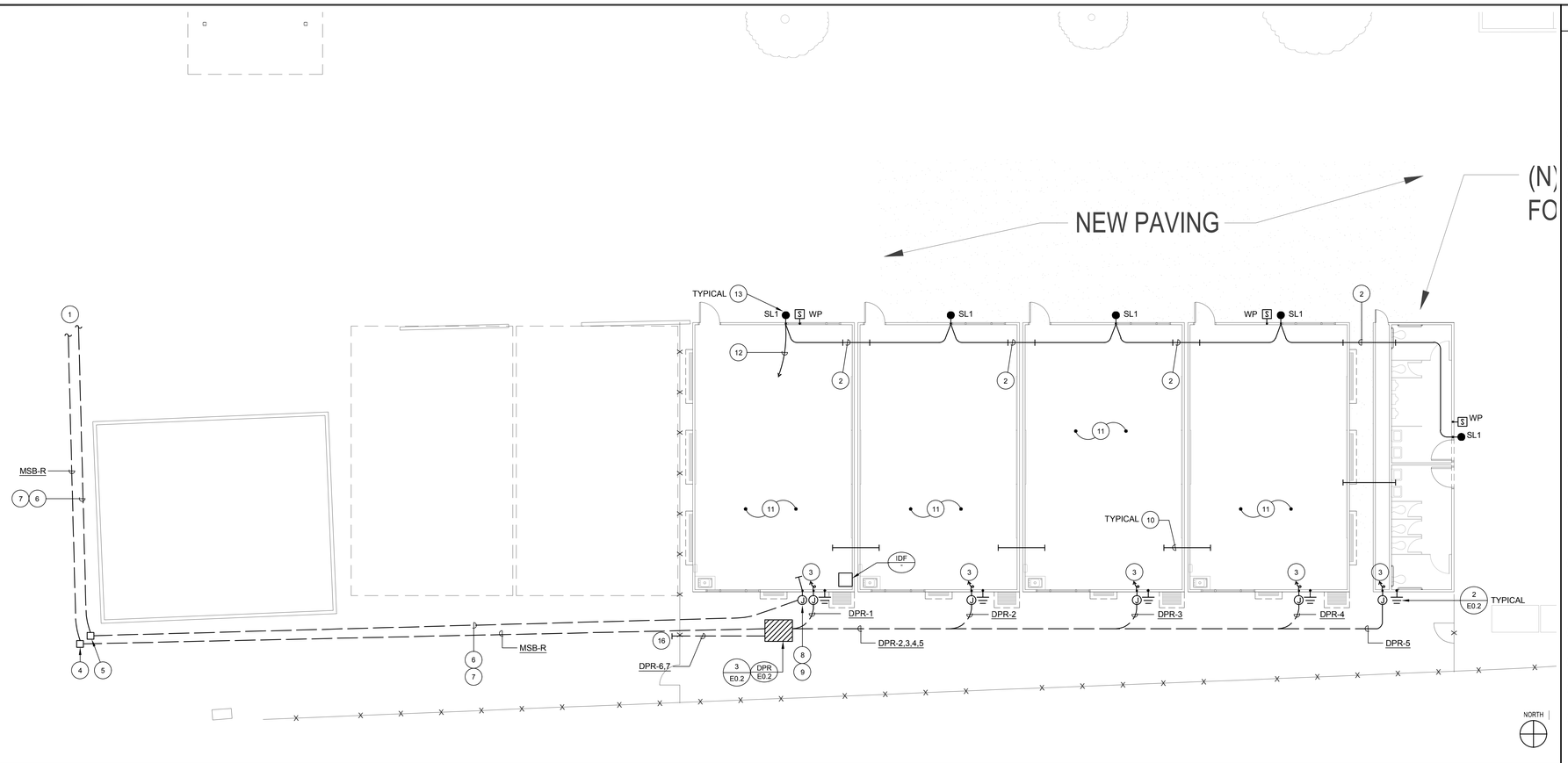

ENLARGED SITE ELECTRICAL PLAN 1/8" = 1'-0" | 1

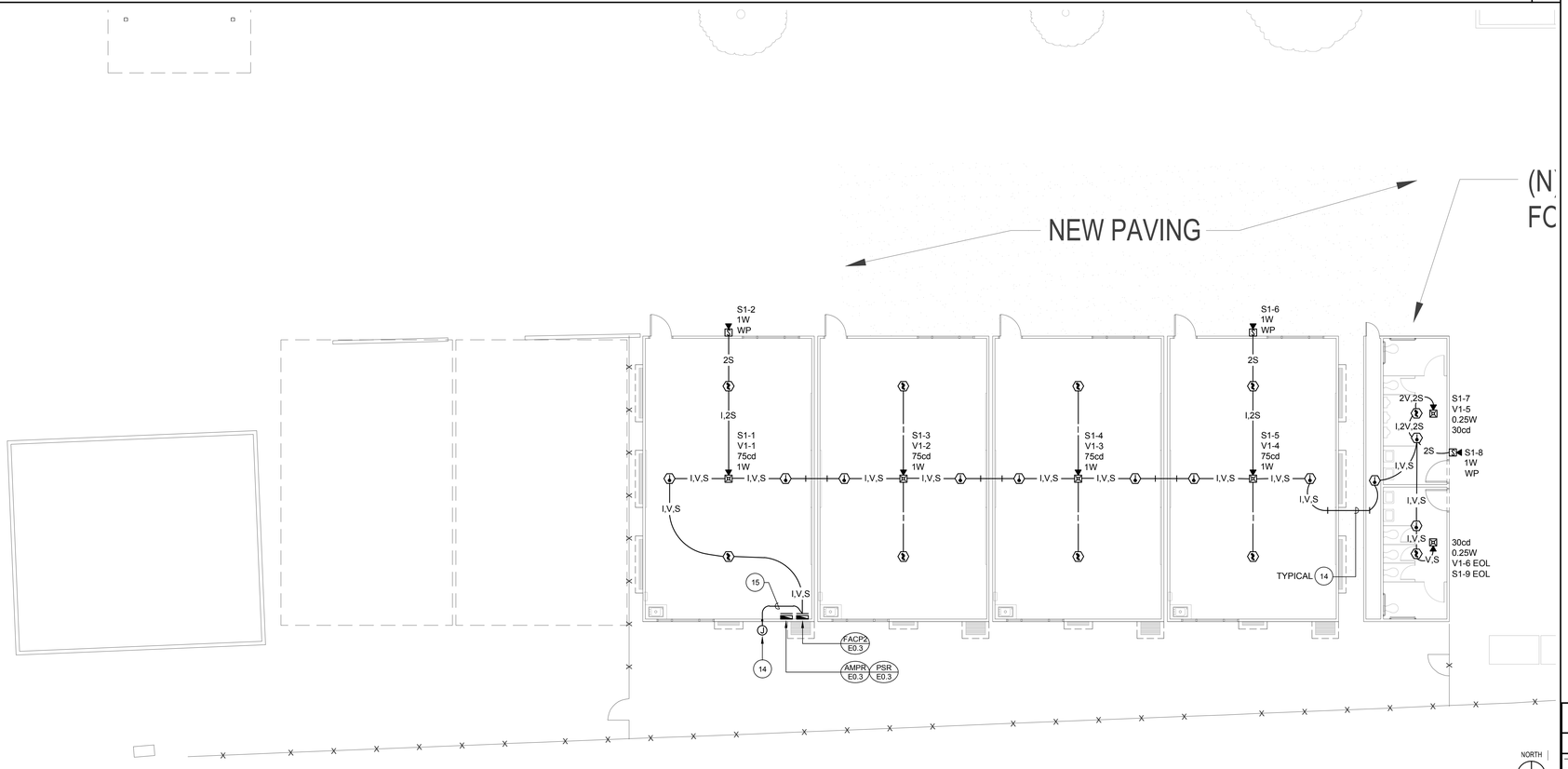

ENLARGED FIRE ALARM PLAN 1/8" = 1'-0" | 2

PLAN NOTES

1. REFER TO SHEET ES-1 FOR CONTINUATION.
2. PROVIDE 3/4" CONDUITS SLEEVES THROUGH WALL ABOVE THE CEILING FOR LIGHTING.
3. CONNECT TO PANELBOARD 100A, 2P MAIN CIRCUIT BREAKER IN RELOCATABLE BUILDING PER MANUFACTURE'S REQUIREMENTS.
4. PROVIDE 2' x 3' x 3' DEEP CONCRETE PULLBOX WITH BOLT DOWN TRAFFIC COVER ENGRAVED "POWER".
5. PROVIDE 2' x 3' x 3' DEEP CONCRETE PULLBOX WITH BOLT DOWN TRAFFIC COVER ENGRAVED "SIGNAL".
6. PROVIDE THE FOLLOWING SIGNAL SYSTEM CONDUIT WITH SPECIFIED SYSTEM CONDUCTORS:

   2"C. (FIRE ALARM REFER TO FIRE ALARM RISER DIAGRAM ON SHEET E0.3 FOR CABLING)
7. PROVIDE THE FOLLOWING SIGNAL SYSTEM CONDUIT WITH SPECIFIED SYSTEM CONDUCTORS:

   2"C. (DATA)
   2"C. (INTERCOM/ PUBLIC ADDRESS)
   2"C. (SPARE)
8. PROVIDE FOUR (4) 8'x8'x6'D. WEATHERPROOF JUNCTION BOXES FOR FIRE ALARM,INTERCOM/PA,DATA AND SPARE. PROVIDE ENGRAVED PLATE FOR EACH PULLBOX INDICATING SYSTEM.
9. ROUTE CONDUITS FROM THE PULLBOXES EXPOSED ON EXTERIOR WALL OF BUILDING TO AN ELEVATION ABOVE ACCESSIBLE CEILING SPACE INSIDE BUILDING WHERE CONDUITS CAN EXTEND AND STUB INTO THE CEILING SPACE. EXTEND RESPECTIVE SYSTEM CABLING THROUGH CEILING SPACE AND CONNECT TO EQUIPMENT AND DEVICES AS INDICATED. THE FIRE ALARM SYSTEM CONDUIT SHALL EXTEND FROM EXTERIOR PULLBOX INTO BUILDING AND ROUTE AS INDICATED.
10. PROVIDE THREE (3) 2" CONDUIT SLEEVES THROUGH WALL ABOVE THE CEILING FOR COMPUTER/DATA NETWORK, PA/INTERCOM, CABLING, AND ONE(1) 1" CONDUIT SLEEVE FOR FIRE ALARM.
11. CONNECT SIGNAL SYSTEM CONDUCTORS TO RESPECTIVE SIGNAL SYSTEM DEVICES, AND/OR IDF, TERMINAL CABINET AS REQUIRED FOR A COMPLETE AND FULLY OPERATIONAL SYSTEM. REFER TO TYPICAL MODULAR BUILDING ELECTRICAL PLAN ON SHEET E0-4 FOR ELECTRICAL REQUIREMENTS WITHIN BUILDING.
12. PROVIDE 3#12, 1#12 GRD. IN ½" C. TO PANELBOARD SUPPLIED WITH BUILDING. PROVIDE 20 AMP 1 POLE CIRCUIT BREAKER IN AVAILABLE SPACE AND CONNECT AS REQUIRED. UPDATE PANEL CIRCUIT DIRECTORY. CIRCUIT SHALL BE CONTROLLED BY PHOTOCELL ON / TIMECLOCK OFF. MOUNT LIGHTING CONTROL CABINET FLUSH IN WALL ABOVE ELECTRICAL PANEL.
13. WALL MOUNT LIGHT FIXTURE AT A HEIGHT CENTERED BETWEEN THE TOP OF WINDOW AND UNDERSIDE OF OVERHANG.
14. REFER TO DETAIL #1 FOR NOTES.
15. PROVIDE 1"C. FOR FIRE ALARM. REFER TO FIRE ALARM RISER DIAGRAM ON SHEET E0.3 FOR CABLING.
16. STUB AND CAP CONDUITS BELOW GRADE. PROVIDE FLUSH IN GRADE MARKER.

FIRE ALARM CONDUIT SCHEDULE

SYMBOL	CONDUCTORS	SIZE
—— I ——	2#16TP UNSHIELDED TWISTED-PAIR INITIATING CIRCUIT	3/4"C.
—— V ——	2#12 VISUAL CIRCUIT	3/4"C.
——2V——	4#12 VISUAL CIRCUIT	3/4"C.
—I,2V,2S—	MULTIPLE CONDUCTORS	1"C.
—I,V,S—	MULTIPLE CONDUCTORS	1"C.
—— S ——	2#18 SHIELDED TWISTED -PAIR	3/4"C.
——2S——	4#18 SHIELDED TWISTED -PAIR	3/4"C.

tBP architecture planning interiors

LICENSED ARCHITECT ★ VIRGINIA ★ NO. 034857 ★ STATE OF CALIFORNIA

tBP/Architecture
4611 Teller Avenue
Newport Beach, CA 92660
ph: 949.673.0300 fx: 949.732.3895

architect

PROFESSIONAL ENGINEER ★ 10372 ★ Exp. 09-30-18 ★ ELECTRICAL ★ STATE OF CALIFORNIA

FBA Engineering
Consulting Electrical Engineers
150 Pacifanno Avenue Suite A120
Costa Mesa, CA 92626
949.852.9566 • 949.852.1657 (fax)
fbaeng.com
FBA Job Number: 212.214

consultant

FILE NO.:

IDENTIFICATION STAMP
DIVISION OF THE STATE ARCHITECT
DEPARTMENT OF GENERAL SERVICES

AC.____ FLS ____ SS ____

DATE ____

DEPARTMENT OF GENERAL SERVICES
DSA Los Angeles Regional Office
700 N. Alameda Street, Suite 5-500
Los Angeles, California 90012
ph: (213)897-3995 fx: (213)897-3159/0726

DUNSMORE ELEMENTARY SCHOOL RELOCATABLE CLASSROOMS

GLENDALE UNIFIED SCHOOL DISTRICT
4717 DUNSMORE AVE.
LA CRESCENTA, CA 91214

owner

tBP project number : 20967.00
file name:
drawn by: checked by:
date: March 2017

Rev:	date:	description:

THIS DRAWING AND THE DESIGNS, DEPICTIONS, IDEAS AND OTHER INFORMATION CONTAINED HEREIN CONSTITUTE UNPUBLISHED WORK OF tBPARCHITECTURE AND SHALL REMAIN THE PROPERTY OF tBPARCHITECTURE IN PERPETUITY. NO PART THEREOF SHALL BE REPRODUCED, DISCLOSED, DISTRIBUTED, SOLD, PUBLISHED OR OTHERWISE USED IN ANY WAY WITHOUT THE ADVANCED EXPRESS WRITTEN CONSENT OF tBPARCHITECTURE.

drawing title:
ENLARGED SITE
ELECTRICAL PLAN

drawing no.:
ES.2
drawing of

FBA Engineering / Plot Date: 4/25/2017 11:03 AM / Plotted by: Brandon Nguyen / Drawing Location: I:\212\214\ES-2_212214.dwg

PART 1.00 GENERAL

1.01 RELATED DOCUMENTS

A. THE REQUIREMENTS OF THE GENERAL CONDITIONS, SUPPLEMENTARY GENERAL CONDITIONS AND PERTINENT PROVISIONS OF SECTIONS IN DIVISION ONE OF THESE SPECIFICATIONS APPLY TO THE WORK SPECIFIED IN THIS SECTION.

1.02 SCOPE

A. WORK INCLUDED: ALL LABOR, MATERIALS, APPLIANCE, TOOLS, EQUIPMENT, FACILITIES, TRANSPORTATION AND SERVICE NECESSARY FOR, AND INCIDENTAL TO, PERFORMING ALL OPERATIONS IN CONNECTION WITH FURNISHING, DELIVERY AND INSTALLATION OF THE WORK OF THIS SECTION, COMPLETE, AS SHOWN ON THE DRAWINGS AND/OR SPECIFIED HEREIN.

1.03 GENERAL SUMMARY OF ELECTRICAL WORK

A. THE SPECIFICATIONS AND DRAWINGS ARE INTENDED TO COVER A COMPLETE INSTALLATION OF SYSTEMS. THE OMISSION OF EXPRESSED REFERENCE TO ANY ITEM OF LABOR OR MATERIALS FOR THE PROPER EXECUTION OF THE WORK IN ACCORDANCE WITH PRESENT PRACTICE OF THE TRADE SHALL NOT RELIEVE THE CONTRACTOR FROM PROVIDING SUCH ADDITIONAL LABOR AND MATERIALS.

B. REFER TO THE DRAWINGS AND SHOP DRAWINGS OF OTHER TRADES FOR ADDITIONAL DETAILS WHICH AFFECT THE PROPER INSTALLATION OF THIS WORK.

C. THE ELECTRICAL DRAWINGS ARE DIAGRAMMATIC IN MANY RESPECTS. IT IS NOT WITHIN THE SCOPE OF THESE DRAWINGS TO SHOW ALL NECESSARY BENDS, OFFSETS, OR PULLBOXES REQUIRED. SIZES AND LOCATIONS OF EQUIPMENT AND WIRING MAY BE DISTORTED FOR CLARITY ON THE DRAWINGS. EXACT LOCATIONS OF ALL LIGHTING FIXTURES, OUTLETS, EXIT SIGNS, WIRING DEVICES, AND THE LIKE, SHALL BE SHOWN ON ARCHITECTURAL DRAWINGS, AS DIMENSIONED ON PLANS, OR AS APPROVED BY ARCHITECT.

D. BEFORE SUBMITTING A BID, THE CONTRACTOR SHALL FAMILIARIZE HIMSELF WITH ALL FEATURES OF THE SITE AND BUILDING DRAWINGS, WHICH MAY AFFECT THE EXECUTION OF THE WORK. NO EXTRA PAYMENT WILL BE ALLOWED FOR FAILURE TO OBTAIN THIS INFORMATION.

E. IF THERE ARE OMISSIONS OR CONFLICTS BETWEEN THE DRAWINGS AND SPECIFICATIONS, CLARIFY THESE POINTS WITH THE ARCHITECT BEFORE SUBMITTING A BID.

F. PROVIDE ALL LINE VOLTAGE ELECTRICAL WORK, MATERIALS AND CONTROL EQUIPMENT REQUIRED FOR PROPER OPERATION OF THE AIR CONDITIONING, HEATING, VENTILATING AND PLUMBING EQUIPMENT, AS SPECIFIED BY THE RESPECTIVE TRADE. THIS WORK MAY OR MAY NOT BE INCLUDED ON THE ELECTRICAL DRAWINGS.

1.04 LOCATIONS OF EQUIPMENT

A. THE DRAWINGS INDICATE DIAGRAMMATICALLY THE DESIRED LOCATIONS OF ARRANGEMENTS OF CONDUIT RUNS, OUTLETS, EQUIPMENT, ETC., AND ARE TO BE FOLLOWED AS CLOSELY AS POSSIBLE. PROPER JUDGMENT MUST BE EXERCISED IN EXECUTING THE WORK SO AS TO SECURE THE BEST POSSIBLE INSTALLATION IN THE AVAILABLE SPACE AND TO OVERCOME LOCAL DIFFICULTIES DUE TO SPACE LIMITATIONS OR INTERFERENCE OF STRUCTURAL CONDITIONS ENCOUNTERED.

B. IN THE EVENT CHANGES IN THE INDICATED LOCATIONS OR ARRANGEMENTS ARE NECESSARY, DUE TO DEVELOPED CONDITIONS IN THE BUILDING CONSTRUCTION OR REARRANGEMENT OF EQUIPMENT, SUCH CHANGES SHALL BE MADE WITHOUT COST PROVIDING THE CHANGE IS ORDERED BEFORE THE CONDUIT RUNS, ETC., AND WORK DIRECTLY CONNECTED TO SAME IS INSTALLED AND NO EXTRA MATERIALS ARE REQUIRED.

C. COORDINATE AND COOPERATE IN EVERY WAY WITH OTHER TRADES IN ORDER TO AVOID INTERFERENCE AND ASSURE A SATISFACTORY JOB.

1.05 QUALITY ASSURANCE, STANDARDS AND SYMBOLS

A. WORK AND MATERIALS IN FULL ACCORDANCE WITH THE LATEST RULES AND REGULATIONS OF THE CALIFORNIA ADMINISTRATIVE CODE TITLE 24, PART 3 "BASIC ELECTRICAL REGULATIONS, "TITLE 8 DIVISION OF INDUSTRIAL SAFETY", THE CITY OF SANTA MONICA, THE NATIONAL LIFE SAFETY CODE, PERTINENT N.F.P.A. PUBLICATIONS AND OTHER FEDERAL STATE OR OTHER CITY AGENCIES HAVING JURISDICTION.

B. KEEP A COPY OF ALL APPLICABLE CODES AVAILABLE AT THE JOB SITE AT ALL TIMES WHILE PERFORMING WORK UNDER THIS SECTION. NOTHING IN PLANS OR SPECIFICATIONS SHALL BE CONSTRUED TO PERMIT WORK NOT CONFORMING TO THE MOST STRINGENT OF CODES.

C. SHOULD ANY CHANGES BE NECESSARY IN THE DRAWINGS OR SPECIFICATIONS TO MAKE THE WORK COMPLY WITH THESE REQUIREMENTS, THE CONTRACTOR SHALL NOTIFY THE ARCHITECT AT ONCE IN WRITING AND CEASE WORK IN PARTS OF THE CONTRACT WHICH ARE AFFECTED.

1.06 CLEANING EQUIPMENT, MATERIALS, PREMISES

A. ALL PARTS OF THE EQUIPMENT SHALL BE THOROUGHLY CLEANED OF DIRT, RUST, CEMENT, PLASTER, ETC., AND ALL CRACKS AND CORNERS SCRAPED OUT CLEAN. SURFACES TO BE PAINTED SHALL BE CAREFULLY CLEANED OF GREASE AND OIL SPOTS AND LEFT SMOOTH, CLEAN AND IN PROPER CONDITION TO RECEIVE PAINT FINISH.

1.07 JOB CONDITIONS - PROTECTION

A. PROTECT ALL WORK, MATERIALS AND EQUIPMENT FROM DAMAGE FROM ANY CAUSE WHATEVER AND PROVIDE ADEQUATE AND PROPER STORAGE FACILITIES DURING THE PROGRESS OF THE WORK. PROVIDE FOR THE SAFETY AND GOOD CONDITION OF ALL THE WORK UNTIL FINAL ACCEPTANCE OF THE WORK BY THE OWNER AND REPLACE ALL DAMAGED OR DEFECTIVE WORK, MATERIALS AND EQUIPMENT BEFORE REQUESTING FINAL ACCEPTANCE.

1.08 CUTTING AND PATCHING

A. PERFORM CUTTING AND PATCHING ON THE CONSTRUCTION WORK WHICH MAY BE REQUIRED FOR THE PROPER INSTALLATION OF THE ELECTRICAL WORK. PATCHING SHALL BE OF THE SAME MATERIAL, WORKMANSHIP AND FINISH AS SPECIFIED AND ACCURATELY MATCH SURROUNDING WORK TO SATISFACTION OF THE ARCHITECT.

1.09 IDENTIFICATION

A. PANELBOARDS, TERMINAL CABINETS, CIRCUIT BREAKERS, DISCONNECT SWITCHES, STARTERS, RELAYS, TIME SWITCHES, CONTACTORS, PUSHBUTTON CONTROL STATIONS, AND OTHER APPARATUS USED FOR OPERATION OF CONTROLS OF FEEDERS, CIRCUITS, APPLIANCES, OR EQUIPMENT SHALL BE PROPERLY IDENTIFIED BY MEANS OF DESCRIPTIVE NAMEPLATES OR TAGS PERMANENTLY ATTACHED TO THE APPARATUS AND WIRING.

B. NAMEPLATES SHALL BE ENGRAVED LAMINATED PHENOLIC. SHOP DRAWINGS WITH DIMENSIONS AND FORMAT SHALL BE SUBMITTED TO THE ARCHITECT BEFORE INSTALLATION. ATTACHMENT TO EQUIPMENT SHALL BE WITH ESCUTCHEON PINS, RIVETS, SELF-TAPPING SCREWS OR MACHINE SCREWS. SELF-ADHERING OR ADHESIVE BACKED NAMEPLATES SHALL NOT BE USED.

C. PROVIDE BLACK-ON-WHITE LAMINATED PLASTIC NAMEPLATE ENGRAVED IN MINIMUM 1/4" HIGH LETTERS TO CORRESPOND WITH THE DESIGNATIONS ON THE DRAWINGS. PROVIDE OTHER ADDITIONAL INFORMATION ON NAMEPLATES WHERE INDICATED.

D. CARDHOLDERS AND CARDS SHALL BE PROVIDED FOR CIRCUIT IDENTIFICATION IN PANELBOARDS. CARDHOLDERS SHALL CONSIST OF A METAL FRAME RETAINING A CLEAR PLASTIC COVER PERMANENTLY ATTACHED TO THE INSIDE OF PANEL DOOR. LIST OF CIRCUITS SHALL BE TYPEWRITTEN ON CARD. CIRCUIT DESCRIPTION SHALL INCLUDE NAME OR NUMBER OF CIRCUIT, AREA, AND CONNECTED LOAD.

E. JUNCTION AND PULLBOXES SHALL HAVE COVERS STENCILED WITH BOX NUMBER WHEN SHOWN ON THE DRAWINGS, OR CIRCUIT NUMBERS ACCORDING TO PANEL SCHEDULE. DATA SHALL BE LETTERED IN AN INCONSPICUOUS MANNER WITH A COLOR CONTRASTING TO FINISH.

1.10 TESTING

A. THE CONTRACTOR SHALL OBTAIN AN INDEPENDENT NETA CERTIFIED TESTING LABORATORY THAT WILL PROVIDE ALL INSTRUMENTATION AND TESTS ON THE ELECTRICAL SYSTEM AND EQUIPMENT AS HEREINAFTER DESCRIBED AND FURTHER DIRECTED BY THE ARCHITECT. THE TEST SHALL BE PERFORMED AFTER THE COMPLETION OF ALL ELECTRICAL SYSTEMS. ALL TESTS SHALL BE RECORDED AND DOCUMENTED AND SUBMITTED TO THE ARCHITECT FOR REVIEW.

1. TEST FOR PHASE TO GROUND CONDITION:
   A. OPEN MAIN SERVICE DISCONNECT.
   B. ISOLATE THE SYSTEM NEUTRAL FROM GROUND BY REMOVING THE NEUTRAL DISCONNECT LINK LOCATED IN THE SERVICE SWITCHBOARD.
   C. CLOSE ALL SUBMAIN DISCONNECTS.
   D. CLOSE ALL BRANCH FEEDER CIRCUIT BREAKERS.
   E. MEASURE THE RESISTANCE OF EACH PHASE TO GROUND. A PROPERLY CALIBRATED "MEGGER" TYPE TEST INSTRUMENT TO BE USED. THE TEST VOLTAGE SHALL BE 500 VOLTS.
   F. RECORD ALL READINGS AFTER ONE MINUTE DURATION AND DOCUMENT INTO A COMPLETE REPORT.
2. ISOLATING GROUNDS: IN THE EVENT THAT LOW RESISTANCE GROUNDS ARE FOUND IN THE SYSTEM, THEY SHALL BE ISOLATED AND LOCATED BY TESTING EACH CIRCUIT INDIVIDUALLY AS OUTLINED ABOVE. MAKE PROPER CORRECTIONS TO RESTORE THE RESISTANCE VALUES TO AN ACCEPTABLE VALUE.

C. METHOD OF OBTAINING GROUND RESISTANCE SHALL BE IN ACCORDANCE WITH THE LATEST EDITION OF THE JAMES G. BIDDLE (PLYMOUTH MEETING, PENNSYLVANIA) MANUAL PUBLISHED ON THIS SUBJECT.

1. PERFORM "FALL-OF-POTENTIAL" TESTS ON EACH GROUNDING ELECTRODE OF SYSTEM PER IEEE STANDARD NO. 81, SECTION 8.2.1.5. WHEN SUITABLE LOCATIONS FOR TEST RODS ARE NOT AVAILABLE, A LOW RESISTANCE DEAD EARTH OR REFERENCE GROUND WILL BE UTILIZED.
2. PERFORM THE TWO-POINT METHOD TEST PER IEEE STANDARD NO. 81, SECTION 8.2.1.1, TO DETERMINE THE GROUND RESISTANCE AT EACH GROUND BUS IN DISTRIBUTION BOARDS AND DISTRIBUTION PANELS AND TRANSFORMER NEUTRALS.

D. ALL INSTRUMENTATION AND PERSONNEL REQUIRED FOR TESTING SHALL BE FURNISHED BY THE CONTRACTOR.

E. THE TESTING, CALIBRATING AND SETTING OF ALL GROUND AND GROUND FAULT EQUIPMENT CIRCUIT BREAKERS, DEVICE PROTECTION RELAYS, AND METERS ADJUSTABLE SETTINGS SHALL BE BY AN INDEPENDENT TESTING LABORATORY. SET AS RECOMMENDED BY THE RESPECTIVE MANUFACTURER AND COORDINATION STUDY SO AS TO BE COORDINATED WITH OTHER PROTECTION DEVICES WITHIN THE ELECTRICAL DESIGN. FOUR (4) BOUND AND TABULATED COPIES OF THE TEST AND SETTINGS SHALL BE SENT TO THE ARCHITECT.

F. AMPERE AND VOLTAGE MEASUREMENTS:

1. TAKE AND RECORD AMPERE AND LINE VOLTAGE MEASUREMENTS UNDER FULL LOAD ON ALL PANEL FEEDERS, SWITCHBOARD AND SWITCHGEAR FEEDERS, MOTOR CONTROL CENTERS AND MOTOR CIRCUITS PROVIDED IN THE CONTRACT. RECORD MEASUREMENTS AT THE EQUIPMENT TESTED AND SUBMIT TO THE ARCHITECT FOR REVIEW.
2. AMPERE VOLTAGE READINGS SHALL BE:
   A. PHASE A-B, A-C AND B-C.
   B. PHASE A-NEUTRAL, B-NEUTRAL AND C-NEUTRAL.
3. THE AMPERE AND VOLTAGE READINGS SHALL BE NOT LESS THAN 20 MINUTES DURATION FOR EACH TEST. RECORD AND SUBMIT THE MEASURED MINIMUM, MAXIMUM AND 20 MINUTE AVERAGE FOR EACH AMPERE AND VOLTAGE VALUE AND TEST LOCATION. VOLTAGE AND AMPERE MEASUREMENTS SHALL OCCUR AT THE CONNECTED LOAD END OF EACH RESPECTIVE FEEDER, NOT AT THE SOURCE OF SUPPLY END OF EACH FEEDER.
4. TEST EQUIPMENT SHALL BE ACCURATE WITHIN PLUS OR MINUS 1-PERCENT.
5. BRANCH CIRCUIT DEVICES 40 AMPERE OR LESS AND MOTOR BOARDS 10 HORSEPOWER OR SMALLER ARE EXCLUDED FROM AMPERE AND VOLTAGE TESTING REQUIREMENT.

G. IF, IN THE OPINION OF THE ARCHITECT, THE VOLTAGES AND REGULATIONS ARE NOT MET WITHIN ACCEPTABLE LIMITS, MAKE ARRANGEMENTS WITH THE SERVING UTILITY FOR PROPER ELECTRICAL SERVICE AND THEN VERIFY THAT SUCH HAS BEEN PROVIDED.

PART 2 - PRODUCTS

2.01 CONDUIT

A. RIGID METAL CONDUIT: STEEL, HOT-DIP GALVANIZED, SHERARDIZED OR ZINC COATED.

B. ELECTRICAL METALLIC TUBING: STEEL, GALVANIZED OR SHERARDIZED. COUPLINGS AND CONNECTORS, SEAMLESS STEEL CONSTRUCTION AND OF THE SET SCREW OR WATERTIGHT COMPRESSION TYPE EQUAL TO THOMAS & BETTS CO. #5123 OR #5031 SERIES, COMPLETE WITH INSULATED THROATS.

C. FLEXIBLE CONDUIT: STEEL, GALVANIZED. CONNECTOR SHALL BE EQUAL TO THOMAS & BETTS CO. #3312 AND/OR #3332 SERIES COMPLETE WITH INSULATED THROAT.

D. LIQUID-TIGHT FLEXIBLE CONDUIT: SEALTITE TYPE U.A. WITH APPLETON SERIES "ST" CONNECTORS.

E. POLYVINYL CHLORIDE (PVC)

A. PVC-SCHEDULE 40 HEAVY WALL CONSTRUCTION.

B. PVC-SCHEDULE 80 EXTRA HEAVY WALL CONSTRUCTION

2.02 WIRE AND CABLE

A. COPPER CONDUCTORS: #12 AWG MINIMUM UNLESS SPECIFICALLY NOTED OTHERWISE ON THE DRAWINGS. CONDUCTORS #10 AWG AND SMALLER SHALL BE SOLID AND #8 AWG AND LARGER SHALL BE STRANDED. TYPE OF WIRE AS NOTED ON DRAWINGS OR AS FOLLOWS:

1. TYPE THWN/THHN INSULATION USED FOR ALL CONDUCTORS UNLESS OTHERWISE NOTED.
2. TYPE THHN INSULATION USED FOR CIRCUIT CONDUCTORS INSTALLED IN FLUORESCENT LIGHTING FIXTURE RACEWAYS, FOR CONDUCTORS CONNECTED TO THE SECONDARY OF FLUORESCENT FIXTURE BALLAST OR OTHER HOT LOCATIONS.
3. TYPE XHHW OR THWN INSULATION SHALL BE USED WHERE CONDUCTORS ARE INSTALLED IN CONDUIT EXPOSED TO THE WEATHER.
4. THE FOLLOWING COLOR CODE FOR 120/208 VOLT BRANCH CIRCUITS: NEUTRAL - WHITE (TAPE FEEDER NEUTRALS WITH WHITE TAPE NEAR CONNECTIONS); GROUND - GREEN; ISOLATED GROUND - GREEN WITH YELLOW STRIPE; PHASE A - BLACK; PHASE B - RED; PHASE C - BLUE.
5. WHEN INDIVIDUAL NEUTRAL CONDUCTORS ARE REQUIRED FOR EACH BRANCH CIRCUIT, THE COLOR CODE FOR THE NEUTRAL CONDUCTORS SHALL BE AS FOLLOWS: PHASE A - WHITE WITH BLACK STRIPE; PHASE B - WHITE WITH RED STRIPE; PHASE C - WHITE WITH BLUE STRIPE. ALL COMMON NEUTRAL CONDUCTORS, WHEN REQUIRED, SHALL BE WHITE WITHOUT ANY STRIPES.
6. COLOR CODING FOR MECHANICAL AND PLUMBING CONTROL WIRING SHALL BE AN AGREED UPON COLOR CODE BETWEEN THE MECHANICAL/PLUMBING CONTRACTOR AND THE ELECTRICAL CONTRACTOR.

2.03 OUTLET AND JUNCTION BOXES

A. OUTLET JUNCTION BOXES USED IN CONCEALED WORK, EXCEPT MASONRY, SHALL BE GALVANIZED OR SHERARDIZED, ONE-PIECE, PRESSED STEEL, KNOCK-OUT TYPE SIZED IN ACCORDANCE WITH THE CODE FOR THE NUMBER OF CONDUCTORS OR THE NUMBER AND SIZE OF CONDUIT CENTERING BOX, BUT SHALL NOT BE LESS THAN 4" SQUARE AND 1-1/2" DEEP. PLASTER RINGS SHALL BE PROVIDED FOR ALL FLUSH MOUNTED BOXES.

B. OUTLET AND JUNCTION BOXES USED OUTSIDE OF BUILDING, ON ROOF OR IN LANDSCAPED AREA SHALL BE CASE ALUMINUM AS MANUFACTURED BY CROUSE-HINDS, TYPE "FS" OR EQUAL WITH CONDUIT HUBS AS REQUIRED.

C. SURFACE MOUNTED OUTLET BOXES SHALL BE CAST TYPE WITH THREADED HUBS.

D. ALL BOXES FOR DATA, TELEPHONE, FIRE ALARM, CLOCK, TELEVISION, PUBLIC ADDRESS, SPEAKER AND INTRUSION DETECTION OUTLETS SHALL BE 4-11/16" SQUARE BY 2-1/2" DEEP MINIMUM, WITH EXTENSION RING AS REQUIRED TO ACCOMMODATE THE OUTLET ASSEMBLY TO BE INSTALLED.

2.04 CIRCUIT BREAKER

A. WHERE 2 OR 3 POLE BREAKERS OCCUR IN THE PANELS, THEY SHALL BE COMMON TRIP UNITS. SINGLE POLE BREAKERS WITH TIE-BAR BETWEEN HANDLES WILL NOT BE ACCEPTED.

B. CIRCUIT BREAKERS SHALL BE ARRANGED IN THE PANELS SO THAT THE BREAKERS ON THE PROPER TRIP SETTINGS AND NUMBERS CORRESPOND TO THE NUMBERING IN THE PANEL SCHEDULES ON THE DRAWINGS. CIRCUIT NUMBERS OF BREAKERS SHALL BE BLACK-ON-WHITE MICARTA TABS OR OTHER PREVIOUSLY APPROVED METHOD. CIRCUIT NUMBER TABS, WHICH CAN READILY BE CHANGED FROM FRONT OF PANEL, WILL NOT BE ACCEPTED. CIRCUITS NUMBER TABS, WHICH SHALL NOT BE ATTACHED TO, OR ARE A PART OF THE BREAKER.

C. CIRCUIT BREAKERS SHALL BE BOLT ON TYPE.

2.05 COMMUNICATIONS SYSTEMS

A. WORK INCLUDED: ALL LABOR, MATERIALS, APPLIANCES TOOLS, EQUIPMENT, FACILITIES TRANSPORTATION AND SERVICES NECESSARY FOR AND INCIDENTAL TO PERFORMING ALL OPERATIONS IN CONNECTION WITH FURNISHING, DELIVERY AND INSTALLATION OF THE WORK OF THIS SECTION, COMPLETE AS SHOWN ON THE DRAWINGS AND/OR SPECIFIED HEREIN. WORK INCLUDES, BUT IS NOT NECESSARILY LIMITED TO THE FOLLOWING:

1. EXAMINE ALL OTHER SECTIONS FOR WORK RELATED TO THOSE OTHER SECTIONS AND REQUIRED TO BE INCLUDED AS WORK UNDER THIS SECTION.
2. GENERAL PROVISIONS AND REQUIREMENTS FOR ELECTRICAL WORK.

B. SUBMIT PRODUCT DATA SHEETS AND DESCRIPTIVE LITERATURE FOR ALL COMPONENT PARTS.

C. ALL EQUIPMENT SHALL CONFORM TO ALL LOCAL APPLICABLE CODES AND ORDINANCES, AND SHALL BE LISTED BY UNDERWRITERS LABORATORIES.

D. ALL NEW ELECTRONIC EQUIPMENT SHALL MATCH EXISTING EQUIPMENT AT EACH SITE.

E. THE SUPPLIER OF THE EQUIPMENT SHALL BE THE FACTORY AUTHORIZED DISTRIBUTOR AND SERVICE FACILITY FOR THE BRAND OF EQUIPMENT PROVIDED.

F. TO QUALIFY AS AN ACCEPTABLE BIDDER, WHETHER THE BID IS SUBMITTED TO THE DISTRICT, HIS AGENT, A GENERAL CONTRACTOR OR A SUB-CONTRACTOR, THE SYSTEM BIDDER OR CONTRACTOR SHALL BE QUALIFIED SOUND CONTRACTOR AND SHALL HOLD A VALID C61 LICENSE ISSUED BY THE CONTRACTORS STATE LICENSE BOARD OF CALIFORNIA. THE SYSTEM BIDDER OR CONTRACTOR SHALL HEREINAFTER BE REFERRED TO AS THE CONTRACTOR. THE CONTRACTOR SHALL HOLD ALL OTHER LICENSES REQUIRED BY THE LEGALLY CONSTITUTED AUTHORITIES HAVING JURISDICTION OVER THE WORK. THE CONTRACTOR SHALL BE THE FACTORY AUTHORIZED DISTRIBUTOR FOR THE BRAND OF EQUIPMENT OFFERED AND SHALL HAVE BEEN ENGAGED IN THE BUSINESS OF SUPPLYING AND INSTALLING THE SPECIFIED TYPE OF SYSTEM FOR AT LEAST FIVE YEARS. THE CONTRACTOR SHALL MAINTAIN A FULLY EQUIPPED SERVICE ORGANIZATION CAPABLE OF FURNISHING ADEQUATE REPAIR SERVICE TO THE EQUIPMENT. THE CONTRACTOR SHALL BE FINANCIALLY ABLE TO PROVIDE A PERFORMANCE BOND COVERING THE WORK AND THE GUARANTEE DESCRIBED. THE CONTRACTOR SHALL PROVIDE THAT BOND IF REQUESTED.

G. MATERIALS

1. COMPLY WITH PERTINENT PROVISIONS OF SECTION 2.01, 2.02, 2.03, 3.02, 3.03, 3.04, 3.05.

H. EXISTING CENTRAL EQUIPMENT

1. VISIT THE SITE AND BECOME FAMILIAR WITH THE EXISTING DATA NETWORK, TELEVISION, PUBLIC ADDRESS, MASTER CLOCK, INTRUSION DETECTION AND TELEPHONE EQUIPMENT PRIOR TO SUBMITTING A BID. INCLUDE WITHIN THIS CONTRACT ALL COSTS TO MODIFY AND/OR ADD TO THE EXISTING PBX AND PUBLIC ADDRESS/PAGING/CLOCK CENTRAL EQUIPMENT WITH NEW TELEPHONE/SPEAKER MODULES, POWER SUPPLIES AND WIRING AS REQUIRED TO EXPAND AND FULLY SERVE THE NEW CONSTRUCTION.
2. PROVIDE AUXILIARY COMPONENTS AND/OR ACCESSORIES WHERE REQUIRED TO INTERFACE NEW AND EXISTING EQUIPMENT.

I. COMPUTER/DATA NETWORK

1. PROVIDE COMPUTER CABLING SYSTEM FOR THE NEW BUILDINGS. SYSTEM SHALL INCLUDE FIBER OPTIC CABLES, COPPER CABLES, INTERMEDIATE DISTRIBUTION FRAMES, RACKS, CONNECTORS, ACCESSORIES, TESTING AND EXTENDED MANUFACTURER'S 15 YEAR WARRANTY AS DESCRIBED HEREIN AND AS FOLLOWS:
   A. PROVIDE AN INTERMEDIATE DISTRIBUTION FRAME (IDF) WHERE INDICATED ON PLANS.
   B. UTILIZING THE CONDUIT SYSTEM INDICATED INDICATED ON THE PLANS, PROVIDE A MINIMUM 12 STRAND FIBER OPTIC CABLE FROM THE MDF IN THE ADMINISTRATION BUILDING TO EACH OF THE IDF'S WHERE INDICATED ON PLANS.
   C. PROVIDE A COPPER WIRE CONNECTOR AT EACH COMPUTER OUTLET. QUANTITY AND LOCATION SHOWN ON PLANS. UTILIZING CONDUITS AND RACEWAYS INDICATED ON PLANS, PROVIDE COPPER 4-PAIR CATEGORY 6 UNSHIELDED TWISTED PAIR CABLE FROM EACH CONNECTOR TO THE DESIGNATED IDF.
   D. PROVIDE FIBER OPTIC DISTRIBUTION ENCLOSURES AT MDF AND AT EACH IDF. PROVIDE COPPER WIRE PATCH PANELS AND ACCESSORIES AT EACH NEW IDF LOCATION WHERE REQUIRED.
   E. PROVIDE A TELEPHONE CABLE FROM THE MAIN TELEPHONE BACKBOARD IN THE MAIN LAN ROOM TO THE FIRE ALARM DIGITAL COMMUNICATOR INDICATED ON THE PLANS.

J. TELEVISION SIGNAL DISTRIBUTION

1. THE CONTRACTOR SHALL FURNISH ALL MATERIALS, EQUIPMENT, LABOR AND SERVICES REQUIRED FOR THE EXPANSION OF THE EXISTING TV SIGNAL DISTRIBUTION SYSTEM.
2. EQUIPMENT SPECIFICATIONS:
   A. IN ORDER TO MATCH EXISTING, ESTABLISH QUALITY AND STANDARDS OF PERFORMANCE OF EQUIPMENT REQUIRED BY THE OWNER, THE SPECIFIED EQUIPMENT FOR THE DISTRIBUTION SYSTEM IS THAT OF BLONDER TONGUE.
   B. AMPLIFIERS IF REQUIRED SHALL BE BIDA 450-50 WITH FILTERS AS REQUIRED.
   C. ROOM TAPS SHALL BE V-2488 ISOLATION AS REQUIRED.
   D. TRUNK CABLE SHALL BE WEST PENN 821 FOR RUNS OF 500' OR LESS, JA500 FOR OVER 500'. DROP CABLE SHALL BE WEST PENN 842.

K. CABLING

1. CABLE RUN IN CONDUITS BELOW GRADE SHALL BE TEFLON-COATED OR OTHERWISE APPROVED BY THE MANUFACTURER FOR THE PURPOSE. REPULL ANY EXISTING SITE RUNS AND ADD CONDUCTORS NECESSARY TO ADD NEW DEVICES.
2. CABLE SERVING NEW HANDSETS OUTLETS SHALL BE FOUR TWISTED PAIRS OF #24 AWG SOLID COPPER CONDUCTORS WITH OVERALL SHIELD AND JACKET. CABLE SHALL BE U.L. CATEGORY 5 OR EQUAL TO MATCH EXISTING CABLING ON SITE.

L. TELEPHONES

1. ALL TELEPHONE INSTRUMENTS SHALL BE STANDARD DUAL-TONE MULTI FREQUENCY (DTMF) DIALING INSTRUMENT, COMPLETE WITH SOLID-STATE PRETUNED OSCILLATORS AND NETWORK, IDENTICAL TO THOSE SUPPLIED BY PUBLIC TELEPHONE COMPANIES WITHOUT MODIFICATIONS. ALL THE TELEPHONES SHALL BE BY THE SAME MANUFACTURER AS THOSE CURRENTLY USED ON SITE.
2. PROVIDE A MODULAR, U.L. CATEGORY 3 RJ-TYPE CONNECTOR TO EACH TELEPHONE OUTLET IN THE SYSTEM.
3. WHERE PLANS INDICATE A WALL-MOUNTED TELEPHONE OUTLET, PROVIDE NOMINAL 6-INCH LONG PORTABLE CATEGORY 3 CORD AND RJ-TYPE CONNECTOR AT EACH END, PLUS A WALL-MOUNTED SINGLE-LINE TELEPHONE INSTRUMENT BOLTED DIRECTLY OVER THE OUTLET. SINGLE LINE WALL-MOUNTED TELEPHONES SHALL MATCH EXISTING EQUIPMENT ON SITE.

M. ACCESSORIES

1. INTERIOR SPEAKERS SHALL BE 8-INCH DIAMETER PAPER CONE TYPE WITH T25 25V LINE MATCHING TRANSFORMER. FREQUENCY RANGE TO BE 30 TO 15,000 HZ. COMPLETE WITH MATCHING BACK-BOX AND GRILL FOR FLUSH MOUNTING INTO CEILING.
2. EXTERIOR SPEAKER ASSEMBLY SHALL CONSIST OF AN ATLAS #APF-15 SERIES LOUDSPEAKER WITH T-11 TRANSFORMER, COMPLETE WITH MATCHING SURFACE MOUNTED ENCLOSURE WITH VANDALPROOF GRILL.

2.08 FIRE ALARM SYSTEM

A. ALL EQUIPMENT SHALL BE EXCLUSIVELY AS PRODUCED BY THE MANUFACTURERS NAMES HEREIN AND ON THE DRAWINGS IN ORDER TO MATCH EXISTING EQUIPMENT ON THE SITE OR OPERATIONAL AND MAINTENANCE SYSTEMS WITHIN THE DISTRICT. NO SUBSTITUTIONS OR EQUALS WILL BE APPROVED.

B. TO QUALIFY AS AN ACCEPTABLE BIDDER, WHETHER THE BID IS SUBMITTED TO THE DISTRICT, HIS AGENT, A GENERAL CONTRACTOR OR A SUB-CONTRACTOR, THE SYSTEM BIDDER OR CONTRACTOR SHALL BE QUALIFIED FIRE ALARM CONTRACTOR AND SHALL HOLD A VALID C10 LICENSE ISSUED BY THE CONTRACTORS STATE LICENSE BOARD OF CALIFORNIA. THE SYSTEM BIDDER OR CONTRACTOR SHALL HEREINAFTER BE REFERRED TO AS THE CONTRACTOR. THE CONTRACTOR SHALL HOLD ALL OTHER LICENSES REQUIRED BY THE LEGALLY CONSTITUTED AUTHORITIES HAVING JURISDICTION OVER THE WORK. THE CONTRACTOR SHALL BE THE FACTORY AUTHORIZED DISTRIBUTOR FOR THE BRANCH OF EQUIPMENT OFFERED AND SHALL HAVE BEEN ENGAGED IN THE BUSINESS OF SUPPLYING AND INSTALLING THE SPECIFIED TYPE OF SYSTEM FOR AT LEAST FIVE YEARS. THE CONTRACTOR SHALL MAINTAIN A FULLY EQUIPPED SERVICE ORGANIZATION CAPABLE OF FURNISHING ADEQUATE REPAIR SERVICE TO THE EQUIPMENT. THE CONTRACTOR SHALL BE FINANCIALLY ABLE TO PROVIDE A PERFORMANCE BOND COVERING THE WORK AND THE GUARANTEE DESCRIBED. THE CONTRACTOR SHALL PROVIDE THAT BOND IF REQUESTED.

C. INSTALLATION CERTIFICATION

1. WORK AND MATERIAL FOR CABLES, CABLE TERMINATIONS AND RELATED COMPONENTS SHALL BE PERFORMED BY CERTIFIED INSTALLERS. THE INSTALLER SHALL BE CERTIFIED BY THE RESPECTIVE PRODUCT MANUFACTURERS.
2. THE MANUFACTURERS OF THE INDICATED WORK AND MATERIAL, SHALL PROVIDE A INSTALLER EDUCATION/TRAINING AND CERTIFICATION PROGRAM FOR THE SUPPLIED PRODUCTS.
3. THE INSTALLERS PERFORMING THE CONTRACT WORK FOR THE INDICATED PRODUCTS, SHALL HAVE ATTENDED AND SUCCESSFULLY COMPLETED EACH OF THE RESPECTIVE MANUFACTURER'S INSTALLATION TRAINING EDUCATION PROGRAMS FOR THE SPECIFIED PRODUCTS.
4. SUBMIT SIX (6) COPIES OF THE MANUFACTURER'S CERTIFICATIONS FOR EACH INSTALLER PERFORMING THE WORK. THE SUBMITTAL SHALL BE APPROVED BY PRIOR TO INITIATING ANY RELATED CONTRACT WORK.

D. CONTRACT MATERIAL INSTALLED AND WORK PERFORMED BY INSTALLERS NOT COMPLYING WITH THESE REQUIREMENTS SHALL BE REMOVED. REMOVAL OF WORK AND MATERIAL NOT IN COMPLIANCE WITH THESE REQUIREMENTS SHALL DONE AT THE CONTRACTOR'S EXPENSE, WITHOUT ANY ADDITIONAL COST TO THE CONTRACT AND WITHOUT ANY ADDITIONAL CONTRACT COMPLETION DUE DATE EXTENSIONS. NEW MATERIAL AND WORK REQUIRED TO REPLACE THE NON-COMPILING REMOVED WORK AND MATERIAL SHALL BE PROVIDED AT THE CONTRACTOR'S EXPENSE, WITHOUT ANY ADDITIONAL COST TO THE CONTRACT AND WITHOUT ANY ADDITIONAL CONTRACT COMPLETION DUE DATE EXTENSIONS.

E. ALARM CONDITIONS

1. ACTUATION OF ANY MANUAL OR AUTOMATIC ALARM INITIATING DEVICE, CONNECTED TO THE SYSTEM SHALL CAUSE THE FOLLOWING AUTOMATIC FUNCTIONS.
   A. ALL ALARM SIGNALING UNITS SHALL ACTIVATE CONTINUOUSLY. AUDIBLE ALARMS SHALL SOUND THE CALIFORNIA STATE CODED SIGNAL.
   B. THE RESPECTIVE ZONE ALARM LAMP OR ANNUNCIATOR ALPHA NUMERIC READOUT ON THE CENTRAL CONTROL PANEL, AND REMOTE ANNUNCIATOR PANEL, SHALL BE ACTIVATED.
2. EVACUATION SIGNAL DURATION SHALL BE CAPABLE OF CONTINUOUS SOUNDING OR ADJUSTABLE FROM THREE TO TEN MINUTES.
3. PERFORM ANY ADDITIONAL FUNCTIONS AS SPECIFIED HEREIN OR SHOWN ON THE DRAWINGS.

F. TROUBLE CONDITION

1. A SINGLE OPEN OR SINGLE TROUBLE CONDITION IN A MANUAL OR AUTOMATIC FIRE INITIATING WIRING CIRCUIT SHALL LIGHT THE RESPECTIVE ZONE TROUBLE LAMP OR ANNUNCIATOR READOUT ON THE FIRE ALARM CONTROL PANEL AND SOUND A TROUBLE SIGNAL AT THE CONTROL PANEL.
2. A SINGLE OPEN OR SINGLE TROUBLE CONDITION IN THE EVACUATION ALARM SIGNALING WIRING CIRCUIT SHALL LIGHT THE TROUBLE LAMP OR ANNUNCIATOR READOUT IN THE CONTROL PANEL AND SOUND A TROUBLE SIGNAL AT THE CONTROL PANEL. A SIGNALING CIRCUIT "ACTIVATED" LAMP SHALL BE PROVIDED FOR EACH SIGNALING LOOP FOR SYSTEM TESTING AND TROUBLE SIGNALING IN THE CONTROL PANEL.
3. 120 VOLT AC NORMAL POWER SHALL BE MONITORED WITH INDICATION BY A "POWER ON" LAMP. UPON NORMAL POWER OUTAGE, THE SYSTEM SHALL LIGHT A POWER TROUBLE CONDITION LAMP OR ANNUNCIATOR READOUT, AND INDICATE A TROUBLE CONDITION.
4. THE CONTROL PANEL SHALL MONITOR THE STANDBY BATTERIES AND, UPON A LOW BATTERY CONDITION, ACTIVATE THE LOW BATTERY LAMP OR ANNUNCIATOR READOUT AND INDICATE A TROUBLE CONDITION.
5. SYSTEM GROUND DETECTION SHALL BE PROVIDED FOR THE ENTIRE SYSTEM. UPON GROUND DETECTION, ACTIVATE THE GROUND DETECTION LAMP OR ANNUNCIATOR READOUT AND A TROUBLE SIGNAL SHALL SOUND.

PART 3 - EXECUTION

3.01 GROUNDING

A. GROUNDING SHALL BE EXECUTED IN ACCORDANCE WITH ALL APPLICABLE CODES AND REGULATIONS AND LOCAL AUTHORITIES HAVING JURISDICTION.

B. GROUND CONDUCTORS FOR BRANCH CIRCUIT WIRING SHALL BE ATTACHED AT EACH OUTLET TO THE BACK OF THE BOX USING DRILLED AND TAPPED HOLES AND WASHER HEAD SCREWS, 6-32 OR LARGER.

C. EACH PANELBOARD, SWITCHBOARD, PULLBOX OR ANY OTHER ENCLOSURE IN WHICH SEVERAL GROUND WIRES ARE TERMINATED SHALL BE EQUIPPED WITH A GROUND BUS SECURED TO THE INTERIOR OF THE ENCLOSURE. THE BUS SHALL HAVE A SEPARATE LUG FOR EACH GROUND CONDUCTOR. NO MORE THAN ONE CONDUCTOR SHALL BE INSTALLED PER LUG.

3.02 CONDUIT

A. PROVIDE TRENCHING, CONCRETE ENCASEMENT OF CONDUITS, BACKFILLING, AND COMPACTION FOR THE UNDERGROUND ELECTRICAL WORK, IN ACCORDANCE WITH APPLICABLE SECTIONS OF THIS SPECIFICATION.

B. THE SIZES OF THE CONDUITS FOR THE VARIOUS CIRCUITS AS INDICATED ON THE DRAWINGS AND AS REQUIRED BY CODE FOR THE SIZE AND NUMBER OF CONDUCTORS TO BE PULLED THEREIN.

C. ELECTRICAL METALLIC TUBING UP TO AND INCLUDING 4 INCH MAY BE INSTALLED AS PERMITTED BY CODES REFERENCE WITHIN SPECIFICATION.

D. FLEXIBLE CONDUIT MAY BE INSTALLED AS PERMITTED BY CODES REFERENCED WITHIN SPECIFICATIONS. SEALTITE, FLEXIBLE CONDUIT USED FOR FINAL CONNECTIONS TO MOTORS AND IN WET, DAMP OR OUTDOOR AREAS WHERE DRAWINGS INDICATE THE USE OF FLEXIBLE CONDUIT.

E. CONDUITS THROUGHOUT THE WORK SHALL BE SECURELY AND RIGIDLY SUPPORTED. SUPPORTS PLACED NOT MORE THAN 10' APART AND WITH A SUPPORT PROVIDED NOT MORE THAN 3' FROM ANY OUTLET OR BEND.

F. CONDUIT PLACED AGAINST CONCRETE ABOVE GROUND FASTENED TO THE CONCRETE WITH PIPE STRAPS OR ONE-SCREW CONDUIT CLAMPS ATTACHED TO THE CONCRETE BY MEANS OF EXPANSION SCREW ANCHORS AND SCREWS.

G. CONDUITS, WHICH ARE INSTALLED AT THIS TIME AND LEFT EMPTY FOR FUTURE SHALL HAVE POLYVINYL ROPE, LEFT IN PLACE FOR FUTURE USE.

H. CONDUIT EXPOSED SHALL BE RUN AT RIGHT ANGLES OR PARALLEL TO THE WALLS OR STRUCTURES. ALL CHANGES IN DIRECTION EITHER HORIZONTALLY OR VERTICALLY SHALL BE MADE WITH CONDUIT OUTLET BODIES AS MANUFACTURED BY CROUSE HINDS OR EQUAL. CONDUITS RUN ON EXPOSED BEAMS OR TRELLISWORK SHALL BE PAINTED TO MATCH SURROUNDING SURFACES.

I. RE-ROUTE CONDUIT WHERE NECESSARY TO CLEAR STRUCTURAL AND MECHANICAL OBSTRUCTIONS.

J. RIGID STEEL CONDUIT SHALL BE USED IN THE FOLLOWING LOCATIONS:

1. EXPOSED ON INTERIOR OF BUILDINGS BELOW FIVE FEET.
2. EXPOSED ON EXTERIOR OF BUILDING.
3. EXPOSED ON ROOFS.
4. EMBEDDED IN CONCRETE OR MASONRY WALLS.

K. PVC SCHEDULE 40 NONMETALLIC CONDUIT SHALL BE USED FOR ALL UNDERGROUND RUNS EXCEPT COMBI-DUCT. NONMETALLIC CONDUIT SHALL NOT BE RUN IN SLABS OR WALLS, ABOVE CEILINGS OR EXPOSED. END BELLS SHALL BE PROVIDED AT CONDUIT TERMINATIONS.

L. RISERS ON UNDERGROUND CONDUIT RUNS SHALL BE PVC SCHEDULE 40 BELOW GRADE AND RIGID GALVANIZED STEEL WHERE THE RUN DAYLIGHTS ABOVE FINISHED FLOOR. PROVIDE INSIDE THREADED COUPLING FLUSH WITH FINISH CONCRETE SURFACE.

M. ELECTRICAL METALLIC TUBING UP TO AND INCLUDING 4-INCH MAY BE INSTALLED AS PERMITTED BY CODES EXCEPT AS OTHERWISE REFERENCED WITHIN THESE SPECIFICATIONS.

N. CONDUIT INSTALLATION:

1. SECURELY AND RIGIDLY SUPPORT ALL CONDUITS FROM BUILDING STRUCTURE. PROVIDE SUPPORTS MAXIMUM OF TEN FEET ON CENTERS AND WITHIN THREE FEET OF ALL BENDS, OUTLETS, JUNCTION BOXES, CABINETS, PANELS AND FITTINGS. CONDUITS SHALL BE SUPPORTED INDEPENDENT OF ALL PIPING, DUCT WORK, EQUIPMENT CEILING HANGER WIRES, AND SUSPENDED CEILING GRID SYSTEMS. SECURE BY MEANS OF UL LISTED AND APPROVED PIPE CLAMPS, "C" CHANNELS, FASTENERS, OR STRAPS.
2. INDIVIDUAL SUSPENDED CONDUITS SHALL BE SUPPORTED BY MEANS OF HANGER RODS AND PIPE CLAMPS. MULTIPLE SUSPENDED CONDUITS SHALL BE SUPPORTED BY MEANS OF TRAPEZE TYPE HANGERS AND PIPE CLAMPS. CONDUITS AND CONDUIT TRAPEZE SUPPORT SYSTEMS SHALL BE GUYED TO PREVENT SWAYING IN ANY DIRECTION.
3. INDIVIDUAL CONDUITS PLACED AGAINST BRICK, MASONRY OR CONCRETE WALLS OR SLABS SHALL BE SECURED WITH PIPE CLAMPS AND EXPANSION SHIELDS. INDIVIDUAL CONDUITS PLACED AGAINST DRY WALL OR PLASTER CONSTRUCTION SHALL BE SECURED BY MEANS OF PIPE CLAMPS AND SCREWS ATTACHED TO STUDS OR OTHER STRUCTURAL MEMBERS. THE USE OF TOGGLE BOLTS IS PROHIBITED. PROVIDE PREFORMED CHANNEL SUPPORTS FOR ALL MULTIPLE CONDUITS PLACED AGAINST WALLS OR SLABS.
4. CONDUIT RUN EXPOSED SHALL BE RUN AT RIGHT ANGLES OR PARALLEL TO THE WALLS OF STRUCTURES. ALL CHANGES IN DIRECTIONS, EITHER HORIZONTALLY OR VERTICALLY, SHALL BE MADE WITH CONDUIT OUTLET BODIES AS MANUFACTURED BY CROUSE HINDS OR EQUAL. CONDUITS RUN EXPOSED SHALL BE PAINTED TO MATCH SURROUNDING SURFACES.
5. PROVIDE EXPANSION AND DEFLECTION FITTINGS, AND BONDING JUMPER AT ALL BUILDING EXPANSION CROSSINGS, SEISMIC JOINT CROSSINGS, AND WHERE CONDUITS CROSS THE SEPARATION BETWEEN ADJACENT RELOCATABLE CLASSROOMS.
6. PROVIDE ALL TRENCHING, EXCAVATION, SHORING AND BACKFILLING REQUIRED FOR THE PROPER INSTALLATION OF UNDERGROUND CONDUITS. MAKE TRENCHES A MINIMUM OF 6-INCHES WIDER THAN THE DUCT BANK. COMPACTION TO BE AS DIRECTED BY ARCHITECT.
7. ALL CONDUITS BELOW GRADE SHALL BE FULLY ENCASED IN CONCRETE EXCEPT WHERE CONDUITS ARE UNDER AREAS PAVED WITH ASPHALT ORE CONCRETE.
8. WHERE CONCRETE ENCASEMENT IS SPECIFIED, PROVIDE A MINIMUM OF 3" OF CONCRETE BETWEEN EACH CONDUIT, THE TOP, BOTTOM AND SIDES OF THE DUCT BANK.

3.03 OUTLET JUNCTION BOXES

A. FLUSH MOUNTED BOXES SHALL BE ATTACHED TO TWO STUDS OR STRUCTURAL MEMBERS BY MEANS OF METAL SUPPORTS.

B. BOXES LOCATED ABOVE SUSPENDED CEILING SHALL BE ATTACHED TO STRUCTURAL MEMBERS. WHERE BOXES ARE SUSPENDED, THEY SHALL BE SUPPORTED INDEPENDENTLY OF THE CONDUIT SYSTEM BY MEANS OF HANGER RODS AND/OR PREFORMED STEEL CHANNELS. BOXES SHALL BE SUPPORTED INDEPENDENT OF ALL PIPING, DUCTWORK, EQUIPMENT CEILING HANGER WIRES AND SUSPENDED CEILING GRID SYSTEMS.

3.04 WIRE AND CABLE

A. BRANCH CIRCUIT AND FIXTURE JOINTS FOR #10 AWG AND SMALLER WIRE SHALL BE MADE WITH UL-APPROVED CONNECTORS LISTED FOR 600 VOLTS APPROVED FOR USE WITH COPPER AND/OR ALUMINUM WIRE. CONNECTOR TO CONSIST OF A CONE-SHAPED, EXPANDABLE COIL SPRING INSERT, INSULATED WITH A NYLON SHALL AND 2 WINGS PLACED OPPOSITE EACH OTHER TO SERVE AS A BUILT-IN WRENCH OR SHALL BE MOLDED ONE-PIECE AS MANUFACTURED BY "SCOTCHLOK".

B. BRANCH CIRCUIT JOINTS #8 AND LARGER SCREW PRESSURE LUGS MADE OF HIGH STRENGTH STRUCTURAL ALUMINUM ALLOY AND UL-APPROVED FOR USE WITH BOTH COPPER AND/OR ALUMINUM WIRE AS MANUFACTURED BY THOMAS & BETTS.

C. SPLICES INSULATED WITH PLASTIC SPLICING TAPE, HALF-LAPPED AND AT LEAST THE THICKNESS OF THE WIRE INSULATION. TAPE SHALL BE FRESH AND QUALITY EQUAL TO SCOTCH.

D. CORRESPOND EACH CIRCUIT TO THE BRANCH NUMBER INDICATED ON THE PANEL SCHEDULE SHOWN ON THE DRAWINGS EXCEPT WHERE DEPARTURES ARE APPROVED BY THE ARCHITECT OR THE OWNER'S INSPECTORS.

E. ALL WIRING, INCLUDING LOW VOLTAGE SHALL BE INSTALLED IN CONDUIT, UNLESS OTHERWISE NOTED.

F. CONTROL WIRING TO CONFORM TO THE WIRING DIAGRAMS SHOWN ON THE MECHANICAL DRAWINGS AND THE MANUFACTURER'S WIRING DIAGRAMS. CONTROL THE EQUIPMENT IN THE MANNER SPECIFIED UNDER THE "MECHANICAL" SECTION OF THE SPECIFICATIONS. CONTROL WIRE TO BE COLOR-CODED FOR EACH IN MAKING FINAL CONNECTIONS. TAG ALL SPARE CONDUCTORS.

G. WIRING WITHIN PANEL ENCLOSURES TO BE NEATLY GROUPED AND LACED WITH THOMAS & BETTS "TY-RAP" SPACED 3" APART AND FANNED OUT TO THE TERMINALS. TAG ALL SPARE CONDUCTORS.

3.05 TESTING

A. THE ENTIRE FIRE ALARM SYSTEM SHALL BE TESTED IN THE PRESENCE OF THE LOCAL DSA INSPECTOR AND A REPRESENTATIVE OF THE MANUFACTURER AFTER THE INSTALLATION IS COMPLETE.

1. INDIVIDUALLY ACTIVATE EACH MANUAL INITIATING STATION AND VERIFY CORRECT ALARM OPERATION AND CONTROL PANEL RESPONSE.
2. INDIVIDUALLY TEST EACH AUTOMATIC INITIATING DEVICE AND VERIFY CORRECT ALARM OPERATION, CONTROL PANEL RESPONSE AND REMOTE EQUIPMENT OPERATION.
3. THE COMMUNICATION LOOPS AND THE EVACUATION ALARM CIRCUITS SHALL BE OPENED IN AT LEAST TWO (2) LOCATIONS PER BUILDING TO CHECK FOR THE PRESENCE OF CORRECT SUPERVISORY CIRCUITRY.

B. TEST THE BATTERY BACK-UP SYSTEM BY DISCONNECTING THE INCOMING NORMAL POWER AND ALLOWING THIS ALARM SYSTEM TO OPERATE 24 HOURS ON BATTERY POWER. SOUND THE ALARM SYSTEM FOR FIVE MINUTES AT THE END OF 24 HOURS ON BATTERY POWER.

C. PERFORM ALL ELECTRICAL AND MECHANICAL TESTS REQUIRED BY THE EQUIPMENT MANUFACTURER'S CERTIFICATION FORM. MEASURE AND ADJUST EACH AUTOMATIC DETECTION DETECTORS TO THE MAXIMUM STABLE SENSITIVITY SETTING. DETECTOR TESTS SHALL BE PERFORMED WITH THE DETECTOR AT ITS OPERATIONAL LOCATION AND UNDER NORMAL OPERATIONAL ENVIRONMENTAL CONDITIONS IN THE AREA. BENCH SETTINGS ARE NOT ACCEPTABLE. AN OPERATIONAL CHECK-OUT TEST AND REPORT SHALL BE PERFORMED. SUBMIT SIX COPIES OF TEST REPORT RESULTS. THE TESTS AND REPORT SHALL INCLUDE, BUT NOT BE LIMITED TO:

1. A COMPLETE LIST OF EQUIPMENT INSTALLED AND WIRED.
2. INDICATION THAT ALL EQUIPMENT IS PROPERLY INSTALLED AND FUNCTIONS AND CONFORMS WITH THESE SPECIFICATIONS.
3. TEST OF INDIVIDUAL ZONES AS APPLICABLE.
4. SERIAL NUMBERS, LOCATIONS BY ZONE AND MODEL NUMBER FOR EACH INSTALLED DETECTOR.
5. VOLTAGE (SENSITIVITY) SETTINGS FOR EACH IONIZATION AND PHOTOELECTRIC DETECTOR AS MEASURED IN PLACE WITH THE HVAC SYSTEM OPERATING.
6. TECHNICIAN'S NAME, CERTIFICATE NUMBER AND DATE.
7. THE COMPLETED MANUAL AND AUTOMATIC MONITORING AND CONTROL SYSTEM SHALL BE TESTED TO INSURE THAT IT IS OPERATING PROPERLY. THIS TEST WILL CONSIST OF EXPOSING THE INSTALLED UNITS TO A STANDARD FIRE TEST.
8. ACCEPTANCE OF THE SYSTEM SHALL ALSO REQUIRE A DEMONSTRATION OF THE STABILITY OF THE SYSTEM. THIS SHALL BE ADEQUATELY DEMONSTRATED IF THE SYSTEM OPERATES FOR A NINETY (90) DAY TEST PERIOD WITHOUT ANY UNWARRANTED ALARMS. SHOULD AN UNWARRANTED ALARM(S) OCCUR, THE CONTRACTOR SHALL READJUST OR REPLACE THE EQUIPMENT AND DETECTOR(S) AND BEGIN ANOTHER NINETY (90) DAY TEST PERIOD. AS REQUIRED BY THE ARCHITECT, THE CONTRACTOR SHALL RECHECK THE DETECTORS USING THE FIRE TEST AFTER EACH READJUSTMENT OR REPLACEMENT OF DETECTORS. THIS TEST SHALL NOT START UNTIL THE DISTRICT HAS OBTAINED BENEFICIAL USE OF THE BUILDING UNDER TESTS.

D. WHEN THE TESTING HAS BEEN COMPLETED TO THE SATISFACTION OF BOTH CONTRACTOR'S JOB FOREMAN AND THE REPRESENTATIVES OF THE MANUFACTURER AND THE DSA INSPECTOR, A NOTARIZED LETTER CO-SIGNED BY EACH ATTESTING TO THE SATISFACTORY COMPLETION OF SAID TESTING SHALL BE PROVIDED BY THE CONTRACTOR AND FORWARDED TO THE ARCHITECT.

E. UPON THE RECEIPT OF CERTIFICATE OF COMPLIANCE, THE INSTALLER/SUPPLIER SHALL SUPPLY THE OWNER WITH A WRITTEN OPERATING, TESTING AND MAINTENANCE INSTRUCTIONS, POINT-TO-POINT AS-BUILT DRAWINGS, AND EQUIPMENT SPECIFICATIONS.

4.01 ASSISTIVE LISTENING SYSTEM

A. WORK INCLUDED: ALL LABOR, MATERIALS, APPLIANCES TOOLS, EQUIPMENT, FACILITIES TRANSPORTATION AND SERVICES NECESSARY FOR AND INCIDENTAL TO PERFORMING ALL OPERATIONS IN CONNECTION WITH FURNISHING, DELIVERY AND INSTALLATION OF THE WORK OF THIS SECTION, COMPLETE AS SHOWN ON THE DRAWINGS AND/OR SPECIFIED HEREIN. WORK INCLUDES, BUT IS NOT NECESSARILY LIMITED TO THE FOLLOWING:
1. EXAMINE ALL OTHER SECTIONS FOR WORK RELATED TO THOSE OTHER SECTIONS AND REQUIRED TO BE INCLUDED AS WORK UNDER THIS SECTION.
2. GENERAL PROVISIONS AND REQUIREMENTS FOR ELECTRICAL WORK.

1.2 SUBMITTALS (ADDITIONAL REQUIREMENTS)
A. SUBMIT BLOCK WIRING DIAGRAMS SHOWING COMPONENT INTERCONNECTION AND DESCRIPTIVE LITERATURE FOR ALL COMPONENT PARTS AND CABINETS.

1.3 EQUIPMENT QUALIFICATION
A. THE SPECIFICATION IS BASED ON THE EQUIPMENT OF MANUFACTURERS WHO HAVE BEEN APPROVED BY THE DISTRICT AND THE MANUFACTURERS HEREIN NAMED SHALL BE CONSIDERED AS MEETING THE REQUIREMENTS OF THIS SPECIFICATION. FOR ALL ITEMS WHICH ARE IDENTIFIED BY PART NUMBER AND MANUFACTURER THE PERFORMANCE SPECIFICATIONS WHICH ARE PUBLISHED IN THE MOST RECENT MANUFACTURER'S DATA SHEETS AVAILABLE AT THE TIME OF BIDDING THIS PROJECT SHALL BE APPLICABLE TO THE PRESENT WORK AS THOUGH FULLY WRITTEN OUT HEREIN.
B. ALL EQUIPMENT SHALL CONFORM TO ALL FEDERAL, STATE AND LOCAL APPLICABLE CODES AND ORDINANCES, AND SHALL BE LISTED BY UNDERWRITERS LABORATORIES.
C. THE CONTRACTOR SHALL HAVE BEEN ENGAGED IN THE BUSINESS OF SUPPLYING AND INSTALLING THE SPECIFIED TYPE OF SYSTEM FOR AT LEAST FIVE YEARS. THE CONTRACTOR SHALL MAINTAIN A FULLY EQUIPPED SERVICE ORGANIZATION TO PROVIDE ADEQUATE REPAIR SERVICE TO THE PROPOSED SYSTEM.

PART 2 - PRODUCTS
2.2 PORTABLE ASSISTIVE LISTENING SYSTEM
A. PROVIDE PORTABLE ASSISTIVE LISTENING SYSTEM FOR CONFERENCE ROOMS AND MEETING ROOMS IN BUILDING A.
B. PORTABLE ASSISTIVE LISTENING SYSTEM SHALL BE PHONIC EAR OR EQUAL TO MEET THE ADA REQUIREMENTS FOR HARD-OF-HEARING.

C. PROVIDE THE FOLLOWING PHONIC EAR EQUIPMENT FROM EACH OF THE ABOVE LISTED LOCATIONS:
1. ONE (1) PE550 BASE STATION WITH STANDARD ANTENNA.
2. ONE (1) AT2094 WALL TRANSFORMER.
3. ONE (1) PE300CS CHANGER WITH TRANSFORMER.
4. ONE (1) AT571 DYNAMIC MICROPHONE WITH AT572 25-FEET XLR TO XLR CABLE.
5. PE350FSR RECEIVER WITH RECHARGEABLE BATTERIES. QUANTITY EQUAL TO 4% OF THE OCCUPANT LOAD OF THE MULTI-PURPOSE ROOM AREA (2 MINIMUM).
6. AT541-S HEADSETS. QUANTITY EQUAL TO 4% OF THE SEATING LOAD OF THE CLASSROOMS AREA (2 MINIMUM).

PART 3 - EXECUTION
3.1 MATERIALS
3.2 PROVIDE A MINIMUM OF TWO (2) 4-HOUR PERIODS TO INSTRUCT DISTRICT PERSONNEL IN PROPER OPERATION OF SYSTEM. THE FIRST INSTRUCTIONAL PERIOD SHALL BE AND HELD PRIOR TO FINAL ACCEPTANCE OF THE SYSTEMS. THE SECOND INSTRUCTIONAL PERIOD SHALL BE WITHIN A PERIOD OF 1-YEAR AFTER FINAL ACCEPTANCE OF THE SYSTEMS, UPON REQUEST OF THE DISTRICT.

SECTION 27 41 00
AUDIO/VIDEO COMMUNICATIONS (CLASSROOM TECHNOLOGY)

PART 1 - GENERAL

1.01 SUMMARY

A. SECTION INCLUDES:
1. STAND-ALONE & NETWORKABLE, SCALABLE, ONE (1) ROOM AV CONTROL SYSTEM FOR EACH CLASSROOM INDICATED ON PLANS WITH KEYPAD CONTROL. AVAILABLE MODELS SUPPORT 1, 2, OR 3 SOURCE INPUTS, AND OPTION OF CEILING OR WALL MOUNTED SPEAKERS. SYSTEM INCLUDES CONTROL PROCESSOR, KEYPAD, AUDIO AMPLIFIER, SPEAKERS, AND AV INTERFACE CABLES REQUIRED TO INTEGRATE WITH A COMPATIBLE VIDEO PROJECTOR WITH WHITE BOARD OR SCREEN. BROWSER CONTROL INTERFACE, OPTIONAL TOUCH PANEL SUPPORT AND CAMPUS WIDE SCHEDULING AND MANAGEMENT SOFTWARE REQUIRE NO ADDITIONAL PROCESSING OR TRANSLATION HARDWARE.

B. RELATED INFORMATION:
1. DIVISION 26 SECTION "COMMON WORK RESULTS FOR COMMUNICATIONS".
2. DIVISION 26 SECTION "SCHEDULES FOR COMMUNICATIONS".
3. DIVISION 26 SECTION "COMMUNICATIONS HORIZONTAL CABLING" FOR COMMUNICATIONS CABLING REQUIREMENTS FOR MODULAR DIMMING CONTROL SYSTEM.
4. DIVISION 26 SECTION "AUDIO-VISUAL COMMUNICATIONS" FOR COMMUNICATIONS AND NETWORK CABLING REQUIREMENTS FOR AUDIO-VISUAL SYSTEMS AND OVER ALL CONTROL SYSTEMS COMMUNICATIONS.

1.02 REFERENCES

A. NATIONAL FIRE PROTECTION ASSOCIATION (NFPA):
1. NFPA 70 - NATIONAL ELECTRICAL CODE.

1.03 REFERENCES

A. ABBREVIATIONS
1. BAS: BUILDING AUTOMATION SYSTEM.
2. AV: AUDIO VISUAL.

1.04 SYSTEM DESCRIPTION

A. STAND-ALONE AND NETWORKABLE, SCALABLE, ONE (1) ROOM AV CONTROL SYSTEM WITH KEYPAD CONTROL. THE SYSTEM IS COMPOSED OF TWO (2) PARTS: THE PROJECTION DEVICE AND THE CONTROL AND AUDIO PACKAGE. THE CONTROL AND AUDIO PACKAGE INCLUDES ALL MAJOR COMPONENTS AND CABLES NEEDED TO PROVIDE A CONTROLLED AV CLASSROOM SYSTEM. THE CONTROL AND AUDIO PACKAGE SUPPORTS DIRECT INTEGRATION WITH THE FOLLOWING SYSTEMS AND DEVICES USING NATIVE CONTROL PROTOCOL:
1. NETWORKED SCHEDULING AND MANAGEMENT SOFTWARE.
2. COMMUNICATION WITH BUILDING WIDE AUDIO VISUAL SYSTEMS.
3. TOUCH PANEL CONTROLS.

B. UNIFIED SYSTEM INTEGRATION - CONTROLLER SUPPORTS NATIVE COMMUNICATION PROTOCOL OF AV CONTROL SYSTEM AND FACILITY MANAGEMENT SYSTEM, TCP/IP.

1.05 INFORMATIONAL SUBMITTALS

A. BUY AMERICAN ACT CERTIFICATE.
B. SAMPLE OF MANUFACTURER'S WARRANTY.

1.06 CLOSEOUT SUBMITTALS

A. OPERATING AND MAINTENANCE INSTRUCTIONS.

1.07 QUALITY ASSURANCE

A. MANUFACTURER QUALIFICATION: MANUFACTURER OF CONTROLLER WITH MINIMUM 5-YEARS RECORD OF SATISFACTORY MANUFACTURING AND SUPPORT OF COMPONENTS COMPARABLE TO BASIS OF DESIGN SYSTEM.

B. SOURCE REQUIREMENTS: PROVIDE MODULAR DIMMING CONTROLS HARDWARE AND SOFTWARE THROUGH A SINGLE SOURCE FROM A SINGLE MANUFACTURER.

C. MANUFACTURER QUALIFICATIONS: APPROVED MANUFACTURER OF CONTROLLER LISTED IN THIS SECTION WITH MINIMUM 5-YEARS RECORD OF SATISFACTORY MANUFACTURING AND SUPPORT OF COMPONENTS COMPARABLE TO BASIS OF DESIGN SYSTEM.
1. APPROVAL OF COMPARABLE PRODUCTS: SUBMIT THE FOLLOWING IN ACCORDANCE WITH PROJECT SUBSTITUTION REQUIREMENTS, WITHIN TIME ALLOWED FOR SUBSTITUTION REVIEW:
   a. PRODUCT DATA INDICATING COMPLIANCE WITH REQUIREMENTS OF THIS SECTION. B. SAMPLES OF EACH COMPONENT.
   c. SAMPLE SUBMITTALS FROM SIMILAR PROJECT.
   d. PROJECT REFERENCES: MINIMUM OF FIVE (5) COMPLETED INSTALLATIONS, WITH DISTRICT AND ARCHITECT CONTACT INFORMATION. E. SAMPLE WARRANTY.
2. SUBSTITUTIONS FOLLOWING AWARD OF CONTRACT ARE NOT ALLOWED EXCEPT AS STIPULATED IN DIVISION 01 GENERAL REQUIREMENTS.
3. APPROVED MANUFACTURERS MUST COMPLY WITH SEPARATE REQUIREMENTS OF SUBMITTALS ARTICLE.
4. ALL INSTALLATION MUST BE BY MANUFACTURER AUTHORIZED PERSONNEL.

D. REGULATORY REQUIREMENTS: PROVIDE COMPONENTS AND SYSTEMS THAT COMPLY WITH REQUIREMENTS OF THE FOLLOWING:
1. APPLICABLE CODES AND REGULATIONS.

1.08 COORDINATION

A. COORDINATE INTEGRATED AV CONTROLS WITH SYSTEMS AND COMPONENTS SPECIFIED IN THE FOLLOWING SECTIONS:
1. DIVISION 11 SECTION "AUDIO-VISUAL EQUIPMENT".
2. DIVISION 23 SECTION "INSTRUMENTATION AND CONTROL FOR HVAC".
3. DIVISION 16 SECTION "COMMUNICATIONS HORIZONTAL CABLING".
4. DIVISION 16 SECTION "AUDIO-VISUAL COMMUNICATIONS".
5. DIVISION 16 SECTION "AUDIO-VIDEO SYSTEMS".

1.09 WARRANTY

A. SPECIAL WARRANTY: MANUFACTURER'S STANDARD FORM IN WHICH MANUFACTURER AGREES TO REPAIR OR REPLACE, AT NO COST TO THE DISTRICT, ALL COMPONENTS OF CONTROLS SYSTEM THAT FAIL IN MATERIALS OR WORKMANSHIP WITHIN THE SPECIFIED WARRANTY PERIOD FOLLOWING SUBSTANTIAL COMPLETION.
1. WARRANTY PERIOD: TOUCH SCREEN DISPLAY AND OVERLAY COMPONENTS: 90 DAYS.
2. WARRANTY PERIOD: DISC DRIVES AND OTHER MOVING PARTS, PAN/TILT HEADS, AND POWER SUPPLIES:1 YEAR.
3. WARRANTY PERIOD: OTHER COMPONENTS, 3-YEARS.

B. MANUFACTURER'S EXTENDED SUPPORT SERVICE: EXTENDED TELEPHONE SUPPORT: UNLIMITED PERIOD, NO COST.

PART 2 - PRODUCTS

2.01 MANUFACTURERS

A. BASIS-OF-DESIGN MANUFACTURER: SUBJECT TO COMPLIANCE WITH REQUIREMENTS, PROVIDE PRODUCTS OFPANASONIC, LIBERTY WIRE AND CABLE, FRONT ROW, CRESTRON, EPSON, BUSINESS MACHINE SECURITY.

2.02 ROOM AV CONTROLLER

A. PRESENTATION CONTROLLER: INTEGRATED CONTROL OF SYSTEM POWER, SOURCE SELECTION, AND AUDIO VOLUME CONTROL AND REMOTE MANAGEMENT IN A TWO (2) GANG GROUNDED WALL MOUNT INTERFACE. SYSTEM INCLUDES AN ETHERNET LAN PORT FOR SYSTEM EXPANSION (UNLIMITED NUMBER OF ROOMS), SYSTEM CONTROL VIA WEB BROWSER AND OR ENTERPRISE LEVEL SYSTEM MANAGEMENT SOFTWARE, WITH 10 PROGRAMMABLE BUTTONS, CUSTOMIZABLE BACKLIT LABELING, LED FEEDBACK, AND CONTROL PORTS FOR CONTROLLING EXTERNAL DEVICES. TEN (10) CUSTOM PROGRAMMABLE PUSHBUTTONS, 1 RS-232, 1 IR/SERIAL CONTROL PORT, TWO (2) DIGITAL/ANALOG INPUTS, AND TWO (2) RELAY CONTROL PORTS. CONTROLLER MUST BE CODE-COMPATIBLE WITH OWNER'S PREVIOUS SITE INSTALLATIONS. CRESTRON MPC-M5-W

B. DISPLAY DEVICE REQUIREMENTS
1. PROJECTOR OR MONITOR REQUIREMENTS OWNER SHALL SPECIFY IF A PROJECTOR OR MONITOR WILL BE INSTALLED.THE MODEL SELECTED MUST BE APPROVED BY OWNER.PROJECTION DEVICE SHALL UTILIZE THE WHITE BOARD AS A SCREEN UNLESS OTHERWISE SPECIFIED.
2. VIDEO PROJECTOR MUST HAVE THE FOLLOWING CHARACTERISTICS/SPECIFICATIONS.
   a. VGA INPUTS: ONE (1) HD15F COMPUTER VGA INPUTS WITH RCA OR 3.5MM MINI-TRS STEREO AUDIO INPUTS.
   b. VIDEO INPUTS: ONE (1) RCA COMPOSITE VIDEO INPUTS WITH TWO (2) RCA OR 3.5MM MINI-TRS STEREO AUDIO INPUTS.
   c. HDMI INPUT: ONE (1) HDMI INPUT
   d. AUDIO OUTPUT: ONE (1) RCA OR 3.5MM MINI-TRS STEREO LINE-LEVEL OUTPUT WITH COMMAND CONTROLLABLE VOLUME.
   e. CONTROL: DB9M RS-232 (WITHOUT HARDWARE HANDSHAKING) AND ETHERNET. MUST PROCESS COMMANDS FOR SETTING POWER, DISPLAY MUTING, AUDIO VOLUME, AND INPUT PORT SELECTION. MUST PROCESS COMMANDS FOR READING THE CURRENT SETTINGS OF POWER, DISPLAY MUTING, AUDIO VOLUME, AND INPUT PORT SELECTED. MUST BE "CRESTRON ENABLED".
   f. RESOLUTION MUST BE WXGA OR BETTER. HIGH DEFINITION IS PREFERRED.
   g. IF OWNER CHOOSES AN INTERACTIVE PROJECTOR, A USB CONNECTION IS REQUIRED.
   h. MOUNTING: MUST BE WALL MOUNT COMPATIBLE WITH ULTRA-SHORT-THROW LENS.
   i. ACCEPTABLE PRODUCTS: SMART LIGHTRAISE 60WI2, EPSON 575W, PANASONIC PT-CW330U WITH ET-PKC200W.
3. MONITOR MUST HAVE THE FOLLOWING CHARACTERISTICS/SPECIFICATIONS.
   a. VGA INPUTS: ONE (1) HD15F COMPUTER VGA INPUTS WITH RCA OR 3.5MM MINI-TRS STEREO AUDIO INPUTS.
   b. VIDEO INPUTS: ONE (1) RCA COMPOSITE VIDEO INPUTS WITH TWO (2) RCA OR 3.5MM MINI-TRS STEREO AUDIO INPUTS.
   c. HDMI INPUT: ONE (1) HDMI INPUT
   d. AUDIO OUTPUT: ONE (1) RCA OR 3.5MM MINI-TRS STEREO LINE-LEVEL OUTPUT WITH COMMAND CONTROLLABLE VOLUME.
   e. CONTROL: DB9M RS-232 (WITHOUT HARDWARE HANDSHAKING) AND ETHERNET. MUST PROCESS COMMANDS FOR SETTING POWER, DISPLAY MUTING, AUDIO VOLUME, AND INPUT PORT SELECTION. MUST PROCESS COMMANDS FOR READING THE CURRENT SETTINGS OF POWER, DISPLAY MUTING, AUDIO VOLUME, AND INPUT PORT SELECTED. MUST BE "CRESTRON ENABLED".
   f. MOUNTING MUST BE WALL OR CEILING MOUNT COMPATIBLE. APPROPRIATE BMS MOUNT REQUIRED IF MOUNT IS NOT AVAILABLE FROM MANUFACTURER.
   g. MAXIMUM WEIGHT: 50-POUNDS (23 KG)
   h. MONITOR MUST BE A "COMMERCIAL GRADE" UNIT. HIGH DEFINITION IS PREFERRED.
   i. ACCEPTABLE PRODUCTS: PANASONIC PROFESSIONAL 80" INTERACTIVE TH-80LFB70U OR EQUIVALENT. (PER OWNER'S SELECTION/DIRECTION)

D. AMPLIFIER: AMPLIFIER MUST HAVE THE FOLLOWING CHARACTERISTICS/SPECIFICATIONS:
1. MINIMUM 15-WATTS PER CHANNEL OUTPUT POWER AND STEREO OR DUAL-MONO CONFIGURABLE.
2. CAPABLE OF DRIVING 4 SPEAKERS OR MORE IN MULTIPLES OF 2
3. MINIMUM 4 AUDIO INPUT CHANNELS PLUS 1 CHANNEL FOR WIRELESS MIC AUDIO.
4. PRIORITIZATION OF INPUT CHANNELS USING "SOUND DUCKING" FOR LOWER PRIORITY INPUTS
5. ETHERNET CONNECTION UTILIZING POE FOR EMERGENCY POWER AND FALL BACK OPERATIONS DURING A LOSS OF POWER.
6. CONTROL: POE ETHERNET. MUST PROCESS COMMANDS FOR SETTING AUDIO MUTING, AUDIO VOLUME, AND INPUT PORT SELECTION. MUST PROCESS COMMANDS FOR READING THE CURRENT SETTINGS OF DISPLAY MUTING, AUDIO VOLUME, AND INPUT PORT SELECTED.
7. MUST CONTAIN A BUILT IN WEB PAGE HOST FOR REMOTE CONFIGURATION
8. ACCEPTABLE PRODUCTS: FRONT ROW CM-3000 (TESTED), AUDIO ENHANCEMENTS MS-400 (UNTESTED).

E. VOICE AMPLIFICATION: MUST HAVE THE FOLLOWING CHARACTERISTICS/SPECIFICATIONS:
1. TWO (2) WIRELESS MICROPHONES, USING IR AND/OR RF TECHNOLOGY. WIRELESS UNIT WILL NOT INTERFERE WITH ADJACENT CLASSROOMS USING THE SAME TECHNOLOGY. PANASONIC WX-LR200 AND POWER SUPPLY
   a. TEACHER MICROPHONE SHALL HAVE VOLUME CONTROL FOR BOTH WIRELESS MICS AND AN EMERGENCY ALERT CAPABILITY. PANASONIC WX-LT350 WITH 3120-0001 BATTERY.
   b. STUDENT MICROPHONE SHALL HAVE ON/OFF CAPABILITY. PANASONIC WX-LT150 WITH 3120-0001 BATTERY.
2. IR/RF RECEIVER SHALL BE CEILING MOUNTED ON A BUSINESS MACHINES SECURITY DCP150-G 2X2 GRID MOUNTED PLATE NEAR CENTER OF ROOM, IN ACCORDANCE TO MANUFACTURER'S INSTRUCTIONS.
3. A DUAL CHARGING STAND AND POWER SUPPLY SHALL BE PROVIDED FOR THE MICROPHONES
4. MOMENTARY CONTACTS COMPATIBLE WITH CRESTRON CONTROLLER INPUT FOR INDICATING AN "ALERT" CONDITION.
5. OTHER PARTS: 3' CAT6 CABLE (IR TO SIGNAL BREAKOUT BOX, CAT6 CABLE FOR POE CONNECTION.

F. SPEAKERS: FOUR (4) MINIMUM CEILING MOUNT 8-INCHES, 8 OHM, 2-WAY, 15-WATTS MAXIMUM POWER HANDLING WITH 2X2 SUSPENDED CEILING GRID MOUNTABLE ENCLOSURE. CRESTRON FSDI8 2'x2' OR EXTRON SF228.

G. WALL PLATES - 3 INPUT SYSTEM:
PER LIBERTY WIRE AND CABLE DRAWING NUMBER CSCWB-CQ86398-4 (WHITE), CSCWB-CQ86398-3 (BEIGE). USE PLATE COLOR (PART NUMBER) SPECIFIED BY OWNER.

H. CABLES: RS-232 PROJECTOR CONTROL CABLE (3 20AWG CONDUCTORS + SHIELD, ETHERNET CAT6 LAN CABLE, 16AWG SPEAKER CABLE, SHIELDED VGA VIDEO, SHIELDED TRS-TRS AUDIO, SHIELDED HDMI CABLE MINIMUM LENGTH POSSIBLE. CONTRACTOR WILL PROVIDE ALL NECESSARY CABLES TO COMPLETE THE INSTALLATION ACCORDING TO DRAWING AND/OR INSTRUCTIONS PROVIDED BY OWNER.

PART 3 - EXECUTION

3.01 EXAMINATION

A. PRIOR TO INSTALLATION, EXAMINE WORK AREA TO VERIFY MEASUREMENTS, AND THAT COMMENCING INSTALLATION COMPLIES WITH MANUFACTURER'S REQUIREMENTS.

3.02 INSTALLATION

A. COMPLY WITH REQUIREMENTS OF DIVISION-26 SECTIONS "COMMON WORK RESULTS FOR COMMUNICATIONS."

B. DO NOT INSTALL AV OR CONTROL DEVICES UNTIL SPACE IS ENCLOSED, HVAC SYSTEMS ARE RUNNING, AND OVERHEAD AND WET WORK IN DIMMING CONTROL WORK SPACE ARE COMPLETE.

C. INSTALL CONTROL DEVICES IN ACCORDANCE WITH MANUFACTURER'S INSTRUCTIONS AND LABEL ACCORDING TO OWNER'S INSTRUCTIONS.
D. INSTALL SPEAKERS IN ACCORDANCE WITH MANUFACTURER'S INSTRUCTIONS.
E. INSTALL PROJECTOR AND MOUNT IN ACCORDANCE WITH MANUFACTURER'S INSTRUCTIONS.
F. GROUNDING: PROVIDE ELECTRICAL GROUNDING IN ACCORDANCE WITH NFPA 70.
G. PERFORM SETUP FOR EACH AUDIO-VISUAL EQUIPMENT COMPONENT.
H. ALL POE EQUIPMENT SHALL BE SET UP AS DHCP WITH A SPECIFIC "HOSTNAME". A LIST OF MAC ADDRESSES WITH HOSTNAMES SHALL BE SUPPLIED TO OWNER'S TECHNOLOGY DEPARTMENT PRIOR TO INSTALLATION. EACH DEVICE SHALL BE LABELED WITH THE ASSIGNED HOSTNAME AND INSTALLED IN ITS ASSIGNED LOCATION. A SAMPLE DEVICE SHALL BE PROVIDED TO OWNER'S TECHNOLOGY DEPARTMENT IN ADVANCE OF INSTALLATION FOR NETWORK COMPATIBILITY TESTING.
I. SPEAKERS SHALL BE MOUNTED ACCORDING TO MANUFACTURERS INSTRUCTIONS. INSTALLATION SHALL NOT ALLOW RESONANCE BETWEEN SPEAKER ASSEMBLY AND CEILING GRID SYSTEM AT ANY AUDIBLE FREQUENCIES.

3.02 SYSTEM STARTUP

A. PROVIDE SYSTEM STARTUP AND ADJUSTMENT TO OCCUPIED CONDITIONS IN ACCORDANCE WITH MANUFACTURER'S RECOMMENDATIONS.

B. PERFORM OPERATIONAL TESTING TO VERIFY COMPLIANCE WITH SPECIFICATIONS. ADJUST AS REQUIRED.

3.04 CLOSEOUT ACTIVITIES

A. TRAINING: TRAIN DISTRICT PERSONNEL TO OPERATE, MAINTAIN, AND PROGRAM MODULAR DIMMING CONTROLS.

1. CONTRACTOR TO SCHEDULE TWO (2) TRAINING SESSIONS; ONE ON-SITE SESSION WITH SITE STAFF (AS DESIGNATED BY SITE ADMINISTRATOR) AND FASO MAINTENANCE TECHNICIANS BEFORE BENEFICIAL OCCUPANCY; AND ONE ON-SITE TRAINING WITH FASO TECHNICIANS IN THE FIRST MONTH OF OCCUPANCY.

tBP
architecture
planning
interiors

tBP/Architecture
4611 Teller Avenue
Newport Beach, CA 92660
ph: 949.673.0300 fx: 949.732.3895

LICENSED ARCHITECT HUNG L. CHENG NO. C34187 REN. 4-30-19 STATE OF CALIFORNIA

architect

REGISTERED PROFESSIONAL ENGINEER STEVEN R. ... No. E 10372 Exp. 09-30-18 ELECTRICAL STATE OF CALIFORNIA

FBA Engineering
Consulting Electrical Engineers
150 Paularino Avenue Suite A120
Costa Mesa, CA 92626
949.852.9995 • 949.852.1657 (fax)
fbaengr.com
FBA Job Number: 212.214

consultant

FILE NO.:
IDENTIFICATION STAMP
DIVISION OF THE STATE ARCHITECT
DEPARTMENT OF GENERAL SERVICES
AC ______ FLS ______ SS ______
DATE ______

DEPARTMENT OF GENERAL SERVICES
DSA Los Angeles Regional Office
700 N. Alameda Street, Suite 5-500
Los Angeles, California 90012
ph: (213)897-3995 fx: (213)897-3159/0726

DUNSMORE ELEMENTARY SCHOOL
RELOCATABLE CLASSROOMS

GLENDALE UNIFIED SCHOOL DISTRICT
4717 DUNSMORE AVE.
LA CRESCENTA, CA 91214

owner

tBP project number : 20967.00
file name:
drawn by: checked by:
date: March 2017

Rev:	date:	description:

THIS DRAWING AND THE DESIGNS, DEPICTIONS, IDEAS AND OTHER INFORMATION CONTAINED HEREIN CONSTITUTE UNPUBLISHED WORK OF tBP/ARCHITECTURE AND SHALL REMAIN THE PROPERTY OF tBP/ARCHITECTURE IN PERPETUITY. NO PART THEREOF SHALL BE REPRODUCED, DISCLOSED, DISTRIBUTED, SOLD, PUBLISHED OR OTHERWISE USED IN ANY WAY WITHOUT THE ADVANCED EXPRESS WRITTEN CONSENT OF tBP/ARCHITECTURE.

drawing title:
ELECTRICAL SPECIFICATIONS

drawing no.:
E1.1

drawing of

MODULAR CLASSROOM BUILDINGS

BUILDING SIZE: 24' x 40'

PC 04-104801

DGS State of California • Department of General Services • Gray Davis, Governor
DIVISION OF THE STATE ARCHITECT
Headquarters• 1130 K Street, Suite 101 • Sacramento, CA 95814 • (916) 445-8100

STRUCTURAL TESTS AND INSPECTIONS

Testing Laboratory: | Date: | File Number:
Name: | Application Number:
District / Owner:
Architect:
Structural Engineer:

The following tests and inspections, as checked, will be required as detailed in applicable specifications.

COMPACTED FILL	Concrete	Gunite	Grout	Mortar	
☐ Fill material, acceptance tests					Test of aggregates for mix design only
☐ Compaction control, continuous					Suitability tests of aggregates as detailed below
☐ Compaction tests only as ordered	✓				Mix designs
☐ Bearing capacity of compacted fill	✓				[redacted]
REINFORCING STEEL					Inspect placing
☒ Sample and test bar steel					Sample
☒ Sample and test mesh	✓				Compression tests
☐ Inspect placing at job					Pick up samples at job
STRUCTURAL STEEL					Samples delivered to laboratory
☒ Sample and test as detailed below					Deliver sample forms to job site
☒ Shop fabrication inspection					Sample and test cement
☐ Field erection inspection					
☒ Inspection of welds - Shop					
☐ Inspection of welds - Field					
☐ Inspection of riveting or bolting - Shop					
☐ Inspection of riveting or bolting - Field					
☐ Sample and test high strength bolts and washers					
BRICK AND BLOCK					
☐ Sample and test					
☐ Test only					
☐ Inspection of placing					
☐ Core drill samples					
GLUED LAMINATED STRUCTURAL LUMBER					
☐ Fabrication inspection					
☐ Sample and test steel accessories					
☐ Inspect fabrication of steel accessories					

Suitability Tests	Concrete	Gunite	Grout	Mortar
☐ Sodium sulphate				
☐ Structural strength				
☐ Los Angeles rattler				
☐ Clay (Hydrometer method)				
☐ Reactivity tests				
☐ Volume change				

Mix designs: Concrete, Gunite, Mortar, or Grout

Material	Maximum Size	28 Day Compressive Strength, PSI, Minimum
[illegible] CONC	[illegible]	[illegible] PSI
LIGHT CONC	[illegible]	3600 PSI

List of structural steel members to be tested:
ALL STEEL NOT PROPERLY IDENTIFIED PER CBC CHAPTER 22 (MILL CERTS)

Is this list continued on reverse? ☐ YES ☐ NO

Other tests and inspections, together with special instructions:
GROUND TEST

Copies of reports to: ARCHITECT OF RECORD

Are these instructions continued on reverse? ☐ YES ☐ NO

By: _____ Authorized Representative

SSS 103-1 (Revised 8/99)

APPLICABLE CODES (AS OF JANUARY 2014)

NOTE: 2013 STANDARDS APPLY FOR ACCESS & FIRELIFE SAFETY ALTERATIONS TO EXISTING BUILDINGS ONLY. STRUCTURAL REMAINS.

DATE SIGNED
APR 16 2003

PC
CBC 2001

"AS ALTERNATE FOR ALL SHOT PIN ATTACHMENTS, USE #10 S.T.M.S. AT THE SAME SPACING."

#10 USE MAX. 3/8" MATERIAL
#12 USE MAX. 1/2" MATERIAL

ALL WELDS USED IN PRIMARY MEMBERS AND CONNECTIONS IN THE LATERAL FORCE-RESISTING SYSTEMS SHALL BE MADE WITH A FILLER METAL THAT HAS A MINIMUM CHARPY V-NOTCH TOUGHNESS OF 20 FT-LBS AT MINUS 20 DEGREES F, AS DETERMINED BY AWS CLASSIFICATION OR MANUFACTURER CERTIFICATION.

BUILDING CODES AND STANDARDS

2013 BUILDING ADMINISTRATIVE CODE (CAC), PART 1, TITLE 24 C.C.R.
2013 CALIFORNIA BUILDING CODE (CBC), VOLUME 1 & 2, PART 2, TITLE 24 C.C.R.
(2012 INTERNATIONAL BUILDING CODE VOLUMES 1-3)
(2013 CALIFORNIA AMENDMENTS)
2013 CALIFORNIA ELECTRICAL CODE (CEC), PART 3, TITLE 24 C.C.R.
(2013 CALIFORNIA AMENDENTS)
(2011 NATIONAL ELECTRICAL CODE)
2013 CALIFORNIA MECHANICAL CODE (CMC), PART 4, TITLE 24 C.C.R.
(2012 IAPMO UNIFORM MECHANICAL CODE)
(2013 CALIFORNIA AMENDMENTS)
2013 CALIFONIA PLUMBING CODE (CPC), PART 5, TITLE 24 C.C.R.
(2012 IAPMO UNIFORM PLUMBING CODE)
(2013 CALIFORNIA AMENDMENTS)
2013 CALIFORNIA ENERGY CODE, PART 8, TITLE 24 C.C.R.
(2013 EDITION CALIFORNIA ENERGY COMMISSION BUILDING ENERGY EFFICENCY STANDARDS)
2013 CALIFORNIA FIRE CODE, PART 9, TITLE 24 C.C.R.
(2012 INTERNATIONAL FIRE CODE)
(2013 CALIFORNIA AMENDMENTS)
2013 CALIFORNIA GREEN CODE, PART 11, TITLE 24 C.C.R.
2013 CALIFORNIA REFERENCED STANDARDS CODE, PART 12, TITLE 24 C.C.R.

WITH THE SIGNING OF THESE DRAWINGS, WE ACKNOWLEDGE THAT WE HAVE REVIEWED THESE PLANS AND SPECIFICATIONS AND HAVE FOUND THEM TO BE IN GENERAL COMPLIANCE WITH THE BID DRAWINGS, SPECIFICATIONS AND ASSOCIATED ADDENDA. WHEN THESE PLANS AND SPECIFICATIONS HAVE BEEN APPROVED BY THE DIVISION OF THE STATE ARCHITECT, THEY SHALL PRESIDE OVER CONFLICTING AREAS IN THE BID DRAWINGS AND SPECIFICATIONS, AND ANY ADDENDA THERETO.

— CONFIDENTIAL —
THIS DOCUMENT AND THE INFORMATION CONTAINED HEREIN ARE THE PROPERTY OF MODTECH, INC. UNAUTHORIZED COPYING, DISCLOSURE OR OTHER UNAUTHORIZED USES ARE PROHIBITED!

BUILDING DATA

STRUCTURAL DESIGN: ORDINARY MOMENT RESISTANT FRAME
TYPE OF CONSTRUCTION: V-N
WIND LOAD (EXP C): [redacted] 80 MPH
SEISMIC ZONE 4, SEISMIC SOURCE TYPE A, DISTANCE ≤1.25 MILES
Z = .4 I = 1.0 Cv = 1.28 Nv = 2.0
R = 4.5 Ca = 0.66 Na = 1.5 SOIL TYPE = S_D
FLOOR LIVE LOAD: 50 PSF, [redacted]
ROOF LIVE LOAD: 20 PSF
OCCUPANCY: 24'x40' CLASSROOM: E-2 [redacted]
BUILDING AREA: 24'x40' BUILDING = 960 SF [redacted]

THIS PC IS DESIGNED STRUCTURALLY TO SUPPORT THE WEIGHT OF A FIRE SPRINKLER SYSTEM.

LEGEND

SYMBOL	DESCRIPTION
1 / –	DETAIL-1 ON SAME SHEET AS SYMBOL
1 / F2	DETAIL-1 ON SHEET F2.
A / S2	SECTION-A ON SHEET S2.
1	KEY NOTE (ON SAME SHEET AS SYMBOL)
1	REVISION IN DRAWING
CLOUD	HIGHLIGHTS REVISED AREA
2	DOOR REFERENCE
A	WINDOW REFERENCE
FIN	FINISH ITEM(S) SEE FINISH SCHEDULE, SHEET, A5.01
STR	STRUCTURAL ITEM(S) SEE STRUCTURAL DRAWINGS
PLG	PLUMBING ITEM(S) SEE PLUMBING DRAWINGS
HV	HEATING, VENTILATING & AIR CONDITIONING ITEM(S) SEE MECHANICAL DRAWINGS
EL	ELECTRICAL ITEM(S) SEE ELECTRICAL DRAWINGS
RAMP	RAMP – SEE RAMP DRAWINGS

ABBREVIATIONS

AGC	=	ABOVE GRADE CONCRETE
BGC	=	BELOW GRADE CONCRETE
CLR	=	CLEAR
DIA, ø	=	DIAMETER
GA	=	GAUGE
ID	=	INSIDE DIAMETER, IDENTIFICATION
MAX	=	MAXIMUM
MIN	=	MINIMUM
NIC	=	NOT IN CONTRACT
NTS	=	NOT TO SCALE
OC	=	ON CENTER
OD	=	OUTSIDE DIAMETER
OSB	=	ORIENTED STRAND BOARD
ROH	=	ROOF OVERHANG
SHT	=	SHEET
SIM	=	SIMILAR
STS	=	SELF TAPPING SCREW
STSMS	=	SELF TAPPING SHEET METAL SCREW
TYP	=	TYPICAL
UON, UNO	=	UNLESS OTHERWISE NOTED
WIC	=	WOODWORK INSTITUTE OF CALIFORNIA

IDENTIFICATION STAMP
DIV. OF THE STATE ARCHITECT
OFFICE OF REGULATION SERVICES
04 105337
FLS
DATE JUN-0 6 2003

SHEET INDEX

ARCHITECTURAL

A0.01 COVER SHEET
A1.01 FLOOR PLAN
[redacted]
A2.03 REFLECTED CEILING PLAN (12-LIGHTS)
A2.04 REFLECTED CEILING DETAILS
[redacted]
A3.11 ROOF PLAN – 22 GA/DUAL PITCH
A3.13 ROOF DETAILS – 22 GA.
[redacted]
A4.11 EXTERIOR ELEVATIONS – 22 GA/DUAL PITCH
[redacted]
A4.31 ARCHITECTURAL DETAILS – WOOD STUDS
[redacted]
A5.01 INTERIOR ELEVATIONS
A6.01 DOOR, WINDOW, AND HARDWARE SCHEDULES
A6.02 ROOM FINISH SCHEDULE
A7.01 MISCELLANEOUS OPTIONS

STRUCTURAL

[redacted]
F3.01 FOUNDATION PLAN – BGC – 50, 50+20 PSF
F3.11 FOUNDATION DETAILS – BELOW GRADE CONCRETE
S1.01 FLOOR FRAMING PLAN – WOOD DECK,
[redacted]
S2.11 ROOF FRAMING PLAN – 22 GA/DUAL PITCH – (8 & 12 LIGHTS)
[redacted]
S3.11 STRUCTURAL FRAMING – 22 GA/DUAL – (8 & 12 LIGHTS)
[redacted]
S4.01 WALL FRAMING – WOOD STUDS
S4.02 WALL FRAMING DETAILS – WOOD STUDS
[redacted]

MECHANICAL

[redacted]
M1.03 MECHANICAL (HVAC) PLAN – (12 LIGHTS)

ELECTRICAL

[redacted]
E1.03 ELECTRICAL PLAN – (12 LIGHTS)

PLUMBING

[redacted]

RAMP

[redacted]

FILE PATH: ...\440-A0.01.DWG

PROJECT NO. 4562

PC-04-104801

REVISIONS			
1			
2			
3			
4			
5			

Electrical Engineer's Seal

Mechanical Engineer's Seal

PC Professional Engineer's Record Seal
REGISTERED PROFESSIONAL ENGINEER JAMES T. SIMPSON No. 24992 STRUCTURAL STATE OF CALIFORNIA
LICENSE EXPIRES 6-30-2004

Architects Seal

IDENTIFICATION STAMP
DIV. OF THE STATE ARCHITECT
OFFICE OF REGULATION SERVICES
PC-04
104801
NO. APP. ms W/ sig D/L
DATE 5/20/03

MODTECH™ INC.
2830 BARRETT AVENUE
PERRIS, CALIF. 92571
PH (909) 943-4014
FAX (909) 940-0427

PROJECT NUMBER: 4562

© MODTECH, INC. 2002

DRAWN BY: dt.
DATE: 6-02-03
CHECKED BY:
DATE:

MODTECH Index No.

COVER SHEET

A0.01

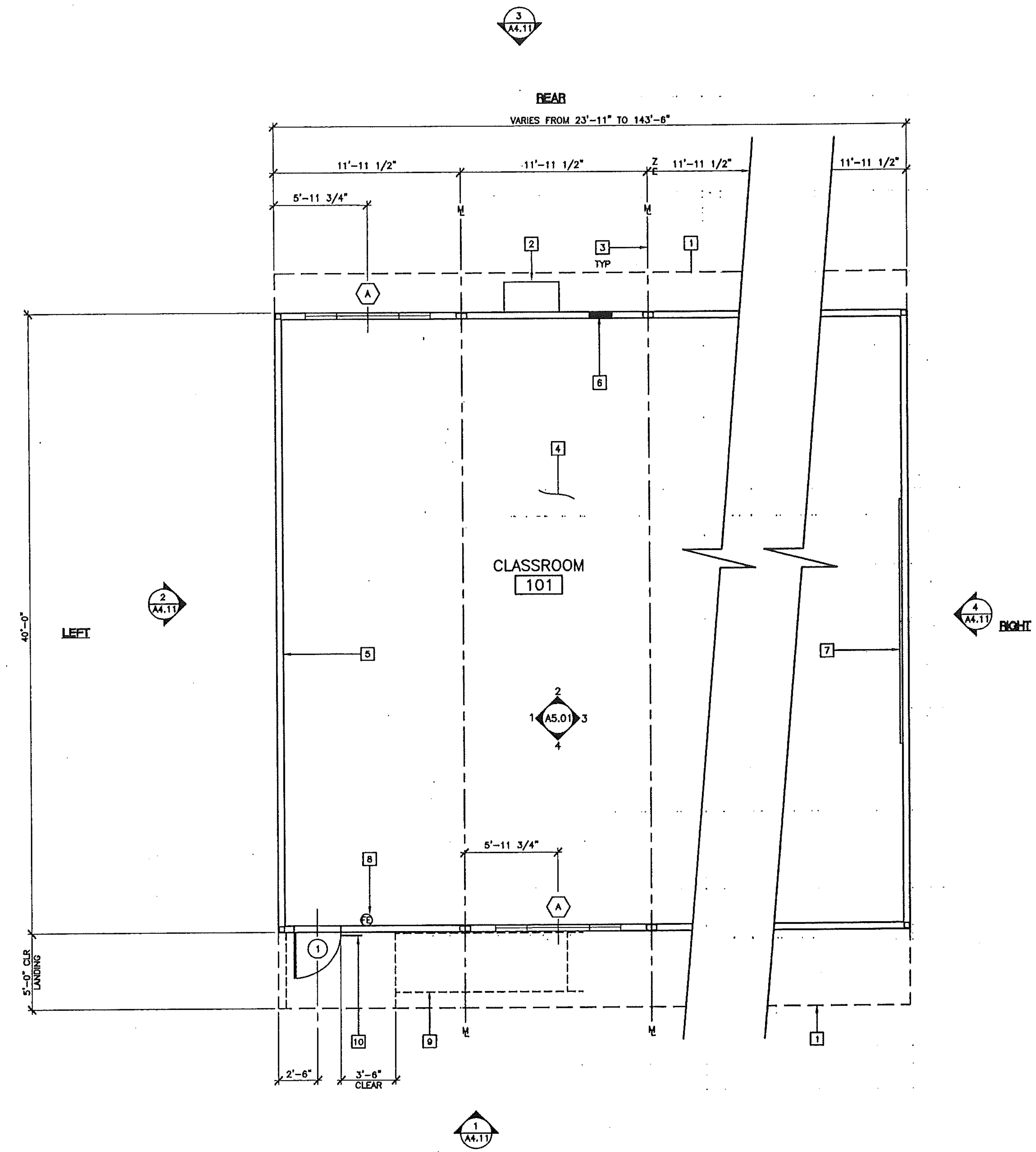

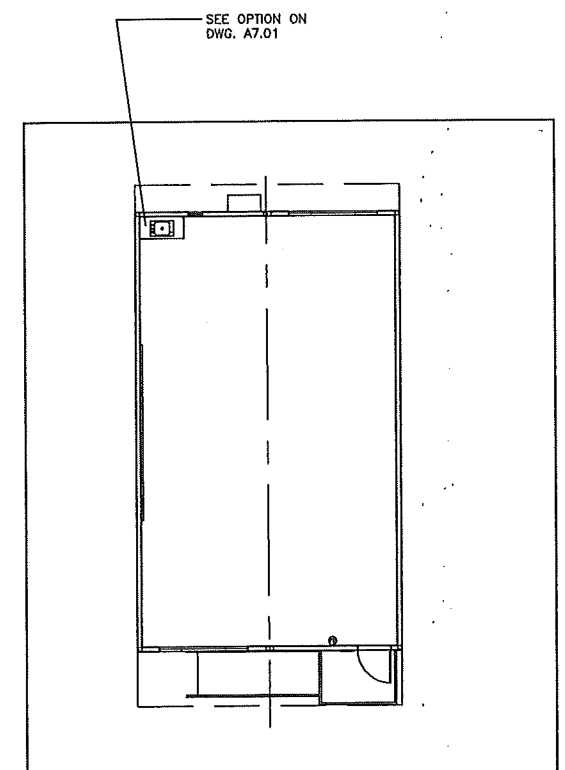

ACTUAL BLDG. PLAN

DATE SIGNED APR 30 2003

PC

CBC 2001

FLOOR PLAN

SCALE: 1/4" = 1'-0"

KEY NOTES

1. ROOF OVERHANG
2. HVAC UNIT (HV)
3. MODLINE (ML)
4. FINISH FLOORING (FIN)
5. INTERIOR FINISH (FIN)
6. ELECTRICAL PANEL (EL)
7. 2- 8'X4' MARKER BOARDS (SEE SPECIFICATIONS FOR TYPE)
8. FIRE EXTINGUISHER - 5 POUNDS DRY CHEMICAL WITH 2A - 10BC UL RATING ON WALL MTD BRACKET, HANDLE AT 48" AFF
9. RAMP/LANDING (RAMP) SEE SHEETS R1 - R4
10. SIGNAGE PROVIDED AND INSTALLED BY DISTRICT PRIOR TO OCCUPANCY. SEE SHEET A6.01

NOTES

1. PLACE (2) PERMANENT METAL IDENTIFICATION LABELS ON EACH MODULE. (1) LABEL AT REAR EXTERIOR AND (1) LABEL ABOVE CEILING LINE AT INTERIOR FRAME. LABELS WILL BE MECHANICALLY FASTENED AND SHOW THE DSA APPLICATION NUMBER, MANUFACTURERS NAME AND SERIAL NUMBER, DESIGN LIVE LOAD FOR ROOF AND FLOOR FRAMING, WIND SPEED AND EXPOSURE CATEGORY.
2. INSULATION MATERIALS INSTALLED WITHIN FLOOR/CEILING ASSEMBLIES, ROOF-CEILING ASSEMBLIES, WALLS, CRAWL SPACES OR ATTICS SHALL HAVE A FLAME SPREAD RATING NOT TO EXCEED 25 AND A SMOKE DENSITY NOT TO EXCEED 450. EXCEPTIONS:
   (1) FOAM PLASTIC INSULATION SHALL COMPLY WITH SECTION 2602
   (2) WHEN MATERIALS ARE INSTALLED IN CONCEALED SPACES OF TYPES III, IV, AND V CONSTRUCTION, THE FLAME SPREAD AND SMOKE-DEVELOPED LIMITATIONS DO NOT APPLY TO FACINGS IF THE FACING IS INSTALLED IN SUBSTANTIAL CONTACT WITH THE UNEXPOSED SURFACE OF THE CEILING, FLOOR OR WALL FINISH (CBC SECTION 707.3)
   (3) CELLULOSE LOOSE FILL INSULATION SHALL COMPLY WITH CPSC 16 CFR PARTS 1209 AND 1404
3. INTERIOR SIDE WALLS MAY BE LOCATED ON EITHER SIDE OF MODLINE
4. DISTRICT TO PROVIDE OCCUPANCY LOAD SIGN PER CBC 1007.2.6 PRIOR TO OCCUPANCY
5. ADEQUATE EXITS, EXIT WIDTH, AND SEPARATION OF EXITS SHALL BE PROVIDED AS REQUIRED BY CBC CHAPTER 10
6. PANIC HARDWARE IS REQUIRED WHEN THE CONFIGURATION OF ANY ROOM PROVIDES AN OCCUPANT LOAD OF 50 OR GREATER PER CBC 1007.3.10

IDENTIFICATION STAMP DIV OF THE STATE ARCHITECT OFFICE OF REGULATION SERVICES
04 105337
AC FLS SS
DATE JUN 0? 2003

FILE PATH: 2440-A1.01.DWG

REVISIONS			
1			
2			
3			
4			
5			

Electrical Engineer's Seal

Mechanical Engineer's Seal

PC Professional of Record Seal

REGISTERED PROFESSIONAL ENGINEER JAMES T. SIMPSON No. 3602 STRUCTURAL STATE OF CALIFORNIA

LICENSE EXPIRES 6-30-2004

Architects Seal

IDENTIFICATION STAMP DIV. OF THE STATE ARCHITECT OFFICE OF REGULATION SERVICES
PC-04
104801
AC FLS SS
DATE 5/1/03

MODTECH™ INC.

2830 BARRETT AVENUE
PERRIS, CALIF. 92571
PH (909) 943-4014
FAX (909) 940-0427

PROJECT NUMBER: 4562

© MODTECH, INC. 2002

DRAWN BY: dt.
DATE: 6-02-03
CHECKED BY:
DATE:

MODTECH Index No.
A1.01

FLOOR PLAN

PROJECT NO. 4562

PC-04-104801

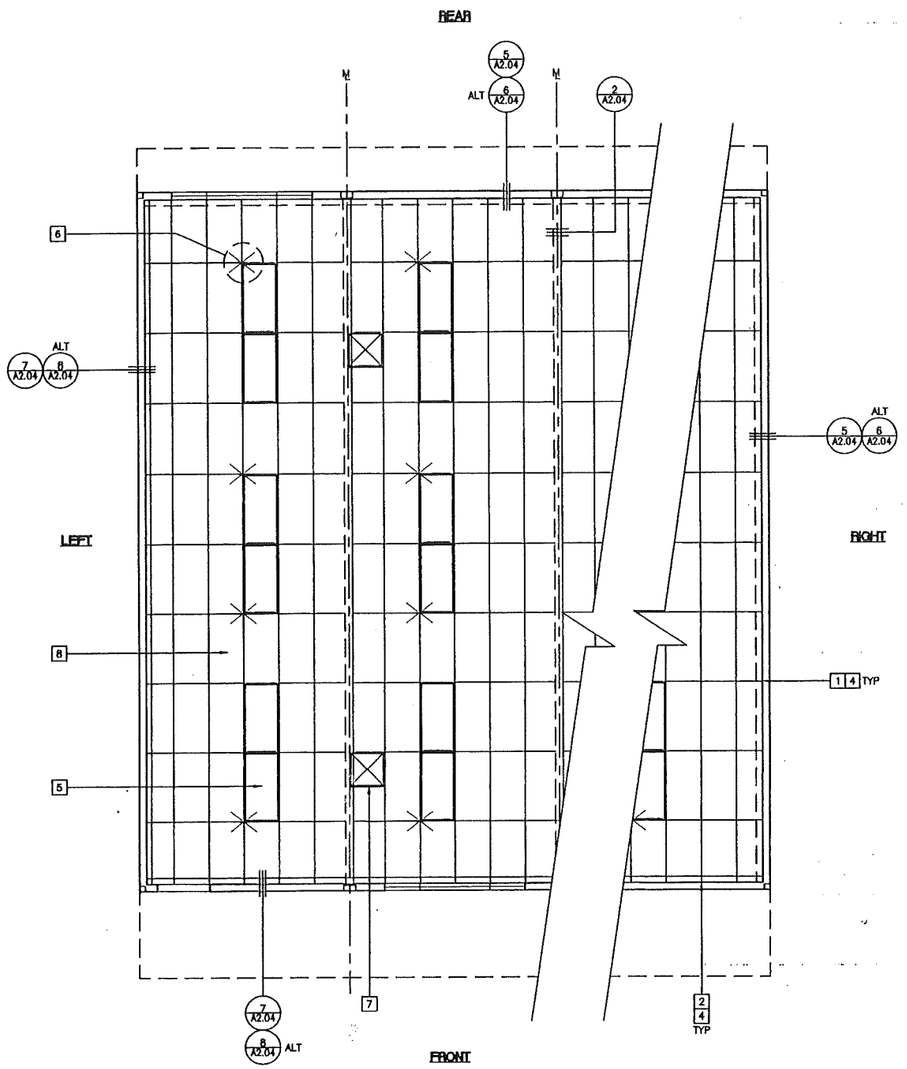

1 STANDARD REFLECTED CEILING PLAN

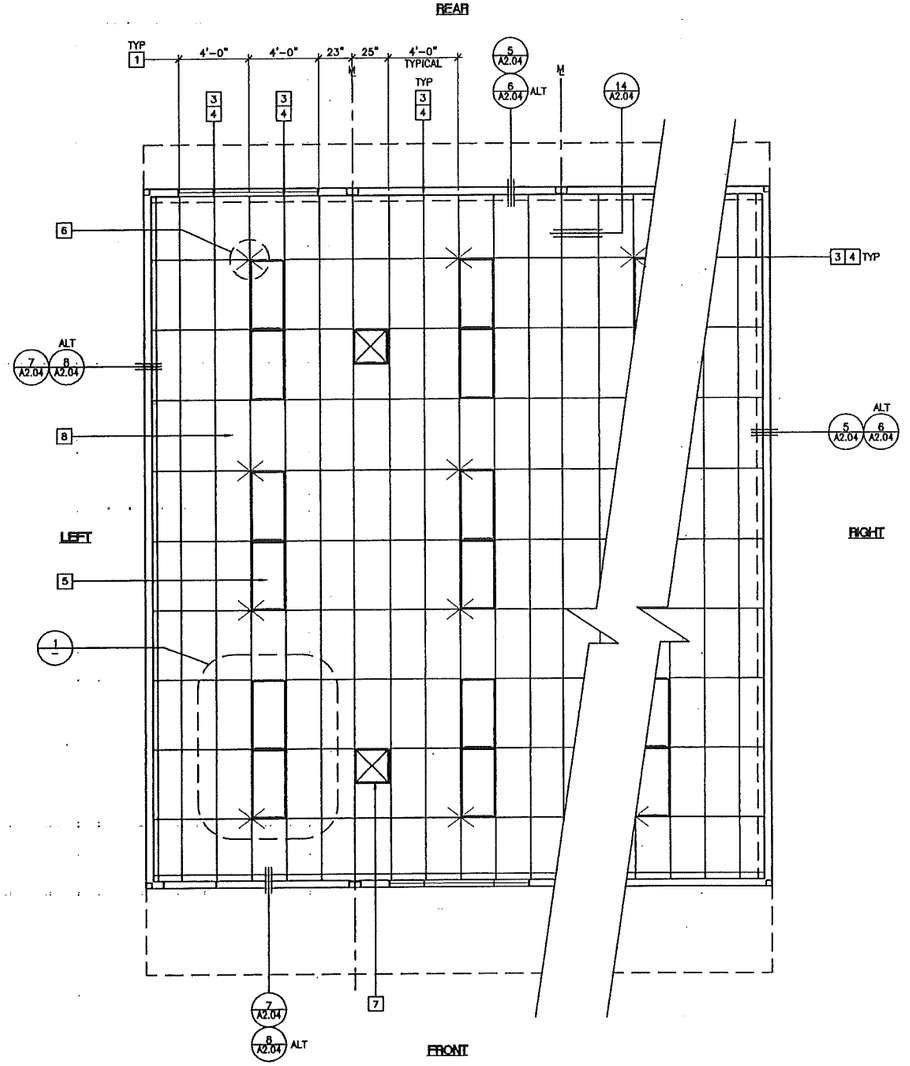

2 BAYONET CEILING PLAN

IDENTIFICATION STAMP
DIV. OF THE STATE ARCHITECT
OFFICE OF REGULATION SERVICES
04 105337
AC FLS
DATE JUN 0 6 2003

REFLECTED CEILING PLAN (12 LIGHTS)

SCALE: 1/4" = 1'-0"

DATE SIGNED
APR 30 2003

PC
CBC 2001

KEY NOTES

1. MAIN RUNNERS AT 4'-0" OC WITH 12 GA HANGER WIRES AT END OF EACH RUNNER
2. CROSS TEE AT 2'-0" OC (STANDARD CEILING PLAN ONLY)
3. CROSS TEE AT 4'-0" OC (BAYONET CEILING PLAN ONLY)
4. T-BAR PART NUMBERS

	ARMSTRONG PA-041	CHICAGO METALLIC PA-026	USG PA-030
RUNNER MAIN	7301	200	DX 26
4' CROSS TEE	7342	1210	DX 422
4' CROSS TEE (AT LIGHTS)	7341	1204	DX 626
2' CROSS TEE	7328	1228	DX 216
WALL ANGLE	7800	1420-01	M-7

5. LIGHT FIXTURE, RECESSED, 2'x4' TYPICAL – 11/A2.04
6. 4 WAY SPLAY AT LOCATIONS INDICATED, WIRES TAUT BUT NOT TO DISTORT GRID – 1/A2.04
7. HVAC SUPPLY REGISTER, 2'x2' TYPICAL – 12/A2.04
8. CEILING PANELS: 2'x4' LAY-IN PANELS, ASTM FLAME SPREAD CLASS 1 (0-25). SMOKE DEVELOPMENT DENSITY LESS THAN 450 TYPICAL.

NOTES

1. AT THE END OF ROWS OF RUNNERS A 12 GA HANGER WIRE SHALL BE ATTACHED WITHIN 8" OF WALL OR SOFFIT.
2. VERTICAL WIRES MORE THAN 1-IN-6 OUT OF PLUMB SHALL HAVE COUNTER BRACING WIRES.
3. RUNNERS MAY BE ATTACHED TO WALLS OR MOLD AT (2) ADJACENT WALLS – OTHER WALLS NO ATTACHMENT. CLEARANCE OF 1/2" BETWEEN END OF RUNNERS AND FACE OF WALL
4. DUCTWORK SHALL BE RIGIDLY ATTACHED TO BUILDING AND SHALL NOT BE CLOSER THAN 6" TO HANGER WIRES.
5. VERTICAL WIRE SPACING 4' O.C. ALONG EVERY MAIN RUNNER

LEGEND

- T & T BAR CEILING
- 2'X 4' ELEC. FIXTURE RECESSED
- SUPPLY AIR DIFFUSER
- SPLAY WIRE
- INDICATES FIXED SIDE 7/A2.04
- INDICATES FREE SIDE 5/A2.04

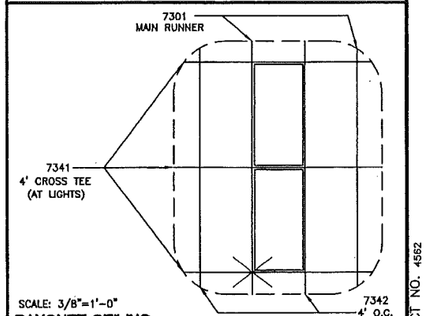

SCALE: 3/8"=1'-0"
BAYONET CEILING

4' CROSS TEE AT LIGHTS 1

REVISIONS		
1		
2		
3		
4		
5		

Electrical Engineer's Seal

Mechanical Engineer's Seal

PC Professional of Record Seal
REGISTERED PROFESSIONAL ENGINEER
JAMES T. SIMPSON
No. 24002
STRUCTURAL
STATE OF CALIFORNIA
LICENSE EXPIRES 6-30-2004

Architects Seal

IDENTIFICATION STAMP
DIV. OF THE STATE ARCHITECT
OFFICE OF REGULATION SERVICES
PC-04
104801
AC FLS SS
DATE 5/14/03

MODTECH™ INC.
2830 BARRETT AVENUE
PERRIS, CALIF. 92571
PH (909) 943-4014
FAX (909) 940-0427

PROJECT NUMBER: 4562

© MODTECH, INC. 2002

DRAWN BY: dt.
DATE: 6-02-03
CHECKED BY:
DATE:

MODTECH Index No.

REFLECTED CEILING PLAN (12 LIGHTS) A2.03

PROJECT NO. 4562

FILE PATH: 2440-A2.03.DWG

PC- 04-104801

17

13 SPLAY BRACING WIRE 9

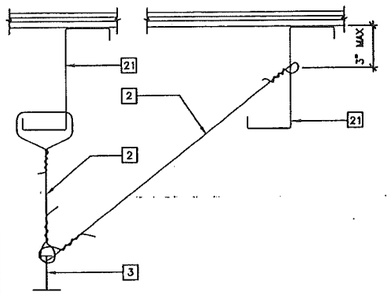

TYPICAL FREE SIDE 5

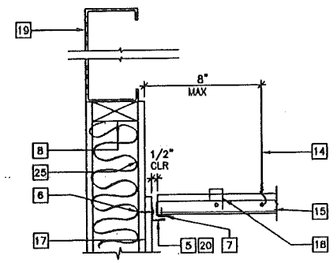

SIESMIC SPLAY - 4 WAY 1

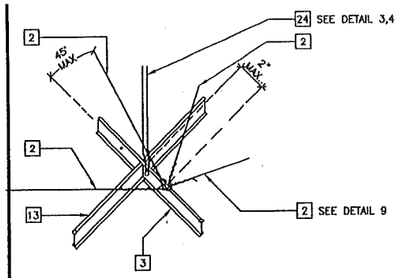

18

(OPTIONAL) BAYONET GRID AT MODLINE 14

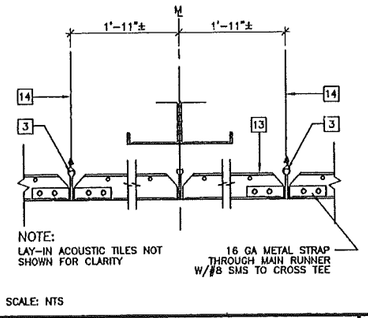

SCALE: NTS

HANGER WIRE DETAIL 10

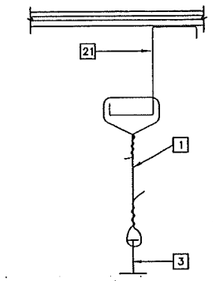

ALTERNATE FREE SIDE 6

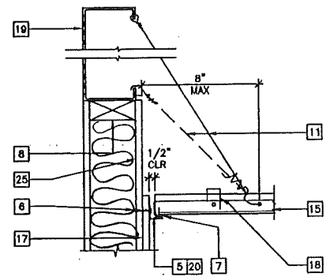

GRID AT MODLINE 2

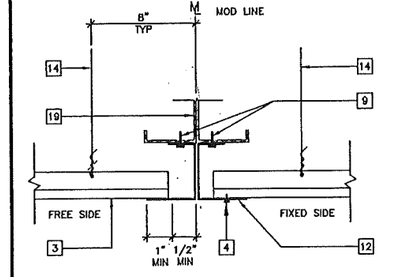

SCALE: 3"=1'

NOTE: FREE SIDE TO FIXED SIDE SHOWN
FREE SIDE TO FREE SIDE SIMILAR

19

HARD CEILING DETAIL 15

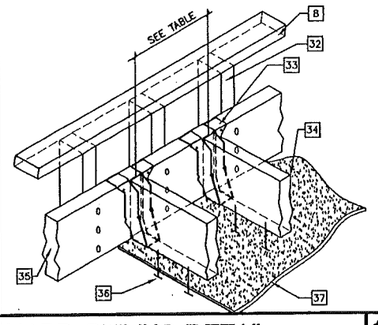

LIGHT FIXTURE MOUNTING 11

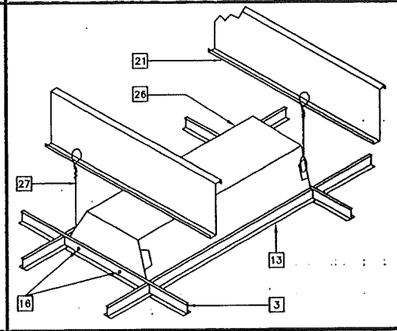

TYPICAL FIXED SIDE 7

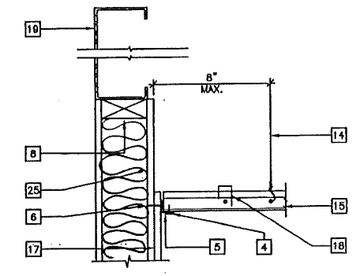

COMPRESSION STRUT 3

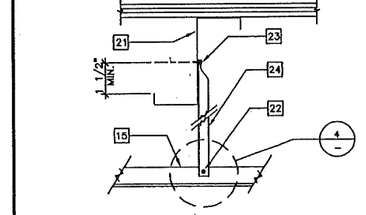

NOTE: CONDUIT MAY BE CRIMPED ON EITHER SIDE OF T-BAR DEPENDING UPON CONDITION & LOCATION

PC
CBC 2001

20

HVAC DUCTWORK MOUNTING 16

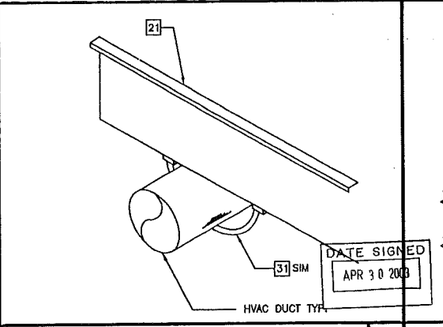

HVAC REGISTER MOUNTING 12

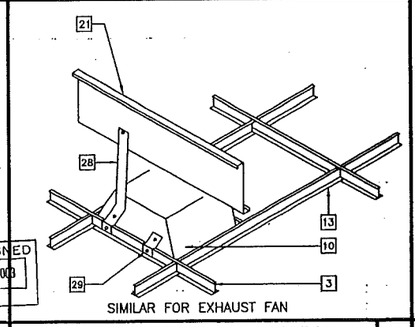

SIMILAR FOR EXHAUST FAN

ALTERNATE FIXED SIDE 8

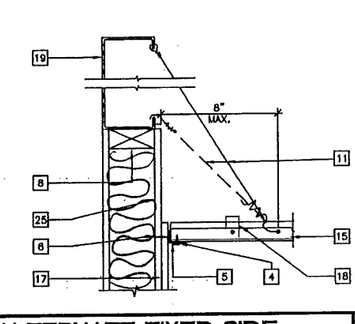

ALTERNATE COMPRESSION STRUT 4

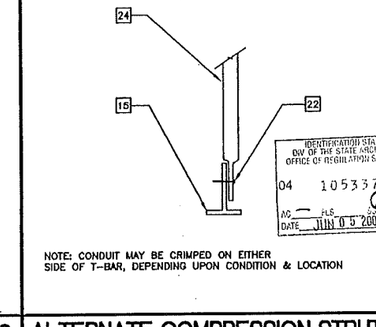

NOTE: CONDUIT MAY BE CRIMPED ON EITHER SIDE OF T-BAR, DEPENDING UPON CONDITION & LOCATION

IDENTIFICATION STAMP
DIV. OF THE STATE ARCHITECT
OFFICE OF REGULATION SERVICES
04 105337
AC FLS
DATE JUN 05 2003

KEY NOTES

1. HANGER WIRE AT 4'-0" OC IN PUNCHED OR DRILLED HOLE
2. SPLAY BRACE WIRE TO RUN IN SAME PLANE AS RUNNERS AT MAX 45° FROM CEILING PLANE
3. MAIN RUNNER
4. 1/8" DIA POP RIVET TO EACH T-BAR
5. WALL ANGLE
6. 6d NAIL AT 16" OC AT WALL STUDS (WOOD STUDS) #8 STSMS AT 16" OC AT WALL STUDS (STEEL STUDS)
7. ANGLE WITH 1/8" DIA POP RIVET TO EACH T-BAR, NO CONNECTION TO WALL ANGLE
8. TOP PLATE
9. #10 STSMS AT 4' OC
10. HVAC REGISTER, 2'x2' TYPICAL
11. HANGER TO TOP LIP OF ROOF BEAM WHERE NO PURLIN ABOVE MAX SLOPE 1" IN 6", ALTERNATE: CONNECT TO BOTTOM LIP (DASHED) WHERE THERE IS INTERFERENCE WITH DUCTWORK
12. 26 GA CEILING MOUNT X 2" ⊏
13. CROSS TEE
14. HANGER WIRE AT THE END ON EACH RUNNER TO PURLIN MAX DISTANCE FROM WALL 6" OR 1/4 LENGTH OF END TEE RUNNER, WHICHEVER IS LESS, SEE 10/A2.04
15. MAIN RUNNERS OR CROSS TEES
16. #8 STSMS, (2) AT EACH END
17. FINISH WALL
18. HORIZONTAL STRUTS SHALL RUN CONTINUOUS AT ALL PERIMETERS, NOT POP RIVETED TO THE WALL ANGLE ARMSTRONG #7425 OR #7445 WITH SPRING STEEL SNAP TO RUNNER PER IR M-3
19. ROOF BEAM
20. NO POP RIVETS
21. ROOF PURLIN
22. CRIMP CONDUIT AND ATTACH TO T-BAR GRID WITH (1) #8 TEKSCREW
23. CRIMP CONDUIT AND ATTACH TO PURLIN WITH (1) #8 TEKSCREW
24. 3/4" EMT CONDUIT
25. ~~FIBERGLASS BLANKET~~ INSULATION FOR FIRE BLOCK
26. RECESSED LIGHT FIXTURE
27. SLACK WIRES, TOTAL OF (2) LOCATED AT OPPOSITE CORNERS OF FIXTURE OR REGISTER
28. (2) 26 GA STRAPS, FASTEN WITH #8 STSMS (1) TO REGISTER AND (1) TO ROOF PURLIN OR ROOF BEAM
29. 24 GA REGISTER CLIP, FASTEN WITH #8 STSMS (1) TO CEILING GRID AND (1) TO REGISTER, (2) CLIPS AT EACH END
30. ROOF SHEATHING
31. (2) 26 GA. STRAPS, FASTEN w/#8 STSMS (1) TO REGISTER AND (1) TO ROOF PURLIN OR ROOF BEAM
32. TYPICAL WALL FRAMING
33. SIMPSON STRONG TILE LB26 FOR 2x6 OR LB24 FOR 2x4. ATTACH WITH MANUFACTURERS RECOMMENDED NAILING.
34. 2x4, AND 2x6 CEILING JOIST

size / species & grade	Spacing	HemFir Stud	HemFir No 2	HemFir No 1	DFL Stud	DFL No. 2
2x4	12"oc	11'-3"	11'-7"	12'-2"	11'-10"	12'-5"
	16"oc	10'-3"	10'-6"	11'-0"	10'-9"	11'-3"
	24"oc	8'-11"	9'-2"	9'-8"	9'-5"	9'-10"
2x6	12"oc	17'-8"	18'-2"	19'-1"	18'-8"	19'-6"
	16"oc	16'-1"	16'-6"	17'4"	16'-11"	17'-8"
	24"oc	14'-1"	14'-5"	15'-2"	14'-9"	15'-6"

35. 2x6 – ATTACH TO WALL WITH (3) 16D BOX NAILS TYP.
36. DRY WALL SCREWS TYPICAL
37. 1/2" GYP. BOARD

NOTES

1. ALL HANGER, SPLAY BRACE & SLACK WIRES SHALL BE 12 GA WITH MIN 4 TIGHT TURNS WITHIN 1 1/2" MAX OF EACH END
2. FIRE BLOCKING TO BE PROVIDED AT CEILING LEVEL OF ALL WALLS. FIRE BLOCKING MAY BE OF WOOD, GYPSUM BOARD, CEMENT FIBER BOARD OR BATTS OR BLANKETS OF MINERAL OR GLASS FIBER INSULATION PER CBC SECTION 708.2.2.

FILE PATH: 2440-A2.04.DWG

PROJECT NO. 4562

PC- 04-104801

REVISIONS

1			
2			
3			
4			
5			

Electrical Engineer's Seal

Mechanical Engineer's Seal

PC Professional of Record Seal
REGISTERED PROFESSIONAL ENGINEER JAMES T. SIMPSON 16602 STRUCTURAL STATE OF CALIFORNIA
LICENSE EXPIRES 6-30-2004

Architects Seal

IDENTIFICATION STAMP
DIV. OF THE STATE ARCHITECT
OFFICE OF REGULATION SERVICES
PC-04
104801
AC FLS SS AVL
DATE 5/7/03

MODTECH™ INC.
2830 BARRETT AVENUE PH (909) 943-4014
PERRIS, CALIF. 92571 FAX (909) 940-0427

PROJECT NUMBER: 4562

© MODTECH, INC. 2002

DRAWN BY: dt.
DATE: 6-02-03
CHECKED BY:
DATE:

MODTECH Index No.

REFLECTED CEILING DETAILS

A2.04

REAR

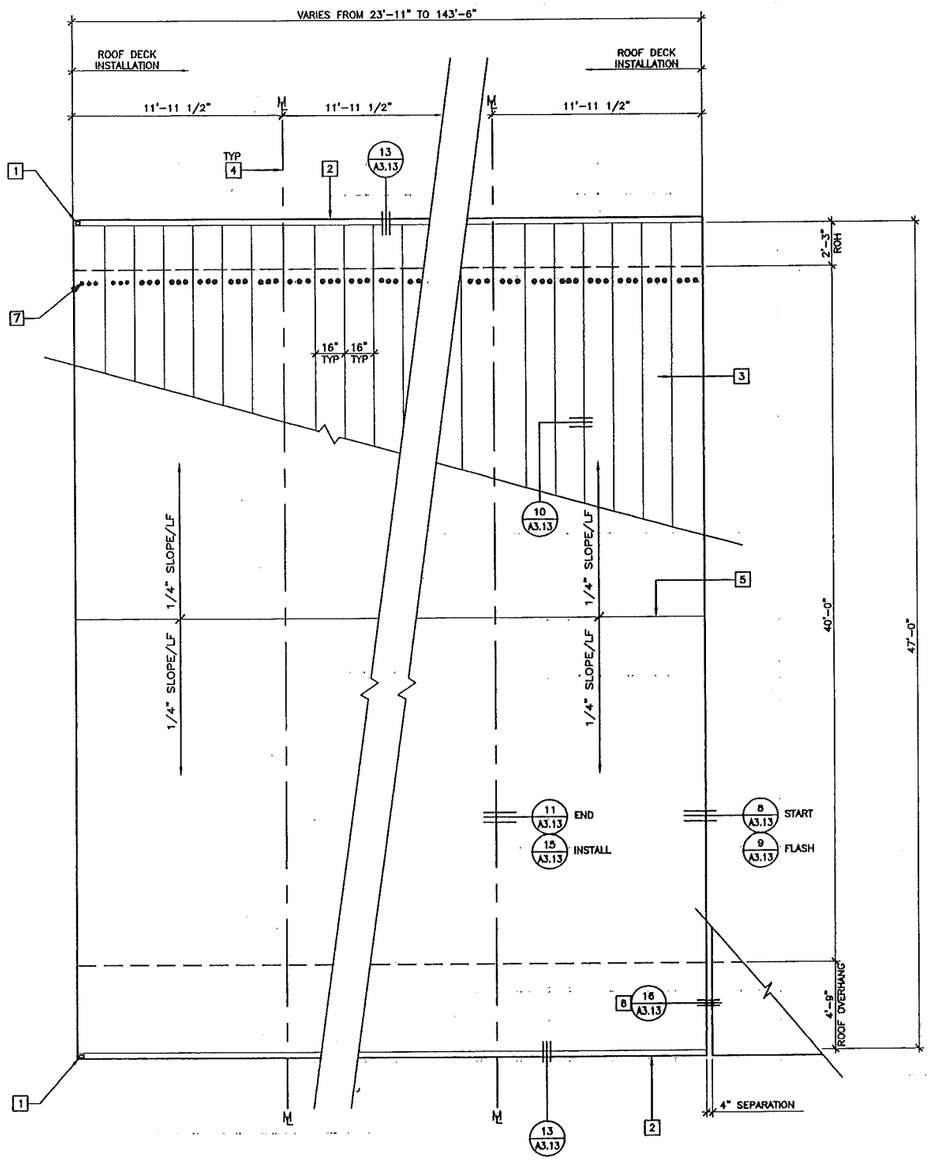

LEFT

RIGHT

FRONT

KEY NOTES

1. DOWNSPOUT -14/A3.13
2. CONTINUOUS GUTTER 26 GA -5/A3.13
3. 22 GA MIN INTERLOCKING ROOF PANELS OVER 20 GA STRAP CROSS BRACING - CLASS A ROOFING SYSTEM
4. MODLINE (ML)
5. RIDGELINE
6. 4" SEPARATION AS REQUIRED PER FLOOR PLAN
7. #14 STSMS x 3/4" W/NEOPRENE WASHER - 3 PER PAN MAX 6" OC

NOTES

1. BUILDINGS HOUSING GROUP E OCCUPANCIES SHALL HAVE ROOF COVERINGS AS SPECIFIED IN CBC TABLE 15A - CLASS A OR B.

IDENTIFICATION STAMP
DIV. OF THE STATE ARCHITECT
OFFICE OF REGULATION SERVICES
04 105337
AC — PLS — SS
DATE JUN 05 2003

DATE SIGNED
APR 10 2003

PC
CBC 2001

ROOF PLAN

22 GA DUAL PITCH (23'-11" TO 143'-6")
SCALE: 1/4" = 1'-0"

REVISIONS					
1					
2					
3					
4					
5					

Electrical Engineer's Seal

Mechanical Engineer's Seal

PC Professional of Record Seal
REGISTERED PROFESSIONAL ENGINEER JAMES T. STRUCKMAN STATE OF CALIFORNIA
LICENSE EXPIRES 6-30-2004

Architects Seal

IDENTIFICATION STAMP
DIV. OF THE STATE ARCHITECT
OFFICE OF REGULATION SERVICES
PC-04
104801
AC PLS SS
DATE 5/14/03

MODTECH™ INC.
2830 BARRETT AVENUE
PERRIS, CALIF. 92571
PH (909) 943-4014
FAX (909) 940-0427

PROJECT NUMBER: 4562

© MODTECH, INC. 2002

DRAWN BY: dt.
DATE: 6-02-03
CHECKED BY:
DATE:

MODTECH Index No.

ROOF PLAN 22 GA DUAL PITCH

A3.11

FILE PATH: 2440-A3.11.DWG

PROJECT NO. 4562

PC-04-104801

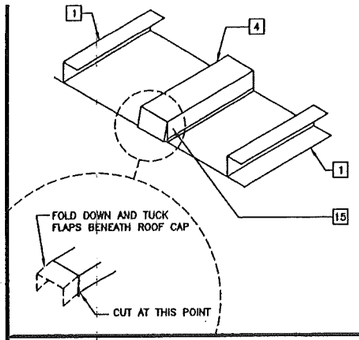

ROOF CAP | 17

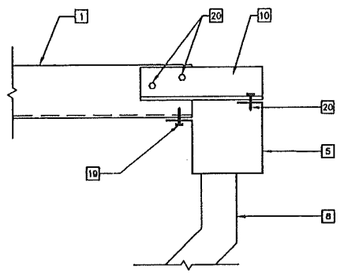

GUTTER AT ROOF OVERHANG | 13

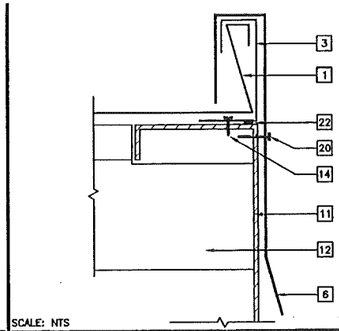

SCALE: NTS

ROOF FLASHING AT SIDE WALL | 9

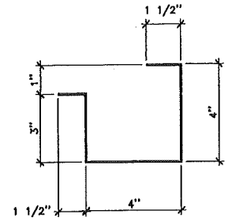

SCALE: NTS

CONTINUOUS 26 GA GUTTER | 5

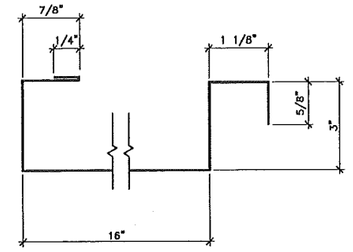

22 GA STEEL G90LFQ

SCALE: NTS

ROOF PAN | 1

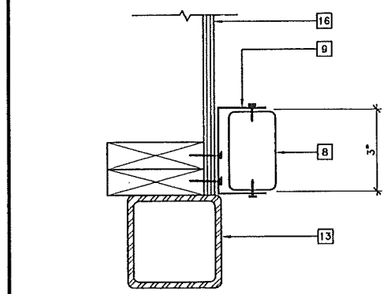

SCALE: 4"=1'-0"

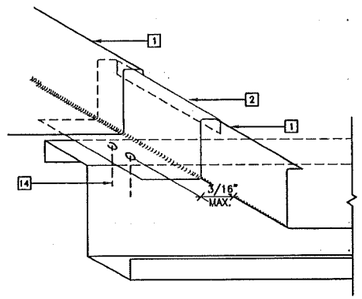

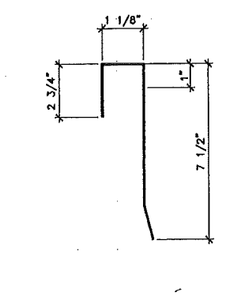

SCALE: NTS

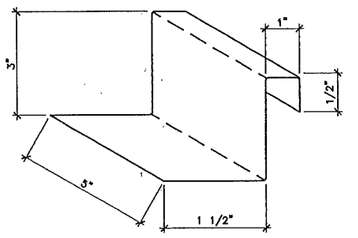

SCALE: NTS

	18	DOWNSPOUT ATTACHMENT	14	ROOF STANDING SEAM	10	ROOF FLASHING AT SIDE WALL	6	ROOF CLIP	2

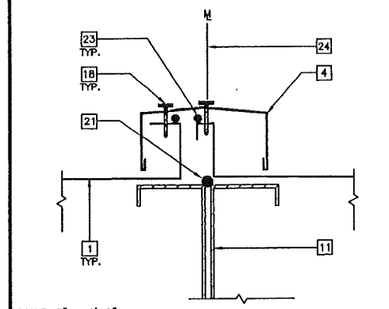

SCALE: 3" = 1'-0"

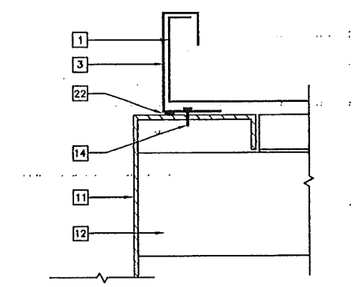

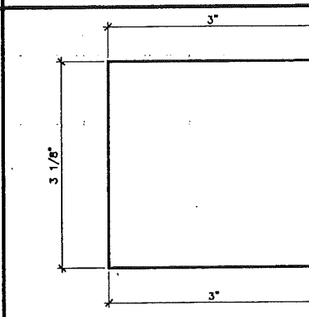

SCALE: NTS

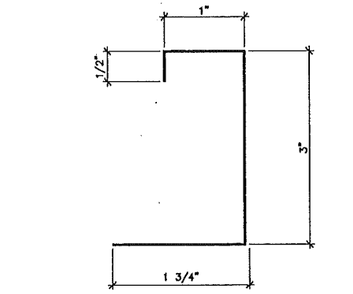

SCALE: NTS

	19	ROOF CAP AT MODLINE	15	END ROOF PAN CONNECTION	11	ROOF FLASHING AT HIGH SIDE	7	STARTER/END ROOF CLIP	3

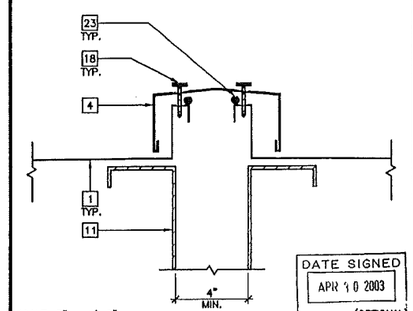

SCALE: 3" = 1'-0"

DATE SIGNED
APR 10 2003
(OPTIONAL)

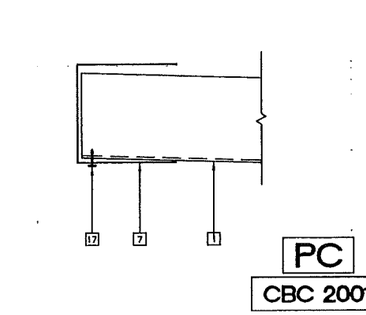

PC
CBC 2001

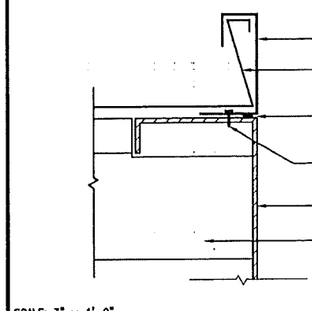

SCALE: 3" = 1'-0"

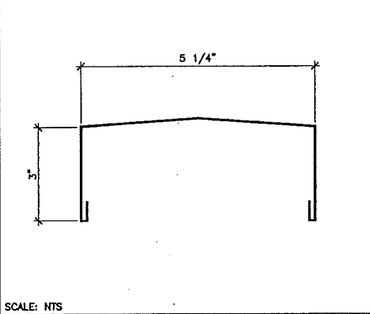

SCALE: NTS

	20	ROOF CAP AT 4" SEPARATION	16	ROOF FLASHING AT HIGH SIDE	12	STARTER ROOF PAN CONNECTION	8	ROOF CAP AT MODLINE	4

KEY NOTES

1. 22 GA STANDING SEAM ROOF PAN – 1/A3.13
2. 22 GA ROOF CLIP (AT EACH PURLIN) – 2/A3.13
3. 22 GA STARTER/END ROOF CLIP – 3/A3.13
4. 26 GA ROOF CAP AT MODLINE – 4/A3.13
5. 26 GA CONTINUOUS GUTTER – 5/A3.13
6. 26 GA GALVANIZED IRON FLASHING AT SIDEWALL – 6/A3.13
7. 26 GA GALVANIZED IRON FLASHING AT HIGH END OF ROOF – 7/A3.13
8. DOWNSPOUT
9. DOWNSPOUT BRACKET TYPICAL (3) PLACES, TOP, BOTTOM AND MIDSPAN – ATTACH TO SIDING W/(2) #10 STSMS AND DOWNSPOUT W/(2) #10 STSMS.
10. 1 1/2"x1 1/2"x22 GA ANGLE GUTTER STRAP @ 24" O.C.
11. ROOF BEAM (STR)
12. ROOF PURLIN (STR)
13. COLUMN (STR)
14. (2) BEAM 144.0175 KNURLED DRIVE PINS – ROOF CLIP TO EACH PURLIN, TO ROOF BEAM AND TO HEADER. (PURLINS AT 4' OC)
15. #10 STSMS WITH NEOPRENE WASHERS EACH SIDE
16. TYPICAL EXTERIOR FINISH (FIN)
17. #10 STSMS WITH NEOPRENE WASHER – FLASHING TO ROOF PAN AT EACH SEAM
18. #10 STSMS WITH NEOPRENE WASHERS AT 36" OC MAX, STAGGERED ON THE WET SIDE OF SEALANT
19. #10 STSMS – GUTTER TO ROOF PAN AT EACH SEAM
20. #10 STSMS WITH NEOPRENE WASHER – GUTTTER STRAP TO RIB OF ROOF PAN & GUTTER
21. CONTINUOUS BEAD OF SEALANT AT MODLINE JOINT
22. 1/4" CONTINUOUS BEAD OF SEALANT AROUND ENTIRE PERIMETER OF FRAME
23. 1/4" OF SEALANT ALONG ENTIRE LENGTH OF BOTH MODLINE RIBS AND ENDS.
24. MODLINE (M)

IDENTIFICATION STAMP
DIV. OF THE STATE ARCHITECT
OFFICE OF REGULATION SERVICES
04 105337
AC FLS SS
DATE JUN 05 2003

FILE PATH: 2440-A3.13.DWG

PROJECT NO.4562

PC- 04-104801

REVISIONS

1			
2			
3			
4			
5			

Electrical Engineer's Seal

Mechanical Engineer's Seal

PC Professional of Record Seal
REGISTERED PROFESSIONAL ENGINEER
JAMES T. SIMPSON
No. 41002
STRUCTURAL
STATE OF CALIFORNIA
LICENSE EXPIRES 6-30-2004

Architects Seal

IDENTIFICATION STAMP
DIV. OF THE STATE ARCHITECT
OFFICE OF REGULATION SERVICES
PC-04
104801
AC FLS SS
DATE 5/1/03

MODTECH INC.
2830 BARRETT AVENUE
PERRIS, CALIF. 92571
PH (909) 943-4014
FAX (909) 940-0427

PROJECT NUMBER: 4562

© MODTECH, INC. 2002

DRAWN BY: dt.
DATE: 6-02-03
CHECKED BY:
DATE:

MODTECH Index No.

ROOF PLAN 22 GA

A3.13

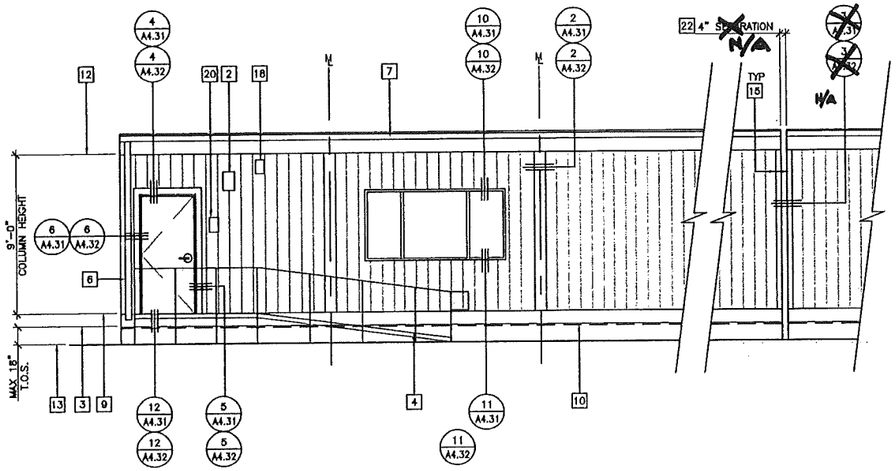

1 FRONT ELEVATION

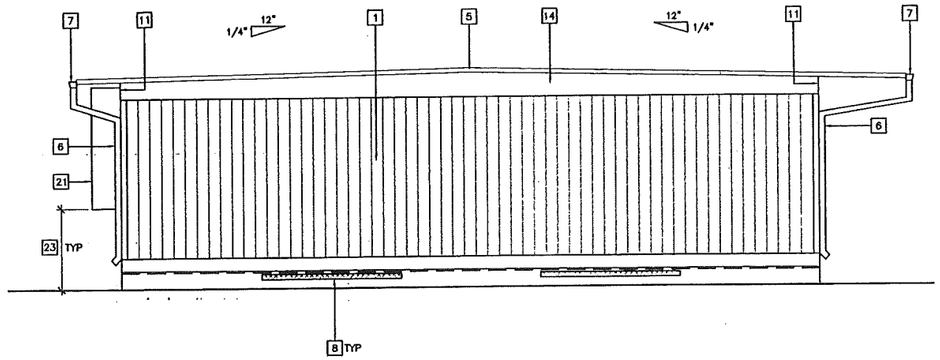

2 LEFT SIDE ELEVATION

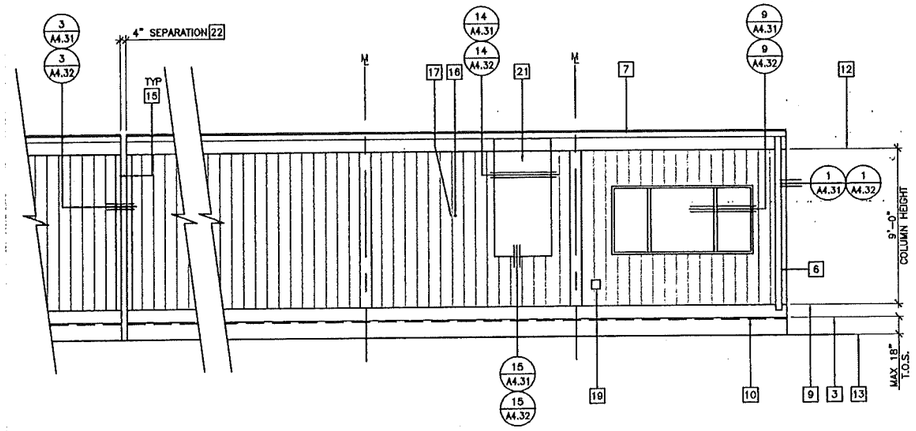

3 REAR ELEVATION

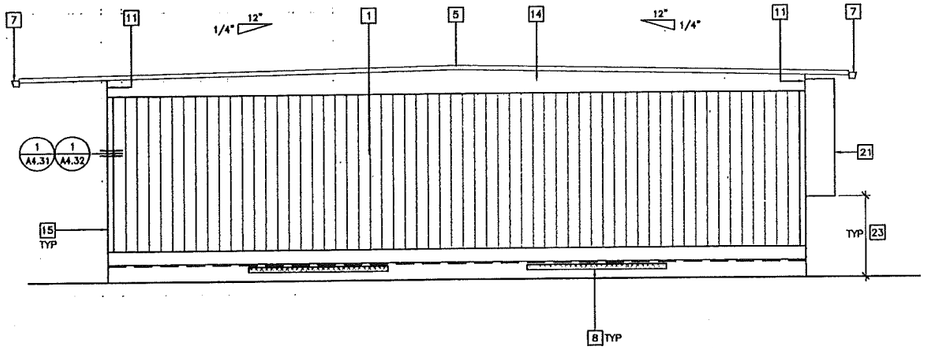

4 RIGHT SIDE ELEVATION

KEY NOTES

1. TYPICAL EXTERIOR FINISH (SEE EXTERIOR FINISH SCHEDULE BELOW)
2. EXTERIOR LIGHT FIXTURE (EL)
3. TOP OF SKIRTING (T.O.S.)
4. RAMP AND LANDING. SEE SHEETS R1 THRU R4 (RAMP)
5. RIDGE
6. DOWNSPOUT FASTEN TO BUILDING TYPICAL (3) PLACES
7. CONTINUOUS GUTTER WITH DOWNSPOUT (LOCATION OF DOWNSPOUT SHOWN ON ROOF PLAN – A2)
8. FOUNDATION VENT (SEE FOUNDATION PLAN – F1)
9. FINISH FLOOR LINE
10. FLOOR BEAM (STR)
11. ROOF HEADER (STR)
12. TOP OF COLUMN
13. FINISH GRADE
14. ROOF BEAM (STR)
15. COLUMN (STR)
16. ELECTRICAL STUB-OUT (EL)
17. GROUND STUB-OUT (EL)
18. J-BOX FOR EXTERIOR FIRE ALARM HORN (EL)
19. GUTTER BOX (EL)
20. SIGNAGE PROVIDED AND INSTALLED BY DISTRICT PRIOR TO OCCUPANCY. SEE SHEET A6.01
21. HVAC UNIT (HV)
22. ~~4" SEPARATION AS REQUIRED PER FLOOR PLAN~~ N/A
23. IF HVAC UNIT IS LOCATED IN ANY PATH OF TRAVEL OR CIRCULATION AREA AND HEIGHT FROM GRADE TO BOTTOM OF UNIT EXCEEDS 27" THEN PROTECTION MUST BE PROVIDED BY DISTRICT PRIOR TO OCCUPANCY

EXTERIOR FINISH SCHEDULE

NOTE: SEE SPECIFICATIONS FOR DETAILED DESCRIPTION OF FINISH OPTIONS.

STANDARD – 5/8" PLYWOOD SIDING

OPTIONAL – 5/16" GROOVED FIBER CEMENT BOARD

OPTIONAL – 5/16" FIBER CEMENT BOARD WITH TEXTURED ELASTOMERIC COATING SYSTEM

DATE SIGNED APR 30 2003

PC

CBC 2001

EXTERIOR ELEVATIONS

22 GA/DUAL PITCH

SCALE: 1/4" = 1'-0"

IDENTIFICATION STAMP DIV. OF THE STATE ARCHITECT OFFICE OF REGULATION SERVICES 04 105337 JUN 05 2003

FILE PATH: 2440-A4.11.DWG

PROJECT NO. 4562

PC-04-104801

REVISIONS

1		
2		
3		
4		
5		

Electrical Engineer's Seal

Mechanical Engineer's Seal

PC Professional of Record Seal

REGISTERED PROFESSIONAL ENGINEER JAMES T. SIMPSON No. 3602 STRUCTURAL STATE OF CALIFORNIA

Architects Seal

IDENTIFICATION STAMP DIV. OF THE STATE ARCHITECT OFFICE OF REGULATION SERVICES PC-04 104801 AC FLS SS DATE 5/12/03

MODTECH INC.

2830 BARRETT AVENUE PERRIS, CALIF. 92571

PH (909) 943-4014 FAX (909) 940-0427

PROJECT NUMBER: 4562

© MODTECH, INC. 2002

DRAWN BY: dt. DATE: 6-02-03

CHECKED BY: DATE:

MODTECH Index No.

EXTERIOR ELEVATIONS 22 GA DUAL PITCH

A4.11

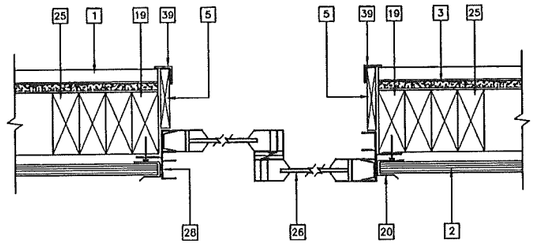

SCALE: 3"=1'-0"

WINDOWS SECTION AT JAMBS | 9

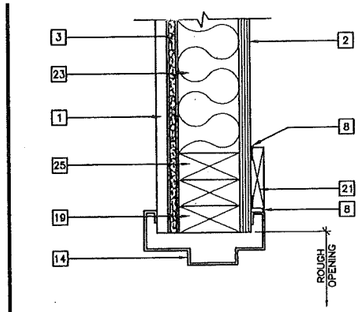

SCALE: 3"=1'-0"

EXTERIOR DOOR JAMB | 5

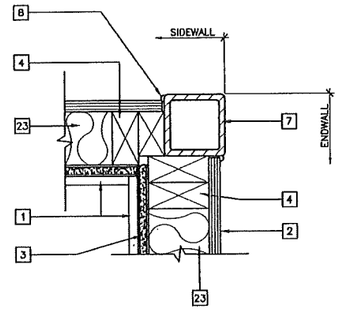

SCALE: 3"=1'-0"

COLUMN AT CORNER | 1

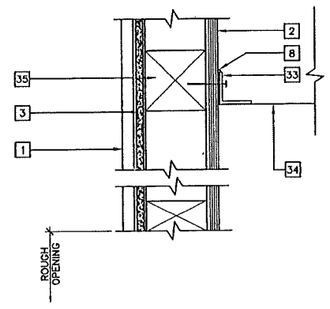

SCALE: 3"=1'-0"

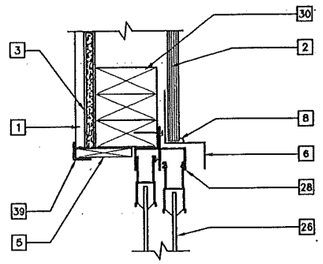

SCALE: 3"=1'-0"

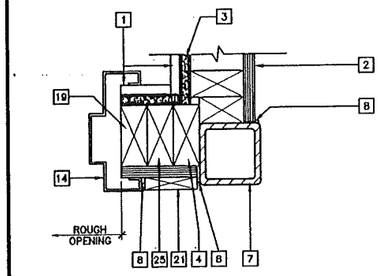

SCALE: 3"=1'-0"

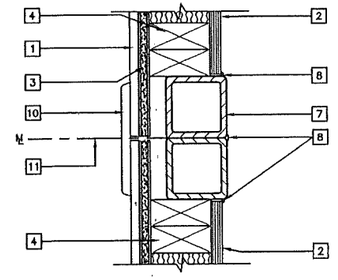

SCALE: 3"=1'-0"

HVAC MOUNT AT JAMBS | 13

WINDOW HEADER | 10

EXTERIOR DOOR JAMB | 6

COLUMN AT MODLINE | 2

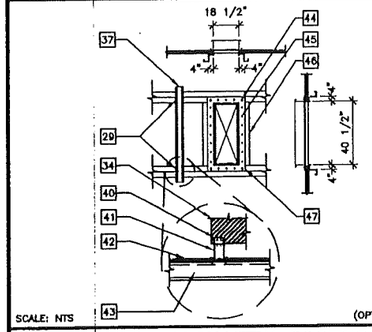

SCALE: NTS (OPTIONAL)

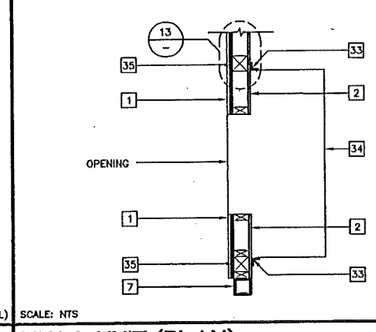

SCALE: NTS

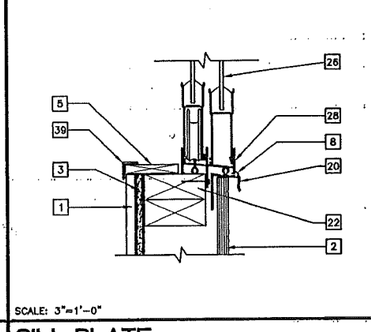

SCALE: 3"=1'-0"

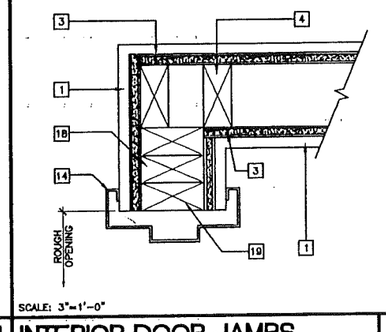

SCALE: 3"=1'-0"

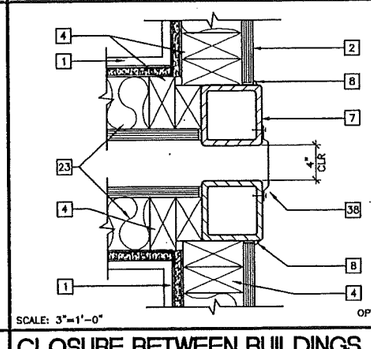

SCALE: 3"=1'-0" OPTIONAL

CURB ATTACHMENT ON METAL ROOFING | 18

HVAC UNIT (PLAN) | 14

SILL PLATE | 11

INTERIOR DOOR JAMBS | 7

CLOSURE BETWEEN BUILDINGS | 3

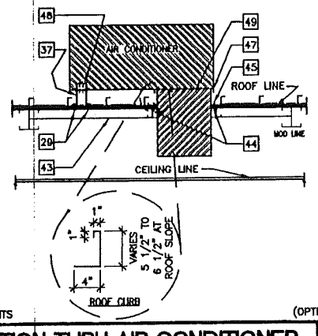

SCALE: NTS (OPTIONAL)

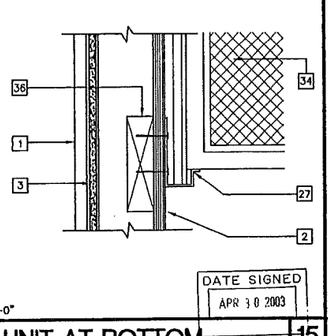

SCALE: 3"=1'-0"

DATE SIGNED APR 30 2003

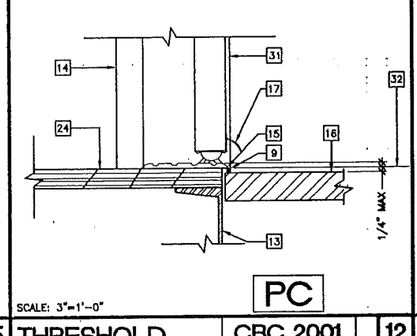

SCALE: 3"=1'-0"

PC

CBC 2001

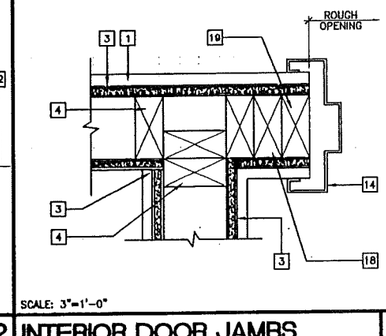

SCALE: 3"=1'-0"

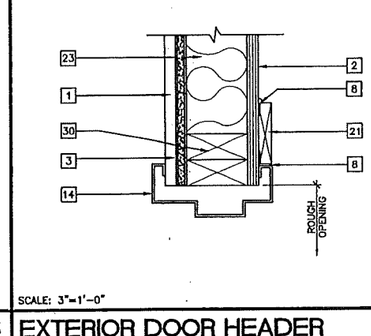

SCALE: 3"=1'-0"

SECTION THRU AIR CONDITIONER | 19

HVAC UNIT AT BOTTOM | 15

THRESHOLD | 12

INTERIOR DOOR JAMBS | 8

EXTERIOR DOOR HEADER | 4

KEY NOTES

1. TYPICAL INTERIOR FINISH (FIN) – 1/A6.02
2. TYPICAL EXTERIOR FINISH (SEE EXTERIOR ELEVATIONS)
3. 1/2" GYPSUM BOARD BACKING WITH 7d COOLER NAILS AT MAX 7" OC TYPICAL AT EACH STUD
4. 2"x4" STUD TYPICAL
5. INTERIOR WOOD TRIM
6. 26 GA DRIP FLASHING
7. STEEL COLUMN (STR)
8. SEALANT (TYPICAL, SEE SPECS.)
9. CAULKING
10. CLOSURE
11. MODLINE (M)
12. NOT USED
13. FLOOR BEAM (STR)
14. PRESSED STEEL FRAME – 1,4/A6.01
15. ALUMINUM THRESHOLD – 1/4" WITH 2:1 BEVEL – 7/A6.01
16. FINISH LANDING
17. DOOR BOTTOM – 7/A6.01
18. (2) 2"x4" KING STUD
19. 2"x4" TRIMMER STUD
20. 26 GA 'J' MOLD
21. 1"x4" WOOD TRIM WITH 8d ELECTRO GALVANIZED AT 12" OC
22. SILL PLATE
23. INSULATION (SEE SPECS. FOR SIZE AND TYPE)
24. FINISH FLOORING – 1/A6.02
25. 2"x4" FULL HEIGHT JAMB STUDS
26. WINDOW GLAZING – 1/A6.01
27. HVAC UNIT BOTTOM SEAT 12 GAx24" LONG WITH (6) 3/8" DIAx2" LAG BOLTS
28. ALUMINUM NAIL ON WINDOW FRAME. INSTALL WITH 8d BOX ELECTRO GALVANIZED NAILS AT 24" OC MAXIMUM WITH MINIMUM 3" BUILDING PAPER BETWEEN FRAME AND WALL.
29. #14 x2" SMS INTO PURLIN (TYP 4 PLACES)
30. DOOR HEADER
31. DOOR – 4/A6.01
32. FINISHED FLOOR LINE
33. HVAC SIDE BRACKET (FURNISHED WITH UNIT) ATTACH TO WALL WITH 3/8"x2" LAG SCREWS
34. HVAC UNIT (HV)
35. 4"x4" POST OR ALTERNATE – (2) 2"x4" FULL HEIGHT STUDS WITH 1/2" PLYWOOD SPACER STITCH NAILED WITH 16d AT 12" OC STAGGERED
36. 2"x6" LET-IN
37. 18 GA GALVANIZED IRON HAT
38. CLOSURE SCREEN
39. CORNER MOLDING
40. 18 GA x2" WIDE ANGLE WITH 2–#10 SMS EACH LEG
41. 18 GA x2" WIDE 5 1/2" DEEP 5' LONG RUNNER
42. 3/4" PLYWOOD SHEATHING
43. 14 GA x2" ROOF PURLIN AT 48" OC
44. #14 x2" SMS THRU ROOF CURBS INTO PURLIN (TYP 4 PLACES)
45. #8x3/4" SMS AT 5" OC MIN
46. ROOF PURLIN
47. 24 GA ROOF CURB SECURE TO ROOF
48. 18 GA x2" W/ANGLES SECURE TO A/C UNIT W/2 #10 SMS SECURE TO UNIT W/1 #14 SMS (TYP 2 PLACES)
49. #10 x3/4" SMS (TYP 4 PLACES)

IDENTIFICATION STAMP DIV. OF THE STATE ARCHITECT OFFICE OF REGULATION SERVICES
04 105337 FLS SS
DATE JUN 05 2003

FILE PATH: 2440-A4.31.DWG

PROJECT NO. 4562

PC-04-104801

REVISIONS

1			
2			
3			
4			
5			

Electrical Engineer's Seal

Mechanical Engineer's Seal

PC Professional of Record Seal
REGISTERED PROFESSIONAL ENGINEER CHARLES T. STAGGS STRUCTURAL STATE OF CALIFORNIA
No. 36602
LICENSE EXPIRES 6-30-2004

Architects Seal

IDENTIFICATION STAMP DIV. OF THE STATE ARCHITECT OFFICE OF REGULATION SERVICES
PC-04 104801
AC FLS SS
DATE 5/1/03

MODTECH™ INC.
2830 BARRETT AVENUE
PERRIS, CALIF. 92571
PH (909) 943-4014
FAX (909) 940-0427

PROJECT NUMBER: 4562

© MODTECH, INC. 2002

DRAWN BY: dt.
DATE: 6-02-03
CHECKED BY:
DATE:

MODTECH Index No.

ARCHITECTURAL DETAILS WOOD STUDS

A4.31

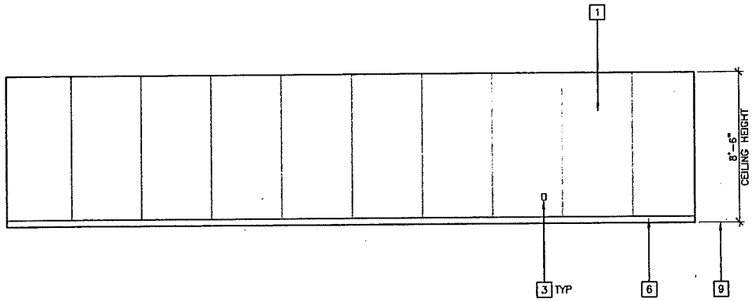

① LEFT SIDE ELEVATION

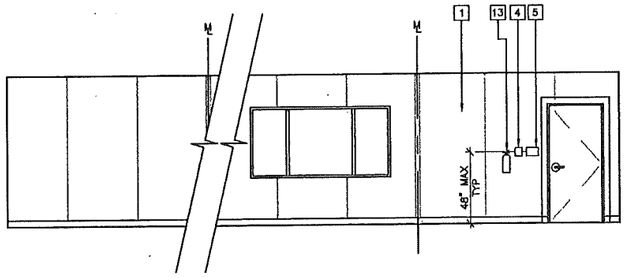

② FRONT ELEVATION

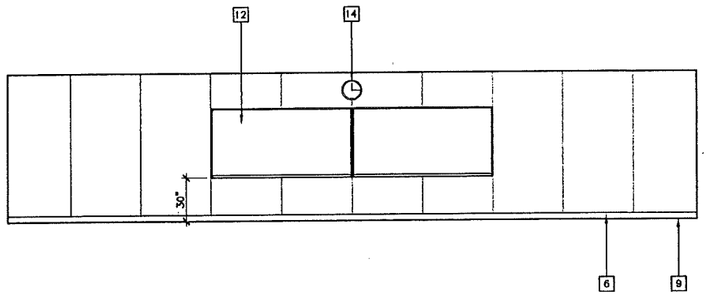

③ RIGHT SIDE ELEVATION

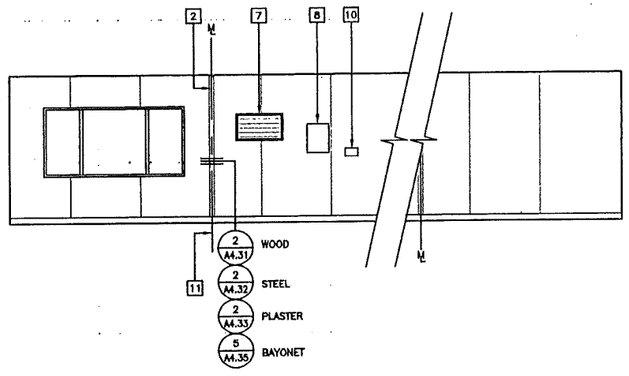

④ REAR ELEVATION

KEY NOTES

1. TYPICAL INTERIOR FINISH (FIN)
2. CLOSURE AT MODULAR JOINT
3. DUPLEX WALL RECEPTACLE (EL) 48" AFF
4. J-BOX FOR FIRE ALARM PULL STATION (EL) 48" AFF
5. LIGHT SWITCH (EL) 48" AFF
6. BASE
7. RETURN AIR GRILL
8. ELECTRICAL PANEL (EL)
9. FINISH FLOOR LINE (FIN)
10. THERMOSTAT (HV) 48" AFF
11. MODULAR JOINT
12. 2- 8'X4' MARKER BOARDS (SEE SPECIFICATIONS FOR TYPE)
13. FIRE EXTINGUISHER: 5 LBS DRY CHEMICAL WITH 2A-10BC UL RATING ON WALL MOUNTED BRACKET, HANDLE AT 48" AFF
14. ELECTRIC CLOCK (EL)

DATE SIGNED APR 30 2003

PC

CBC 2001

INTERIOR ELEVATIONS

SCALE: 1/4" = 1'-0"

IDENTIFICATION STAMP DIV. OF THE STATE ARCHITECT OFFICE OF REGULATION SERVICES 04 105337 DATE JUN 05 2003

FILE PATH: 2440-A5.01.DWG

PROJECT NO. 4562

PC-04-104801

REVISIONS	Electrical Engineer's Seal	Mechanical Engineer's Seal	PC Professional of Record Seal	Architects Seal	IDENTIFICATION STAMP DIV. OF THE STATE ARCHITECT OFFICE OF REGULATION SERVICES
1			REGISTERED PROFESSIONAL ENGINEER JAMES T. SIMPSON No. 2802 STRUCTURAL STATE OF CALIFORNIA LICENSE EXPIRES 6-30-2004		PC-04 104801 AC FLS SS DATE 5/2/03
2					
3					
4					
5					

MODTECH™ INC.
2830 BARRETT AVENUE
PERRIS, CALIF. 92571
PH (909) 943-4014
FAX (909) 940-0427

PROJECT NUMBER: 4562

© MODTECH, INC. 2002

DRAWN BY: dt.
DATE: 6-02-03
CHECKED BY:
DATE:

MODTECH Index No.
A5.01

INTERIOR ELEVATIONS

HARDWARE SET #1 (EXTERIOR)

LOCKSET	–	SCHLAGE D70PD, RHODES LEVER, OR EQUAL
BUTTS	–	1 1/2" PAIR HAGER BB1191 4 1/2"x4 1/2" NRP 26D OR EQUAL.
CLOSER	–	NORTON 8501 BFDP OR EQUAL.
THRESHOLD	–	PEMCO 271A OR EQUAL.
DOOR BOTTOM	–	PEMCO 216AV OR EQUAL.
WEATHER-STRIP	–	PEMCO 299AV OR EQUAL.

HARDWARE SET #2 (INTERIOR PASSAGE)

LOCKSET	–	SCHLAGE D10S WITH RHODES LEVER, OR EQUAL
BUTTS	–	1 1/2" PAIR HAGER BB1279 4 1/2"x4 1/2" OR EQUAL.

HARDWARE SET #3 (EXTERIOR)

LOCKSET	–	SCHLAGE D70PD, WITH RHODES LEVER OR EQUAL
BUTTS	–	1 1/2" PAIR HAGER BB1191 4 1/2"x4 1/2" NRP 26D OR EQUAL.
STOP	–	RIXON 9 SERIES STEEL DOOR STOP
THRESHOLD	–	PEMCO 271A OR EQUAL
DOOR BOTTOM	–	216AV OR EQUAL
WEATHER STRIP	–	PEMCO 299V OR EQUAL

HARDWARE SET #4 (INTERIOR DOUBLE LOCKABLE)

LOCKSET	–	SCHLAGE D86PD, WITH RHODES LEVER OR EQUAL
BUTTS	–	1 1/2" PAIR HAGER BB1279 4 1/2"x4 1/2" 26D OR EQUAL.

HARDWARE SET #5 (INTERIOR TOILET ROOM/PRIVACY)

LOCKSET	–	SCHLAGE D40S WITH RHODES LEVER OR EQUAL
BUTTS	–	1 1/2" PAIR HAGER BB1279 4 1/2"x4 1/2" 26D OR EQUAL.

HARDWARE SET #6 (INTERIOR STOREROOM)

LOCKSET	–	SCHLAGE D80PD WITH RHODES LEVER OR EQUAL
BUTTS	–	1 1/2" PAIR HAGER BB1279 4 1/2"x4 1/2" 26D OR EQUAL.

HARDWARE SET #7 (PANIC)

LOCKSET	–	VON DUPRIN 99L PANIC HARDWARE WITH TRIM OR EQUAL
BUTTS	–	1 1/2" PAIR HAGER BB1191 4 1/2"x4 1/2" NRP 26D OR EQUAL.
CLOSER	–	NORTON 8501 BFDP OR EQUAL.
THRESHOLD	–	PEMCO 271A OR EQUAL.
DOOR BOTTOM	–	PEMCO 216AV OR EQUAL.
WEATHER-STRIP	–	PEMCO 299AV OR EQUAL.
DOOR PULL	–	TO BE DETERMINED...

HARDWARE SET #8 (EXTERIOR)

LOCKSET	–	SCHLAGE D70PD WITH RHODES LEVER OR EQUAL
BUTTS	–	1 1/2" PAIR HAGER BB1191 4 1/2"x4 1/2" NRP 26D OR EQUAL.
THRESHOLD	–	PEMCO 271A OR EQUAL
DOOR BOTTOM	–	PEMCO 216AV OR EQUAL
WEATHER-STRIP	–	PEMCO 299AV OR EQUAL

NO CLOSER PERMITTED

NOTE: PANIC HARDWARE IS REQUIRED TO BE INSTALLED WHEN THE CONFIGURATION OF ANY ROOM PROVIDES AN OCCUPANT LOAD OF 50 OR GREATER CBC 1007.3.10

HARDWARE SCHEDULE | 7

DATE SIGNED
APR 10 2003

DOOR NUMBER	DOOR TYPE	QUANTITY	FRAME OPENING WIDTH	FRAME OPENING HEIGHT	DOOR MATERIAL	FIRE RATING	HARDWARE SET NO.	FRAME MATERIAL	JAMB THROAT	REMARKS
1	A		3'-0"	6'-8"	HM		1	HM	5-1/8"	

AL – ALUMINUM
HC – HOLLOW CORE WOOD
HM – HOLLOW METAL – PRESSED STEEL KD TYPE
HMW – HOLLOW METAL WELDED
SC – SOLID CORE WOOD
SCL – SOLID CORE WOOD LEGACY
SST – STAINLESS STEEL
STL – STEEL FRAME, 16 GA FULLY WELDED, GALV AT EXTERIOR, REPUBLIC "ME" SERIES. PAINT TO MATCH TRIM.
WWF – WINDOW WALL FRAME

DOOR SCHEDULE | 4

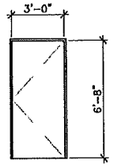

TYPE A

DOOR NOTES

1. DOOR HANDLES FOR LOCKSETS AND PANIC HARDWARE TO BE CENTERED AT 40" AFF & DEAD BOLTS AT 44" AFF. HARDWARE TO BE OPENABLE FROM THE INSIDE WITHOUT ANY SPECIAL KNOWLEDGE OR EFFORT LEVERS TO RETURN TO WITHIN 1/2" OF DOOR.
2. ALL DOORS SHALL BE 1 3/4" THICK UON DOUBLE LETTERS IN SCHEDULE, INDICATES A PAIR OF DOORS.
3. CLOSURE SHALL BE SET FOR MAXIMUM OPENING PRESSURE OF 5.0 LBS AT EXTERIOR DOORS AND 5.0 LBS AT INTERIOR DOORS.
4. PLACE SIGN OVER EXIT DOORS: "THESE DOORS TO REMAIN UNLOCKED DURING BUSINESS HOURS"
5. SIGNAGE IS NOT IN MODTECH CONTRACT

DOOR ELEVATIONS | 5

ACCESSIBILITY SIGNAGE (BY DISTRICT) | 6

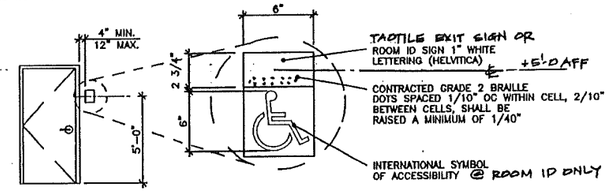

ENTRY DOOR FROM EXTERIOR VIEW
(TACTILE SIGN @ INTERIOR ONLY)

"EXIT SIGN": LITHONIA LIGHTING MODEL 'QUANTUM LOM EL N' OR EQUAL.

PC
CBC 2001

SEE FLOOR PLAN FOR LOCATION AND ARROW DIRECTION

WINDOW NUMBER	QUANTITY	FRAME OPENING WIDTH	FRAME OPENING HEIGHT	FINISH	REMARKS
A		8'-0"	4'-0"	1	SEE NOTES #1 & 2

WINDOW SCHEDULE | 1

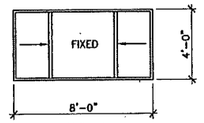

TYPE A

WINDOW NOTES

1. ALUMINUM GLAZING, 7/32" MIN. TEMPERED GLASS OF SOLAR GRAY WITH A LIGHT TRANSMISSION FACTOR OF 46%, ALL OPERABLE SASH SHALL HAVE SCREENS.
2. DUAL PANE.

WINDOW FINISH OPTIONS

1. CLEAR ANODIZED
2. BRONZE ANODIZED
3. PAINTED

WINDOW ELEVATIONS | 2

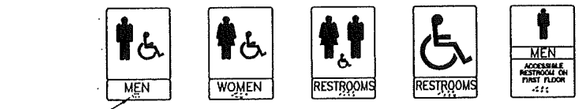

CORRESPONDING GRADE II BRAILLE TYPICAL

WALL-SIGNAGE (TYP)

RAISED IMAGE 1/32" AND CENTERED ON SIGN

1/4" THICK, TYP

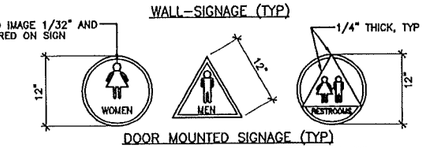

DOOR MOUNTED SIGNAGE (TYP)

NOTE: PICTOGRAMS AND/OR LETTERING ARE NOT REQUIRED ON DOOR-MOUNTED SIGNAGE. ALL CIRCLES AND TRIANGLES ARE 1/4" THICK.

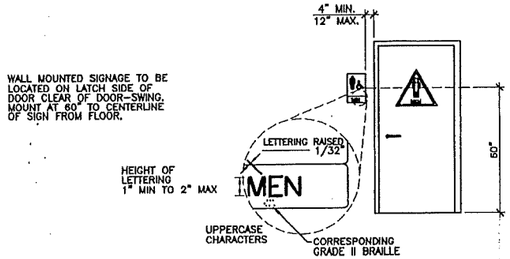

IDENTIFICATION SYMBOLS FOR SANITARY FACILITIES

INTERNATIONAL SYMBOL OF ACCESS (WHEEL CHAIR SYMBOL) REQUIRED DOOR OR AT STRIKE SIDE ROOM IDENTIFICATION

IDENTIFICATION STAMP
DIV. OF THE STATE ARCHITECT
OFFICE OF REGULATION SERVICES
04 105337
FLS
DATE JUN 06 2003

TOILET ROOM SIGNAGE (BY DISTRICT) | 3

REVISIONS

1			
2			
3			
4			
5			

Electrical Engineer's Seal

Mechanical Engineer's Seal

PC Professional of Record Seal
REGISTERED PROFESSIONAL ENGINEER JAMES T. SIMPSON No. 28602 STRUCTURAL STATE OF CALIFORNIA
LICENSE EXPIRES 6-30-2004

Architects Seal

IDENTIFICATION STAMP
DIV. OF THE STATE ARCHITECT
OFFICE OF REGULATION SERVICES
PC-04
104801
AC
FLS
DATE 6/4/03

MODTECH™ INC.
2830 BARRETT AVENUE PH (909) 943-4014
PERRIS, CALIF. 92571 FAX (909) 940-0427

PROJECT NUMBER: 4562

© MODTECH, INC. 2002

DRAWN BY: dl.
DATE: 6-02-03
CHECKED BY:
DATE:

MODTECH Index No.

SCHEDULES

A6.01

PC- 04-104801 PROJECT NO. 4562

FILE PATH: 2440-A6.01.DWG

ROOM FINISH SCHEDULE

ROOM NUMBER	ROOM NAME	FINISHES: FLOOR	BASE	WALLS: NORTH	EAST	SOUTH	WEST	CEILING	CEILING HEIGHT	REMARKS
101	CLASSROOM	A	D	G	G	G	G	Q	8'-6"	

A – CARPET PER STATE OF CALIF SPEC COMPLYING WITH GROUP 1, TYPE A OR TYPE B, CLASS 2, DENSITY 4600, DIRECT GLUE DOWN.
B – VINYL SHEET FLOORING
C – VCT. ARMSTRONG STANDARD OR EXCELON OR EQUAL
D – TOP SET BASE – 4"
E – TOP SET BASE – 6"
F – SELF COVE BASE – 6"
G – 1/2" VINYL TACKBOARD CLASS 1 OVER 1/2" GYP BOARD BACKING. FLAME SPREAD NOT TO EXCEED 65. SMOKE DENSITY RATING 175
H – 1/8" MARLITE OVER 1/2" GYP BOARD OR 3/8" MARLITE FLAME SPREAD CLASS 3
J – 1/2" WR GYP BOARD, TAPE, TEXTURE, PAINTED FINISH
K – 3/8" WR GYP BOARD, TAPE, TEXTURE, PAINTED FINISH
L – 1/2" GYP BOARD, TAPE, TEXTURE, PAINTED FINISH
M – 3/8" GYP BOARD, TAPE, TEXTURE, PAINTED FINISH
N – 3/32" FRP OVER 1/2" WR GYP BOARD. CLASS "A" FLAMESPREAD NOT TO EXCEED 25. SMOKE DEVELOPED NOT TO EXCEED 450
P – NO FINISH
Q – ACOUSTICAL LAY IN GRID CEILING PANELS (SEE SPECIFICATIONS)
R – 1/2" GYP BD PANELS (PAINTED) IN CEILING GRID

FINISH NOTES

1. ALL FINISHES SHALL COMPLY WITH MODTECH'S SPECIFICATIONS AND WITH CBC CHAPTERS 3, 6, 7, 8 AND 10 AND CFC AND TITLE 19 CCR
2. PREPARATION FOR SUBFLOOR TO ACCEPT FINISH FLOORING IS BY FLOORING CONTRACTOR. PLYWOOD SUBFLOOR IS 2-4-1 PLYWOOD. OUTER PLYWOOD IS PLUGGED AND TOUCH SANDED. ANY DEFORMITIES DUE TO STANDARD CONSTRUCTION PRACTICES SHALL BE FILLED AND BY FLOORING CONTRACTOR. THE JOINT AT THE MODULE JOINING SHALL NOT BE LARGER THAN 1/8" AND SHALL BE FILLED AND SANDED BY FLOORING CONTRACTOR.

6 | 3

7 | 4 | ROOM FINISH SCHEDULE | 1

DATE SIGNED APR 30 2003

PC

CBC 2001

8 | 5 | 2

IDENTIFICATION STAMP DIV. OF THE STATE ARCHITECT OFFICE OF REGULATION SERVICES 04 105337 AC FLS SC DATE JUN 04 2003

REVISIONS
1
2
3
4
5

Electrical Engineer's Seal

Mechanical Engineer's Seal

PC Professional of Record Seal

REGISTERED PROFESSIONAL ENGINEER JAMES T. SIMPSON 3602 STRUCTURAL STATE OF CALIFORNIA
LICENSE EXPIRES 6-30-2004

Architects Seal

IDENTIFICATION STAMP DIV. OF THE STATE ARCHITECT OFFICE OF REGULATION SERVICES PC-04 104801 AC FLS SC DATE 5/14/03

MODTECH™ INC.
2830 BARRETT AVENUE PH (909) 943-4014
PERRIS, CALIF. 92571 FAX (909) 940-0427

PROJECT NUMBER: 4562

© MODTECH, INC. 2002

DRAWN BY: dt.
DATE: 6-02-03
CHECKED BY:
DATE:

MODTECH Index No.

SCHEDULES

A6.02

FILE PATH: 2440-A6.02.DWG

PROJECT NO. 4562

PC-04-104801

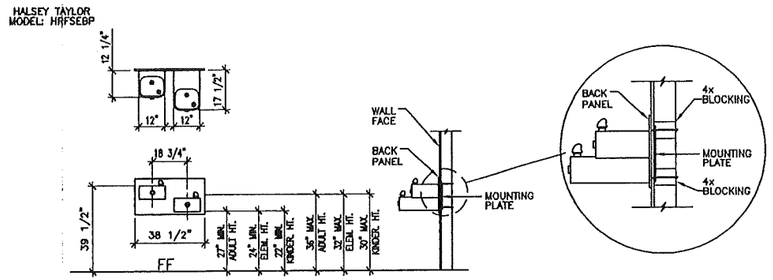

SCALE: 1/2"=1'-0"

DRINKING FOUNTAIN BLOCKING DETAIL | 14

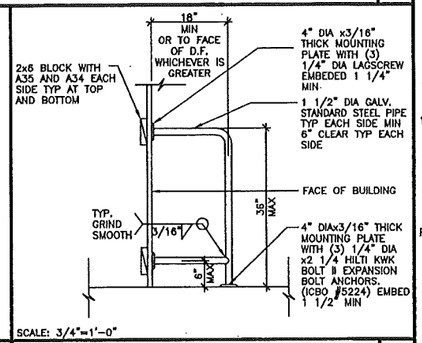

SCALE: 3/4"=1'-0"

| 19 | D.F. BARRIER RAIL | 15

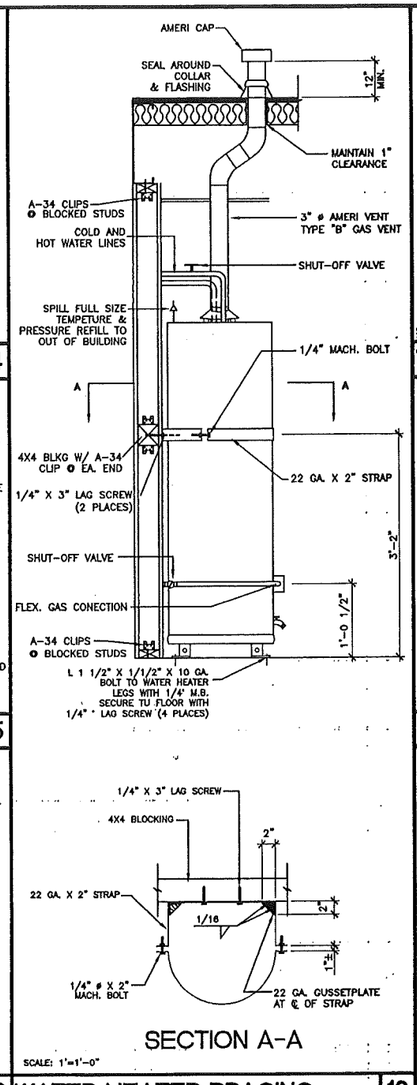

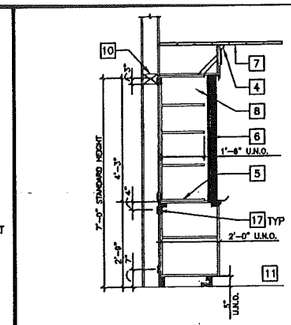

SCALE: N.T.S. (OPTIONAL)

TEACHING WALL SECTION | 6

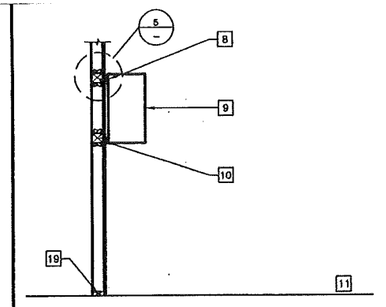

SCALE: NTS (OPTIONAL)

WALL HUNG CABINET ANCHORAGE | 2

KEY NOTES

1	A34 FRAMING CLIP (TYP)
2	2x4 STUDS AT 16" O.C. TYP
3	4x BLOCKING
4	PROJECTION SCREEN
5	MODULAR PLASTIC LAMINATE CABINET
6	SLIDING MARKER BOARDS
7	CEILING
8	#12 WOOD SCREWS MIN. 12" OC MIN 2 1/2" INTO 3x4 BLOCKING 2 SCREWS PER CABINET AT EACH BACKING LOCATIONS TYPICAL
9	WALL HUNG CASEWORK
10	ANCHORAGE: 4x4 BLOCKING WITH PAIR OF SIMPSON A34 FRAMING CLIPS EACH END OF EACH BLOCK VERIFY VERTICAL SPACING
11	FINISH FLOOR
12	4"x22 GA CONTINUOUS METAL STRAPS WITH #14 STSMS AT 24" OC
13	BACK SPLASH
14	BASE CABINET
15	TALL CASEWORK
16	TOP SET BASE
17	4"x 16 GA. METAL STRAP BRACING W(2) 16d EA STUD
18	INTERIOR FINISH (FIN)
19	BOTTOM PLATE

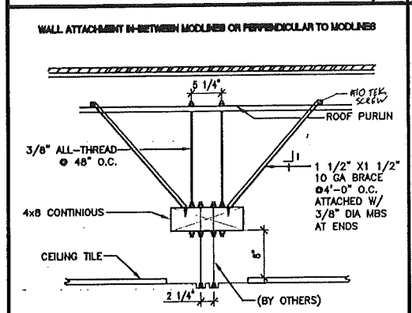

SCALE: NTS

OPERABLE WALL ATTACHMENT | 7

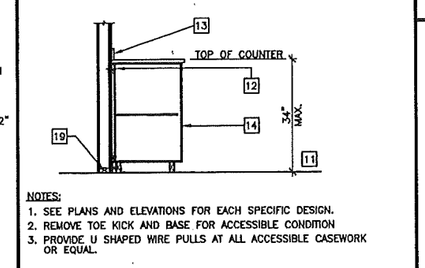

NOTES:
1. SEE PLANS AND ELEVATIONS FOR EACH SPECIFIC DESIGN.
2. REMOVE TOE KICK AND BASE FOR ACCESSIBLE CONDITION
3. PROVIDE U SHAPED WIRE PULLS AT ALL ACCESSIBLE CASEWORK OR EQUAL.

SCALE: NTS (OPTIONAL)

BASE CABINET ANCHORAGE | 3

TV MAX. WEIGHT= 100 LBS

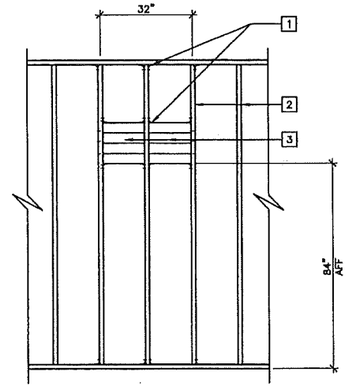

(ELEV. VIEW)

SCALE: 1/2"=1'-0"

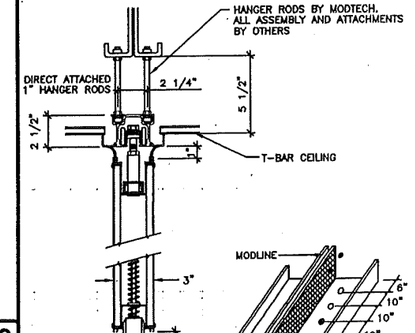

WALL ATTACHMENT AT MODLINES

SCALE: N.T.S.

OPERABLE WALL ATTACHMENT | 9

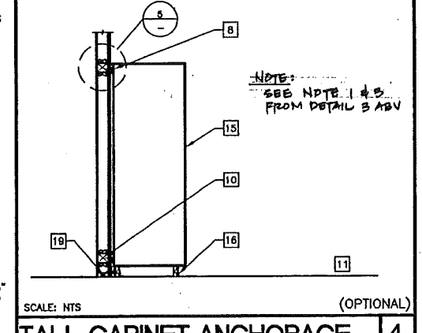

SCALE: NTS (OPTIONAL)

TALL CABINET ANCHORAGE | 4

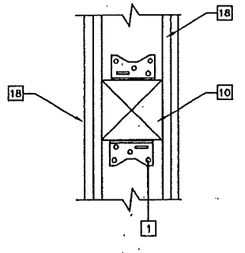

SCALE: 3"=1'-0"

BLOCKING DETAIL | 5

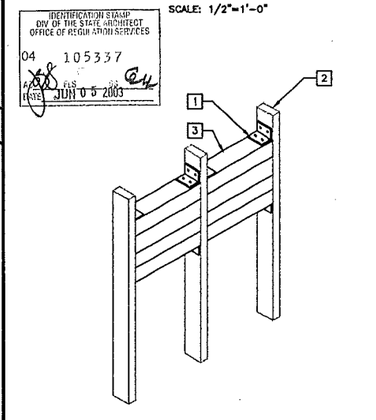

(ISO VIEW)

SCALE: N.T.S. (OPTIONAL)

TV BLOCKING DETAIL | 1

PC
CBC 2001

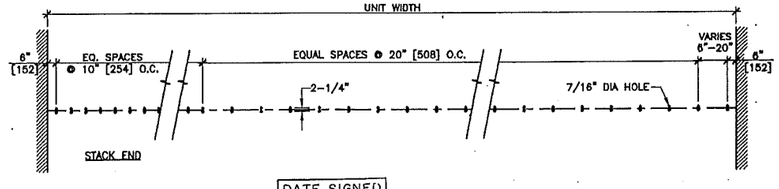

DATE SIGNED APR 3 0 2003

SCALE: N.T.S.

| 21 | OPERABLE WALL ATTACHMENT (HANGER ROD LAYOUT) | 13

SECTION A-A

SCALE: 1"=1'-0"

| 20 | | 16 | WATER HEATER BRACING | 12

REVISIONS			
1			
2			
3			
4			
5			

Electrical Engineer's Seal

Mechanical Engineer's Seal

PC Professional of Record Seal
REGISTERED PROFESSIONAL ENGINEER JAMES T. SIMPSON No. 24602 STRUCTURAL STATE OF CALIFORNIA
LICENSE EXPIRES 6-30-2004

Architects Seal

IDENTIFICATION STAMP DIV. OF THE STATE ARCHITECT OFFICE OF REGULATION SERVICES
PC-04
104801
AC. FLS IV SR
DATE 5/14/03

MODTECH INC.
2830 BARRETT AVENUE
PERRIS, CALIF. 92571
PH (909) 943-4014
FAX (909) 940-0427

PROJECT NUMBER: 4562

© MODTECH, INC. 2002

DRAWN BY: dt.
DATE: 6-02-03
CHECKED BY:
DATE:

MODTECH Index No.

MISCELLANEOUS OPTIONS

A7.01

PROJECT NO. 4562

PC-04-104801

FILE PATH: 2440-A7.01.DWG

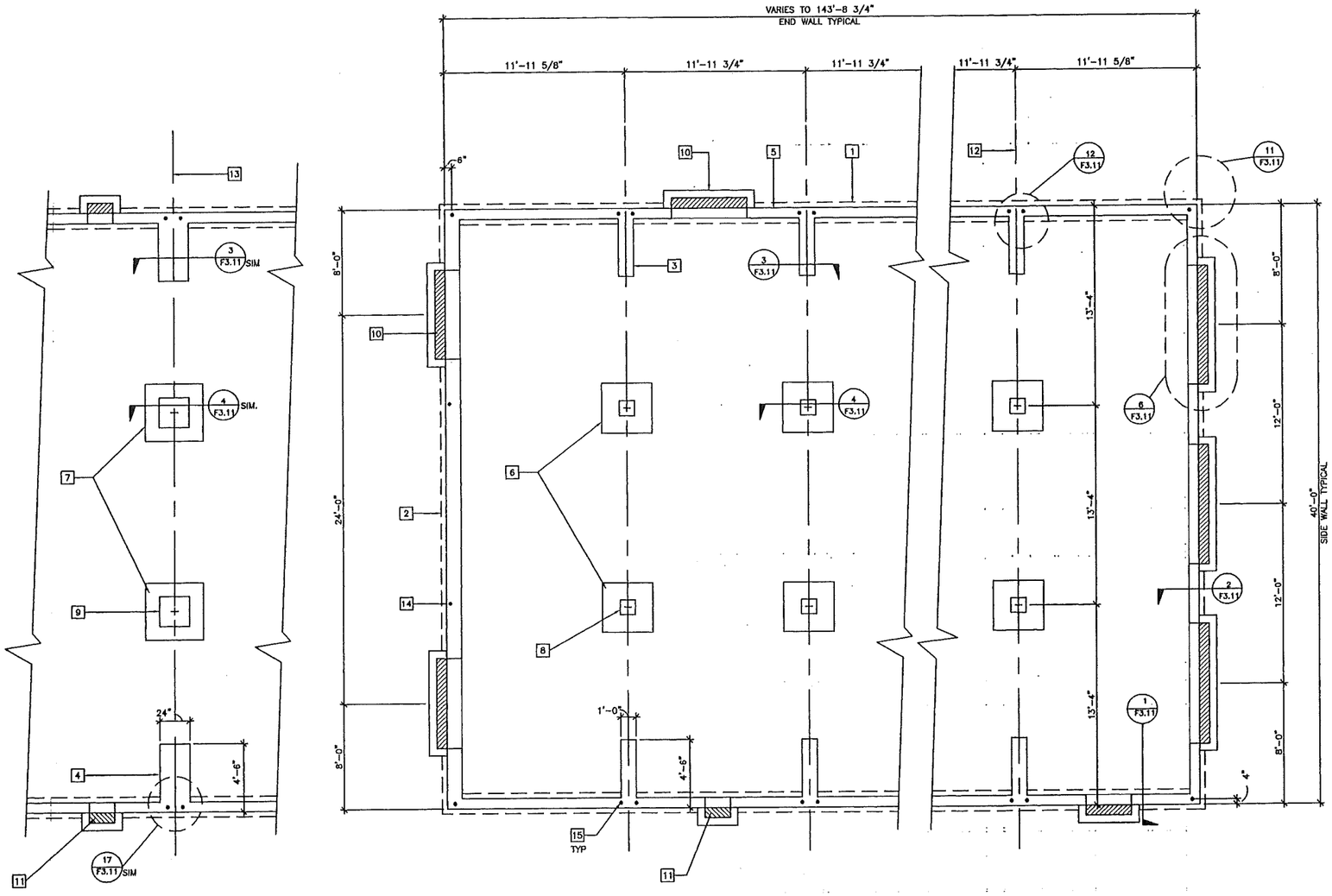

FOOTINGS AT ADJACENT BUILDING
(OPTIONAL 4" SEPARATION)

FOOTING SCHEDULE

DESIGN FLOOR LIVE LOAD	50 PSF	50+20 PSF	100 PSF	125 PSF
SIDEWALL	12"	12"	SEE SHEET F3.02	SEE SHEET F3.02
ENDWALL	17"/18"*	19"		
PAD	3'-4"/3'-5"* 3-#5 EW	4'-0"/3'-10"* 3-#5 EW		
PAD AT 4" SEPARATION	3'-9"/3'-9"* 3-#5 EW	4'-3"/4'-1"* 3-#5 EW		

* = VALUE FOR CONCRETE FLOOR

VENTING SCHEDULE (WOOD FLOORS ONLY)

BUILDING	(SF) AREA	(SF) VENTING REQUIRED	SIDE WALL VENTING	SIDE WALL VENT AREA	END WALL VENTING	END WALL VENT AREA	TOTAL VENT SUPPLIED
24'x40'	960	6.4	(5) A	7.8	–	–	7.8
36'x40'	1440	9.6	(4) B	9.6	–	–	9.6
48'x40'	1920	12.8	(6) B	14.4	–	–	14.4
60'x40'	2400	16	(4) C (2) B	12.92 4.8	–	–	17.7
72'x40'	2880	19.2	(6) C	19.38	–	–	19.4
84'x40'	3360	22.4	(6) C	19.38	(2) A (1) D	3.65	23.03
96'x40'	3840	25.6	(6) C	19.38	(4) A (1) D	6.6	25.9
108'x40'	4320	28.8	(6) C	19.38	(6) A (1) D	9.5	28.9
120'x40'	4800	32	(6) C	19.38	(9) A	31.1	32.52
132'x40'	5280	35.2	(6) C	19.38	(11) A	16.1	35.5
144'x40'	5760	38.4	(6) C	19.38	(13) A (1) D	24.49	39.09

	VENT	SIZE	AREA (SF)	GRATE SIZE
LEGEND	A	3'-9"x5"	1.56	4'x8"
	B	5'-9"x5"	2.40	6'x8"
	C	7'-9"x5"	3.23	8'x8"
	D	1'-9"x5"	0.73	2'x8"
ACCESS (OPTIONAL)	E	2'-9"x18"	4.13	3'x2'

NOTE: DELETE ALL UNDER FLOOR VENTS FOR CONCRETE FLOOR OPTION.

KEY NOTES

1. END WALL FOOTING – SEE FOOTING SCHEDULE
2. SIDE WALL FOOTING – SEE FOOTING SCHEDULE
3. INTERIOR RETURN FOOTING – SEE FOOTING SCHEDULE
4. MODLINE RETURN AT 4" SEPARATION – OPTIONAL
5. STEM WALL – 8" TYPICAL UON
6. MODLINE PAD
7. MODLINE PAD AT 4" SEPARATION – OPTIONAL
8. 12" DIA OR SQUARE PEDESTAL (TYPICAL AT MODLINE)
9. 19" DIA OR SQUARE PEDESTAL (TYPICAL AT 4" SEPARATION)
10. TYPICAL VENT
11. ADDITIONAL END WALL VENTS AS REQUIRED (20" MAXIMUM LENGTH) OR INCREASE VENT HEIGHT AS REQUIRED AT SIDEWALLS
12. MODLINE
13. 4" BUILDING SEPARATION AT ADJACENT BUILDING – OPTIONAL
14. ANCHOR BOLT AT SIDEWALL – 13'-4" OC FOR BUILDING SIZE 60'x40' OR LARGER
15. ANCHOR BOLT LOCATION – (1) AT EACH CORNER OF BUILDING AND (2) AT EACH MODLINE LOCATION

IDENTIFICATION STAMP
DIV. OF THE STATE ARCHITECT
OFFICE OF REGULATION SERVICES
04 105337
AC FLS SS 6W
DATE JUN 05 2003

NOTES

1. SOIL TYPE AND FOUNDATION
   A. BEARING: SOIL BEARING VALUE OF 1000 PSF USED FOR DESIGN.
   B. FOOTINGS: ALL FOOTINGS SHALL EXTEND 12 INCHES MINIMUM INTO NATIVE SOIL OR APPROVED ENGINEERED FILL.
2. CONCRETE
   ALL CONCRETE SHALL HAVE THE FOLLOWING MINIMUM STRENGTH AT 28 DAYS: FOOTINGS: f'_c = 3000 PSI (DESIGN BASED ON f'_c = 2000 PSI),
   CONCRETE SHALL CONFORM TO TITLE 24 SECTION 1905A.2.3 METHOD A OR B. ALL CEMENT SHALL BE TYPE 1 OR TYPE 11 PER ASTM C-150.
   METHOD "A" NON-DESIGNED MIX PER TABLE 19A-A-8.
   MINIMUM 7.1 SACKS PER YARD. WATER CONTENT SHALL NOT EXCEED 6 GALLONS PER SACK. AGGREGATE SHALL BE 3/4" TO 1"" MAXIMUM SIZE BUT NOT MORE THAN 3/4" OF MINIMUM CLEAR BAR SPACING.
   METHOD "B" PER SECTION 1905A.3.1,
   CONCRETE SUPPLIER SHALL PROVIDE CONCRETE MIX DESIGN AND A BREAK HISTORY OF 30 CONSECUTIVE BREAKS IDENTIFIED TO THAT MIX DESIGN. ALTERNATE – PROVIDE 15 CONSECUTIVE BREAKS IDENTIFIED TO THAT MIX DESIGN WITH A STANDARD DEVIATION CALCULATIONS.
   ANCHOR BOLTS, DOWELS, REINFORCING STEEL AND EMBEDDED ITEMS ARE TO BE SECURELY TIED IN PLACE BEFORE CONCRETE IS POURED.
3. REINFORCING STEEL GRADE 40.
   ALL REINFORCING STEEL SHALL BE BILLET STEEL PER ASTM A-615 WELDED REINFORCING STEEL SHALL CONFORM TO ASTM A-706, AND WELDED PER AWS D1.4-98
4. FOR FOOTINGS USING TRENCH FOR FORMING WIDTH SHALL BE INCREASED 2" EA. SIDE
5. THE ABOVE FOUNDATION PLAN HAS 1/4" ADDED AT EACH MOD LINE AND 1/8" AT EACH SIDE WALL AND DOES NOT MATCH THE FLOOR PLAN. THIS IS REQUIRED FOR GROWTH THAT IS EXPERIENCED WHEN SETTING MULTIPLE MODULE BUILDINGS.
6. MAX VENT LENGTH AT SIDE WALLS IS 8'-0"
   MAX VENT LENGTH AT END WALLS IS 4'-0"
   MIN DISTANCE FROM VENT TO EDGE OF MODULE IS 2'-0"
   MIN DISTANCE BETWEEN VENTS IS 2'-0"
7. FOR WELDED ANCHORAGE DELETE CANNOUTS. PROVIDE 1-ANCHOR PLATE AT EACH CORNER OF BUILDING AND 2-ANCHOR PLATES AT EACH MODLINE.

24X40 = 8	72X40 = 24
36X40 = 12	84X40 = 28
48X40 = 16	94X40 = 32
60X40 = 20	108X40 = 36

DATE SIGNED
APR 10 2003

PC
CBC 2001

FOUNDATION PLAN

BELOW GRADE CONCRETE
SCALE: 1/4" = 1'-0"

FILE PATH: 2440-F3.01.DWG

REVISIONS				
1				
2				
3				
4				
5				

Electrical Engineer's Seal

Mechanical Engineer's Seal

PC Professional of Record Seal
REGISTERED PROFESSIONAL ENGINEER
No. 3602
STRUCTURAL
STATE OF CALIFORNIA
LICENSE EXPIRES 6-30-2004

Architects Seal

IDENTIFICATION STAMP
DIV. OF THE STATE ARCHITECT
OFFICE OF REGULATION SERVICES
PC-04
104801
AC FLS SS NV
DATE 5/7/03

MODTECH INC.
2830 BARRETT AVENUE
PERRIS, CALIF. 92571
PH (909) 943-4014
FAX (909) 940-0427

PROJECT NUMBER: 4562

© MODTECH, INC. 2002

DRAWN BY: 6-02-03
DATE:
CHECKED BY:
DATE:

MODTECH Index No.
F3.01

PROJECT NO. 4562
PC-04-104801

FOUNDATION PLAN BGC – 50, 50+20 PSF

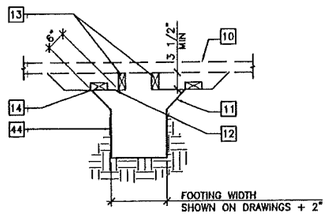

NOTES:
1. FOUNDATION CONCRETE MAY BE PLACED DIRECTLY INTO NEAT EXCAVATIONS PROVIDED THE FOUNDATION TRENCH WALLS ARE STABLE AS DETERMINED BY THE GEOTECHNICAL ENGINEER.
2. FOOTING WIDTHS SHALL NOT BE MORE THAN 4" WIDER THAN SHOWN ON PLAN.
3. FORMWORK NOT PERMITTED BELOW GRADE UNLESS FULLY FORMED.

SCALE: NTS

FOOTING FORMS - PERMANENT | 16

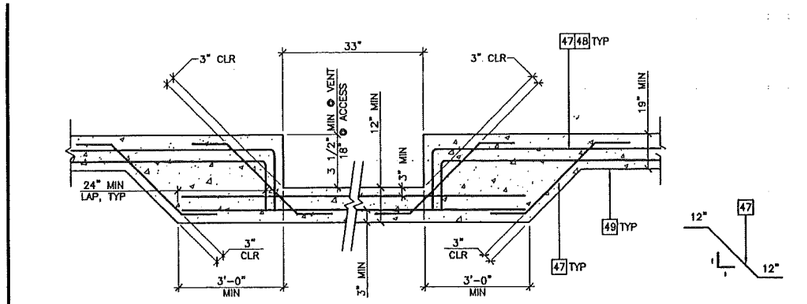

SCALE: 1/2"=1'-0"

ACCESS VENT ELEVATION | 9

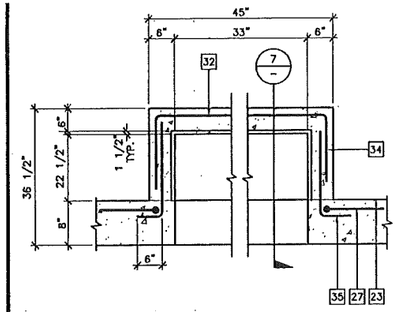

SCALE: NTS

ACCESS VENT | 5

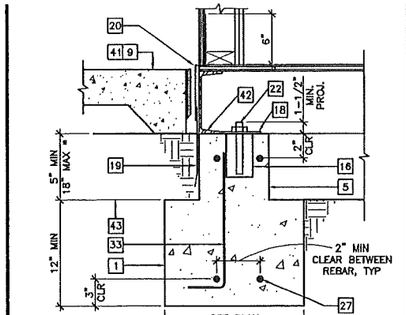

SCALE: 1 1/2"=1'-0"

TYPICAL ENDWALL FOOTING | 1

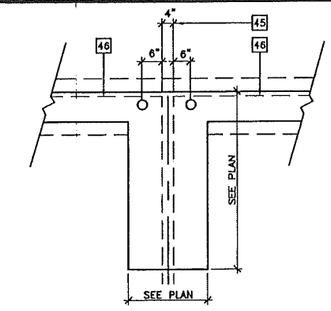

SCALE: NTS (OPTIONAL)

ANCHOR BOLT AT ADJACENT BLDG. | 17

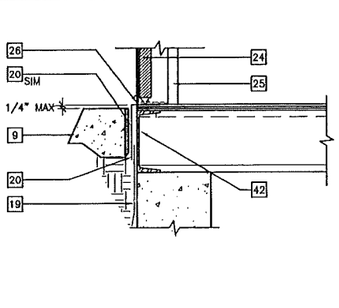

SCALE: 1 1/2"=1'-0"

THRESHOLD | 13

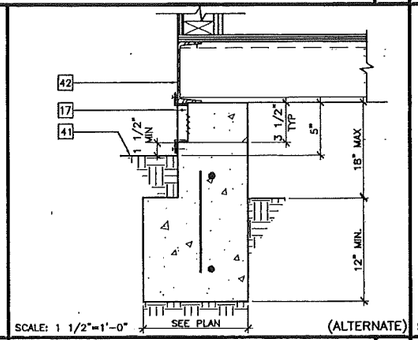

SCALE: 1 1/2"=1'-0" (ALTERNATE)

VENT AT ABOVE GRADE | 10

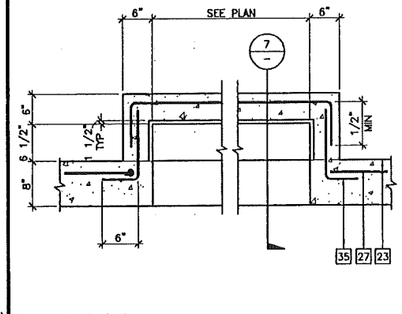

SCALE: 1 1/2"=1'-0"

TYPICAL VENT | 6

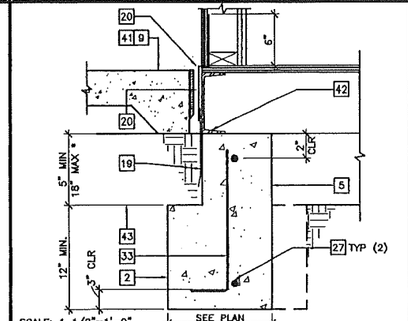

SCALE: 1 1/2"=1'-0"

TYPICAL SIDEWALL FOOTING | 2

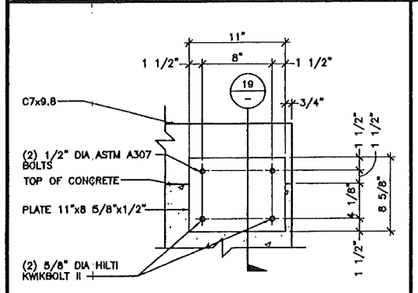

SCALE: 1 1/2"=1'-0" (OPTIONAL)

ALTERNATE FOUNDATION ANCHORAGE | 18

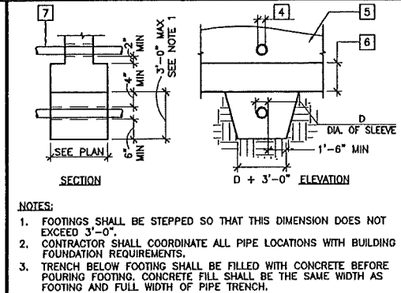

NOTES:
1. FOOTINGS SHALL BE STEPPED SO THAT THIS DIMENSION DOES NOT EXCEED 3'-0".
2. CONTRACTOR SHALL COORDINATE ALL PIPE LOCATIONS WITH BUILDING FOUNDATION REQUIREMENTS.
3. TRENCH BELOW FOOTING SHALL BE FILLED WITH CONCRETE BEFORE POURING FOOTING. CONCRETE FILL SHALL BE THE SAME WIDTH AS FOOTING AND FULL WIDTH OF PIPE TRENCH.
4. WHERE ELECTRICAL, CONDUIT OCCURS, NO SLEEVE IS REQUIRED.

SCALE: NTS

PIPES PERPENDICULAR TO FOOTINGS | 14

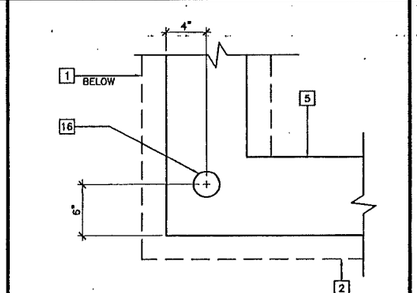

SCALE: 1 1/2"=1'-0"

ANCHOR BOLT AT CORNER | 11

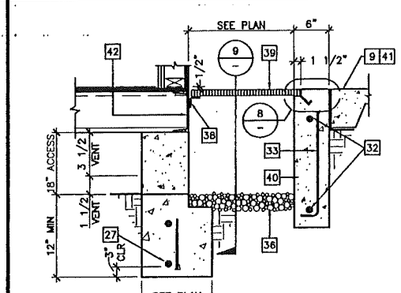

SCALE: NTS

ACCESS/VENT SECTION | 7

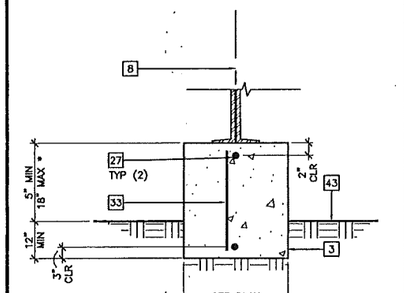

SCALE: NTS

INTERIOR RETURN FOOTING | 3

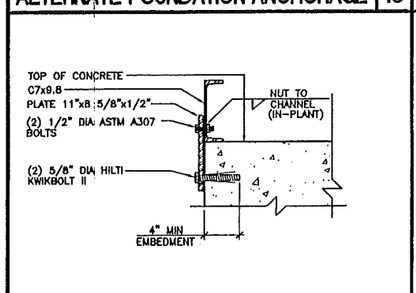

SCALE: 1 1/2"=1'-0" (OPTIONAL)

ALTERNATE FOUNDATION ANCHORAGE | 19

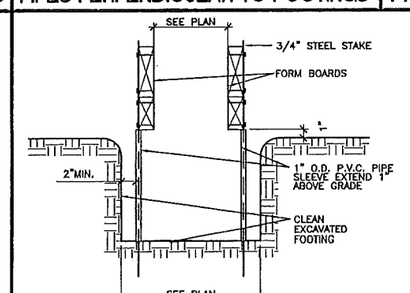

NOTE: USE STAKE PULLER TO REMOVE STEEL STAKES. DO NOT BANG TO LOOSEN.

SCALE: 1 1/2"=1'-0"

FOOTING FORMS - TEMPORARY | 15

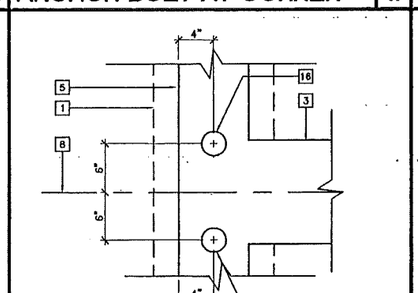

SCALE: 1 1/2"=1'-0"

ANCHOR BOLT AT MODLINE | 12

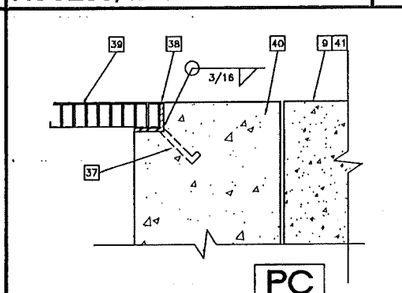

PC
CBC 2001

SCALE: NTS

GRATING SUPPORT | 8

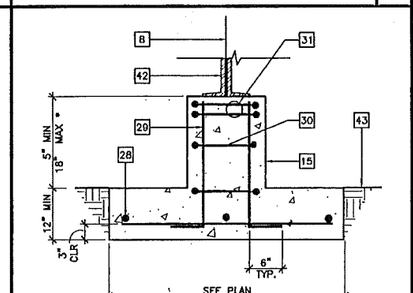

SCALE: NTS

INTERIOR PAD FOOTING | 4

KEY NOTES

1. END WALL FOOTING – SEE FOOTING SCHEDULE
2. SIDE WALL FOOTING – SEE FOOTING SCHEDULE
3. MODLINE RETURN FOOTING – SEE FOOTING SCHEDULE
4. SLEEVE DIAMETER 2" LARGER THAN PIPE DIAMETER
5. STEM WALL
6. FOOTING. FOR PIPES IN THIS AREA LOWER FOOTING SO PIPES PASS THROUGH STEM WALL.
7. PIPE THROUGH STEM WALL
8. MODLINE (M)
9. CONCRETE FLATWORK (BY DISTRICT)
10. STARTER WALL AFTER SET. CLEAN TO REMOVE LAITANCE AND SCUM.
11. CUT BACK SPALL
12. CONTINUOUS CLEAN-OUT. STAKES NOT PERMITTED WITHIN FOOTING AREA.
13. MINIMUM FORMWORK (UNLESS FULLY FORMED)
14. 2x PLANKING
15. CONCRETE INTERIOR PAD FOOTING – SEE FOUNDATION PLAN FOR SIZES
16. 3" DIAx8" DEEP CANOUT IN FOUNDATION (BY CONCRETE SUB-CONTRACTOR). AT TIME OF BUILDING INSTALLATION BACK FILL EACH CANNOUT WITH ANCHOR BOLT IN PLACE. USE HIGH STRENGTH EMBECO 636 NON-SHRINK, METALLIC AGGREGATE GROUT.
17. OPTION 1: 12 GA GALVANIZED EXPANDED DIAMOND MESH. EMBED 1 1/2" INTO WET CONCRETE AT 2 SIDES AND BOTTOM.
    OPTION 2: 3/16"x1 1/2"x1 1/2" GALVANIZED ANGLE FRAME WITH 12 GA GALVANIZED EXPANDED DIAMOND MESH WELDED TO END OF INTERIOR ANGLE LEG. ANCHOR WITH 3 FASTENERS AT BOTTOM INTO CONCRETE AND 3 FASTENERS AT TOP INTO FLOOR CHANNEL.
18. ANCHOR PLATE – 3/S1.01
19. COUNTER FLASHING (BY OTHERS)
20. GALVANIZED FLASHING, BY MODTECH
21. NOT USED
22. 3/4" ANCHOR BOLT A307 WITH 5" EMBEDMENT OR 3/4" DIA THREADED ROD A36 WITH 5" EMBEDMENT
23. LINE OF BUILDING
24. DOOR
25. DOOR FRAME
26. ALUMINUM THRESHOLD
27. #5 TOP AND BOTTOM CONTINUOUS
28. 3-#5'S EACH WAY AT BOTTOM
29. 4-#5 X L VERTS
30. #4 SQUARE TIES AT 8" OC
31. #4 SQUARE TIES; 2 AT TOP OF FOOTING
32. #4 CONTINUOUS
33. #3 VERTICAL AT 24" OC FOR BUILDINGS 60'x40' AND GREATER ONLY
34. LAP 4"
35. STANDARD 90° HOOK TYPICAL
36. DRYWELL 3" DEEP WITH 3/8" PEA GRAVEL (ONLY AT ACCESS)
37. 3/8"#x3" ANCHOR BOLT WELDED TO ANCHOR FRAME
38. 1 1/4"x1"x1/4" ANGLE FRAME
39. HORIZONTAL GRATE: GRATE OPENING TO BE MAXIMUM 1" EXCEPT 1/2" IN PATH OF TRAVEL. (UPGRADE CHANGE ORDER REQUIRED) SEE ARCHITECTURAL SITE PLAN.
40. CONCRETE AREAWAY WALL
41. FINISH GRADE
42. STEEL FLOOR FRAME (STR)
43. FINISH PAD ELEVATION – REFER TO GENERAL NOTES
44. NEAT CUT TRENCH
45. 4" BUILDING SEPARATION AT ADJACENT BUILDING – OPTIONAL
46. BUILDING LINE
47. 1-#5 AT SIDE WALLS, 2-#5 AT END WALLS
48. BEND TOP BARS DOWN
49. BOTTOM OF FOOTING

NOTES

FOR DETAILS 1 THROUGH 4:
* 1. 11" MIN/30" MAX ON BUIDLINGS OVER 2160 SQ. FT.

IDENTIFICATION STAMP DIV. OF THE STATE ARCHITECT OFFICE OF REGULATION SERVICES
04 105337 AC FLS DATE JUN 05 2003

FILE PATH: 2440-F3.11.DWG

PROJECT NO.4562

PC- 04-104801

REVISIONS

1			
2			
3			
4			
5			

Electrical Engineer's Seal | Mechanical Engineer's Seal | PC Professional of Record Seal | Architects Seal

IDENTIFICATION STAMP DIV. OF THE STATE ARCHITECT OFFICE OF REGULATION SERVICES
PC-04 104801 AC FLS RSS DATE 5/1/03

MODTECH INC.
2830 BARRETT AVENUE PERRIS, CALIF. 92571
PH (909) 943-4014 FAX (909) 940-0427

PROJECT NUMBER: 4562

© MODTECH, INC. 2002

DRAWN BY: dl. DATE: 6-02-03
CHECKED BY: DATE:

MODTECH Index No.

FOUNDATION DETAILS BELOW GRADE CONCRETE

F3.11

REAR

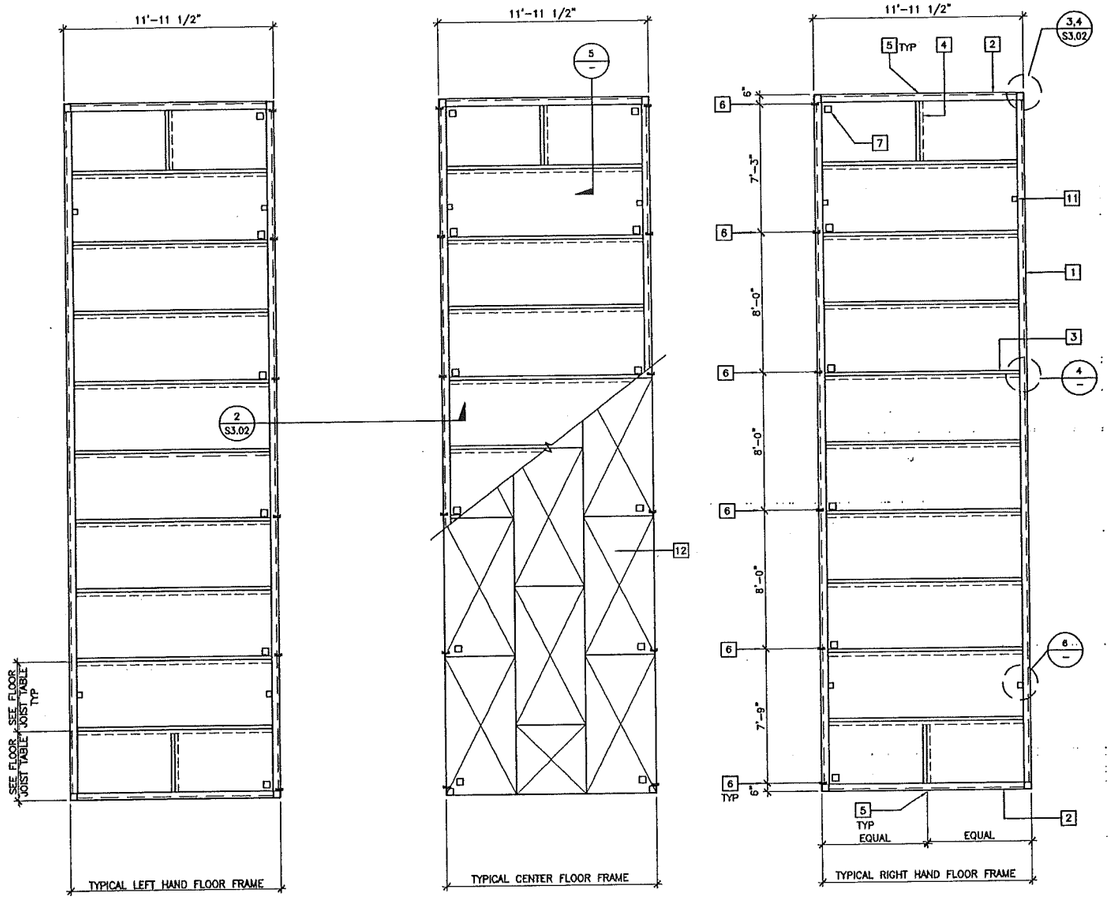

FRONT

SEE FLOOR JOIST TABLE FOR APPROPRIATE SPACING

FLOOR FRAMING PLAN

SCALE: 1/4" = 1'-0"

DATE SIGNED APR 30 2003

PC
CBC 2001

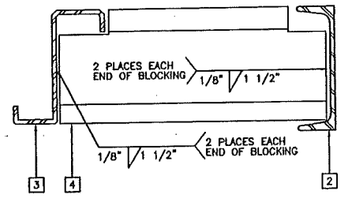

SCALE: NTS

FLOOR HEADER BLOCKING 5

SCALE: NTS

SHIPPING HOLD DOWN 6

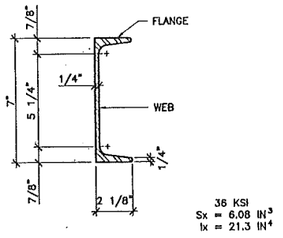

36 KSI
S_x = 6.08 IN^3
I_x = 21.3 IN^4

C7x9.8 - ASTM A36

SCALE: 3"=1'-0"

FLOOR BEAM/HEADER 1

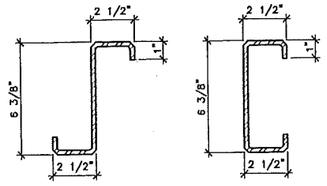

ASTM A-570 GRADE 33

SCALE: 3"=1'-0"

FLOOR JOIST 2

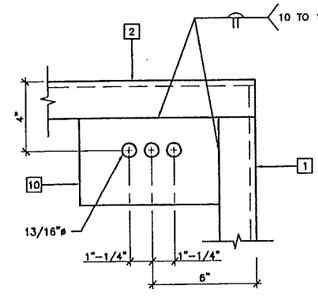

SCALE: 3"=1'-0" OPTIONAL

7 ANCHOR PLATE CONCRETE FOUNDATION 3

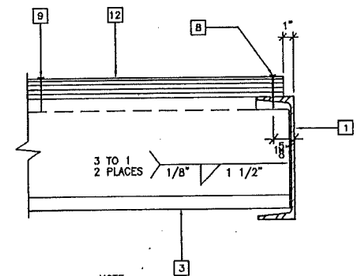

NOTE:
THIS WELD SHALL PROVIDE A 1 1/2" WELD EVERY 2", THE SYMBOL INDICATES TO PUT THE SAME TWO (1/8" FILLET) WELDS ON EACH FACE OF THE JOIST.

SCALE: NTS

8 FLOOR JOIST TO FLOOR BEAM 4

KEY NOTES

1. [FLOOR BEAM, COPE TO MATE WITH HEADER – 1/S1.01
2. [FLOOR HEADER – 1/S1.01
3. ∫ FLOOR JOIST – 2/S1.01
4. ∫ BLOCKING AT MIDSPAN OF FLOOR HEADER – 2/S1.01
5. 11/16"ø HOLE AT MIDDEPTH FOR HANDLING
6. 11/16"ø MODLINE BOLT HOLE – 2/S3.01
7. 5" SQUARE HAND HOLES AT EACH MODLINE BOLT LOCATION
8. EDGE NAILING AT FLOOR BEAM OR HEADER – #10 x 1 3/4" SELF TAPPING FLAT HEAD SCREWS AT 6" OC
9. EDGE NAILING OR FIELD NAILING – AEROSMITH BZH .144 SHOT PINS (ICBO NO. ER-5667) AT 6" OC, FIELD NAILING TO BE 10" OC FOR PURLIN SPACING OF 32" OR LESS
10. 5" x 8" x 1/4" STEEL ANCHOR PLATE FOR OPTIONAL CONCRETE FOUNDATION ONLY
11. 3 1/2" x 3 1/2" x 1/4" TUBE STEEL CUT TO 1 3/4" LENGTH – SHIPPING HOLD DOWN
12. PLYWOOD FLOOR SHEATHING: APA PS 1-95, 1 1/8" THICK STURD-I-FLOOR WITH 48" OC SPAN RATING – LAYOUT PATTERN SHOWN IS TYPICAL

IDENTIFICATION STAMP
DIV. OF THE STATE ARCHITECT
OFFICE OF REGULATION SERVICES
04 105337
AC FLS SS
DATE JUN 05 2003

NOTE:
ALL COLD-FORMED SECTION PROPERTIES SHOWN ARE GROSS PROPERTIES

FLOOR JOIST TABLE

LIVE LOAD	STANDARD JOIST SPACING	UPGRADE TO STIFFEN FLOOR OPTIONAL JOIST SPACING		
50 PSF	48"	32"	24"	16"
50 + 20 PSF	32"	24"	16"	12"
100 PSF	24"	16"	12"	N/A
125 PSF	16"	12"	N/A	N/A

REVISIONS

1			
2			
3			
4			
5			

Electrical Engineer's Seal

Mechanical Engineer's Seal

PC Professional of Record Seal
REGISTERED PROFESSIONAL ENGINEER
STRUCTURAL
STATE OF CALIFORNIA
LICENSE EXPIRES 6-30-2004

Architects Seal

IDENTIFICATION STAMP
DIV. OF THE STATE ARCHITECT
OFFICE OF REGULATION SERVICES
PC-04
104801
AC FLS SS
DATE 4/29/03

MODTECH™ INC.
2830 BARRETT AVENUE
PERRIS, CALIF. 92571
PH (909) 943-4014
FAX (909) 940-0427

PROJECT NUMBER: 4562

© MODTECH, INC. 2002

DRAWN BY: dt.
DATE: 6-02-03
CHECKED BY:
DATE:

MODTECH Index No.

FLOOR FRAMING PLAN WOOD FLOOR

S1.01

PROJECT NO. 4562

PC-04-104801

FILE PATH: 2440-S1.01.DWG

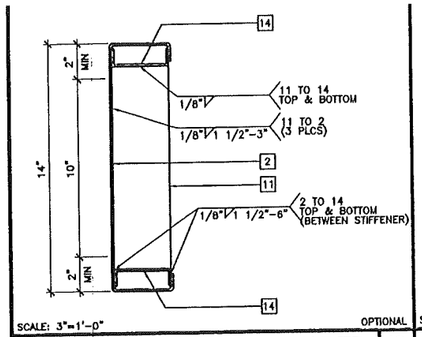

SCALE: 3"=1'-0" OPTIONAL

HVAC OPENING IN ROOF HEADER | 13

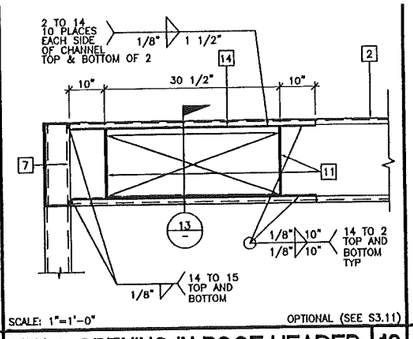

SCALE: 1"=1'-0" OPTIONAL (SEE S3.11)

HVAC OPENING IN ROOF HEADER | 12

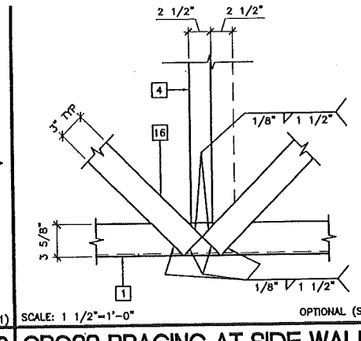

SCALE: 1 1/2"=1'-0"

CROSS BRACING AT SIDE WALL | 11

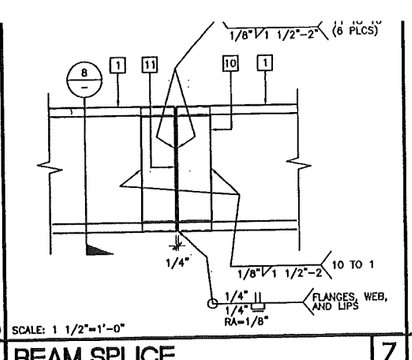

SCALE: 1 1/2"=1'-0"

BEAM SPLICE | 7

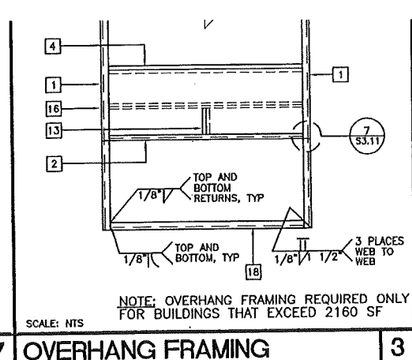

NOTE: OVERHANG FRAMING REQUIRED ONLY FOR BUILDINGS THAT EXCEED 2160 SF

SCALE: NTS

OVERHANG FRAMING | 3

1 ⊏ TAPERED ROOF BEAM – 1/S2.11

2 ⊏ ROOF HEADER – 2/S2.11

3 NOT USED

4 ⊐ ROOF PURLIN – 3/S2.11 (NOTE: DOUBLE ALL ROOF PURLINS WHERE MOVABLE PARTITION OCCURS. SEE A7.01)

5 RIDGE LINE

6 11/16"ø DRILLED HOLE – 5/S3.11

7 TUBE STEEL STIFFENER

8 22 GA STANDING SEAM ROOF – A3.11

9 OPTIONAL BEAM SPLICE LOCATIONS

10 10 GA BENT PLATE BACK UP

11 1/4" FULL DEPTH STIFFENER PLATE AT 4'-0" OC TYPICAL ALIGN WITH PURLIN

12 NOT USED

13 USE 6" x 2 1/2" 14 GA BLOCKING AT HEADER MIDSPAN FOR 80 MPH DESIGN WIND LOAD ONLY

14 3 1/4"x1" 10 GA CHANNEL STIFFENER

15 2" 20 GA STRAP CROSS BRACING – MOUNT TO TOPSIDE OF PURLINS – TACK WELD TO EACH PURLIN

16 LOCATION OF ADDITIONAL PURLIN FOR BUILDINGS THAT EXCEED 2160 SQUARE FEET

17 USE 6" x 2 1/2" 14 GA BLOCKING FOR ROUGH OPENING OF OPTIONAL ROOF MOUNT HVAC. SPACING AND LOCATION WILL VARY (HV)

18 8"x2" ROOF FASCIA BEAM

FILE PATH: 2440-S2.11.DWG

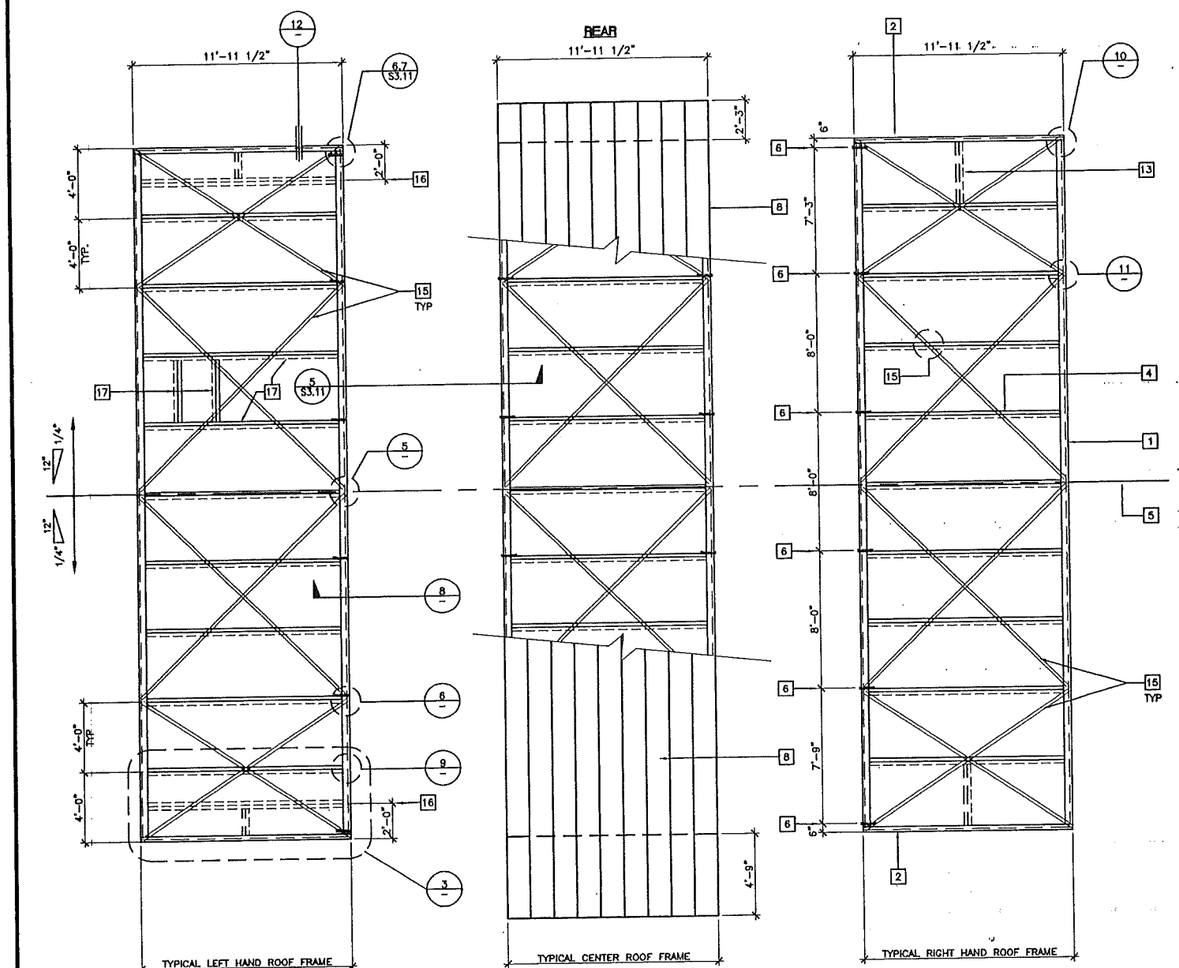

ROOF FRAMING PLAN

DATE SIGNED APR 12 2004

24 GA/DUAL PITCH/8 & 12 LIGHTS

SCALE: 1/4" = 1'-0"

PC

CBC 2001

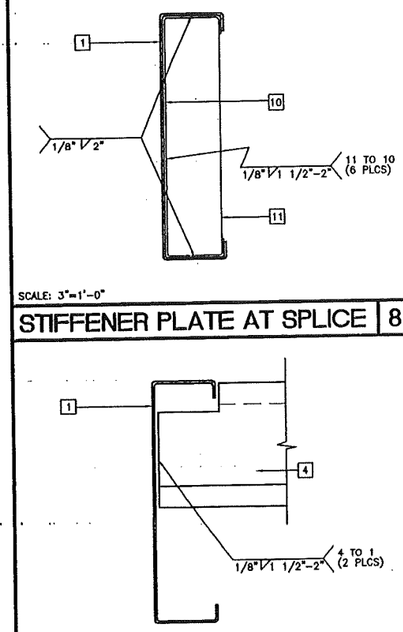

SCALE: 3"=1'-0"

STIFFENER PLATE AT SPLICE | 8

SCALE: 3"=1'-0" SEE A/S3.01

PURLIN TO ROOF BEAM | 9

SCALE: 1 1/2"=1'-0"

CROSS BRACING AT END WALL | 10

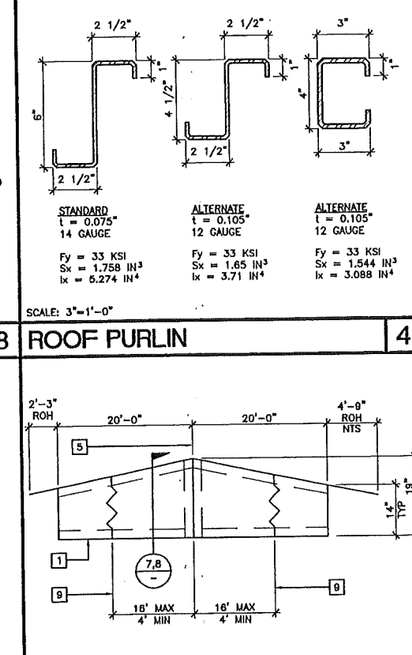

SCALE: 3"=1'-0"

ROOF PURLIN | 4

SCALE: NTS

PURLIN/STIFFENER TO ROOF BEAM | 6

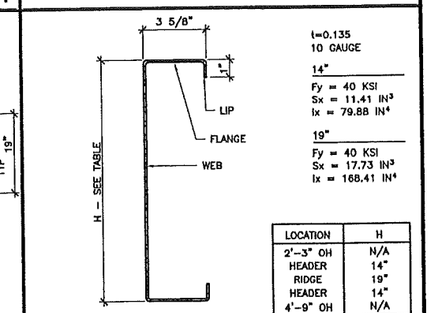

SCALE: 3"=1'-0"

TAPERED ROOF BEAM | 1

NOTE:
ALL COLD-FORMED SECTION PROPERTIES SHOWN ARE GROSS PROPERTIES

SCALE: 3"=1'-0" SEE A/S3.11

PURLIN/STIFFENER TO ROOF BEAM | 6

SCALE: 3"=1'-0"

ROOF HEADER | 2

IDENTIFICATION STAMP DIV. OF THE STATE ARCHITECT OFFICE OF REGULATION SERVICES
04 105337
AC — FLS —
DATE JUN 0 5 2003

PROJECT NO. 4562

PC-04-104801

REVISIONS			
1			
2			
3			
4			
5			

Electrical Engineer's Seal

Mechanical Engineer's Seal

PC Professional of Record Seal
REGISTERED PROFESSIONAL ENGINEER JAMES T. STANSON STRUCTURAL STATE OF CALIFORNIA
LICENSE EXPIRES 6-30-2004

Architects Seal

IDENTIFICATION STAMP DIV. OF THE STATE ARCHITECT OFFICE OF REGULATION SERVICES
PC-04 104801
AC — FLS —
DATE 5/14/04

MODTECH INC.
2830 BARRETT AVENUE
PERRIS, CALIF. 92571
PH (909) 943-4014
FAX (909) 940-0427

PROJECT NUMBER: 4562

© MODTECH, INC. 2002

DRAWN BY: dt.
DATE: 6-02-03
CHECKED BY:
DATE:

(8 & 12 LIGHTS)

ROOF FRAMING PLAN 22 GA DUAL PITCH

MODTECH Index No.

S2.11

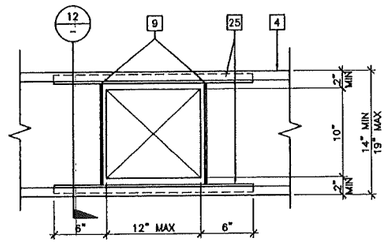

NOTE: BEAM PENETRATIONS ALLOWED ONLY IN CENTER THIRD OF BEAM AT 18" MIN EDGE OF HOLE TO EDGE OF HOLE

SCALE: 1 1/2"=1'-0"

OPTIONAL BEAM PENETRATION | 11

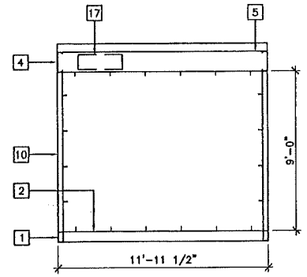

SCALE: 1/4"=1'-0"

SECTION AT END WALL | B

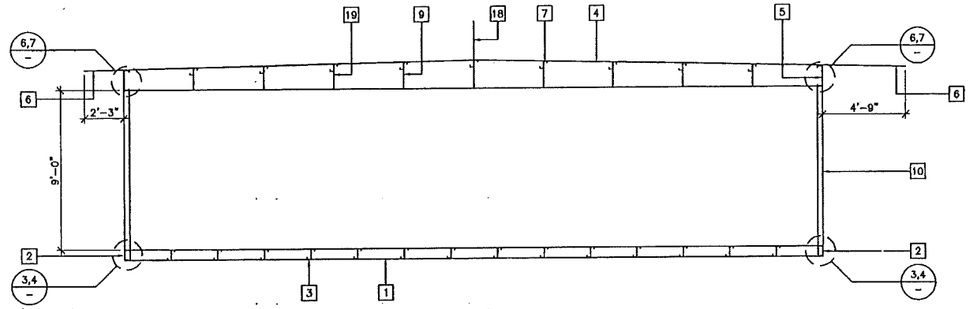

SCALE: 1/4"=1'-0"

SECTION AT SIDE WALL | A

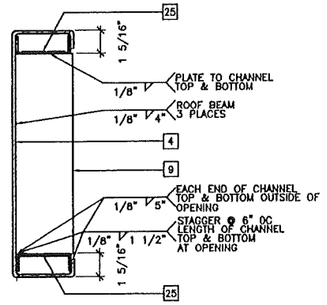

SCALE: 3"=1'-0"

PENETRATION REINFORCMENT | 12

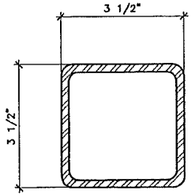

ASTM A-500, GRADE B
SEE TABLE THIS SHEET

SCALE: 6"=1'-0"

TUBE STEEL COLUMN/STIFFENER | 8

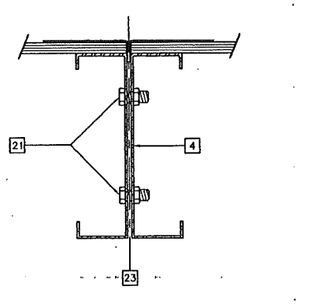

SCALE: NTS

MODULE CONNECTION AT ROOF | 5

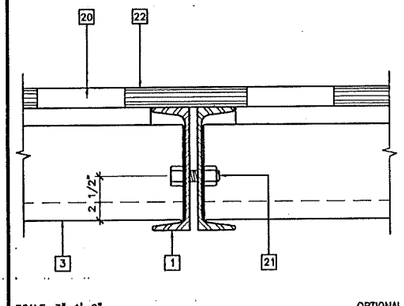

SCALE: 3"=1'-0" OPTIONAL

MODULE CONNECTION AT FLOOR | 2

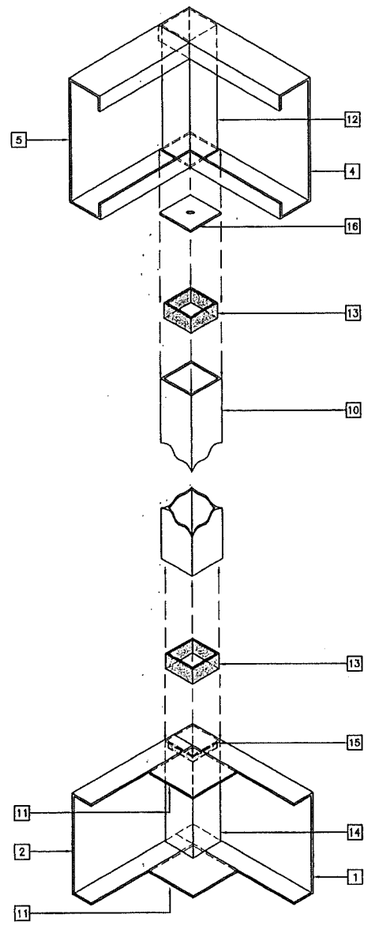

SCALE: NTS

KEY NOTES

1. [FLOOR BEAM – 1/S1.01
2. [FLOOR HEADER – 1/S1.01
3. ⌠ FLOOR JOIST – 2/S1.01
4. [TAPERED ROOF BEAM – 1/S2.11
5. [ROOF HEADER – 2/S2.11
6. OVERHANG – 3/S2.11
7. ⌠ ROOF PURLIN – 4/S2.11
8. NOT USED
9. 1/4" FULL DEPTH STIFFENER PLATE AT 8'–0" OC TYPICAL ALIGN WITH PURLIN – 6/S2.11
10. 3 1/2" x 3 1/2" x " TUBE STEEL COLUMN (SEE COLUMN BELOW)
11. 3 1/2" x 3 1/2" x 1/4" STEEL STIFFENER PLATE. WHEN CONCRETE FOUNDATIONS ARE USED REPLACE LOWER PLATE WITH 5" x 8" x 1/4" ANCHOR BOLT PLATE – 3/S1.01
12. 3 1/2" x 3 1/2" x 1/4" TUBE STEEL STIFFENER
13. (1) 3" x 3" 10 GA TUBE STEEL BACK UP TUBE OR (4) 10 GA BACK UP PLATES
14. 3 1/2" x 3 1/2" x 1/4" ANGLE STIFFENER
15. BACK–UP PLATE – 10 GA MIN
16. 1/4" BASE PLATE – INSERT FLUSH WITH STIFFENER TUBE
17. OPTIONAL HVAC DUCT OPENING – 12/S2.11
18. RIDGE
19. 1/4" FULL DEPTH STIFFENER PLATE AT 4'–0" OC AT SIDEWALLS ALIGN WITH PURLINS FOR 80 MPH DESIGN WIND LOAD ONLY
20. HAND HOLE AT BOLT LOCATION
21. 5/8" MB A307 AT MODULE CONNECTION JOINT – SEE FLOOR/ROOF FRAMING PLANS
22. FLOOR SHEATHING
23. MODLINE (M)
24. NOT USED
25. 3 1/4" x 1" 10 GA CHANNEL STIFFENER
26. 10 GA PLATE (REFER TO DETAIL CHART FOR DIMENSIONS –14/S3.11)

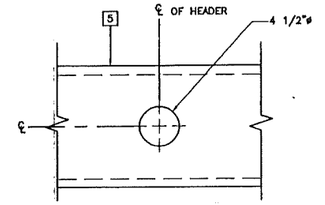

SCALE: 1 1/2"=1'-0"

ATTIC RELIEF VENT IN HEADER | 13

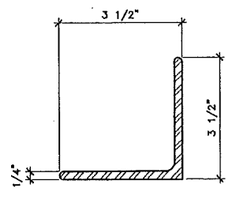

ASTM A-36

SCALE: 6"=1'-0"

STIFFENER ANGLE | 9

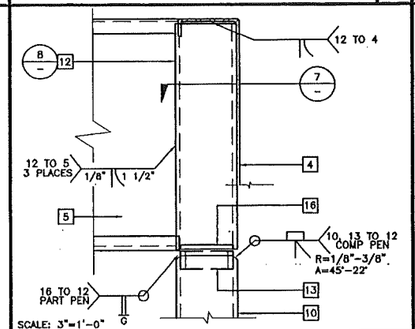

SCALE: 3"=1'-0"

COLUMN AT ROOF | 6

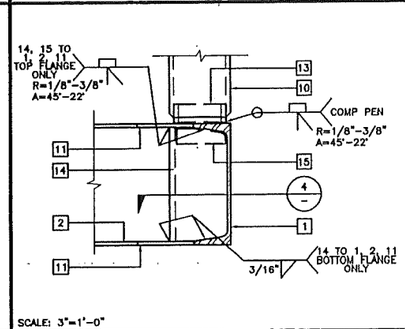

SCALE: 3"=1'-0"

COLUMN AT FLOOR | 3

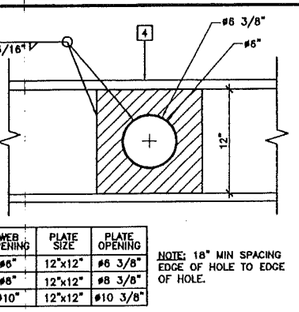

WEB OPENING	PLATE SIZE	PLATE OPENING
#6"	12"x12"	#6 3/8"
#8"	12"x12"	#8 3/8"
#10"	12"x12"	#10 3/8"

NOTE: 18" MIN SPACING EDGE OF HOLE TO EDGE OF HOLE.

SCALE: 1 1/2"=1'-0"

OPTIONAL BEAM PENETRATION | 14

PC
CBC 2001
DATE SIGNED
APR 30 2003

NOT USED | 10

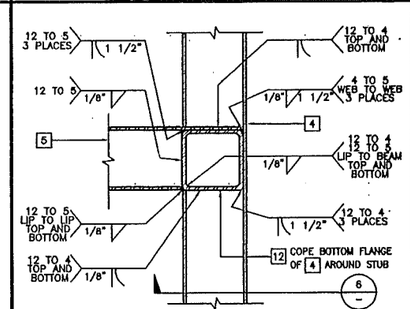

SCALE: 3"=1'-0"

COLUMN AT ROOF | 7

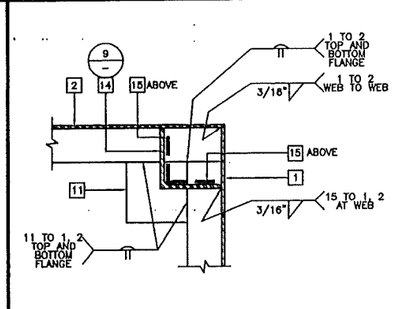

SCALE: 3"=1'-0"

STIFFENER AT FLOOR | 4

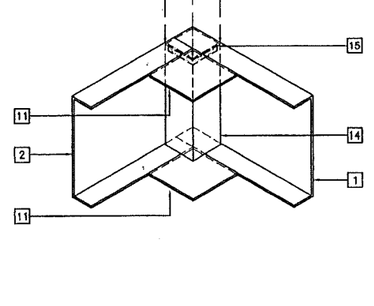

SCALE: NTS

COLUMN AT FLOOR AND ROOF | 1

NOTES

1. ALL WELDS USED IN PRIMARY MEMBERS AND CONNECTIONS IN THE LATERAL FORCE–RESISTING SYSTEMS SHALL BE MADE WITH A FILLER METAL THAT HAS A MINIMUM CHARPY V–NOTCH TOUGHNESS OF 20 FT/LBS AT MINUS 20 DEGREES F AS DETERMINED BY AWS CLASSIFICATION OR MANUFACTURER CERTIFICATION. (ALL MEMBERS EXCEPT LIGHT GUAGE).

COLUMN SIZE TABLE

DESIGN WIND LOAD	COLUMN SIZE
70 MPH	3 1/2" x 3 1/2" x 1/4"
80 MPH	3 1/2" x 3 1/2" x 5/16"

IDENTIFICATION STAMP
DIV. OF THE STATE ARCHITECT
OFFICE OF REGULATION SERVICES
04 105337
AC. ___ PLS. 33
DATE JUN 05 2003

FILE PATH: 2440–S3.11.DWG

PROJECT NO. 4562

PC– 04–104801

REVISIONS

1			
2			
3			
4			
5			

Electrical Engineer's Seal

Mechanical Engineer's Seal

PC Professional of Record Seal
STRUCTURAL ENGINEER
STATE OF CALIFORNIA
LICENSE EXPIRES 6-30-2004

Architects Seal

IDENTIFICATION STAMP
DIV. OF THE STATE ARCHITECT
OFFICE OF REGULATION SERVICES
PC–04
104801
AC. ___ PLS. 33
DATE 5/14/03

MODTECH™ INC.
2830 BARRETT AVENUE
PERRIS, CALIF. 92571
PH (909) 943–4014
FAX (909) 940–0427

PROJECT NUMBER: 4562

© MODTECH, INC. 2002

DRAWN BY: dt.
DATE: 6–02–03
CHECKED BY:
DATE:

(8 & 12 LIGHTS)

STRUCTURAL FRAMING 22 GA DUAL PITCH

MODTECH Index No.
S3.11

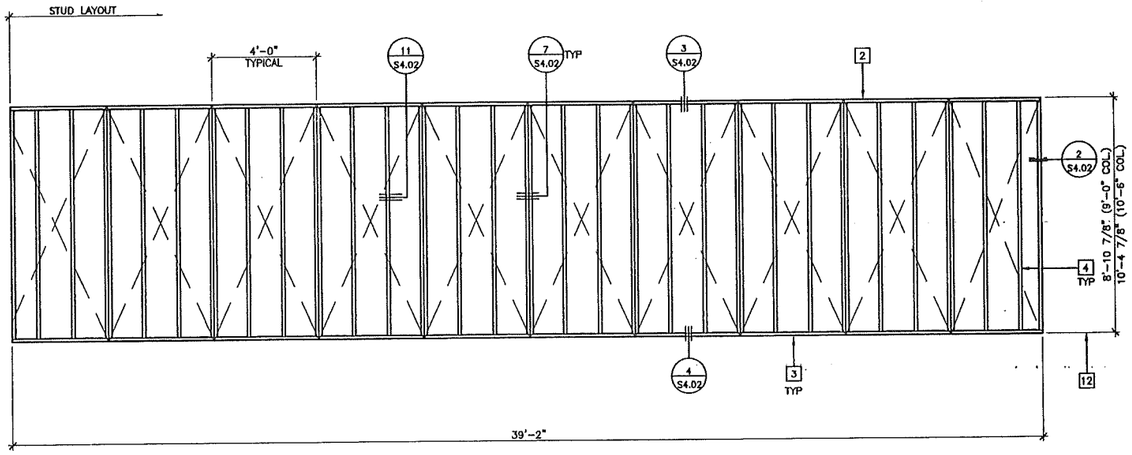

TYPICAL SIDE WALL 14

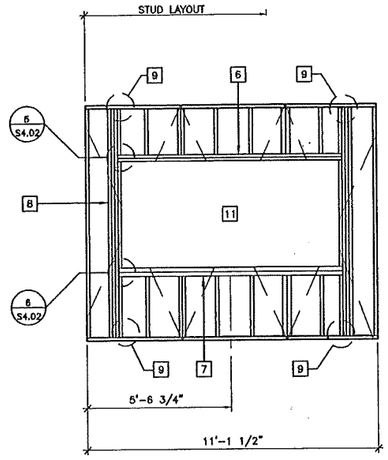

TYPICAL WINDOW

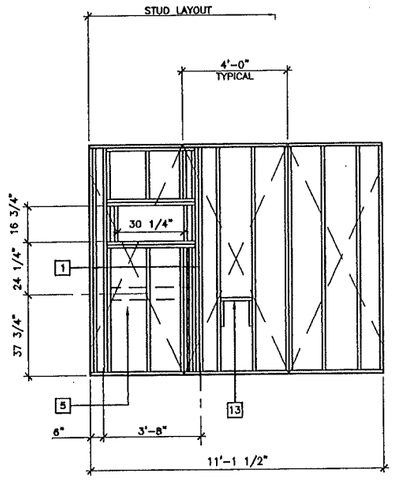

TYPICAL HVAC

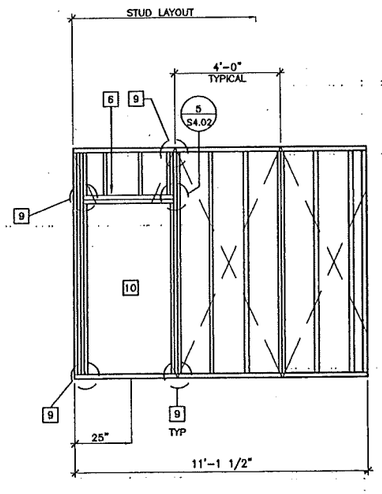

TYPICAL DOOR

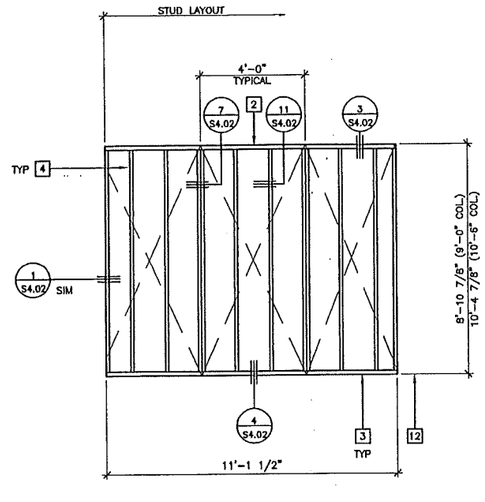

TYPICAL END WALL

KEY NOTES

1. 4"x4" POST
2. 2"x4" TOP PLATE
3. 2"x4" FLOOR SILL PLATE
4. 2"x4" STUDS AT 16" OC TYPICAL – FOR BUILDINGS EXCEEDING 2160 SF ONLY USE 12" OC SPACING WITHIN 4'–0" OF BUILDING CORNERS
5. 2"x6" LET IN FOR AC SUPPORT
6. 2"x4" HEADER – SEE ROUGH OPENING SCHEDULE ON SHEET S4.02
7. 2"x4" SILL – SEE ROUGH OPENING SCHEDULE ON SHEET S4.02
8. 2"x4" FULL HEIGHT KING STUDS AND 2"x4" TRIMMER 13/S4.02 SEE ROUGH OPENING SCHEDULE ON SHEET S4.02
9. A 34 CLIPS AT HEADER AND SILL TO FULL HEIGHT STUDS AND FULL HEIGHT STUDS TO TOP AND BOTTOM PLATES
10. REQUIRED OPENING FOR A 3068 DOOR SEE ROUGH OPENING SCHEDULE ON SHEET S4.02
11. REQUIRED OPENING FOR A 8040 WINDOW SEE ROUGH OPENING SCHEDULE ON SHEET S4.02
12. FINISH FLOOR LINE
13. FRAME FOR ELECTRICAL PANEL
14. PROVIDE 2x6 FLAT WALL BLOCKING WITH 3–16d BOX NAILS EACH END AT EACH HANDRAIL CONNECTION – 6/R1.01 SEE FLOOR PLAN FOR RAMP LOCATION.

FILE PATH: 2440–S4.01.DWG

IDENTIFICATION STAMP
DIV. OF THE STATE ARCHITECT
OFFICE OF REGULATION SERVICES
04 105337
AC — FLS SS
DATE JUN 05 2003

FOR 10'–6" COLUMN HEIGHT OPTION
USE 6" WALL FRAMING

DATE SIGNED
APR 30 2003

PC
CBC 2001

WALL FRAMING ELEVATIONS

WOOD STUDS
SCALE: 1/4" = 1'–0"

REVISIONS	Electrical Engineer's Seal	Mechanical Engineer's Seal	PC Professional of Record Seal	Architects Seal
1				
2				
3				
4				
5				

IDENTIFICATION STAMP
DIV. OF THE STATE ARCHITECT
OFFICE OF REGULATION SERVICES
PC–04
104801
AC — FLS SS
DATE 5/16/03

MODTECH INC.
2830 BARRETT AVENUE
PERRIS, CALIF. 92571
PH (909) 943–4014
FAX (909) 940–0427

PROJECT NUMBER: 4562

© MODTECH, INC. 2002

DRAWN BY: dt.
DATE: 6–02–03
CHECKED BY:
DATE:

MODTECH Index No.

WALL FRAMING WOOD STUDS

S4.01

PC–04–104801 PROJECT NO. 4562

1. 3" x18 GA. BENT Z STRAP W/ 2-8d BOX EACH END AT 2'-0" O.C. ALTERNATE DIRECTION OF STRAPS. (2 STRAPS = 4'-0")
2. CONTINUOUS SEALANT TYPICAL
3. 5/8" TYPE X GYPSUM BOARD BOTH SIDES
4. FLAT 2x4 CONT. W/ 8d AT 16" O.C. TO ROOF SHEATHING

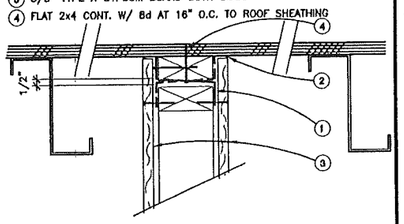

SCALE: 3"=1'-0" PERPENDICULAR TO PURLINS

PARALLEL (RATED 16/A6.21) 13

1. 3" x18 GA. BENT Z STRAP W/ 2-8d BOX EACH END AT 2'-0" O.C. ALTERNATE DIRECTION OF STRAPS. (2 STRAPS = 4'-0")
2. CONTINUOUS SEALANT TYPICAL
3. 5/8" TYPE X GYPSUM BOARD BOTH SIDES
4. FLAT 2x4 BETWEEN PURLINS W/ 8d AT 16" O.C. TO ROOF SHEATHING.
5. FLAT 2x4 CONT. W/ 2-#12x2" STS PER PURLIN

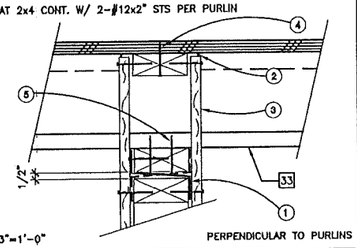

SCALE: 3"=1'-0" PERPENDICULAR TO PURLINS

PERPENDICULAR (RATED 16/A6.21) 14

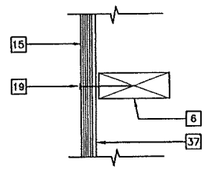

SCALE: 3"=1'-0"

15 SECTION AT STUD

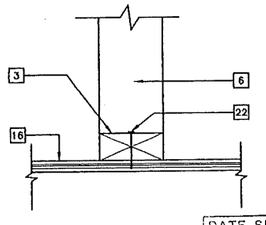

SCALE: 3"=1'-0"

16 PARTITION CONNECTION AT FLOOR

1. 3" x18 GA. BENT Z STRAP W/ 2-8d BOX EACH END AT 2'-0" O.C. ALTERNATE DIRECTION OF STRAPS. (2 STRAPS = 4'-0")
2. 2x4 CONT. W/ 2-16d PER BLOCK
3. 2x4 BLOCK W/ 2-#10x2" STS PER PURLIN. 4 TOTAL PER BLOCK
4. 2x4 WALL FRAMING W/ TYPICAL INTERIOR WALL COVER.

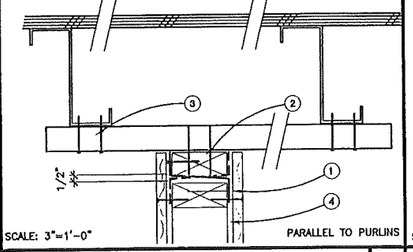

SCALE: 3"=1'-0" PARALLEL TO PURLINS

INTERIOR PARTITION PARALLEL 9

1. 3" x18 GA. BENT Z STRAP W/ 2-8d BOX EACH END AT 2'-0" O.C. ALTERNATE DIRECTION OF STRAPS. (2 STRAPS = 4'-0")
2. FLAT 2x4 CONT. W/ 2-#12x2" STS PER PURLIN

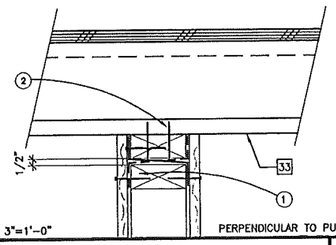

SCALE: 3"=1'-0" PERPENDICULAR TO PURLINS

INTERIOR PARTITION PERPENDICULAR 10

SCALE: 3"=1'-0"

11 VERTICAL PLYWOOD JOINT

SCALE: 3"=1'-0"

12 HORIZONTAL PLYWOOD JOINT

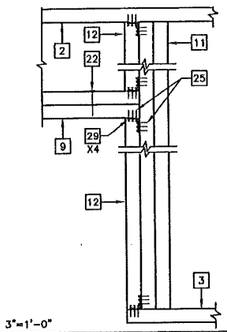

SCALE: 3"=1'-0"

DOOR/WINDOW HEADER AND JAMB 5

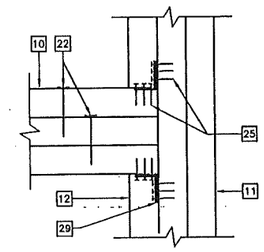

SCALE: 3"=1'-0"

WINDOW SILL AND JAMB 6

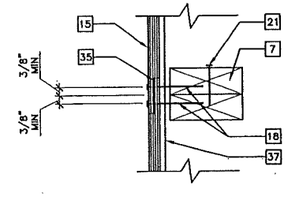

SCALE: 3"=1'-0"

7 VERTICAL PLYWOOD JOINT

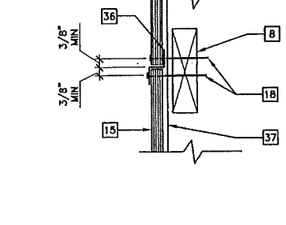

SCALE: 3"=1'-0"

8 HORIZONTAL PLYWOOD JOINT

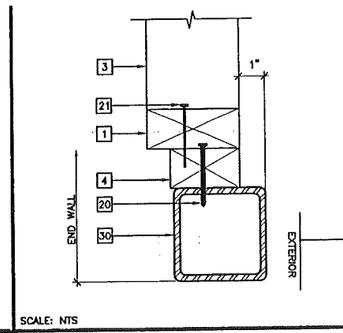

SCALE: NTS

COLUMN AT END WALL 1

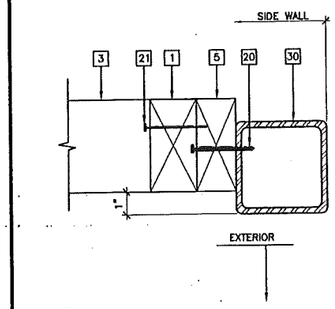

SCALE: NTS

COLUMN AT SIDE WALL 2

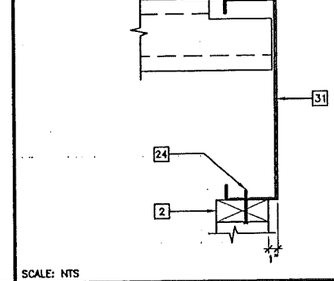

SCALE: NTS

3 TOP PLATE AT ROOF BEAM

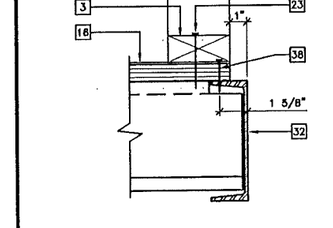

SCALE: 3"=1'-0"

4 WALL SILL AT FLOOR

NAILING SCHEDULE

CONNECTION: (ALL NAILS SHALL BE BOX NAILS, U.O.N.)	NAILING[4]:
1. JOIST TO SILL OR GIRDER, TOENAIL	3-8d
2. BRIDGING TO JOIST, TOENAIL EACH END	2-8d
3. 1"x6" SUBFLOOR OR LESS TO EACH JOIST, FACE NAIL	2-8d
4. WIDER THAN 1"x6" SUBFLOOR TO EACH JOIST, FACE NAIL	3-8d
5. 2" SUBFLOOR TO JOIST OR GIRDER, BLIND AND FACE NAIL	2-16d
6. SOLE PLATE TO JOIST OR BLOCKING: TYPICAL FACE NAIL	16d AT 16" OC
AT BRACED WALL PANELS	3-16d PER 16"
7. TOP PLATE TO STUD, END NAIL	2-16d
8. STUD TO SOLE PLATE	4-8d, TOENAIL OR 2-16d, END NAIL
9. DOUBLE STUDS, FACE NAIL	16d AT 24" OC
10. DOUBLE TOP PLATES, TYPICAL FACE NAIL	16d AT 16" OC
DOUBLE TOP PLATES, LAP SPLICE	8-16d
11. BLOCKING BETWEEN JOISTS, RAFTERS TO TOP PLATE, TOENAIL	3-8d
12. RIM JOIST TO TOP PLATE, TOENAIL	8d AT 6" OC
13. TOP PLATES, LAPS AND INTERSECTIONS, FACE NAIL	2-16d
14. CONTINUOUS HEADER; TWO PIECES	16d AT 16" OC ALONG EA. EDGE
15. CEILING JOIST TO PLATE, TOENAIL	3-8d
16. CONTINUOUS HEADER TO STUD, TOENAIL	4-8d
17. CEILING JOISTS, LAPS OVER PARTITIONS, FACE NAIL	3-16d
18. CEILING JOISTS, TO PARALLEL RAFTERS, FACE NAIL	3-16d
19. RAFTER TO PLATE, TOENAIL	3-8d
20. 1" BRACE TO EACH STUD AND PLATE, FACE NAIL	2-8d
21. 1"x8" OR LESS SHEATHING TO EACH BEARING, FACE NAIL	2-8d
22. WIDER THAN 1"x8" SHEATHING TO EACH BEARING, FACE NAIL	3-8d
23. BUILT-UP CORNER STUDS	16d AT 24" OC
24. BUILT-UP GIRDER AND BEAMS	20d AT 32" OC TOP AND BOTTOM AND STAGGERED 2-20d AT ENDS AND AT EACH SPLICE
25. 2" PLANKS	2-16d AT EACH BEARING
26. WOOD STRUCTURAL PANELS AND PARTICLEBOARD[2]:	
SUBFLOOR AND WALL SHEATHING (TO FRAMING):	
1/2" AND LESS	6d[3]
19/32"-3/4"	8d[4] OR 6d[5]
7/8"-1"	8d[3]
1 1/8"-1 1/4"	10d[4] OR 8d[5]
COMBINATION SUBFLOOR-UNDERLAYMENT (TO FRAMING):	
3/4" AND LESS	6d[5]
7/8"-1"	8d[5]
1 1/8"-1 1/4"	10d[4] OR 8d[5]
27. PANEL SIDING (TO FRAMING)[2]: 1/2" OR LESS	6d[6]
5/8"	8d[6]
28. FIBERBOARD SHEATHING[7]: 1/2" AND 25/32"	NO.11 GA[8], 8d[4], NO.16 GA[9]
29. INTERIOR PANELING: 1/4"	4d[10]
3/8"	6d[11]

FOOTNOTES

[1] COMMON OR BOX NAILS MAY BE USED EXCEPT WHERE OTHERWISE STATED.
[2] NAILS SPACED AT 6" ON CENTER AT EDGES, 12" AT INTERMEDIATE SUPPORTS EXCEPT 6" AT ALL SUPPORTS WHERE SPANS ARE 48" OR MORE. FOR NAILING OF WOOD STRUCTURAL PANEL AND PARTICLEBOARD DIAPHRAGMS AND SHEAR WALLS, REFER TO SECTIONS 2315.3.3 AND 2315.4. NAILS FOR WALL SHEATHING MAY BE COMMON, BOX OR CASING.
[3] COMMON OR DEFORMED SHANK.
[4] COMMON.
[5] DEFORMED SHANK.
[6] CORROSION-RESISTANT SIDING OR CASING NAILS CONFORMING TO THE REQUIREMENTS OF SECTION 2304.3.
[7] FASTENERS SPACED 3" ON CENTER AT EXTERIOR EDGES AND 6" ON CENTER AT INTERMEDIATE SUPPORTS.
[8] CORROSION-RESISTANT ROOFING NAILS WITH 7/16"ø HEAD AND 1 1/2" LENGTH FOR 25/32" SHEATHING CONFORMING TO REQUIREMENTS OF SECTION 2304.3
[9] CORROSION-RESISTANT STAPLES WITH NOMINAL 7/16" CROWN AND 1 1/8" LENGTH FOR 1/2" SHEATHING AND 1 1/2" LENGTH FOR 25/32" SHEATHING CONFORMING TO THE REQUIREMENTS OF SECTION 2304.3.
[10] PANEL SUPPORTS AT 16" (20" IF STRENGTH AXIS IN THE LONG DIRECTION OF THE PANEL, UNLESS OTHERWISE MARKED). CASING OR FINISH NAILS SPACED 6" ON PANEL EDGES, 12" AT INTERMEDIATE SUPPORTS.
[11] PANEL SUPPORTS AT 24". CASING OR FINISH NAILS SPACED 6" ON PANEL EDGES, 12" AT INTERMEDIATE SUPPORTS.
[12] NAILS DRIVEN INTO PRESSURE TREATED WOOD SHALL BE GALVANIZED PER 2304.3

ROUGH OPENING SCHEDULE

OPENING	HEADER	SILL	JAMB	WIDTH	HEIGHT
STANDARD WALLS - 70 MPH WIND					
2068	(2)2"X4"	N/A	(2)2"X4"	26"	81 1/4"
3068	(2)2"X4"	N/A	(2)2"X4"	38"	81 1/4"
6068	(2)2"X4"	N/A	(3)2"X4"	74"	81 1/4"
8040	(3)2"X4"	(2)2"X4"	(4)2"X4"	95 3/4"	47 5/8"
PLASTER WALLS - 70 MPH WIND					
2068	(2)2"X4"	N/A	(3)2"X4"	26"	81 1/4"
3068	(2)2"X4"	N/A	(3)2"X4"	38"	81 1/4"
6068	(2)2"X4"	N/A	(4)2"X4"	74"	81 1/4"
8040	(3)2"X4"	(2)2"X4"	(4)2"X4"	95 3/4"	47 5/8"
STANDARD WALLS - 80 MPH WIND					
2068	(2)2"X4"	N/A	(2)2"X4"	26"	81 1/4"
3068	(2)2"X4"	N/A	(2)2"X4"	38"	81 1/4"
6068	(2)2"X4"	N/A	(3)2"X4"	74"	81 1/4"
8040	(3)2"X4"	(2)2"X4"	(4)2"X4"	95 3/4"	47 5/8"
PLASTER WALLS - 80 MPH WIND					
2068	(2)2"X4"	N/A	(3)2"X4"	26"	81 1/4"
3068	(2)2"X4"	N/A	(3)2"X4"	38"	81 1/4"
6068	(2)2"X4"	N/A	(4)2"X4"	74"	81 1/4"
8040	(3)2"X4"	(2)2"X4"	(5)2"X4"	95 3/4"	47 5/8"

KEYNOTES

1. 2"x4" END STUD
2. 2"x4" TOP PLATE
3. 2"X4" FLOOR SILL PLATE
4. 2"x NAILER AT END WALL
5. 2"x4" NAILER AT SIDE WALL
6. 2"X4" AT 16" OC
7. DOUBLE 2"x4" STUDS AT PLYWOOD EDGES
8. 2"X4" BLOCKING
9. DOOR/WINDOW HEADER - 5,6/S4.02 (SEE SCHEDULE)
10. WINDOW SILL - 6/S4.02
11. FULL HEIGHT JAMB STUDS - 5,6/S4.02
12. 2"x4" TRIMMER STUD
13. 2"X4" DOUBLE TOP PLATE AT INTERIOR PARTITIONS
14. 2"x4" BRACE AT 8'-0" OC MAX AT 45° MAX
15. EXTERIOR SHEATHING NAIL WITH 8d GALVANIZED BOX NAILS AT 6" OC EDGE NAILING, 12" OC FIELD NAILING
16. FLOOR SHEATHING
17. ROOF SHEATHING
18. EDGE NAILING 8d ELECTRO GALVANIZED AT 6" OC
19. FIELD NAILING 8d ELECTRO GALVANIZED AT 12" OC
20. #10 STSMS OR AEROSMITH BZH .144 SHOT PINS (ICBO NO. ER-5667) AT 24" OC (75MPH DESIGN) OR 21" OC (80MPH DESIGN AND PLASTER) AND .144 SHOTPINS AT 6 1/2" OC (17 ADDED SHOT PINS MIN FOR 75MPH WIND SHEAR) OR 5" OC (21 ADDED SHOT PINS MIN FOR 80MPH WIND AND PLASTER)
21. 16d NAIL AT 24" OC
22. 16d NAIL AT 16" OC
23. 16d BOX NAILS AT 8" OC
24. #10 STSMS OR AEROSMITH BZH .144 SHOT PINS (ICBO NO. ER-5667) AT 16" OC (75MPH DESIGN) OR 16" OC (80MPH DESIGN AND PLASTER)
25. 8d 1 1/2" NAILS
26. 1/4"ø x 2 1/2" EYE LAG SCREW AT 8'-0" OC (2" EMBEDMENT)
27. #12x2" TYPE A HEX HEAD SCREWS WITH WASHERS (3 TYP)
28. A35 CLIP BOTH SIDES OF BRACE TO TOP PLATE
29. A34 CLIPS AT HEADER AND SILL TO FULL HEIGHT STUDS AND FULL HEIGHT STUDS TO TOP AND BOTTOM PLATES
30. TUBE STEEL COLUMN (STR)
31. ROOF BEAM OR HEADER (STR)
32. FLOOR BEAM OR HEADER (STR)
33. ROOF PURLIN (STR)
34. 12 GA BRACE WIRES ATTACH TO EYE LAG SCREWS AND TO ROOF PURLINS AT 8'-0" OC, ENDS TO HAVE 4 TIGHT WRAPS IN 1 1/2"
35. LAP JOINT
36. 26 GA SHEET METAL ⌐ FLASHING
37. WATERPROOF MEMBRANE
38. EDGE NAIL AT FLOOR BEAM OR HEADER - #10x1 3/4" SELF TAPPING FLAT HEAD SCREWS AT 6" OC
39. SIMPSON 'STC' CLIPS AT 4'-0" OC FASTENED W/#10 STSMS
40. 2x BRACING SECURED TO ROOF PURLINS W/#8 STSMS

PC
CBC 2001

DATE SIGNED APR 18 2003

IDENTIFICATION STAMP DIV. OF THE STATE ARCHITECT OFFICE OF REGULATION SERVICES
04 105337
AC. FLS. SS.
DATE JUN 05 2003

REVISIONS

1			
2			
3			
4			
5			

Electrical Engineer's Seal | Mechanical Engineer's Seal | PC Professional of Record Seal | Architects Seal

PC Professional of Record Seal: REGISTERED PROFESSIONAL ENGINEER, CHARLES C. SIMPSON, No. 47602, STRUCTURAL, STATE OF CALIFORNIA
LICENSE EXPIRES 6-30-2004

IDENTIFICATION STAMP DIV. OF THE STATE ARCHITECT OFFICE OF REGULATION SERVICES
PC-04
104801
AC. FLS. SS.
DATE 5/12/03

MODTECH™ INC.
2830 BARRETT AVENUE PH (909) 943-4014
PERRIS, CALIF. 92571 FAX (909) 940-0427

PROJECT NUMBER: 4562

© MODTECH, INC. 2002

DRAWN BY: dt.
DATE: 6-02-03
CHECKED BY:
DATE:

MODTECH Index No.

WALL FRAMING DETAILS

S4.02

PROJECT NO. 4562

FILE PATH: 2440-S4.02.DWG

SC- 04-104801

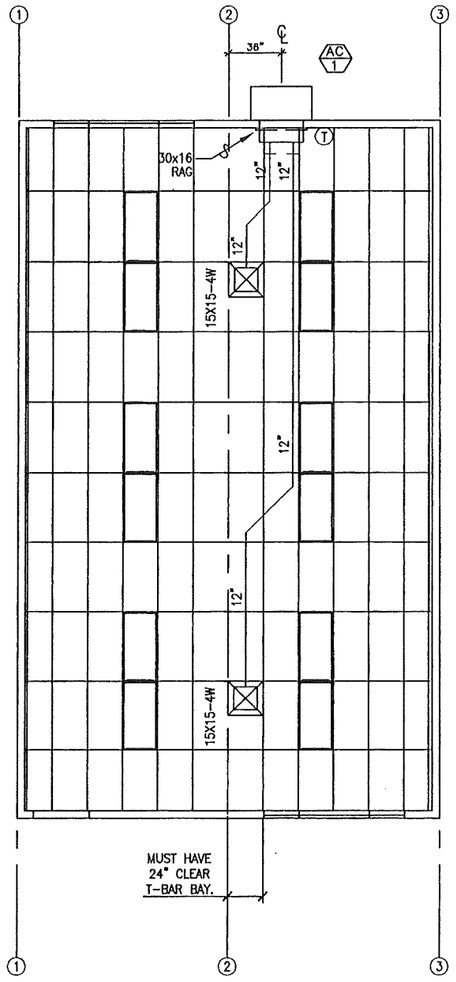

AIR CONDITIONING PLAN VIEW 24'X40' BUILDING

TYP. OF 1 BUILDING.

SCALE: 1/4" = 1'-0"

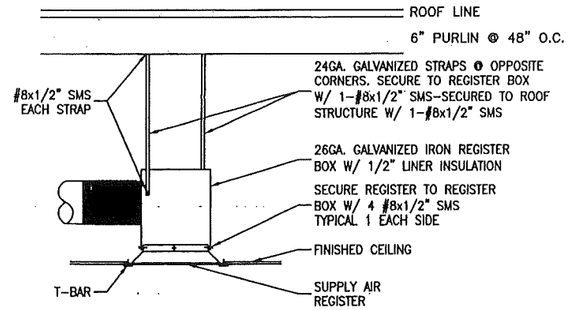

REGISTER BOX DETAIL

N.T.S.

EQUIPMENT & MATERIAL SCHEDULE

AC 1 MARVAIR MODEL# AVP42HPA05NB WALL MOUNTED HEAT PUMP
42,500 BTUH COOLING, SEER = 10.20
42,500 BTUH HEATING, HSPF = 6.60
1,400 CFM NOMINAL @.2"S.P.,WT. = 545 LBS.
208/230v-1PH-60CY, MAX. F.L.A. = 48.53 AMPS
WITH FACTORY MOTORIZED DAMPER

SUPPLY AIR PLENUM: GALV. IRON SHEETS W/ 1/2" LINER INSULATION

INTERIOR DUCTWORK:FLEX DUCT CLASS 1 UL-181

REGISTER BOXES: GALV. IRON SHEETS W/ 1/2" LINER INSULATION

SUPPLY AIR REGISTERS: METALAIRE '7650-6' SERIES

RETURN AIR GRILLES: METALAIRE 'RH' SERIES

THERMOSTAT: WHITE RODGERS '1F92' SERIES

ATTACH ALL SUPPLY AND RETURN AIR REGISTERS TO REGISTER BOXES WITH 4-#8x1/2" S.M.S. - ATTACH REGISTER BOX TO ROOF STRUCTURE WITH 2-1 1/2" GALV. STRAPS AT OPPOSITE CORNERS

LEGEND AND ABBREVIATIONS

	SUPPLY DUCT		DIRECTIONAL AIR FLOW
	RETURN DUCT		BAROMETRIC RELIEF DAMPER THRU WALL
12"	NUMBER INDICATES DUCT SIZE	UCD	UNDERCUT DOOR
	RETURN REGISTER	R	BAROMETRIC RELIEF DAMPER THRU ROOF
	RETURN REGISTER	T	THERMOSTAT
	SUPPLY REGISTER		DAMPER
	EXHAUST FAN		EQUIPMENT CALLOUT: TOP = EQUIPMENT TYPE BOTTOM = IDENTIFICATION
	12"x12" HOLE THRU BEAM	E	ELECTRICAL LOCATION
	16"x12" HOLE THRU BEAM	CD	CONDENSATE DRAIN
	FIRE DAMPER	G	GAS LOCATION

IDENTIFICATION STAMP DIV. OF THE STATE ARCHITECT OFFICE OF REGULATION SERVICES
04 105337
AC FLS SS
DATE JUN 05 2003

MECHANICAL (HVAC) PLAN (12-LIGHTS)

SCALE: 1/4" = 1'-0"

DATE SIGNED APR 30 2003

PC

CBC 2001

REVISIONS	Electrical Engineer's Seal	Mechanical Engineer's Seal	PC Professional of Record Seal	Architects Seal
1				
2				
3				
4				
5				

IDENTIFICATION STAMP DIV. OF THE STATE ARCHITECT OFFICE OF REGULATION SERVICES
PC-04
104801
AC FLS SS
DATE 5/2/03

MODTECH™ INC.
2830 BARRETT AVENUE PH (909) 943-4014
PERRIS, CALIF. 92571 FAX (909) 940-0427

PROJECT NUMBER: 4562

© MODTECH, INC. 2002

DRAWN BY: dt.
DATE: 6-02-03
CHECKED BY:
DATE:

MODTECH Index No.

MECHANICAL (HVAC) PLAN (12 LIGHTS)

M1.03

FILE PATH: 2440-M1.03.DWG

PROJECT NO. 4562

PC-04-104801

ELECTRICAL PANEL SCHEDULE

MAIN: 100 AMP 12 POLE | PANEL: A | LOCATION: REAR/INTERIOR | FEED: REAR | MOUNTING: FLUSH

LOAD	WATTS A∅	WATTS B∅	BREAKER Amps	BREAKER P	CKT	A	B	CKT	BREAKER P	BREAKER Amps	WATTS A∅	WATTS B∅	LOAD
RECEPTACLE	720		20	1	1			2	2	60	7080		HVAC (3 1/2T)
RECEPTACLE/CLOCK		900	20	1	3			4	–	–		7080	HVAC (3 1/2T)
					5			6					
					7			8					
INT/EXT LIGHTS	900		20	1	9			10					
INT. LIGHTS		840	20	1	11			12	–	–	40		FIRE ALARM (DEDICATED)
WATTS/PHASE A = 8740	1620	1740									7120	7080	B = 8820 WATTS/PHASE
TOTAL 17560 WATTS	73 AMPS				120/240 VOLTS				SINGLE ∅				THREE WIRE

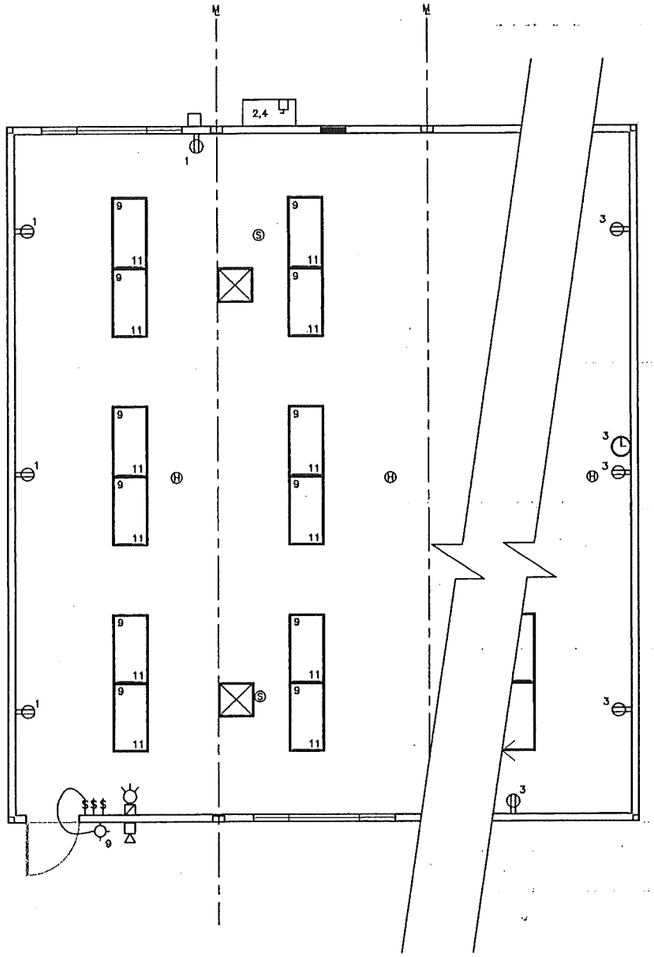

ELECTRICAL PLAN (12–LIGHTS)

SCALE: 1/4" = 1'-0"

DATE SIGNED APR 18 2003

PC

CBC 2001

GENERAL GROUNDING NOTES

1. EACH BUILDING SHALL BE SEPARATELY GROUNDED WITH A 3/4" RD. X 8' COPPERCLAD STEEL GROUND ROD. WHERE ROCK BOTTOM IS ENCOUNTERED, ROD SHALL BE DRIVEN AT AN ANGLE NOT TO EXCEED 45 DEGREE'S FROM THE VERTICAL OR SHALL BE BURIED IN A TRENCH THAT IS AT LEAST 30" DEEP (BY SITE ELECTRICAL)
2. TESTING: TEST FOR RESISTANCE TO GROUND. IF RESISTANCE EXCEEDS 25 OHMS, INSTALL ADDITIONAL GROUND RODS SEPARATED AT LEAST 6'-0" UNTIL RESISTANCE IS REDUCED TO 25 OHMS OR LESS. (BY SITE ELECTRICAL)
3. APPROVAL OF THIS PLAN DOES NOT CONSTITUTE APPROVAL OF THIS FIRE ALARM FOR ALL SITES. THE FIRE ALARM SYSTEM AND/OR COMPONENTS MAYBE REQUIRED TO BE CHANGED DUE TO SITE LOCATION, EXISTING CONDITIONS OR INCOMPATIBLE COMPONENTS.
4. GROUND MG TEST SHALL BE DONE IN THE PRESENCE OF THE PROJECT INSPECTOR. ALL GROUNDING SHALL BE IN ACCORDANCE WITH CEC ARTICLE 250.

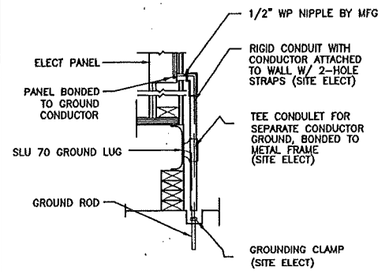

TYP GROUNDING DETAIL | 1

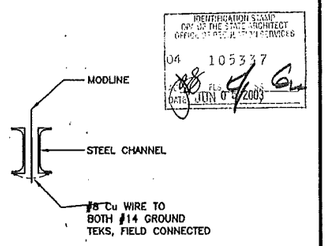

IDENTIFICATION STAMP DIV. OF THE STATE ARCHITECT OFFICE OF REGULATION SERVICES 04 105337 FLS SS DATE JUN 0 4 2003

GROUND JUMPER AT MOD LINE | 2

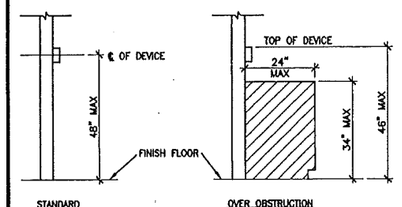

DEVICE MOUNTING | 3

ELECTRICAL LEGEND

- 2'x4' 4 TUBE FLUORESCENT LIGHT FIXTURE WITH T-8 ELECTRONIC BALLAST
- EXTERIOR LIGHT FIXTURE AT +93" AFF
- SWITCH AT +48" AFF
- 3WAY SWITCH AT +48" AFF UON
- DUPLEX WALL RECEPTACLE 15A 125V 3-WIRE AT +18" AFF UON
- HVAC UNIT (HV)
- 4SD J-BOX FOR FIRE ALARM PULL STATION AT +48" AFF, 3/4" CO TO ○ OR □ . PULLSTRING
- 4SD J-BOX FOR FIRE ALARM STROBE/HORN AT +80" TO BOTTOM OF DEVICE AFF. 3/4" CO TO ◁□ PULLSTRING.
- 4SD J-BOX FOR FIRE ALARM HORN AT +96" AFF 3/4" CO TO □ . PULLSTRING
- WEATHER PROOF GUTTER BOX (6"x6"x4") AT +18" AFF RECEIVE 3/4" CO FROM FA DEVICE, PULLSTRING
- ELECTRICAL PANEL AT +60" AFF TO CENTERLINE 1 1/4" POWER NIPPLE POC, GND JUMPER BY SITE ELECT
- CLOCK AT +90" AFF
- EXIT LIGHTED EXIT SIGN WITH BATTERY BACK UP (SEE NOTE 3 BELOW FOR CODE)
- (H) 4SD J-BOX FOR HEAT DETECTOR (ATTIC) MAX 35' FROM ANY POINT IN ATTIC BAY AND 50' BETWEEN THEM. * (TO BE SITE SPECIFIC)
- (S) 4SD J-BOX FOR SMOKE DETECTOR (CEILING) MAX 21' FROM ANY POINT IN ROOM AND 30' BETWEEN THEM. * (TO BE SITE SPECIFIC)

NOTES

NOTE FOR THE DESIGN PROFESSIONAL:
THE FOLLOWING INSTRUCTIONS ARE MEANT TO BE FOLLOWED. THE DESIGN PROFESSIONAL SHALL PROVIDE ANCHORAGE CALCULATIONS AND DETAILS WITH THE SUBMITTAL PACKAGE, USING THE FOLLOWING DESIGN CRITERIA AND SHOULD BE READY TO POINT OUT DURING THE BACKCHECK PROCESS TO THE PLAN REVIEWER ANY EQUIPMENT FOR WHICH ANCHORAGE DETAILS ARE NOT PROVIDED.

1. SCHOOL EQUIPMENT ANCHORAGE

INSTRUCTIONS

ALL EQUIPMENT/COMPONENTS DIRECTLY SUPPORTED ON THE GROUND OR ROOF WITH Wp EXCEEDING 400 lbs., EQUIPMENT WEIGHING MORE THAN 20 lbs. SUSPENDED FROM A ROOF, FLOOR OR HUNG FROM A WALL SHALL HAVE ITS CORRESPONDING STRUCTURAL CALCULATIONS AND ANCHORAGE DETAIL(S) SHOWN ON THE PLANS, PRIOR TO SUBMITTAL FOR PLAN REVIEW AND BACKCHECK. ALL EQUIPMENT (REGARDLESS OF WEIGHT) SHALL HAVE THEIR CONNECTION TO THE STRUCTURE SHOWN IN THE PLANS

DESIGN CRITERIA

a) THE SEISMIC ANCHORAGE FOR ALL MECHANICAL AND ELECTRICAL EQUIPMENT SHALL BE DESIGNED TO WITHSTAND A LATERAL FORCE:

1- CALCULATED AS SPECIFIED IN SECTION 1632A AND TABLE 16A-O OF THE VOL. 2, TITLE 24, 2001 CBC.

2- IN LIEU OF CALCULATIONS PER 1- THE ANCHORAGE SHALL BE CAPABLE OF WITHSTANDING A LATERAL FORCE EQUAL TO 2.2 Wp ACTING SIMULTANEOUSLY WITH A VERTICAL FORCE *EQUAL TO 0.72 Wp (BOTH FORCES AT SERVICE LEVEL. THESE VALUES CORRESPOND TO AN Ip=1.15 AND Ca=0.65, FOR OTHER VALUES OF Ip AND Ca, THE LATERAL AND VERTICAL FORCE CAN BE ADJUSTED ACCORDINGLY)

*INCLUSION OF VERTICAL FORCE PER TABLE 16-O FOOTNOTE 20 (FOR EMERGENCY POWER SUPPLIES AND COMMUNICATIONS EQUIPMENT ONLY)

b) THE CAPACITY OF THE ANCHORAGE CONNECTORS IN SHEAR AND/OR TENSION SHALL BE CLEARLY INDICATED IN THE CALCULATIONS, WHICH INDICATE, ICBO REPORT No. (IF APPLICABLE) THEIR TOTAL NUMBER, SIZE, GRADE, EMBEDMENT, EDGE DISTANCES, AND OTHER FACTORS WHICH AFFECT THE CAPACITY IN SHEAR TENSION.

ANCHORAGE DETAILS FOR EQUIPMENT WHICH ARE NOT APPROVED DURING PLAN REVIEW ARE SUBJECT TO APPROVAL OF THE STRUCTURAL ENGINEER OF RECORD AND DSA'S DISTRICT STRUCTURAL ENGINEER PRIOR TO INSTALLATION AND INSPECTION BY THE PROJECT INSPECTOR.

2. SMOKE AND HEAT DETECTORS SHOWN ARE FOR OPTIONAL AUTOMATIC DETECTION. IF ELECTED AS AN OPTION, MODTECH WILL PROVIDE 4SD BOXES AND ¾"CO. ON UNDERSIDE OF ROOF PURLINS. DEVICES PROVIDED AND INSTALLED BY OTHERS.
3. PROVIDE EXITS SIGNS AND EMERGENCY ILLUMINATION FIXTURES AS REQUIRED BY CBC 1003.2.8 AND CBC 1003.2.9
   EXIT SIGNS SHALL BE READILY VISIBLE FROM ANY DIRECTION OF APPROACH. EXIT SIGNS SHALL BE LOCATED AS NECESSARY TO CLEARLY INDICATE THE DIRECTION OF EGRESS TRAVEL. NO POINT SHALL BE MORE THAN 100 FEET FROM THE NEAREST VISIBLE SIGN.
   EXCEPTION: WHERE AN OCCUPANT LOAD IS LESS THAN 50

REVISIONS			Electrical Engineer's Seal	Mechanical Engineer's Seal	PC Professional of Record Seal	Architects Seal
1					REGISTERED PROFESSIONAL ENGINEER JAMES T. STANFORD STRUCTURAL STATE OF CALIFORNIA CERT#02 LICENSE EXPIRES 6-30-2004	
2						
3						
4						
5						

IDENTIFICATION STAMP DIV. OF THE STATE ARCHITECT OFFICE OF REGULATION SERVICES PC-04 104801 AC FLS SS DATE 5/21/03

MODTECH™ INC.
2830 BARRETT AVENUE
PERRIS, CALIF. 92571
PH (909) 943-4014
FAX (909) 940-0427

PROJECT NUMBER: 4562

© MODTECH, INC. 2002

DRAWN BY: dl. DATE: 6-02-03
CHECKED BY: DATE:

MODTECH Index No.

ELECTRICAL PLAN (12 LIGHTS) E1.03

PC-04-104801 PROJECT NO. 4562

FILE PATH: 2440-E1.03.DWG

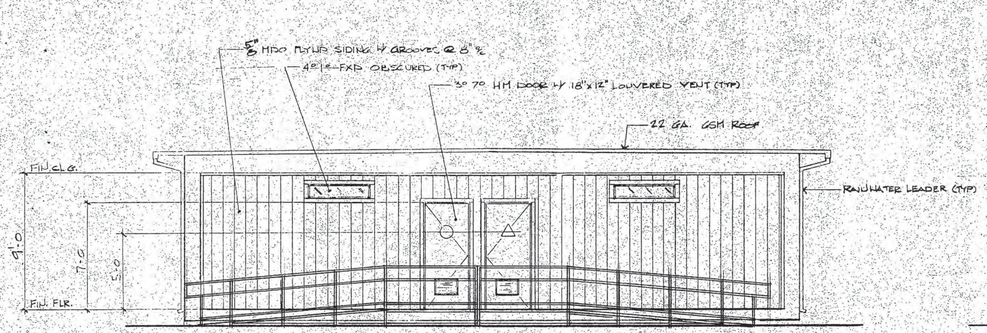

FRONT ELEVATION

SCALE: 1/4"=1'-0

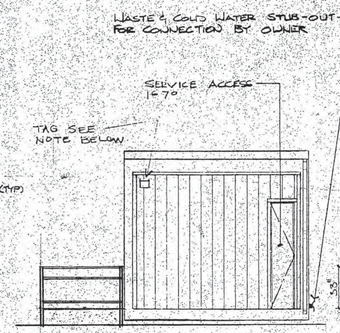

SIDE ELEVATION

SCALE: 1/4"=1'-0

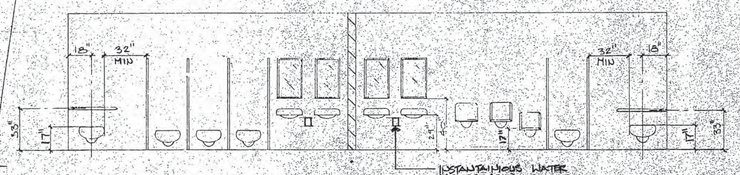

INTERIOR ELEVATION

SCALE: 1/4"=1'-0

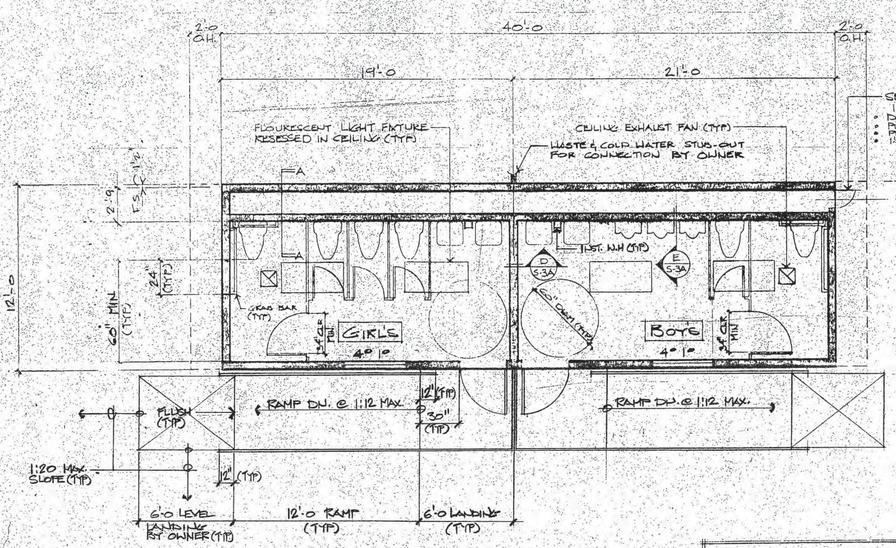

FLOOR PLAN

SCALE: 1/4"=1'-0

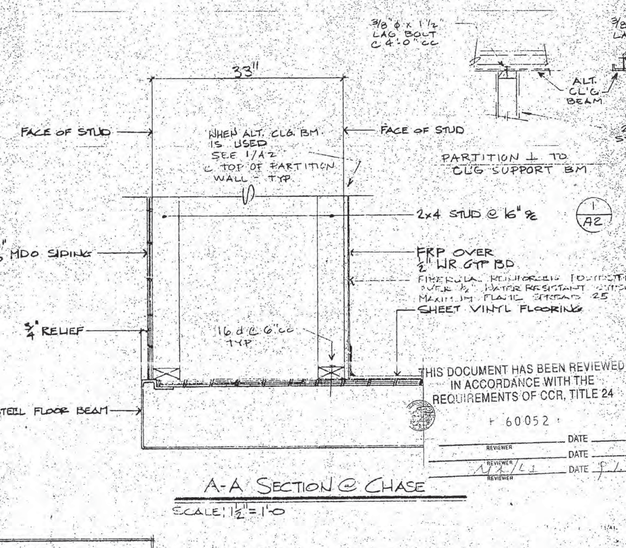

A-A SECTION @ CHASE

SCALE: 1½"=1'-0

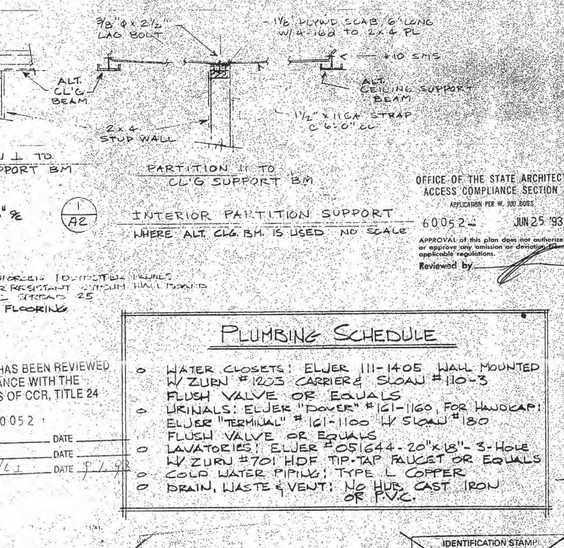

PARTITION ⊥ TO CL'G SUPPORT BM

PARTITION ∥ TO CL'G SUPPORT BM

INTERIOR PARTITION SUPPORT

WHERE ALT. CLG. BM. IS USED NO SCALE

OFFICE OF THE STATE ARCHITECT
ACCESS COMPLIANCE SECTION
APPLICATION PER W. 300 RULES
60052 JUN 25 '93
APPROVAL of this plan does not authorize or approve any omission or deviation from applicable regulations.
Reviewed by

PLUMBING SCHEDULE

- WATER CLOSETS: ELJER 111-1405 WALL MOUNTED W/ ZURN #1203 CARRIER & SLOAN #110-3 FLUSH VALVE OR EQUALS
- URINALS: ELJER "DOVER" #161-1160 FOR HANDICAP; ELJER "TERMINAL" #161-1100 W/ SLOAN #180 FLUSH VALVE OR EQUALS
- LAVATORIES: ELJER #051644-20"x18"- 3-HOLE W/ ZURU #701 HDF TIP-TAP FAUCET OR EQUALS
- COLD WATER PIPING: TYPE L COPPER
- DRAIN, WASTE & VENT: NO HUB CAST IRON OR PVC

OFFICE OF THE STATE ARCHITECT
ACCESS COMPLIANCE SECTION
APPLICATION PER W. 300 RULES
55332 JAN 31 '91
APPROVAL of this plan does not authorize or approve any omission or deviation from applicable regulations.
Reviewed by

NOTE:
MODULE SHALL HAVE PERMANENTLY ATTACHED TO EXTERIOR END A TAG GIVING OSA. APPL. #, AND MANUFACTURERS NAME AND SERIAL #, DESIGN FLOOR & ROOF DESIGN LOADS. MECHANICALLY ATTACH TAG TO MODULE

1-31-91

REGISTERED ARCHITECT EDWARD K. OSBORNE No. C 20877 EXP: 4/30/95 STATE OF CALIFORNIA

IDENTIFICATION STAMP
Department of General Services
Office of the State Architect
FEB 5 1991
Structural Safety Section
Application No. 55332
Rechecked By

IDENTIFICATION STAMP
DIV. OF THE STATE ARCHITECT
APP'D 115776
AC/H FLS SSS TN
DATE AUG 05 2014

REVISIONS	DATE	STATE FIRE MARSHAL	OFFICE OF THE STATE ARCHITECT	ARCHITECT	ENGINEER
		Structural Safety Section DC-133 Bldg. 1 SAC			

OFFICE OF THE STATE ARCHITECT ACCESS COMPLIANCE SECTION
DC 133 JUN 27 '90
APPLICATION PER W. 300 RULES

RELOCATABLE RESTROOM
GLENDALE SCHOOL DISTRICT

STEELGARD, INC.
15700 So. McKinley Ave.
Lathrop, California 95330
(209) 858-2101

DRAWN
DATE 12-24-90
CHECKED
APPROVED
PROJECT 90-38-15

A-2

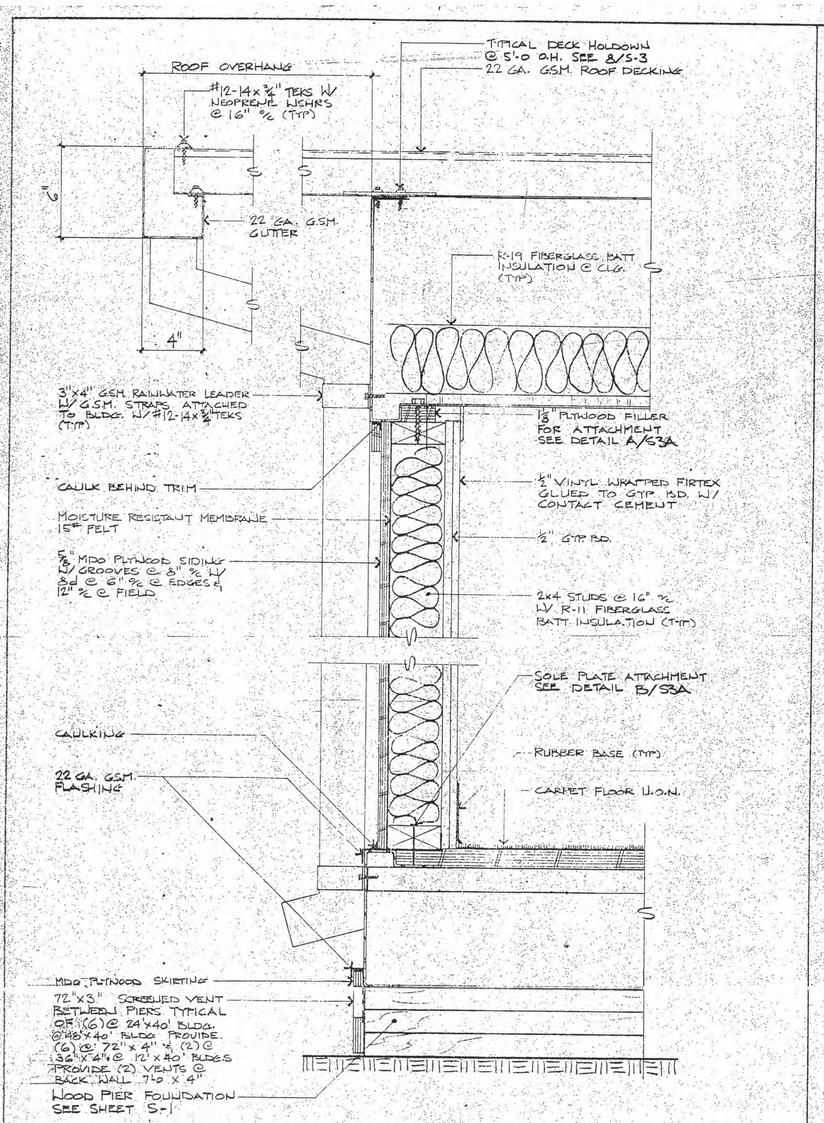

OFFICE OF THE STATE ARCHITECT
ACCESS COMPLIANCE SECTION
APPLICATION PER W. AND BOIES
55332 JAN 31 '91
APPROVAL of this plan does not authorize or approve any omission or deviation from applicable regulations.
Reviewed by

1 / A-3 WALL SECTION
SCALE: 3"=1'-0

NOTE: SEE SHEET S-3A FOR SHEAR WALL CONNECTIONS AT RESTROOM BUILDINGS

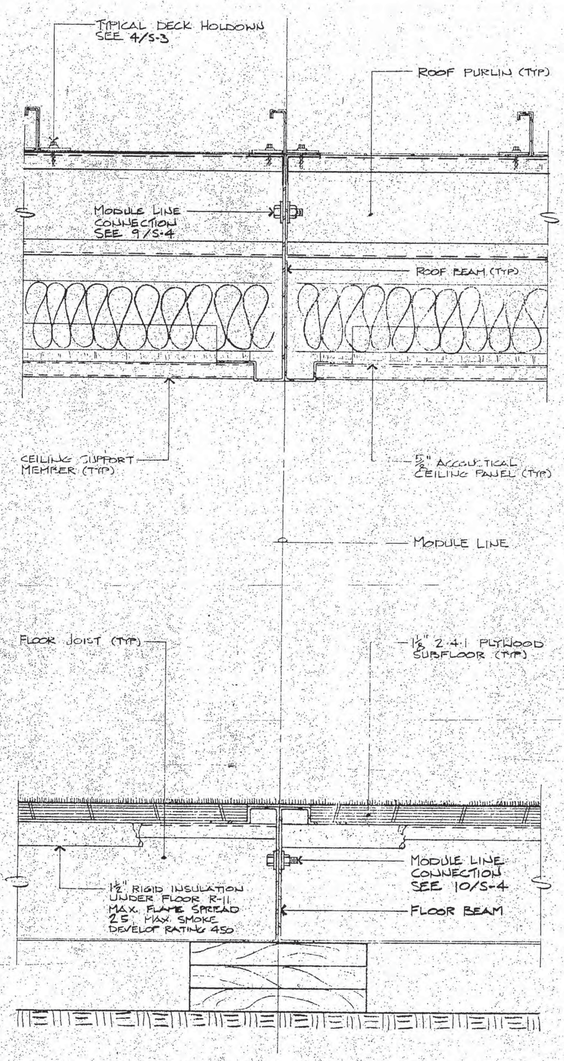

2 / A-3 SECTION @ MODULE LINE (REFERENCE ONLY)
SCALE: 3"=1'-0

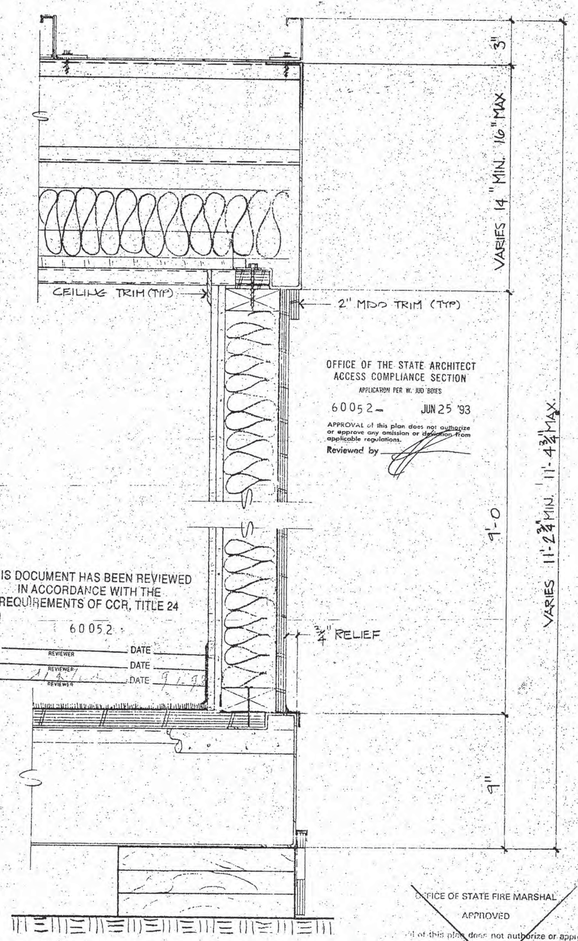

OFFICE OF THE STATE ARCHITECT
ACCESS COMPLIANCE SECTION
APPLICATION PER W. AND BOIES
60052 JUN 25 '93
APPROVAL of this plan does not authorize or approve any omission or deviation from applicable regulations.
Reviewed by

THIS DOCUMENT HAS BEEN REVIEWED IN ACCORDANCE WITH THE REQUIREMENTS OF CCR, TITLE 24
60052
REVIEWER DATE
REVIEWER DATE
REVIEWER DATE 9/1/93

IDENTIFICATION STAMP
DIV. OF THE STATE ARCHITECT
APP03 115776
AQ TN FLS SS TN
DATE AUG 05 2014

IDENTIFICATION STAMP
Department of General Services
Office of the State Architect
FEB 15 1991
Structural Safety Section
Appl. # 55332
Backchecked By

3 / A-3 WALL SECTION
SCALE: 3"=1'-0

OFFICE OF STATE FIRE MARSHAL
APPROVED
Approval of this plan does not authorize or approve any omission or deviation from applicable regulations. Approval is subject to field inspection. Approval of approved plans shall be available on the premises at all times.
Reviewed by: 1-31-91

REGISTERED ARCHITECT EDWARD K. OSBORN No. C 20877 EXP. 4/30/95 STATE OF CALIFORNIA

REVISIONS	DATE	STATE FIRE MARSHAL	OFFICE OF THE STATE ARCHITECT	ARCHITECT / ENGINEER

RELOCATABLE RESTROOM
GLENDALE SCHOOL DISTRICT

STEELGARD, INC.
15700 So. McKinley Ave.
Lathrop, California 95330
(209) 858-2101

DRAWN
DATE 3-5-90
CHECKED
APPROVED
PROJECT 90-018-93

A-3

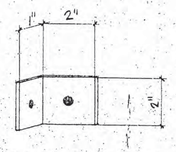

11 GA. ANCHOR CLIP
NO SCALE

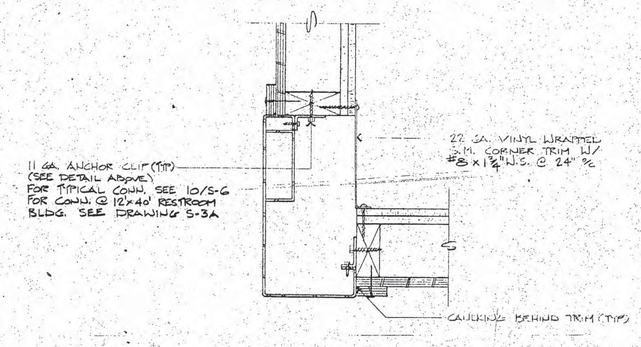

1 A-4 SECTION @ CORNER COLUMN
SCALE: 3"=1'-0

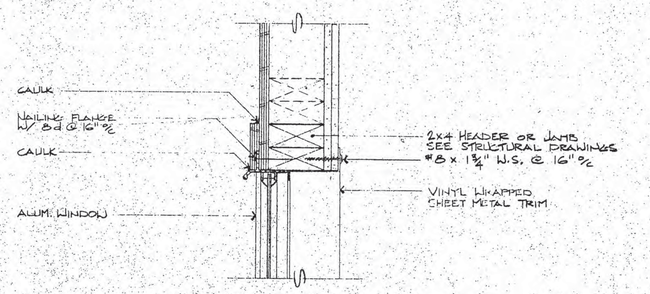

2 A-4 WINDOW HEAD (JAMB SIM.)
SCALE: 3"=1'-0

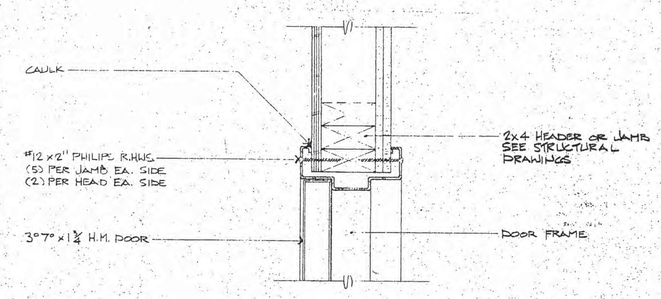

3 A-4 DOOR HEAD (JAMB SIM.)
SCALE: 3"=1'-0

OFFICE OF THE STATE ARCHITECT
ACCESS COMPLIANCE SECTION
APPLICATION PER W. JUD BOXES
60052 JUN 25 '93
APPROVAL of this plan does not authorize or approve any omission or deviation from applicable regulations.
Reviewed by

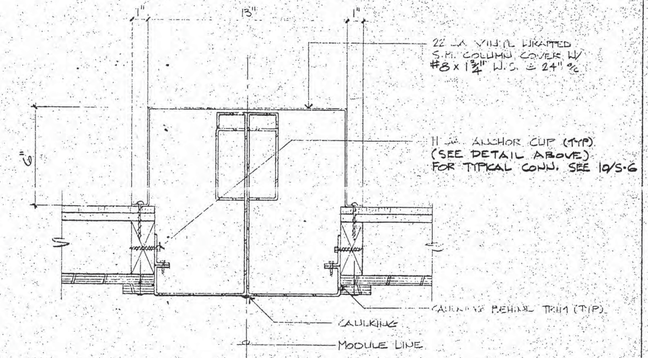

4 A-4 SECTION @ MODULE LINE COLUMN (REFERENCE ONLY)
SCALE: 3"=1'-0

OFFICE OF THE STATE ARCHITECT
ACCESS COMPLIANCE SECTION
APPLICATION PER W. JUD BOXES
55332 JAN 31 '91
APPROVAL of this plan does not authorize or approve any omission or deviation from applicable regulations.
Reviewed by

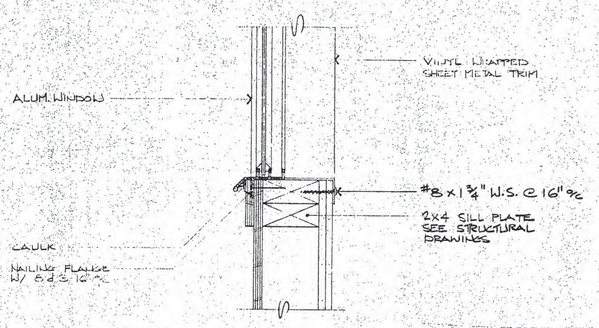

5 A-4 WINDOW SILL
SCALE: 3"=1'-0

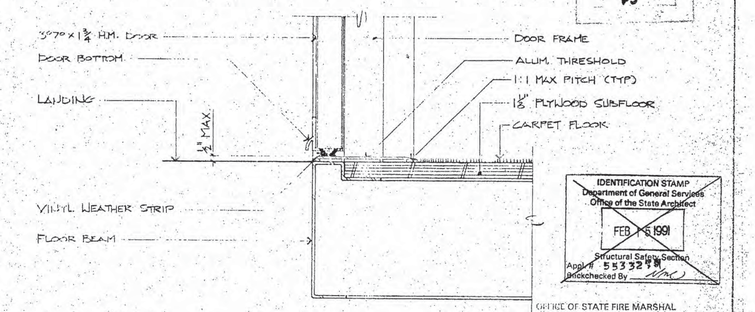

6 A-4 DOOR SILL
SCALE: 3"=1'-0

IDENTIFICATION STAMP
Department of General Services
Office of the State Architect
FEB 15 1991
Structural Safety Section
Appl # 55332
Blockchecked By

OFFICE OF STATE FIRE MARSHAL
APPROVED
Approval of this plan does not authorize or approve any omission or deviation from applicable regulations. Final approval is subject to field inspection. One set of approved plans shall be available on the project site at all times.
Reviewed by: 1-31-91

THIS DOCUMENT HAS BEEN REVIEWED IN ACCORDANCE WITH THE REQUIREMENTS OF CCR, TITLE 24
60052
REVIEWER DATE
REVIEWER DATE
REVIEWER DATE

REGISTERED ARCHITECT
EDWARD K. OSBORN
No. C 20877
EXP. 4/30/95
STATE OF CALIFORNIA

IDENTIFICATION STAMP
DIV. OF THE STATE ARCHITECT
APP03 115776
AC FLS SS TN
DATE AUG 05 2014

REVISIONS	DATE	STATE FIRE MARSHAL	OFFICE OF THE STATE ARCHITECT	ARCHITECT / ENGINEER

RELOCATABLE RESTROOM
GLENDALE SCHOOL DISTRICT

STEELGARD, INC.
15700 So. McKinley Ave.
Lathrop, California 95330
(209) 858-2101

DRAWN
DATE 3-5-90
CHECKED
APPROVED
PROJECT 93-

A-4

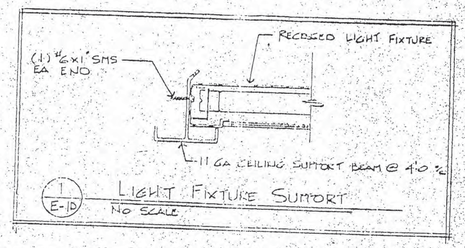

1/E-1D LIGHT FIXTURE SUPPORT
NO SCALE

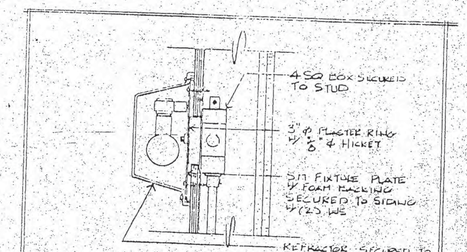

2/E-1D EXTERIOR LIGHT
NO SCALE

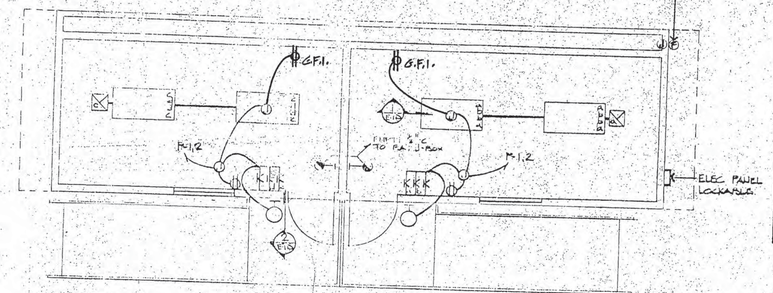

REST ROOM ELECTRICAL FLOOR PLAN
SCALE: 1/4"=1'-0

30A MAIN BKR 120/240 V 1Ø 3 WIRE MIN. WIR								
#	DES	KW	BKR	#	BKR	KW	DES	#
1	LTG	.75	20/1			.76	RECP	2
3								4
5								6

TOTAL KW 1.11

PANEL DIAGRAM

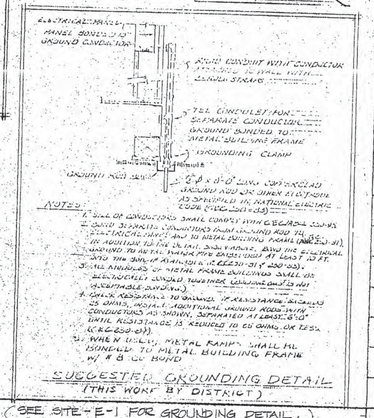

(SEE SITE-E-1 FOR GROUNDING DETAIL.)

SYMBOL	DESCRIPTION
	FLOURESCENT LIGHT FIXTURE, RECESSED IN CEILING W/ (4) 35 W TUBES
	INCANDESCENT EXTERIOR LIGHT FIXTURE, WALL MTD. W/ (1) 60 W BULB.
	DUPLEX OUTLET @ + 12"
	CEILING EXHAUST FAN
	ELECTRICAL JUNCTION BOX
	KEYED SWITCH
	4 SQ. 1 GANG W/ 3/4 RING @ + 7'-6" FOR FUTURE FIRE ALARM VISUAL WARNING DEVICE

IDENTIFICATION STAMP
DIV. OF THE STATE ARCHITECT
APP'D: 115776
AC: FLS SS TN
DATE: AUG 05 2014

OFFICE OF THE STATE ARCHITECT
ACCESS COMPLIANCE SECTION
APPLICATION PER W. 300 RIDES
60052 JUN 25 '93
APPROVAL of this plan does not authorize or approve any omission or deviation from applicable regulations.
Reviewed by

THIS DOCUMENT HAS BEEN REVIEWED IN ACCORDANCE WITH THE REQUIREMENTS OF CCR, TITLE 24
60052

REVIEWER DATE
REVIEWER DATE
REVIEWER DATE

IDENTIFICATION STAMP
Department of General Services
Office of the State Architect
FEB 5 1991
Structural Safety Section
Appl # 55332 FR
Plancheckked By

OFFICE OF THE STATE ARCHITECT
ACCESS COMPLIANCE SECTION
APPLICATION PER W. 300 RIDES
55332 JAN 31 '91
APPROVAL of this plan does not authorize or approve any omission or deviation from applicable regulations.
Reviewed by

Pc 13 55332 7990

REVISIONS	DATE	STATE FIRE MARSHAL	OFFICE OF THE STATE ARCHITECT	ENGINEER

Richard L. Barbee 1/17/89
ARCHITECT

REGISTERED ARCHITECT EDWARD K. OSBORNE NO. C 20877 EXP: 4/30/95 STATE OF CALIFORNIA

STEELGARD, INC.
15700 So. McKinley Ave.
Lathrop, California 95330
(209) 858-2101

DRAWN	[illegible]
DATE	12-23-88
CHECKED	
APPROVED	
PROJECT	88-076

ISSUE NO. DATE
1 OSA CORRECTIONS 2/24/89

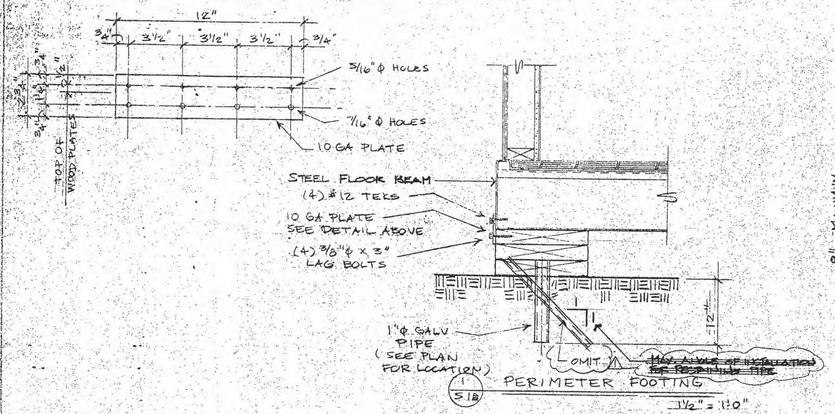

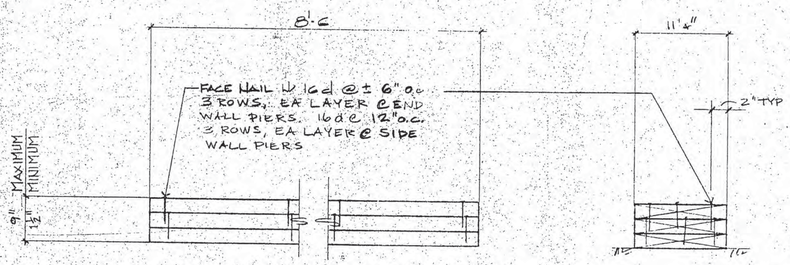

TYPICAL WOOD PIER
SCALE: 1 1/2" = 1'-0"

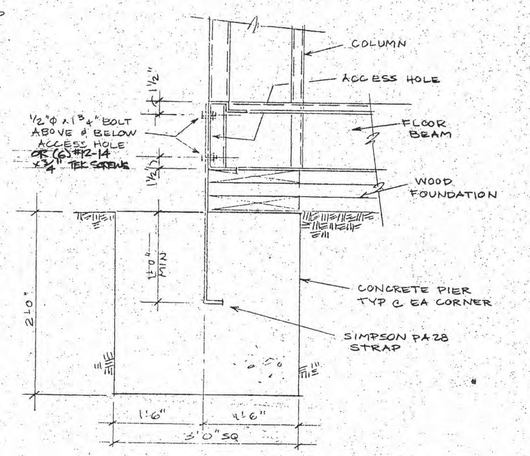

2 S1B CONCRETE ANCHOR
1 1/2" = 1'-0"

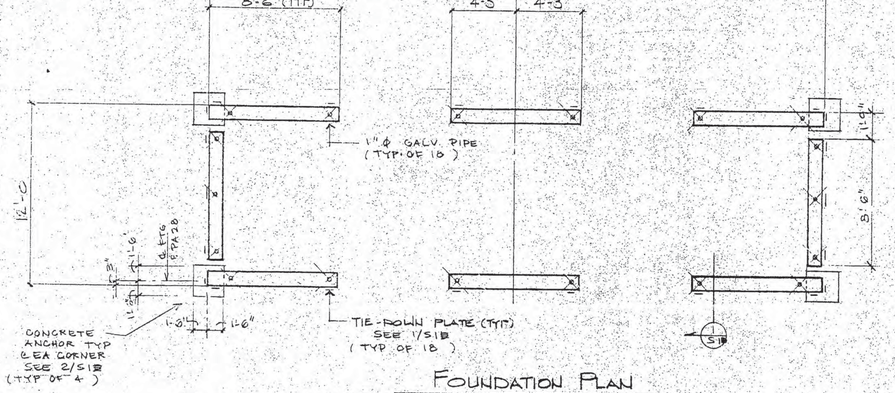

FOUNDATION PLAN
SCALE: 1/4" = 1'-0

GENERAL NOTES

- BOTTOM LAYER OF PIERS SHALL BE PTDF OR FOUNDATION GRADE REDWOOD.
- 16d NAILS SHALL BE CORROSIVE RESISTANT PER UBC STANDARD 25-17, SEC 25.1721
- SHIM PIERS AS REQUIRED WITH PLYWOOD OR SOLID STOCK. SHIMS SHALL BE CONTINUOUS ACROSS LENGTH OF PIER AS FIELD CONDITIONS ALLOW.
- SOIL BEARING PRESSURE IS ASSUMED AT 1,000 PSF

IDENTIFICATION STAMP
DIV. OF THE STATE ARCHITECT
APP03 115776
AC FLS SS TN
DATE AUG 3 2014

OFFICE OF THE STATE ARCHITECT
ACCESS COMPLIANCE SECTION
APPLICATOR PER W. JUD BOES
60052 JUN 25 '93
APPROVAL of this plan does not authorize or approve any omission or deviation from applicable regulations.
Reviewed by

THIS DOCUMENT HAS BEEN REVIEWED IN ACCORDANCE WITH THE REQUIREMENTS OF CCR, TITLE 24
60052
REVIEWER DATE
REVIEWER DATE
REVIEWER DATE

STRUCTURAL TESTS AND INSPECTIONS

REINFORCING STEEL	CONCRETE	GROUT	MORTAR	
Sample and test bar steel				Test of aggregates for mix design only
Sample and test mesh				Suitability tests of aggregates
Inspect placing at job				Mix designs
STRUCTURAL STEEL				Continuous batch plant inspection WAIVED BY STATE
X Sample and test as detailed below	X			Inspect placing (SHALL BE WAIVED)
Shop fabrication inspection				Sample
Field erection inspection	X			Compression tests
X Inspection of welds — Shop				Pick up samples at job
Inspection of welds — Field				Samples delivered to laboratory
Inspection of riveting or bolting — Shop				Deliver sample forms to jobsite
Inspection of riveting or bolting — Field				Sample and test cement
Sample and test high strength bolts and washers				

MIX DESIGNS: CONCRETE, GROUT, MORTAR OR GUNITE

MATERIAL	MAXIMUM SIZE	COMPRESSIVE STRENGTH, PSI, MINIMUM					
CONC	1 1/2"	2500 3000					

IDENTIFICATION STAMP
Department of General Services
Office of the State Architect
FEB 5 1991
Structural Safety Section
Appl. 55332
Checked By

List of structural steel members to be tested:
- STEEL FOR COLD FORMED STRUCTURAL MEMBERS
- UNIDENTIFIED ELEMENTS FOR COLUMNS AND BEAMS

Other Tests and Inspections: together with special instructions:
GROUNDING TEST

IDENTIFICATION STAMP
Department of General Services
Office of the State Architect
JAN 2 7 1992
Structural Safety Section
Appl # PSC-175
Checked By

Richard C. Staley C4799
ARCHITECT

ENGINEER

REVISIONS	DATE	STATE FIRE MARSHAL	OFFICE OF THE STATE ARCHITECT	ARCHITECT	ENGINEER

STEELGARD, INC.
15700 So. McKinley Ave.
Lathrop, California 95330
(209) 858-2101

DRAWN
DATE 1-25-92
CHECKED
APPROVED
PROJECT 90-078

S-1

OSA CORRECTIONS 8/26/93

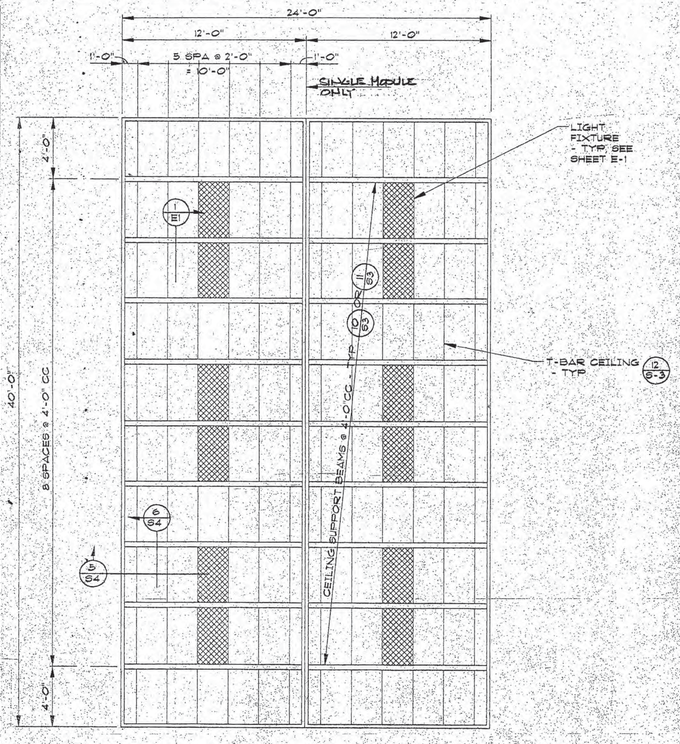

CEILING FRAMING PLAN

SCALE: 1/4"=1'-0"

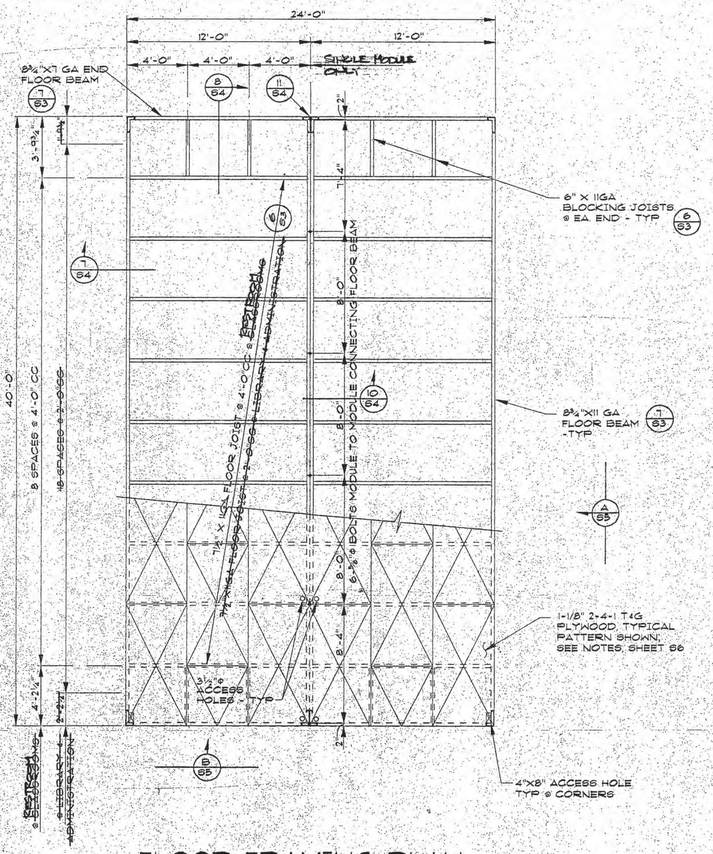

FLOOR FRAMING PLAN

SCALE: 1/4"=1'-0"

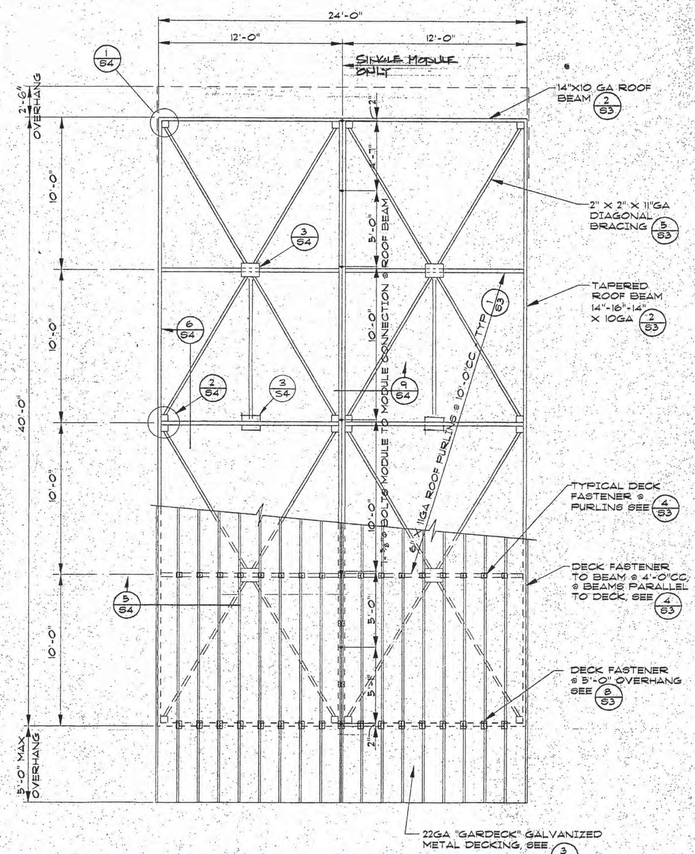

ROOF FRAMING PLAN

SCALE: 1/4"=1'-0"

STEEL NOTES:

1. LIGHT GAGE STEEL SHALL CONFORM TO ASTM A570.
   ROOF BEAMS & COLUMNS - GRADE 45
   ROOF PURLINS, ROOF DECK & FLOOR JOISTS - GRADE 36
   MINIMUM BEND RADIUS ON 11 GA & 10 GA COLD FORMED SECTIONS SHALL BE 3/16".
   STEEL GAGE SHALL BE AS SHOWN ON DETAILS.
   STEEL THICKNESS SHALL BE AS FOLLOWS;
   (TOLERANCE: -.005, +.010)
   11 GA .1196"
   10 GA .1345
   7 GA .1793"
   22 GA .0299"
2. HOT ROLLED STEEL SHAPES & PLATES SHALL BE ASTM A36.
3. BOLTS SHALL BE ASTM A307. HOLES SHALL BE 1/16" LARGER THAN BOLT DIAMETER. USE WASHERS UNDER BOLT HEAD & NUT.
4. WELDING SHALL BE DONE IN ACCORDANCE W/ UBC STANDARD 27-13 & AWS D1.3.
5. WELD INSPECTION SHALL BE DONE IN ACCORDANCE W/ TITLE 24, PART 2 CALIFORNIA CODE OF REGULATIONS 1989 AMENDMENTS.
6. FILLET WELD SIZES FOR LIGHT GAGE STEEL SHALL BE 1/8" U.N.O.
7. EXPOSED WELDS SHALL BE GROUND FLUSH W/ PARENT METAL. DO NOT OVERGRIND.
8. ALL STRUCTURAL STEEL SHALL RECIEVE ONE COAT OF SHOP PRIMER. FINISH PAINT PER SPECIFICATIONS.
9. ROOF DECK SHALL BE 3"X22 GA "GARDECK" GALVANIZED METAL DECKING. FOR DIMENSIONS, SEE SECTION 3/S3. FOR CONNECTIONS, SEE DETAILS 4/S3 & 8/S3.
10. NO HOLE SHALL BE CUT IN A STRUCTURAL MEMBER EXCEPT AS SPECIFICALLY SHOWN ON THESE DRAWINGS.
11. COLD FORMED STEEL SHALL CONFORM TO A570 AND HAVE THE FOLLOWING PROPERTIES:
    GRADE 36: MIN FY = 36.0 KSI, MIN ELONGATION = 21% IN 2 INCHES, 17% IN 8 INCHES
    GRADE 45: MIN FY = 45.0 KSI MIN ELONGATION = 18% IN 2 INCHES, 14% IN 8 INCHES

IDENTIFICATION STAMP
DIV. OF THE STATE ARCHITECT
APP03 115776
AC ✓ FLS SS TN
DATE AUG 05 2014

OFFICE OF THE STATE ARCHITECT
ACCESS COMPLIANCE SECTION
APPLICATION PER W. JUD BOYES
60052 - JUN 25 '93
APPROVAL of this plan does not authorize or approve any omission or deviation from applicable regulations.
Reviewed by

REGISTERED ARCHITECT EDWARD K. OSBORN No. C 20877 EXP 4/30/95 STATE OF CALIFORNIA

THIS DOCUMENT HAS BEEN REVIEWED IN ACCORDANCE WITH THE REQUIREMENTS OF CCR, TITLE 24
60052
REVIEWER DATE
REVIEWER DATE
REVIEWER DATE

IDENTIFICATION STAMP
Department of General Services
Office of the State Architect
FEB 5 1997
Structural Safety Section
Appl # 553278
Backchecked By

REVISIONS	DATE	STATE FIRE MARSHALL	OFFICE OF THE STATE ARCHITECT	ENGINEER	ARCHITECT

LICENSED ARCHITECT STATE OF CALIFORNIA NO. 14711 EXP. 8-31-94

RELOCATABLE RESTROOM
GLENDALE SCHOOL DISTRICT

20 PSF ROOF LIVE LOAD
SEISMIC ZONE 4 WIND SPEED = 80 MPH - EXPOSURE C

STEELGARD, INC.
15700 So. McKinley Ave.
Lathrop, California 95330
(209) 858-2101

DRAWN JB GMC
DATE 5-21-93
CHECKED
APPROVED
PROJECT 93-

S2

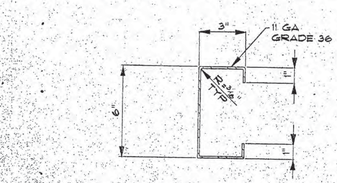

(1/S3) ROOF PURLIN SECTION
SCALE: 3"=1'-0"

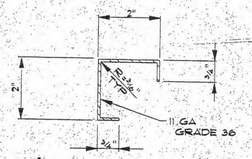

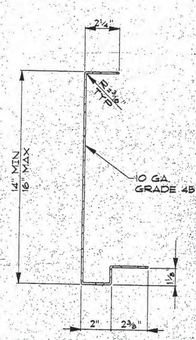

(2/S3) ROOF BEAM SECTION
SCALE: 3"=1'-0"

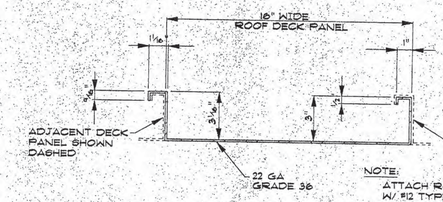

NOTE:
ATTACH ROOF DECK TO FRAMING W/ #12 TYPE A SMS W/ NEOPRENE WASHERS, SEE CONNECTION DETAILS (4/S3) + (8/S3)

(3/S3) GARDECK ROOF PANEL
SCALE: 3"=1'-0"

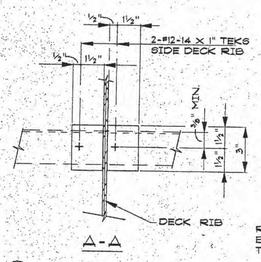

A-A

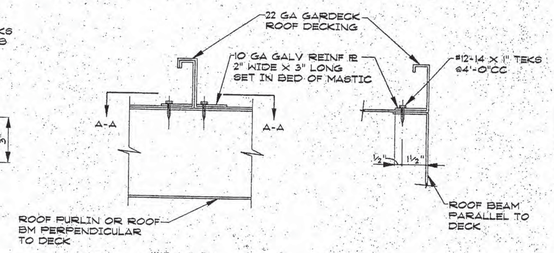

(4/S3) TYPICAL ROOF DECK CONNECTION
SCALE: 3"=1'-0"

(5/S3) DIAGONAL BRACE SECTION
SCALE: 3"=1'-0"

A-A

(6/S3) FLOOR JOIST SECTION
SCALE: 3" = 1'-0"

(7/S3) FLOOR BEAM SECTION
SCALE: 3" = 1'-0"

(8/S3) ROOF DECK CONNECTION @ 5'-0" OVERHANG
SCALE: 3"=1'-0"

(9/S3) COLUMN SECTION
SCALE: 3"=1'-0"

(10/S3) CEILING BEAM
SCALE: 3"= 1'-0"

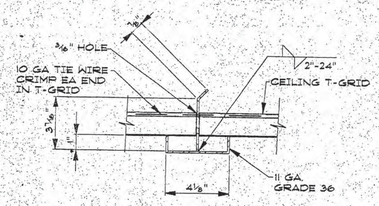

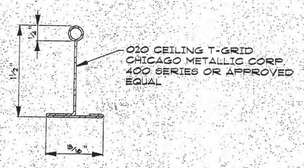

(11/S3) ALTERNATE CEILING BEAM
SCALE: 3"=1'-0"

(12/S3) CEILING T-GRID
SCALE: FULL

IDENTIFICATION STAMP
DIV. OF THE STATE ARCHITECT
APP03 115776
AC FLS SS TN
DATE AUG 05 2014

OFFICE OF THE STATE ARCHITECT
ACCESS COMPLIANCE SECTION
APPLICATION PER M. 300 RMFS
60052 - JUN 25 '93
APPROVAL of this plan does not authorize or approve any omission or deviation from applicable regulations.
Reviewed by

IDENTIFICATION STAMP
Department of General Services
Office of the State Architect
FEB 5 1991
Structural Safety Section
Appl # 55332 TN
Checked By

THIS DOCUMENT HAS BEEN REVIEWED IN ACCORDANCE WITH THE REQUIREMENTS OF CCR, TITLE 24
60052
REVIEWER DATE
REVIEWER DATE
REVIEWER DATE 7-25-93

REGISTERED ARCHITECT EDWARD K. OSBORNE No. C 20877 EXP: 1/30/95 STATE OF CALIFORNIA

REVISIONS	DATE	STATE FIRE MARSHALL	OFFICE OF THE STATE ARCHITECT	ENGINEER	ARCHITECT

RELOCATABLE RESTROOM
GLENDALE

20 PSF ROOF LIVE LOAD
SEISMIC ZONE 4 WIND SPEED = 80 MPH - EXPOSURE C

STEELGARD, INC.
15700 So. McKinley Ave.
Lathrop, California 95330
(209) 858-2101

DRAWN JB SMC
DATE 5-21-93
CHECKED
APPROVED
PROJECT 93-

S3

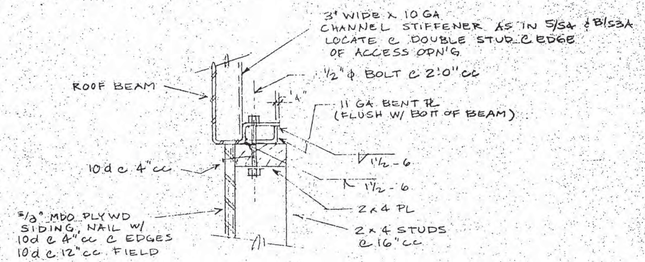

(A) S-3A SHEAR WALL TO ROOF BEAM
@ 12' END WALLS 3" = 1'-0"
12'x40' RESTROOM BLDG. ONLY

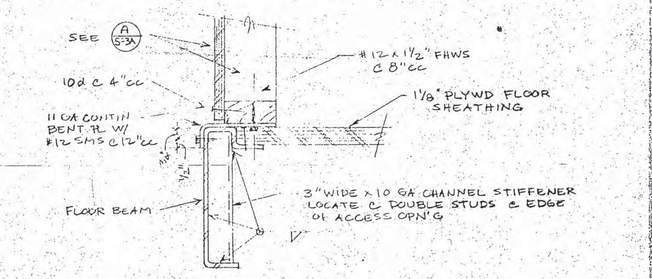

(B) S-3A SHEAR WALL TO FLOOR BEAM
@ 12' END WALLS 3" = 1'-0"
12'x40' RESTROOM BLDG ONLY

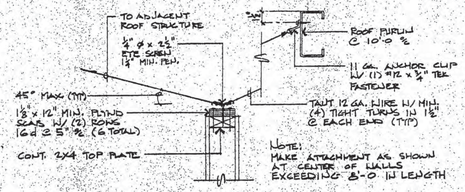

(D) S-3A TRANSVERSE INTERIOR WALL ATTACHMENT
SCALE: 1 1/2" = 1'-0

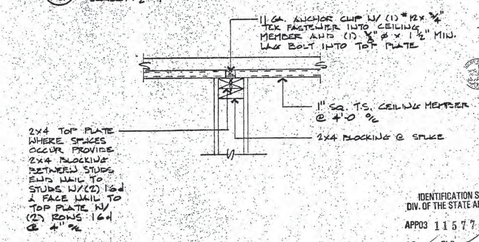

(E) S-3A LONGITUDINAL INTERIOR WALL ATTACHMENT
SCALE: 1 1/2" = 1'-0

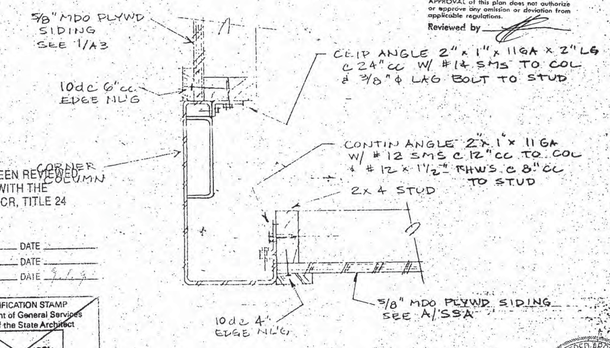

(C) S-3A SHEAR WALL TO COLUMN
@ 12' END WALLS 3" = 1'-0"
12'x40' RESTROOM BLDG ONLY

OFFICE OF THE STATE ARCHITECT
ACCESS COMPLIANCE SECTION
APPLICATION PER W. JUD BOIES
60052 JUN 25 '93
APPROVAL of this plan does not authorize or approve any omission or deviation from applicable regulations.
Reviewed by

THIS DOCUMENT HAS BEEN REVIEWED IN ACCORDANCE WITH THE REQUIREMENTS OF CCR, TITLE 24
60052
REVIEWER DATE
REVIEWER DATE
REVIEWER DATE

IDENTIFICATION STAMP
DIV. OF THE STATE ARCHITECT
APP03 115776
AC FLS SS TN
DATE AUG 05 2014

IDENTIFICATION STAMP
Department of General Services
Office of the State Architect
FEB 15 1991
Structural Safety Section
Appl # 55332
Unchecked By

REVISIONS	DATE	STATE FIRE MARSHAL	OFFICE OF THE STATE ARCHITECT	ARCHITECT / ENGINEER
				Richard V. Galvez C-6994
				Ralph E. Mylin SE2818

IDENTIFICATION STAMP
Department of General Services
Office of the State Architect
Structural Safety Section
Appl # 55332
Unchecked By

RELOCATABLE RESTROOM
GLENDALE SCHOOL DISTRICT

STEELGARD, INC.
15700 So. McKinley Ave.
Lathrop, California 95330
(209) 858-2101

DRAWN 5-21-93

S-3A

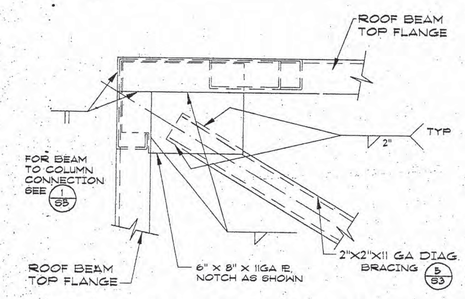

1/S4 DIAGONAL BRACE CONNECTION @ CORNER
SCALE: 3"=1'-0"

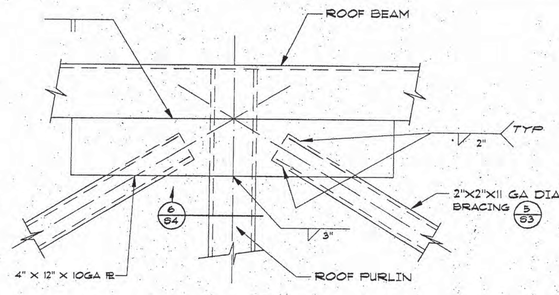

2/S4 DIAGONAL BRACE CONNECTION @ PURLIN & ROOF BEAM
SCALE: 3"=1'-0"

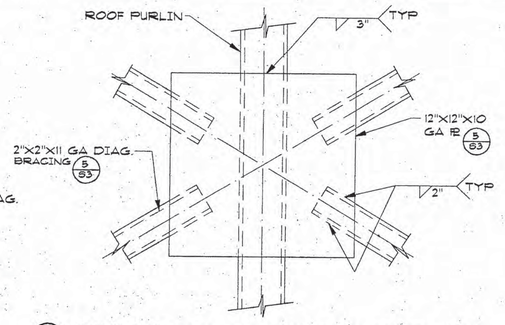

3/S4 DIAGONAL BRACE @ PURLIN
SCALE: 3"=1'-0"

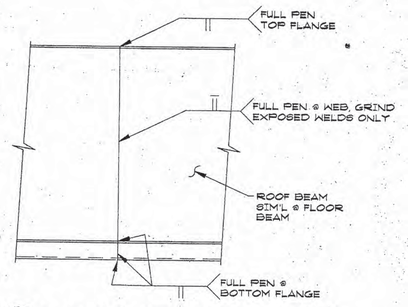

4/S4 BEAM SPLICE
SCALE: 3"=1'-0"

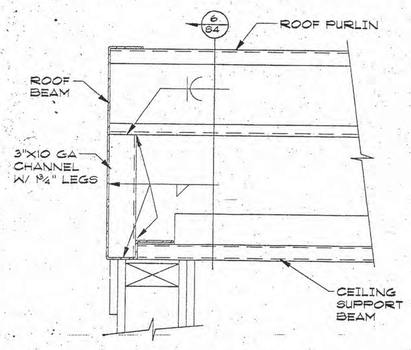

5/S4 ROOF BEAM SECTION @ PURLIN
SCALE: 3"=1'-0"

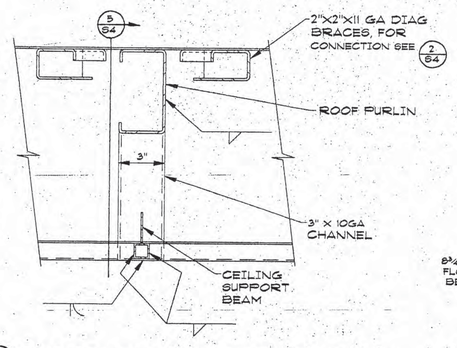

6/S4 ROOF PURLIN TO ROOF BEAM CONNECTION
SCALE: 3"=1'-0"

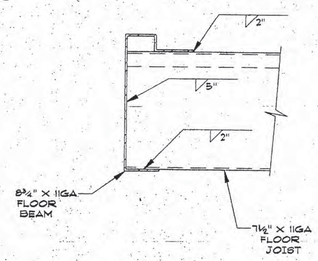

7/S4 FLOOR JOIST TO FLOOR BEAM CONNECTION
SCALE: 3"=1'-0"

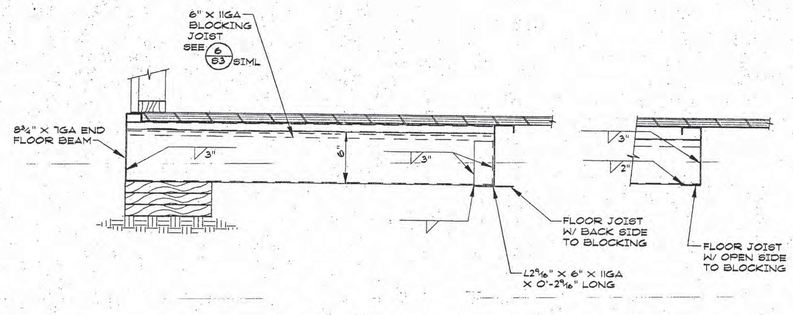

8/S4 BLOCKING JOIST CONNECTION
SCALE: 1½"=1'-0"

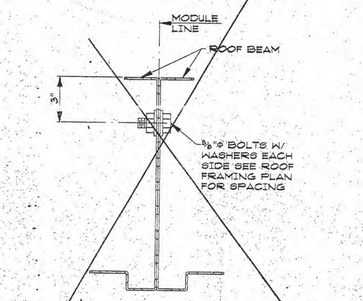

9/S4 ROOF BEAM TO ROOF BEAM @ MODULE LINE
SCALE: 3"=1'-0"

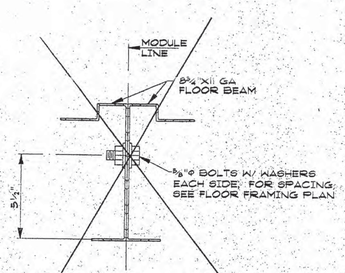

10/S4 FLOOR BEAM TO FLOOR BEAM @ MODULE LINE
SCALE: 3"=1'-0"

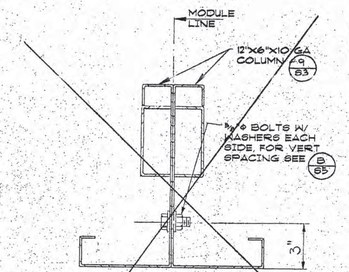

11/S4 COLUMN TO COLUMN @ MODULE LINE
SCALE: 3"=1'-0"

IDENTIFICATION STAMP
DIV. OF THE STATE ARCHITECT
APP03 115776
AC FLS SS TN
DATE AUG 05 2014

OFFICE OF THE STATE ARCHITECT
ACCESS COMPLIANCE SECTION
APPLICATION PER M. 100 RDES
60052 - JUN 25
APPROVAL of this plan does not authorize or approve any omission or deviation from applicable regulations.
Reviewed by

IDENTIFICATION STAMP
Department of General Services
Office of the State Architect
FEB 6 1991
Structural Safety Section
App'd 553324M
Rechecked By

THIS DOCUMENT HAS BEEN REVIEWED IN ACCORDANCE WITH THE REQUIREMENTS OF CCR, TITLE 24
60052
REVIEWER DATE
REVIEWER DATE
REVIEWER DATE

EDWARD K. OSBORN No. C 20877 EXP. 4/30/95 REGISTERED ARCHITECT STATE OF CALIFORNIA

REVISIONS	DATE	STATE FIRE MARSHALL	OFFICE OF THE STATE ARCHITECT	ARCHITECT	RELOCATABLE RESTROOM GLENDALE SCHOOL DISTRICT	STEELGARD, INC. 15700 So. McKinley Ave. Lathrop, California 95330 (209) 858-2101	DRAWN JB SMC DATE 5-21-93 CHECKED APPROVED PROJECT 93-
				ENGINEER	20 PSF ROOF LIVE LOAD SEISMIC ZONE 4 WIND SPEED = 80 MPH - EXPOSURE C		S4

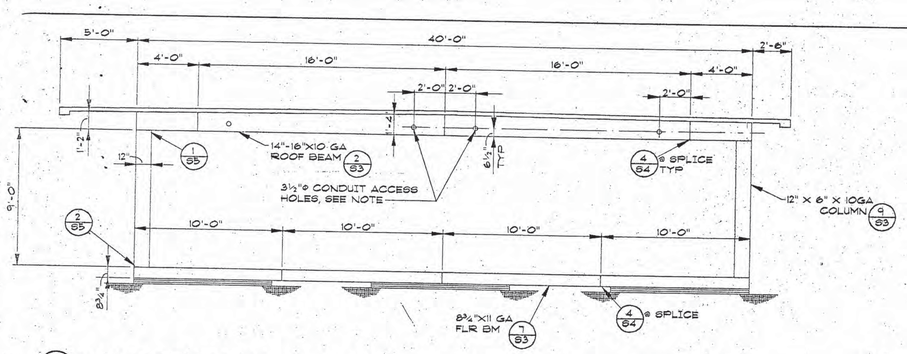

A/S5 LONGITUDINAL FRAME ELEVATION @40'-0" WALL

SCALE: 1/4" = 1'-0"

NOTE: 3½"ø CONDUIT ACCESS HOLES SHALL BE LOCATED IN ROOF BEAM AS SHOWN. ADDITIONAL ACCESS HOLES MAY BE LOCATED AS REQD 6½" FROM BOTTOM FLANGE OF BEAM. 12" MINIMUM FROM COLUMN ℄ BEAM SPLICES ℄ 24"CC MINIMUM BETWEEN HOLES.

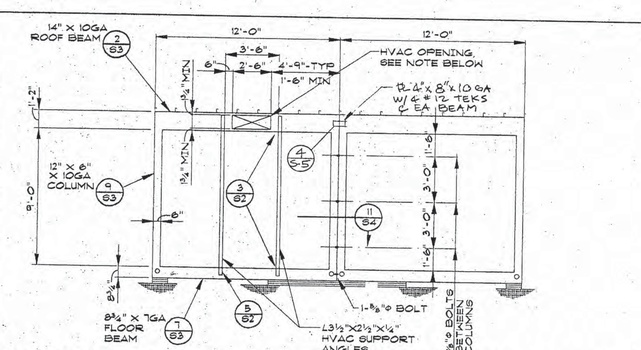

B/S5 TRANSVERSE FRAME ELEVATION @12'-0" WALL

SCALE: 1/4" = 1'-0"

NOTE: HVAC DUCT OPENING IN ROOF BEAM SHALL OCCUR IN 2'-6" OVERHANG END OF MODULE ONLY. IN LIEU OF OPENING IN ROOF BEAM, DUCT OPENING MAY BE LOCATED IN WALL BELOW ROOF BEAM. SEE FRAMING ELEVATIONS.

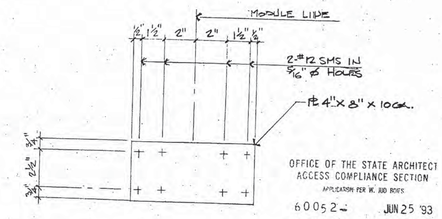

OFFICE OF THE STATE ARCHITECT
ACCESS COMPLIANCE SECTION
APPLICATION PER W. 300 BOES
60052 JUN 25 '93
APPROVAL of this plan does not authorize or approve any omission or deviation from applicable regulations.
Reviewed by

4/S5 MODULE LINE TIE PLATE

SCALE: 3" = 1'-0"

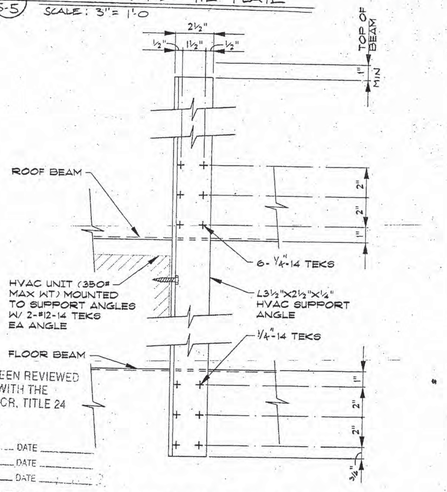

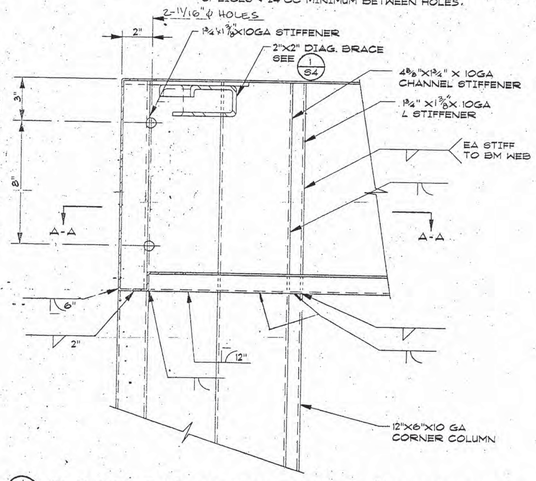

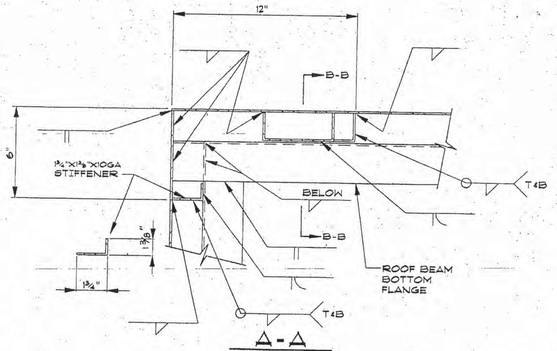

A-A

SCALE: 3"=1'-0"

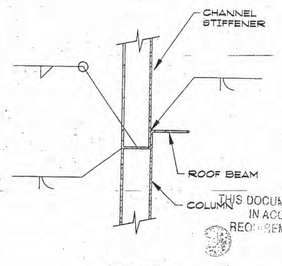

B-B

SCALE: 3"=1'-0"

THIS DOCUMENT HAS BEEN REVIEWED IN ACCORDANCE WITH THE REQUIREMENTS OF CCR, TITLE 24
60052
REVIEWED DATE
REVIEWED DATE
REVIEWED DATE

1/S5 ROOF BEAM TO CORNER COLUMN

SCALE: 3" = 1'-0"

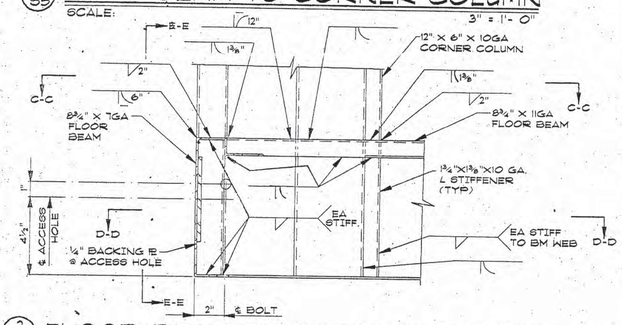

2/S5 FLOOR BEAM TO CORNER COLUMN

SCALE: 3" = 1'-0"

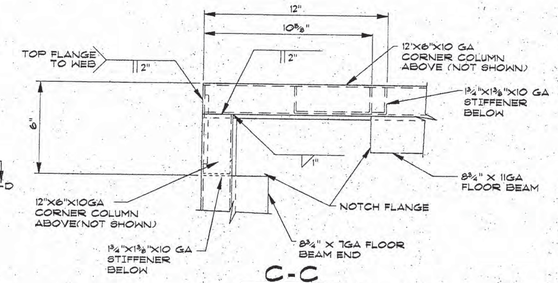

C-C

SCALE: 3"=1'-0"

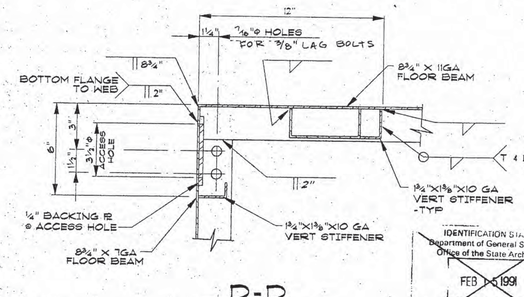

D-D

SCALE: 3"=1'-0"

IDENTIFICATION STAMP
Department of General Ser...
Office of the State Architect
FEB 5 1991
Structural Safety Section
Appl. # 51332
Plancheck by

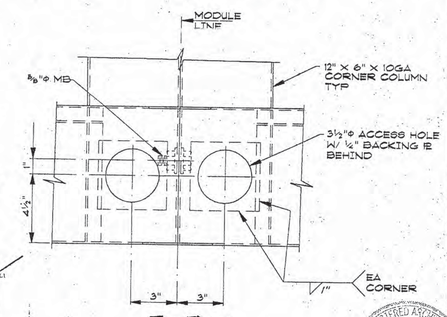

E-E

SCALE: 3"=1'-0"

REGISTERED ARCHITECT EDWARD K. OSBORN No. C20877 EXP: 4/30/95

NOTE: ALL FILLET WELDS ARE ⅛" U.N.O. STIFFENER PLATES ARE GRADE 45 STEEL.

3/S5 HVAC SUPPORT ANGLES

SCALE: 3" = 1'-0"

REVISIONS	DATE	STATE FIRE MARSHALL	OFFICE OF THE STATE ARCHITECT	ENGINEER	
				LICENSED ARCHITECT SCOTT C. CALLAHAN No. 18211 REGISTERED ARCHITECT	

RELOCATABLE RESTROOM
GLENDALE SCHOOL DISTRICT

20 PSF ROOF LIVE LOAD
SEISMIC ZONE 4 WIND SPEED = 80 MPH - EXPOSURE C

STEELGARD, INC.
15700 So. McKinley Ave.
Lathrop, California 95330
(209) 858-2101

DRAWN JB SMc
DATE 5-21-93
CHECKED
APPROVED
PROJECT 93-

S5

IDENTIFICATION STAMP
DIV. OF THE STATE ARCHITECT
APP03 115776
AC / FLS / SS TN
DATE AUG 05 2019

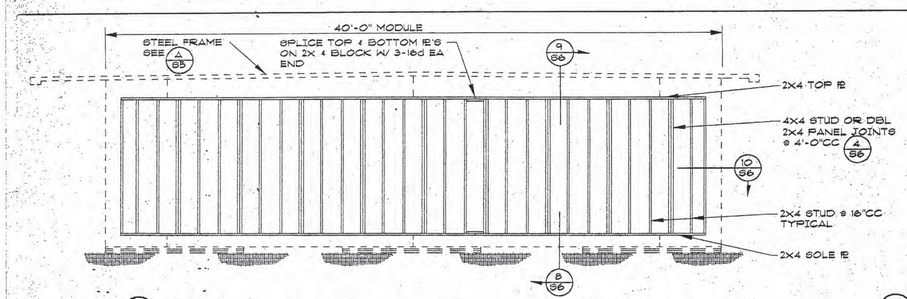

1/S6 WALL FRAMING @ 40'-0" SIDEWALL
SCALE: 1/4" = 1'-0"

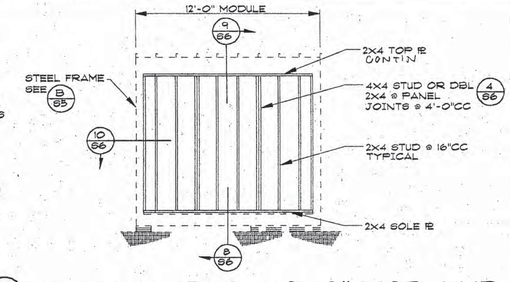

2/S6 WALL FRAMING @ 12'-0" MOD. END
SCALE: 1/4" = 1'-0"

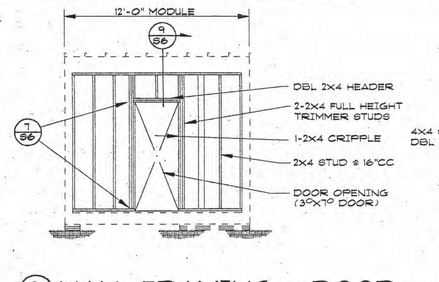

3/S6 WALL FRAMING @ DOOR
SCALE: 1/4" = 1'-0"

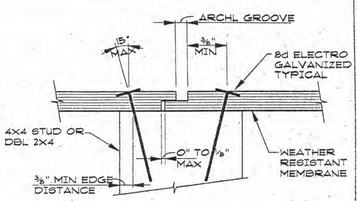

4/S6 PLYWOOD SPLICE @ JOINT
SCALE: 6" = 1'-0"

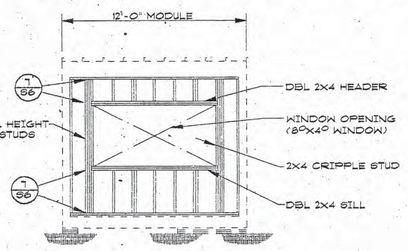

5/S6 WALL FRAMING @ WINDOW
SCALE: 1/4" = 1'-0"

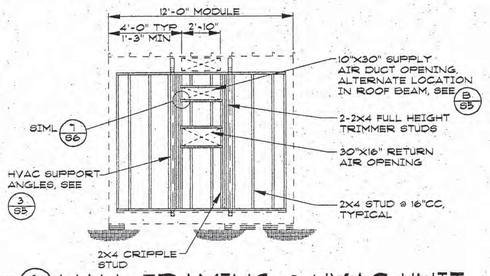

6/S6 WALL FRAMING @ HVAC UNIT
SCALE: 1/4" = 1'-0"

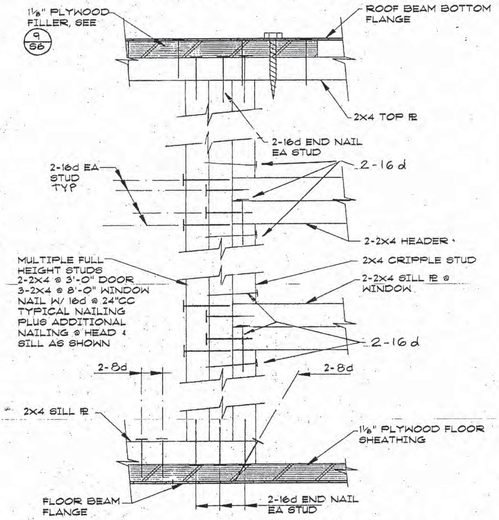

7/S6 WOOD FRAMING CONNECTIONS
SCALE: 3"=1'-0"

WOOD FRAMING NOTES:

1. ALL FRAMING SHALL BE DOUGLAS FIR LARCH NO.2 OR BETTER, U.N.O.
2. HOLES FOR BOLTS IN WOOD SHALL BE BORED WITH A BIT OF THE SAME NOMINAL DIAMETER AS THE BOLT PLUS 1/16".
3. HOLES FOR LAG SCREWS SHALL BE FIRST BORED TO THE SAME NOMINAL DIAMETER AND DEPTH AS THE SHANK AND THE REST NO LARGER THAN THE ROOT OF THE THREAD. LAG SCREWS AND WOOD SCREWS SHALL BE SCREWED AND NOT DRIVEN INTO PLACE. SOAP MAY BE USED TO LUBRICATE SCREWS. HOLES FOR 3/8"ø LAG SCREWS INTO PLYWOOD NEED NOT BE PREBORED.
4. ALL BOLTS AND LAG SCREWS SHALL BE PROVIDED WITH METAL WASHERS UNDER HEADS AND NUTS WHICH BEAR ON WOOD.
5. FLOOR SHEATHING SHALL BE 1 1/8" 2-4-1 APA CD INTERIOR PLYWOOD WITH EXTERIOR GLUE, GROUP 1, T&G EDGES. FASTEN TO FRAMING @ 6"CC @ PANEL EDGES, 10"CC @ INTERIOR SUPPORTS. FASTENERS SHALL BE ONE OF THE FOLLOWING TYPES. DO NOT MIX TYPES.
   A. AEROSMITH AK-144-01TB, .144"ØX1¾" LONG PNEUMATICALLY DRIVEN PINS
   B. TEKS SCREWS, #10X2" LONG
6. PLYWOOD SIDING SHALL BE 5/8" MDO APA PLYWOOD SIDING. NAIL TO FRAMING W/8d @ 6"CC @ EDGES, 8d @ 12"CC @ INTERMEDIATE STUDS. PROVIDE 4X4 STUD OR 2-2X4 STUDS @ VERTICAL PANEL EDGES. SEE DETAIL 4/S6. ALL PANEL EDGES SHALL BE BLOCKED.

NAILING SCHEDULE

NAILS FOR STRUCTURAL WORK SHALL CONFORM TO THE FOLLOWING:

SIZE	DIAMETER	STANDARD LENGTH	MINIMUM PENETRATION
8d (BOX)	.113	2½"	1½"
10d (COMMON)	.148"	3"	1½"
16d (BOX)	.135	3½"	1½"

TOP PLATE TO STUD	END NAIL 2-16d
SOLE PLATE TO STUD	END NAIL 2-16d
MULTIPLE STUDS	FACE NAIL 10d @ 24"CC
MULTIPLE STUDS @ PLYWOOD JOINTS	FACE NAIL 10d @ 6"CC
CONTINUOUS HEADER, TWO PIECES	16d @ 16"CC ALONG EACH EDGE
CONTINUOUS HEADER TO STUD	END NAIL 2-16d EA. PIECE
PLYWOOD SIDING TO FRAMING	ELECTRO GALVANIZED NAILS 8d @ 6"CC @ EDGES 8d @ 12"CC IN FIELD
GYPSUM BOARD TO STUD	.099 X 1¾" RING SHANK NAILS @ 6"CC

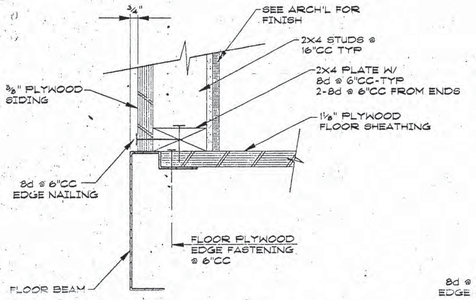

8/S6 WALL TO FLOOR BEAM CONNECTION
SCALE: 3"=1'-0"

SEE B/S3A FOR SHEAR WALL CONN. @ END WALL

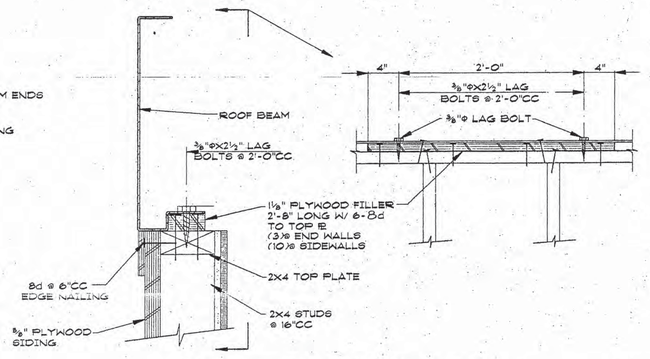

9/S6 WALL TO ROOF BEAM CONNECTION
SCALE: 3"=1'-0"

SEE A/S3A FOR SHEAR WALL CONN. @ END WALL

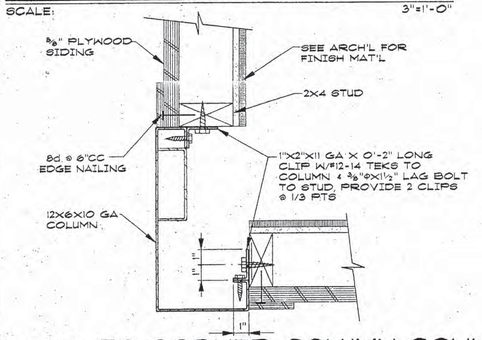

10/S6 WALL TO CORNER COLUMN CONN
SCALE: 3"=1'-0"

OFFICE OF THE STATE ARCHITECT
ACCESS COMPLIANCE SECTION
APPLICATION PER W. BID DOCS.
60052 JUN 25 '93
APPROVAL of this plan does not authorize or approve any omission or deviation from applicable regulations.
Reviewed by

THIS DOCUMENT HAS BEEN REVIEWED IN ACCORDANCE WITH THE REQUIREMENTS OF CCR, TITLE 24
60052
ARCHITECT DATE
ENGINEER DATE
MECHANICAL DATE

IDENTIFICATION STAMP
Department of General Services
Office of the State Architect
FEB 13 1991
Structural Safety Section
Appl. # 52332
Spotchecked By

LICENSED ARCHITECT
SCOTT F. CAMPBELL
No. C-20877
EXP: 4/30/95
CIVIL ENGINEER

IDENTIFICATION STAMP
DIV. OF THE STATE ARCHITECT
APP03 115776
AC FLS TN
DATE AUG 05 2014

REVISIONS	DATE	STATE FIRE MARSHALL	OFFICE OF THE STATE ARCHITECT	ENGINEER

Relocatable Restroom
Glendale School District
20 PSF ROOF LIVE LOAD
SEISMIC ZONE 4 WIND SPEED = 80 MPH - EXPOSURE C

STEELGARD, INC.
15700 So. McKinley Ave.
Lathrop, California 95330
(209) 858-2101

DRAWN JB SMC
DATE 5-21-93
CHECKED
APPROVED
PROJECT 93-

S6

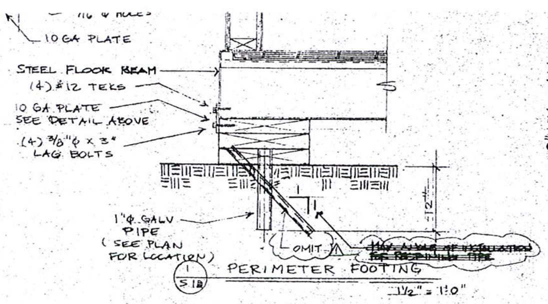

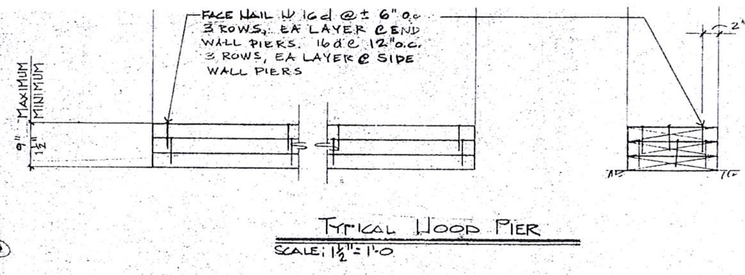

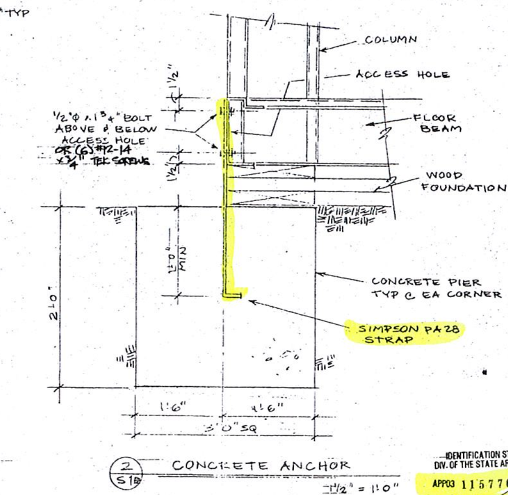

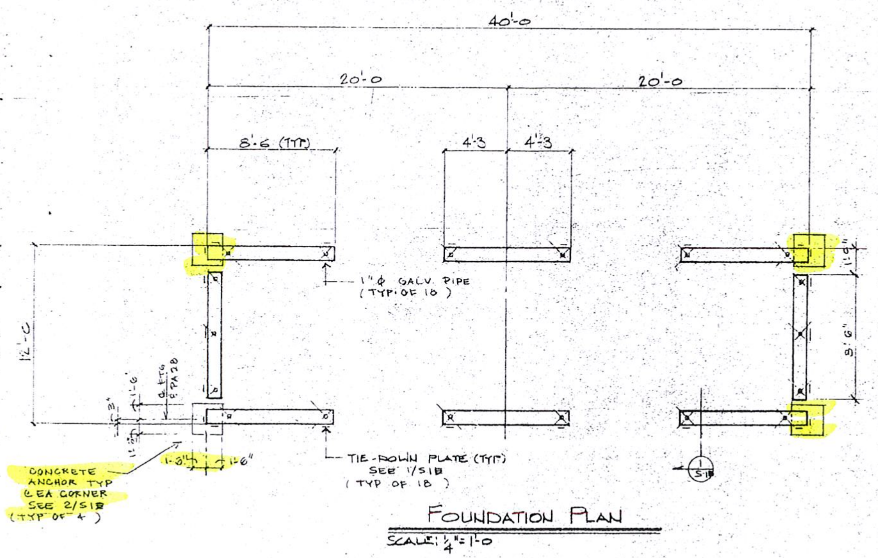

GENERAL NOTES

- BOTTOM LAYER OF PIERS SHALL BE PTDF OR FOUNDATION GRADE REDWOOD.
- 16d NAILS SHALL BE CORROSIVE RESISTANT PER UBC STANDARD 25-17, SEC 25.1721
- SHIM PIERS AS REQUIRED WITH PLYWOOD OR SOLID STOCK. SHIMS SHALL BE CONTINUOUS ACROSS LENGTH OF PIER AS FIELD CONDITIONS ALLOW.
- SOIL BEARING PRESSURE IS ASSUMED AT 1,000 PSF

IDENTIFICATION STAMP
DIV. OF THE STATE ARCHITECT
APP03 115776
AC ✓ FLS ✓ SS TN
DATE AUG 5 2014

OFFICE OF THE STATE ARCHITECT
ACCESS COMPLIANCE SECTION
60052 JUN 25 '93
APPROVAL of this plan does not authorize or approve any omission or deviation from applicable regulations.
Reviewed by

THIS DOCUMENT HAS BEEN REVIEWED IN ACCORDANCE WITH THE REQUIREMENTS OF CCR, TITLE 24
60052

REVIEWER ________ DATE ________
REVIEWER ________ DATE ________
REVIEWER ________ DATE ________

STRUCTURAL TESTS AND INSPECTIONS

No. C 20877
EXP. 4/30/95
STATE OF CALIFORNIA

	REINFORCING STEEL
	Sample and test bar steel
	Sample and test mesh
	Inspect placing at job
	STRUCTURAL STEEL
X	Sample and test as detailed below
	Shop fabrication inspection
	Field erection inspection
X	Inspection of welds — Shop
	Inspection of welds — Field
	Inspection of riveting or bolting — Shop
	Inspection of riveting or bolting — Field
	Sample and test high strength bolts and washers

CONCRETE	GROUT	MORTAR	
X			Test of aggregates for mix design only
			Suitability tests of aggregates
X			Mix designs
X			Continuous batch plant inspection
			Inspect placing
			Sample
X			Compression tests
			Pick up samples at job
			Samples delivered to laboratory
			Deliver sample forms to jobsite
			Sample and test cement

MIX DESIGNS: CONCRETE, GROUT, MORTAR OR GUNITE

MATERIAL	MAXIMUM SIZE	COMPRESSIVE STRENGTH, PSI MINIMUM
		28 DAYS
CONC	1 1/2"	2000

IDENTIFICATION STAMP
Department of General Services