Project Manual

FULLER MIDDLE SCHOOL

31 Flagg Drive
Framingham, Massachusetts

prepared by:

Jonathan Levi Architects, LLP
266 Beacon Street
Boston, Massachusetts 02116

Date of Issue:
November 22, 2019

Volume 3 of 3 Divisions 26 to 33 + Appendices

TABLE OF CONTENTS

VOLUME 1 *(DIVISIONS 00 THROUGH 05)*

DIVISION 00 — PROCUREMENT AND CONTRACTING REQUIREMENTS

Date	*Issue*	*Section Number & Title*	
11/22/19	CD	Document 00 01 01	Project Title Page
11/22/19	CD	Document 00 01 02	Project Directory
11/22/19	CD	Document 00 01 10	Table of Contents
11/22/19	CD	Document 00 11 16	Invitation to Bid
11/22/19	CD	Document 00 21 13	Instructions to Bidders *Attachment:* • CM's Supplemental Instructions to Bidders
11/22/19	CD	Document 00 22 14	List of Prequalified Bidders
08/09/19	ECSP	Document 00 31 32	Geotechnical Data
05/21/19	ESP-ADD01	Document 00 31 33	Geoenvironmental Data
11/22/19	CD	Document 00 41 14	Form for Trade Contract Bid
08/09/19	ECSP	Document 00 52 00	Owner – Construction Manager Agreement
05/21/19	ESP ADD01	Document 00 54 22	Bid Attachment Unit Prices Schedule (Bid Package 1)
8/27/19	ECSP ADD04	Document 00 54 22	Bid Attachment Unit Prices Schedule (Bid Package 2)
11/22/19	CD	Document 00 54 22	Bid Attachment Unit Prices Schedule (Bid Package 3)
11/22/19	CD	Document 00 63 13	Request For Interpretation (RFI) Form
11/22/19	CD	Document 00 63 25	Substitution Request Form
08/09/19	ECSP	Document 00 73 43	Massachusetts Prevailing Wage Rates
08/09/19	ECSP	Document 00 73 74	Statutory Requirements – Decision of the Framingham Planning Board
08/09/19	ECSP	Document 00 73 76	DEP Order of Conditions

DIVISION 01 — GENERAL REQUIREMENTS

Date	*Issue*	*Section Number & Title*	
11/22/19	CD	Section 01 10 00	Summary
8/27/19	ECSP ADD04	Section 01 22 00	Unit Prices
11/22/19	CD	Section 01 22 00.03	Unit Prices (Bid Package 3)
11/22/19	CD	Section 01 23 00	Alternates
11/22/19	CD	Section 01 25 13	Product Substitution Procedures
11/22/19	CD	Section 01 26 13	Requests for Interpretation
11/22/19	CD	Section 01 29 00	Payment Procedures
11/22/19	CD	Section 01 31 00	Project Management and Coordination
11/22/19	CD	Section 01 32 00	Construction Progress Documentation
11/22/19	CD	Section 01 33 00	Submittal Procedures
11/22/19	CD	Section 01 41 00	Regulatory Requirements
11/22/19	CD	Section 01 41 17	Utilities Notification
11/22/19	CD	Section 01 42 00	References

** = Trade Contract Required.*
ESP = Early Site Package, issued May 10, 2019 (Bid Package 1)
ECSP = Early Concrete and Steel Package, issued August 9, 2019 (Bid Package 2)
CD = Construction Document Submission, issued November 22, 2019

11/22/19	CD	Section 01 43 39	Mock-ups
11/22/19	CD	Section 01 45 00	Quality Control
11/22/19	CD	Section 01 45 29	Testing Laboratory Services
11/22/19	CD	Section 01 50 00	Temporary Facilities and Controls
11/22/19	CD	Section 01 52 00	Construction Facilities
11/22/19	CD	Section 01 60 00	Product Requirements
11/22/19	CD	Section 01 73 00	Execution
11/22/19	CD	Section 01 74 19	Construction Waste Management
11/22/19	CD	Section 01 75 00	Starting and Adjusting
11/22/19	CD	Section 01 77 00	Closeout Procedures
11/22/19	CD	Section 01 78 00	Closeout Submittals
11/22/19	CD	Section 01 78 36	Warranties
11/22/19	CD	Section 01 79 00	Demonstration and Training
11/22/19	CD	Section 01 81 13	Sustainable Design Requirements *With attachment.*
11/22/19	CD	Section 01 81 19	Indoor Air Quality Requirements
11/22/19	CD	Section 01 91 13	General Commissioning Requirements

DIVISION 02 — EXISTING CONDITIONS

Date	*Issue*	*Section Number & Title*	
05/10/19	ESP	Section 02 41 13	Utility Line Removal
11/22/19	CD	Section 02 41 17	Building Demolition
11/22/19	CD	Section 02 82 13	Asbestos Abatement
11/22/19	CD	Section 02 83 13	Hazardous Materials Handling and Disposal

DIVISION 03 — CONCRETE

Date	*Issue*	*Section Number & Title*	
11/22/19	CD	Section 03 05 13 *	Concrete Sealers (* Trade Contract Required as part of Section 09 00 09)
08/09/19	ECSP	Section 03 10 01	Concrete forming and Accessories
08/09/19	ECSP	Section 03 20 01	Concrete Reinforcing
08/09/19	ECSP ADD04	Section 03 30 01	Cast-in-Place Concrete
11/22/19	CD	Section 03 45 00 *	Precast Architectural Concrete (* Trade Contract Required as part of Section 04 00 01)

DIVISION 04 — MASONRY

Date	*Issue*	*Section Number & Title*	
11/22/19	CD	Section 04 00 01 *	Masonry Trade Contract Requirements (*Trade Contract Required)
11/22/19	CD	Section 04 20 00 *	Unit Masonry (* Trade Contract Required as part of Section 04 00 01)

DIVISION 05 — METALS

Date	*Issue*	*Section Number & Title*	
08/09/19	ECSP	Section 05 12 00	Structural Steel Framing

** = Trade Contract Required.*
ESP = Early Site Package, issued May 10, 2019 (Bid Package 1)
ECSP = Early Concrete and Steel Package, issued August 9, 2019 (Bid Package 2)
CD = Construction Document Submission, issued November 22, 2019

08/09/19	ECSP	Section 05 21 00	Steel Joist Framing
08/09/19	ECSP	Section 05 30 00	Metal Decking
11/22/19	CD	Section 05 40 00	Cold-Formed Metal Framing
11/22/19	CD	Section 05 50 00 *	Metal Fabrications (* Trade Contract Required)

VOLUME 2 *(DIVISIONS 06 THROUGH 23)*

DIVISION 06 — WOOD, PLASTICS AND COMPOSITES

Date	*Issue*	*Section Number & Title*	
11/22/19	CD	Section 06 10 00	Rough Carpentry
11/22/19	CD	Section 06 16 00	Sheathing
11/22/19	CD	Section 06 20 00	Finish Carpentry
11/22/19	CD	Section 06 40 00	Architectural Woodwork
11/22/19	CD	Section 06 49 23	Wood Grilles
11/22/19	CD	Section 06 61 16	Solid Surfacing Fabrications

DIVISION 07 — THERMAL AND MOISTURE PROTECTION

Date	*Issue*	*Section Number & Title*	
8/21/19	ECSP ADD03	Section 07 00 01 *	Waterproofing, Dampproofing and Caulking Trade Contract Requirements (* Trade Contract Required)
11/22/19	CD	Section 07 00 02 *	Roofing and Flashing Trade Contract Requirements (* Trade Contract Required)
8/21/19	ECSP ADD03	Section 07 11 13 *	Bituminous Dampproofing (* Trade Contract Required as part of Section 07 00 01)
08/09/19	ECSP	Section 07 13 53 *	Elastomeric Sheet Waterproofing (* Trade Contract Required as part of Section 07 00 01)
8/21/19	ECSP ADD03	Section 07 16 13 *	Polymer Modified Cement Waterproofing (* Trade Contract Required as part of Section 07 00 01)
11/22/19	CD	Section 07 21 00	Thermal Insulation
08/09/19	ECSP	Section 07 21 13	Board Insulation
11/22/19	CD	Section 07 24 23	Direct Applied Finish System
08/09/19	ECSP	Section 07 26 00	Vapor Retarders
11/22/19	CD	Section 07 27 26 *	Fluid-Applied Membrane Air Barriers (* Trade Contract Required as part of Section 07 00 01)
11/22/19	CD	Section 07 42 14	Exposed Fastener Metal Wall Panels
11/22/19	CD	Section 07 42 24	Phenolic Panel Assemblies
11/22/19	CD	Section 07 42 43	Composite Wall Panels
11/22/19	CD	Section 07 54 19 *	Polyvinyl-Chloride (PVC) Roofing (* Trade Contract Required as part of Section 07 00 02)

** = Trade Contract Required.*
ESP = Early Site Package, issued May 10, 2019 (Bid Package 1)
ECSP = Early Concrete and Steel Package, issued August 9, 2019 (Bid Package 2)
CD = Construction Document Submission, issued November 22, 2019

11/22/19	CD	Section 07 62 00 *	Sheet Metal Flashing and Trim (* Trade Contract Required as part of Section 07 00 02)
11/22/19	CD	Section 07 72 00 *	Roof Accessories (* Trade Contract Required as part of Section 07 00 02)
11/22/19	CD	Section 07 72 36 *	Smoke Vents (* Trade Contract Required as part of Section 07 00 02)
11/22/19	CD	Section 07 81 00	Applied Fireproofing
11/22/19	CD	Section 07 84 00	Firestopping
11/22/19	CD	Section 07 92 00 *	Joint Sealants (* Trade Contract Required as part of Section 07 00 01)

DIVISION 08 — OPENINGS

Date	*Issue*	*Section Number & Title*	
11/22/19	CD	Section 08 00 05 *	Metal Windows Trade Contract Requirements (* Trade Contract Required)
11/22/19	CD	Section 08 05 13	Common Work Results – Installation Doors and Hardware
11/22/19	CD	Section 08 11 13	Hollow Metal Doors and Frames
11/22/19	CD	Section 08 14 16	Flush Wood Doors
11/22/19	CD	Section 08 31 00	Access Doors and Panels
11/22/19	CD	Section 08 33 23	Overhead Coiling Doors
11/22/19	CD	Section 08 34 57	Security Woven Mesh Coiling Drapery
11/22/19	CD	Section 08 43 13 *	Aluminum-Framed Storefronts (* Trade Contract Required as part of Section 08 00 05)
11/22/19	CD	Section 08 63 00 *	Metal-Framed Skylights (* Trade Contract Required as part of Section 08 00 05)
11/22/19	CD	Section 08 71 00	Door Hardware
11/22/19	CD	Section 08 80 00 *	Glazing (* Trade Contract Required)
11/22/19	CD	Section 08 90 00	Louvers and Vents
11/22/19	CD	Section 08 91 12	Commissioning of Building Enclosure

DIVISION 09 — FINISHES

Date	*Issue*	*Section Number & Title*	
11/22/19	CD	Section 09 00 03 *	Tile Trade Contract Requirements (* Trade Contract Required)
11/22/19	CD	Section 09 00 06 *	Resilient Flooring Trade Contract Requirements (* Trade Contract Required)
11/22/19	CD	Section 09 00 09 *	Painting Trade Contract Requirements (* Trade Contract Required)
11/22/19	CD	Section 09 05 60	Common Work Results for Flooring
11/22/19	CD	Section 09 21 17	Shaft Wall Assemblies
11/22/19	CD	Section 09 22 16	Non-Structural Metal Framing

** = Trade Contract Required.*
ESP = Early Site Package, issued May 10, 2019 (Bid Package 1)
ECSP = Early Concrete and Steel Package, issued August 9, 2019 (Bid Package 2)
CD = Construction Document Submission, issued November 22, 2019

11/22/19	CD	Section 09 29 00	Gypsum Board
11/22/19	CD	Section 09 30 00 *	Tiling (*Trade Contract Required as part of Section 09 00 03)
11/22/19	CD	Section 09 30 16 *	Quarry Tiling (*Trade Contract Required as part of Section 09 00 03)
11/22/19	CD	Section 09 51 00 *	Acoustical Ceilings (*Trade Contract Required)
11/22/19	CD	Section 09 64 66	Wood Athletic Flooring
11/22/19	CD	Section 09 65 13 *	Resilient Base and Accessories (* Trade Contract Required as part of Section 09 00 06)
11/22/19	CD	Section 09 65 43 *	Linoleum Flooring (* Trade Contract Required as part of Section 09 00 06)
11/22/19	CD	Section 09 67 23	Resinous Flooring
11/22/19	CD	Section 09 68 00	Carpeting
11/22/19	CD	Section 09 72 33	Dry-Erase Wall Covering
11/22/19	CD	Section 09 77 23	Acoustical Wall Panels
11/22/19	CD	Section 09 77 33	Sanitary Wall Panels
11/22/19	CD	Section 09 81 00	Acoustical Insulation
11/22/19	CD	Section 09 84 15	Wood Fiber Acoustical Panels
11/22/19	CD	Section 09 91 00 *	Painting (* Trade Contract Required as part of Section 09 00 09)
11/22/19	CD	Document 09 91 13 *	Exterior Painting Schedule (* Trade Contract Required as part of Section 09 00 09)
11/22/19	CD	Document 09 91 23 *	Interior Painting Schedule (* Trade Contract Required as part of Section 09 00 09)
11/22/19	CD	Section 09 96 46 *	Intumescent Paints (* Trade Contract Required as part of Section 09 00 09)

DIVISION 10 — SPECIALTIES

Date	*Issue*	*Section Number & Title*	
11/22/19	CD	Section 10 14 00	Signage
11/22/19	CD	Section 10 21 13	Toilet Compartments
11/22/19	CD	Section 10 21 23	Cubicle Curtains
11/22/19	CD	Section 10 22 39	Folding Panel Partitions
11/22/19	CD	Section 10 28 13	Toilet Accessories
11/22/19	CD	Section 10 40 00	Safety Specialties
11/22/19	CD	Section 10 51 13	Metal Lockers
11/22/19	CD	Section 10 51 23	Phenolic Lockers (Alternate)
11/22/19	CD	Section 10 75 00	Flagpoles

** = Trade Contract Required.*
ESP = Early Site Package, issued May 10, 2019 (Bid Package 1)
ECSP = Early Concrete and Steel Package, issued August 9, 2019 (Bid Package 2)
CD = Construction Document Submission, issued November 22, 2019

DIVISION 11 — EQUIPMENT

Date	*Issue*	*Section Number & Title*	
11/22/19	CD	Section 11 31 00	Residential Appliances
11/22/19	CD	Section 11 40 00	Foodservice Equipment
11/22/19	CD	Section 11 52 13	Projection Screens
11/22/19	CD	Section 11 53 00	Laboratory Equipment
11/22/19	CD	Section 11 53 13	Laboratory Fume Hoods
11/22/19	CD	Section 11 57 00	Vocational Shop Equipment
11/22/19	CD	Section 11 61 33	Theatrical Rigging
11/22/19	CD	Section 11 61 43	Theatrical Draperies
11/22/19	CD	Section 11 61 91	Theatrical Lighting Instruments and Accessories
11/22/19	CD	Section 11 66 23	Gymnasium Equipment
11/22/19	CD	Section 11 66 24	Basketball Equipment
11/22/19	CD	Section 11 66 43	Interior Scoreboards
11/22/19	CD	Section 11 66 53	Gymnasium Dividers
11/22/19	CD	Section 11 95 13	Kilns

DIVISION 12 — FURNISHINGS

Date	*Issue*	*Section Number & Title*	
11/22/19	CD	Section 12 24 00	Window Shades
11/22/19	CD	Section 12 24 14	Motorized Window Shades
11/22/19	CD	Section 12 35 53	Laboratory Casework
11/22/19	CD	Section 12 36 53	Laboratory Countertops
11/22/19	CD	Section 12 48 16	Entrance Grilles and Frames
11/22/19	CD	Section 12 61 00	Fixed Audience Seating
11/22/19	CD	Section 12 66 13	Telescoping Bleachers

DIVISION 14 — CONVEYING SYSTEMS

Date	*Issue*	*Section Number & Title*	
11/22/19	CD	Section 14 21 00	Elevators (* Trade Contract Required)

DIVISION 21 — FIRE SUPPRESSION

Date	*Issue*	*Section Number & Title*	
11/22/19	CD	Section 21 00 00 *	Fire Protection (* Trade Contract Required as part of Section 21 00 01)
11/22/19	CD	Section 21 00 01 *	Fire Protection Trade Contract Requirements (* Trade Contract Required)
11/22/19	CD	Section 21 08 00 *	Commissioning of Fire Suppression (* Trade Contract Required as part of Section 21 00 01)

** = Trade Contract Required.*
ESP = Early Site Package, issued May 10, 2019 (Bid Package 1)
ECSP = Early Concrete and Steel Package, issued August 9, 2019 (Bid Package 2)
CD = Construction Document Submission, issued November 22, 2019

DIVISION 22 — PLUMBING

Date	*Issue*	*Section Number & Title*	
05/10/19	ESP	Section 22 00 00	Plumbing (*Issued with Early Site Package for Reference Only, not bound herewith.*)
11/22/19	CD	Section 22 00 00	Plumbing (* Trade Contract Required as part of Section 22 00 01)
11/22/19	CD	Section 22 00 01 *	Plumbing Trade Contract Requirements (* Trade Contract Required)
11/22/19	CD	Section 22 08 00 *	Commissioning of Plumbing (* Trade Contract Required as part of Section 22 00 01)

DIVISION 23 — HEATING, VENTILATING AND AIR CONDITIONING

Date	*Issue*	*Section Number & Title*	
11/22/19	CD	Section 23 00 00 *	HVAC (* Trade Contract Required as part of Section 23 00 01)
11/22/19	CD	Section 23 00 01 *	Heating Ventilating and Air Conditioning Trade Contract Requirements (* Trade Contract Required)
11/22/19	CD	Section 23 05 48 *	Vibration Control and Seismic Restraint (* Trade Contract Required as part of Section 23 00 01)
11/22/19	CD	Section 23 08 00 *	Commissioning of HVAC (* Trade Contract Required as part of Section 23 00 01)

VOLUME 3 *(DIVISIONS 26 THROUGH 33 + APPENDICES)*

DIVISION 26 — ELECTRICAL

Date	*Issue*	*Section Number & Title*	
11/22/19	CD	Section 26 00 01 *	Electrical Trade Contract Requirements (* Trade Contract Required)
05/10/19	ESP	Section 26 00 10 *	Electrical (* Trade Contract Required as part of Section 26 00 01)
11/22/19	CD	Section 26 08 00 *	Commissioning of Electrical Systems (* Trade Contract Required as part of Section 26 00 01)
11/22/19	CD	Section 26 61 11 *	Theatrical Lighting Controls (* Trade Contract Required as part of Section 26 00 01)

** = Trade Contract Required.*
ESP = Early Site Package, issued May 10, 2019 (Bid Package 1)
ECSP = Early Concrete and Steel Package, issued August 9, 2019 (Bid Package 2)
CD = Construction Document Submission, issued November 22, 2019

DIVISION 27 — COMMUNICATIONS

Date	*Issue*	*Section Number & Title*	
11/22/19	CD	Section 27 00 00 *	Technology (* Trade Contract Required as part of Section 26 00 01)
11/22/19	CD	Section 27 08 00 *	Commissioning of Communications (* Trade Contract Required as part of Section 26 00 01)
11/22/19	CD	Section 27 41 00 *	Audio-Visual Systems (* Trade Contract Required as part of Section 26 00 01)

DIVISION 28 — ELECTRONIC SAFETY AND SECURITY

Date	*Issue*	*Section Number & Title*	
11/22/19	CD	Section 28 00 00 *	Security System (* Trade Contract Required as part of Section 26 00 01)
11/22/19	CD	Section 28 08 00 *	Commissioning of Security System (* Trade Contract Required as part of Section 26 00 01)

DIVISION 31 — EARTHWORK

Date	*Issue*	*Section Number & Title*	
05/10/19	ESP	Section 31 00 00	Earth Moving
05/10/19	ESP	Section 31 10 00	Site Clearing
05/10/19	ESP	Section 31 20 00	Earthwork
05/10/19	ESP	Section 31 23 19	Dewatering
05/10/19	ESP	Section 31 25 00	Erosion & Sedimentation Controls
05/10/19	ESP	Section 31 50 00	Excavation Support and Protection
05/10/19	ESP	Section 31 63 17	Ground Improvement – Aggregate Pier and Rigid Inclusion

DIVISION 32 — EXTERIOR IMPROVEMENTS

Date	*Issue*	*Section Number & Title*	
11/22/19	CD	Section 32 00 00	Landscape Improvements
05/10/19	ESP	Section 32 12 16	Asphalt Paving
05/10/19	ESP	Section 32 16 14	Precast Concrete Curbs
05/10/19	ESP	Section 32 16 40	Granite Curb
05/10/19	ESP	Section 32 17 23	Pavement Markings
11/22/19	CD	Section 32 18 23	Basketball Court Striping
11/22/19	CD	Section 32 90 00	Planting

DIVISION 33 — UTILITIES

Date	*Issue*	*Section Number & Title*	
05/10/19	ESP	Section 33 05 13	Manholes and Structures
05/10/19	ESP	Section 33 10 00	Water Utilities
05/10/19	ESP	Section 33 31 00	Sanitary Utility Sewerage Piping
05/10/19	ESP	Section 33 41 00	Storm Utility Drainage Piping

** = Trade Contract Required.*
ESP = Early Site Package, issued May 10, 2019 (Bid Package 1)
ECSP = Early Concrete and Steel Package, issued August 9, 2019 (Bid Package 2)
CD = Construction Document Submission, issued November 22, 2019

05/10/19	ESP	Section 33 49 23	Storm Drainage Retention Structures

APPENDICES

Date	*Issue*	*Appendix Number & Title*	
11/22/19	CD	Appendix A	LEED Scorecard
11/22/19	CD	Appendix B	Code Report
11/22/19	CD	Appendix C	Foodservice Cut Sheets
11/22/19	CD	Appendix D	Soil Management Plan
11/22/19	CD	Appendix E	Hazardous Materials Summary Report

End - Table of Contents

** = Trade Contract Required.*
ESP = Early Site Package, issued May 10, 2019 (Bid Package 1)
ECSP = Early Concrete and Steel Package, issued August 9, 2019 (Bid Package 2)
CD = Construction Document Submission, issued November 22, 2019

DO NOT REMOVE
THIS PAGE INTENTIONALLY LEFT BLANK

Section 26 00 01

ELECTRICAL TRADE CONTRACT REQUIREMENTS
(TRADE CONTRACT REQUIRED)

PART 1 - GENERAL

1.1 GENERAL PROVISIONS

A. The BIDDING REQUIREMENTS, CONTRACT FORMS, and CONTRACT CONDITIONS as listed in the Table of Contents, and applicable parts of Division 1 - GENERAL REQUIREMENTS, shall be included in and made a part of this Section.

1.2 PUBLICLY BID TRADE CONTRACTOR

A. The work of this section pertains to a Publicly Bid Trade Contract and includes the following requirements:

1. Specification requirements for Trade Contract "ELECTRICAL" include all of the following listed Specification Sections: in their entirety:

a. Section 26 00 01 –ELECTRICAL TRADE CONTRACT REQUIREMENTS.
b. Section 26 00 10 - ELECTRICAL
c. Section 26 08 00 - COMMISSIONING OF ELECTRICAL SYSTEMS
d. Section 26 61 11 - THEATRICAL LIGHTING CONTROLS
e. Section 27 00 00 - TECHNOLOGY
f. Section 27 08 00 - COMMISSIONING OF COMMUNICATIONS
g. Section 27 41 00 - AUDIO-VISUAL SYSTEMS
h. Section 28 00 00 - SECURITY SYSTEM
i. Section 28 08 00 - COMMISSIONING OF SECURITY SYSTEM

B. Submit bid as directed by and in compliance with the Invitation to Bid, the Instructions to Bidders, and this Article 1.2 - PUBLICLY BID TRADE CONTRACTOR

C. Submit bid on mandatory form, and in manner described in the Instructions to Bidders before the date and time indicated for submission of bids.

D. The Trade Contractor shall perform the complete trade work, including the following listed sub-trade classes of work, with employees on its own payroll unless the Trade Contractor identifies on the bid form, the name of a sub-trade subcontractor that will perform each of the following classes of sub-trade work and the corresponding sub-trade subcontract sum.

CLASSES OF WORK REFERENCE	PARAGRAPH
Technology	27 00 00
Security System	28 00 00
Theatrical Lighting Controls	26 61 11
Audio-Visual Systems	27 41 00

E. If the Trade Contractor intends to use sub-trade subcontractors to perform any portion of the trade work other than the customary sub-trade classes of work listed in Paragraph 1.2(D), above, the Trade Contractor shall list on the bid form the names of each such sub-trade subcontractor and each respective sub-trade subcontract sum unless: (a) the value of the sub-trade subcontract is less than Twenty-Five Thousand Dollars ($25,000), or (b) the sub-trade subcontract is not subject to the provisions of M.G.L. c. 149, §§ 44A-J.

F. The work to be completed by the Trade Contractor for the work of this Section is shown on the following listed Drawings:

1. The Work of this Trade Contract is shown on the following Drawings: A001, A101, A102, A103, A200, A544, S000, S101C, S102C, S103C, S104C, LS001, LS101, LS102, LS103, A410, A411, A412, A413, A414, A415, A416, A417, A418, A419, A420, A421, A425, A440, A441, A426, A181, A181A, A181B, A181C, A181D, A182, A182A, A182B, A182C, A182D, A183, A183A, A183B, A183C, A101A, A700, A453, A211, A201, A212, A202, A213, A203, A214, A204, A215, A205, TE000, TE001, TE111, TE112, TE121, TE122, TE141, FS100, FS101, FS102, FS103, S302, S001, S002, S003, S101A, S101B, S101D, S101L, S102A, S102B, S102D, S103A, S103B, S103D, S104B, S104D, S105B, S105C, S200, S201, S202, S203, S204, S205, S300, S301, S303, S304, S305, S400, S401, S500, S501, S502, S503, S504, S600, S601, S602, S603, S604, S700, S701, VS101, A104, A480, A461, A450, A460, A111A, A422, A423, A427, A431, A433, A434, A690, A451, A691, A452, A002, A715, A429, A430, A435, A601, A463, A462, M408, M401, M402, M403, M404, M405, M406, M407, M409, C 2.1, C 2.3, C 4.0, C 4.1, C 4.2, C 6.0, C 6.1, C 6.2, A605, A603, A606, A428, A620, A625, A607, E001, E101A, E101B, E101C, E101D, E102A, E102B, E102C, E102D, E103A, E103B, E103C, E103D, E201A, E201B, E201C, E201D, E202A, E202B, E202C, E202D, E203A, E203B, E203C, E203D, E401A, E401B, E401C, E401D, E402A, E402B, E402C, E402D, E403A, E403B, E403C, E403D, E501A, E501B, E501C, E501D, E502A, E502B, E502C, E502D, E503A, E503B, E503C, E503D, T001, T101A, T101B, T101C, T101D, T102A, T102B, T102C, T102D, T103A, T103B, T103C, T103D, E002, A713, A623, A714, A570, A560, A710, A711, A622, L 1.0, L 1.1, L 1.2, L 1.3, L 1.4, L 1.5, L 1.6, L 3.0, AV000, AV101C, AV101D, AV201C, AV201D, AV300, AV301, AV303, AV400, AV500, AV501, AV502, AV503, AV600, AV601, TL100, TL111, TL121, TL131, E204, E504, C 7.0, C 7.1, C 7.2, C 7.3, C 7.4, C 7.5, C 7.6, I100, I200, E003-1, E003-2, E004, E005, E205, E300, E301, E302, E303, E304, E305, E306, E307, E400, E500, T201, T202, T300, T301
2. The complete List of Drawings for the Project is provided on the Cover Sheet of Contract Drawings.
3. Examine all Drawings and all other Sections of the Specifications for requirements therein affecting the work of this Section The listing of Contract Drawings above does not limit Trade Contractor's responsibility to determine full extent of work of this Section as required by all Drawings listed in the Drawing List on the Drawing Title Sheet, as modified by Addenda.

G. Refer to Section 01 23 00 - ALTERNATES, for Bid alternates which may affect the scope of Work of this Trade.

H. Trade Contracts for work under this Section shall be for the complete work and shall be filed in a sealed envelope with the Awarding Authority at a time and place as stipulated in INVITATION TO BID and INSTRUCTIONS TO BIDDERS.

1. The following shall appear on the upper left hand corner of the envelope:

   NAME OF TRADE
   CONTRACTOR:_____
   TRADE CONTRACT FOR TRADE: ELECTRICAL.

2. Each Trade Contract submittal for work under this Section shall be on forms furnished by Awarding Authority, as bound herein, accompanied with the required bid deposit in compliance with MGL Chapter 149 Section 44B in the amount of 5 percent of Trade Contract.

1.3 RELATED REQUIREMENTS

A. Section 07 72 36 - SMOKE VENTS.

B. Section 08 71 00 - DOOR HARDWARE.

C. Section 11 40 00 - FOODSERVICE EQUIPMENT.

D. Section 11 52 13 - PROJECTION SCREENS.

E. Section 11 53 00 - LABORATORY EQUIPMENT.

F. Section 11 53 13 - LABORATORY FUME HOODS.

G. Section 11 57 00 - VOCATIONAL SHOP EQUIPMENT.

H. Section 12 24 14 - MOTORIZED WINDOW SHADES.

I. Section 12 35 53 - LABORATORY CASEWORK.

J. Section 12 36 53 - LABORATORY COUNTERTOPS

K. Section 12 61 00 – FIXED AUDIENCE SEATING.

L. Section 21 00 00 - FIRE PROTECTION.

M. Section 22 00 00 - PLUMBING.

N. Section 23 00 00 – HVAC.

O. Section 26 00 01 –ELECTRICAL TRADE CONTRACT REQUIREMENTS.

P. Section 26 00 10 – ELECTRICAL.

Q. Section 26 08 00 - COMMISSIONING OF ELECTRICAL SYSTEMS.

R. Section 26 61 11 - THEATRICAL LIGHTING CONTROLS.

S. Section 27 00 00 – TECHNOLOGY.

T. Section 27 08 00 - COMMISSIONING OF COMMUNICATIONS.

U. Section 27 41 00 - AUDIO-VISUAL SYSTEMS.

V. Section 28 00 00 - SECURITY SYSTEM.

W. Section 28 08 00 - COMMISSIONING OF SECURITY SYSTEM.

1.4 EXAMINATION OF SITE AND DOCUMENTS

A. Bidders are expected to examine and to be thoroughly familiar with all contract documents and with the conditions under which work will be carried out. The Awarding Authority (Owner) will not be responsible for errors, omissions and/or charges for extra work arising from Construction Manager or Trade Contractor's failure to familiarize themselves with the Contract Documents or existing conditions. By submitting a bid, the Bidder agrees and warrants that he has had the opportunity to examine the site and the Contract Documents, that he is familiar with the conditions and requirements of both and where they require, in any part of the work a given result to be produced, that the Contract Documents are adequate and that he will produce the required results.

1.5 MEETINGS AND CONFERENCES

A. Pre-Bid Conference: Trade Contractors are strongly encouraged to attend the Pre-Bid Conference; refer to INVITATION TO BID for date and time.

1.6 SEQUENCING

A. Coordinate work of this Trade Contract with that of other trades, affecting or affected by this work, and cooperate with the other trades as is necessary to assure the steady progress of work.

B. Do not order or deliver any materials until all submittals, required in the listed Specification Sections included as part of this Trade Contract, have been received and approved by the Architect.

C. Before proceeding with installation work, inspect all project conditions and all work of other trades to assure that all such conditions and work are suitable to satisfactorily receive the work of this Section and notify the Architect in writing of any which are not. Do not proceed further until corrective work has been completed or waived.

PART 2 - PRODUCTS

2.1 SCAFFOLDS AND STAGING

A. General: Trade Contractors shall obtain required permits for, and provide scaffolds, staging, and other similar raised platforms, required to access their Work as specified in the Construction Manager's GENERAL PROJECT REQUIREMENTS – APPLICABLE TO ALL TRADE AND NON-TRADE SUBCONTRACTORS and herein.

1. Scaffolding and staging required for use by this Trade Contractor pursuant to requirements of the Construction Manager's GENERAL PROJECT REQUIREMENTS – APPLICABLE TO ALL TRADE AND NON-TRADE SUBCONTRACTORS shall be furnished, erected, maintained in a safe condition, and dismantled when no longer required, by this Trade Contractor requiring such scaffolding.

2. Each Trade Contractor is responsible to provide, maintain and remove at dismantling, all tarpaulins and similar protective measures necessary to cover scaffolding for inclement weather conditions other than those required to be provided, maintained and removed by the Construction Manager.
3. Furnishing portable ladders and mobile platforms of all required heights, which may be necessary to perform the work of this trade, are the responsibility this Trade Contractor.

B. Weather protection and temporary enclosures: Comply with requirements of Section 01 50 00 - TEMPORARY FACILITIES AND CONTROLS and the following:

1. Each individual Trade Contractor is responsible to provide, maintain and remove at dismantling, all tarpaulins and similar protective measures necessary to cover scaffolding for inclement weather conditions other than those required to be provided, maintained and removed by the Construction Manager pursuant to MGL (Refer to Section 01 50 00 - TEMPORARY FACILITIES AND CONTROLS and as additionally required for dust control).
   a. Construction Manager is responsible to provide, maintain and remove temporary enclosures of the work from November 1, to March 31 pursuant to Mass. General Laws.
   b. Trade Contractor is responsible to provide, maintain and remove temporary enclosures of the work for protection from inclement weather from April 1, to October 31, at no additional cost to the Owner.

2.2 HOISTING MACHINERY AND EQUIPMENT

A. All hoisting equipment, rigging equipment, crane services and lift machinery required for the work by this Trade Contractor shall be furnished, installed, operated and maintained in safe conditions by this Trade Contractor, as referenced under Section 01 50 00 - TEMPORARY FACILITIES AND CONTROLS.

PART 3 - EXECUTION (Not Used)

End of Section

DO NOT REMOVE
THIS PAGE INTENTIONALLY LEFT BLANK

Section 26 00 10

ELECTRICAL
(TRADE CONTRACT REQUIRED AS PART OF SECTION 26 00 01)

PART 1 - GENERAL 1

1.1 GENERAL PROVISIONS 1
1.2 RELATED DOCUMENTS 1
1.3 DESCRIPTION OF WORK 1
1.4 DEFINITIONS 4
1.5 ITEMS TO BE FURNISHED ONLY 4
1.6 ITEMS TO BE INSTALLED ONLY 5
1.7 RELATED WORK SPECIFIED ELSEWHERE 5
1.8 ENVIRONMENTAL REQUIREMENTS 5
1.9 CONTRACT COST BREAKDOWN 6
1.10 INSPECTION OF SITE 6
1.11 CONTRACTOR'S REPRESENTATIVE 6
1.12 COOPERATION 6
1.13 CODES, ORDINANCES, AND PERMITS 6
1.14 ELECTRICAL ROOMS OR SPACES 7
1.15 SUBMITTALS 7
1.16 GUARANTEE 7
1.17 ELECTRICAL CHARACTERISTICS 8
1.18 TEMPORARY LIGHT & POWER 8
1.19 TEMPORARY ELECTRICAL SUPPORT FACILITIES 8
1.20 INSPECTIONS AND TESTS 8
1.21 ENERGY REBATE PROGRAM 9
1.22 INFORMATION TECHNOLOGY SYSTEM (I.T.S.) and SECURITY SYSTEM PROVISIONS 9
1.23 RECORD DRAWINGS 9
1.24 OPERATING INSTRUCTIONS AND MAINTENANCE MANUALS 9
1.25 STAGING AND SCAFFOLDING 9
1.26 RETURN AIR PLENUM 10
1.27 CUTTING AND PATCHING 10
1.28 COMMISSIONING 11
1.29 SUSTAINABLE DESIGN 11
1.30 TRADE RESPONSIBILITY COORDINATION MATRIX 13
1.31 ALTERNATES 16

PART 2 - PRODUCTS 16

2.1 GENERAL 16
2.2 RACEWAYS AND FITTINGS 17
2.3 CONDUCTORS 20
2.4 ACCESS PANELS 24
2.5 SLEEVES, INSERTS, AND OPENINGS 24
2.6 FLOOR OUTLETS (FLUSH TYPE) 24
2.7 WIRING DEVICES 33
2.8 LIGHTING FIXTURES 36
2.9 THEATRICAL LIGHTING, DIMMING RACK AND CONTROLS 43
2.10 AUTOMATED LIGHTING CONTROL SYSTEM 48
2.11 ELECTRICAL POWER EQUIPMENT 70

2.12 ELECTRICAL SYSTEM CONTROLS AND INSTRUMENTS 72
2.13 GROUNDING SYSTEM 73
2.14 MAIN BUILDING SWITCHBOARD 74
2.15 PANELBOARDS 76
2.16 DRY-TYPE TRANSFORMERS 78
2.17 ELECTRIC SERVICE 81
2.18 MANUAL TRANSFER SWITCH 81
2.19 FIRE ALARM AND DETECTION SYSTEM WITH MASS NOTIFICATION (Voice Evacuation Required) 84
2.20 SURGE PROTECTION DEVICES 109
2.21 LADDER TRAY/WIREWAYS 114
2.22 SEALS 115
2.23 UNDERGROUND DUCTBANKS 116
2.24 STANDBY ELECTRICAL SYSTEM 117
2.25 VARIABLE FREQUENCY DRIVES 127
2.26 LIGHTNING PR EVENTOR SYSTEM 132
2.27 FIRESTOP SYSTEMS 135
2.28 BI-DIRECTIONAL ANTENNA SYSTEM 135

PART 3 - EXECUTION 148

3.1 INSPECTION AND ACCEPTANCE 148
3.2 WORK COORDINATION AND JOB OPERATIONS 148
3.3 PLANS AND SPECIFICATIONS 149
3.4 IDENTIFICATION 149
3.5 PROTECTION AND CLEANUP 155
3.6 PORTABLE OR DETACHABLE PARTS 156
3.7 MOUNTING HEIGHTS 156
3.8 WORKMANSHIP AND INSTALLATION METHODS 157
3.9 FEEDER CIRCUITS 164
3.10 BRANCH CIRCUITS 164
3.11 FIRESTOP SYSTEMS: 165
3.12 WATERPROOFING 165
3.13 CUTTING AND PATCHING 165
3.14 ELEVATOR COORDINATION 166
3.15 MECHANICAL SYSTEM COORDINATION 166
3.16 DISTRIBUTION EQUIPMENT TESTING 166
3.17 FAULT CURRENT, ARC FLASH AND COORDINATION STUDY 170
3.18 STORAGE AND INSTALLATION OF EQUIPMENT 177
3.19 WASTE MANAGEMENT 177
3.20 TRAINING 178
3.21 SPARE PARTS/ATTIC STOCK: 178

End of Index

Section 26 00 10

ELECTRICAL
(TRADE CONTRACT REQUIRED AS PART OF SECTION 26 00 01)

PART 1 - GENERAL

1.1 GENERAL PROVISIONS

A. Attention is directed to the CONTRACT AND GENERAL CONDITIONS and all Sections within DIVISION 01 - GENERAL REQUIREMENTS which are hereby made a part of this Section of the Specifications.

B. Equality of material, article, assembly or system other than those named or described in this Section shall be determined in accordance with the provisions of the CONTRACT AND GENERAL CONDITIONS.

C. Trade Contract Requirements: As provided under Section 26 00 01 – ELECTRICAL TRADE CONTRACT REQUIREMENTS and supplemented under the Bidding Requirements, Contract Forms, and Conditions of the Contract, and applicable parts of Division 1 - GENERAL REQUIREMENTS.

D. Work of this Filed Sub-Bid includes all individual specification sections listed in Section 26 00 01.

1.2 RELATED DOCUMENTS

A. All of the Contract Documents, including Drawings, General and Supplementary Conditions and Division 01 - General Requirements, apply to the Work of this Section.

B. Carefully examine all of the Contract Documents for requirements which affect the Work of this Section. The exact scope of Work of this Section cannot be determined without a thorough review of all specification Sections and other Contract Documents.

1.3 DESCRIPTION OF WORK

A. Work described herein shall be interpreted as work to be done by the Electrical Subcontractor. Work to be performed by other trades will be referenced to a particular contractor or subcontractor.

B. Provide all labor, materials, tools, and equipment, including scaffolding, to complete the installation of the electrical system. Install, equip, adjust, and put into operation the respective portions of the installation specified, and so interconnect various items or sections of work in order to form a complete and operating whole. Provide all necessary coordination with other trades and the architect. Systems may reference in singular or plural terms, also refer to drawings confirm quantities. The work shall consist of, but shall not necessarily be limited to, the following:

1. Primary, secondary and low tension ductbanks, manholes, and handholes.
2. Secondary distribution equipment, including secondary switchboard and metering, motor controls, Variable Frequency Drives, dry-type transformers, distribution panels, and panelboards, including feeders and subfeeders.
3. Sub-metering equipment.

4. Fire alarm system, including Mass Notification System.
5. Emergency power system, including natural gas fired emergency generator, emergency lighting and exit signs.
6. Lighting systems exterior and interior, fixtures, and controls. Electrical Subcontractor shall conduct a light level review in the field to ensure luminaires and their footcandle readings are in accordance with project criteria and the IESNA.
7. Lighting systems exterior and interior fixtures, and a complete automated addressable lighting control system with all sensors occupancy, daylight, photosensors, switches and Bacnet BMS integration.
8. All raceway systems, including boxes, couplings, and fittings.
9. All branch circuit wiring systems, including wiring devices, and plates.
10. Excavation and backfill within building foundation walls for any underground raceways.
11. Connections for all building equipment, including mechanical, plumbing, fire protection, elevators, and the like.
12. All testing of equipment installed. Provide and coordinate required electrical manufacturer's site testing and installation verifications. Identify and coordinate any Factory testing and make provisions for necessary site personnel (e.g., maintenance personnel, client, Cx agent, and engineer of record) to attend FAT execution.
13. Any other item of work hereinafter specified or indicated on electrical drawings.
14. Drilling, coring, and cutting of holes for electrical conduit, systems, and equipment, where the largest dimension thereof does not exceed 8” in diameter or the equivalent of cross-sectional area of 8” x 8” for cutting or coring. All sleeve or boxouts, regardless of size shall be provided by Electrial Sub-contractor.
15. Systems Identification.
16. Install Stage Dimming and lighting system, furnished by Stage Lighting/Rigging Contractor under Sections 116133, 116191, and 266111. Provide all conduit, both low and high voltage, high voltage wire and terminations. Refer to equipment shown on TE Series drawings.
    a. Provide all conduit, both control and high voltage, high voltage wire and controls for motorized batten hoists over the audience seating area. Batten hoists furnished and installed by Section 116133 contractor. Refer to equipment shown on TE Series.
    b. Provide all conduit, both control and high voltage, high voltage wire and terminations for motorized batten hoists over the stage area. Batten hoists furnished and installed by Section 116133 contractor. Refer to equipment shown on TE Series.
    c. The matrix of responsibilities indicated in Paragraph 2.9 is intended as a guide for delineating the work between the Electrical Contractor and the Stage Lighting/Rigging Contractor, Sections 116133, 116191, and 266111.
    d. Receive and store dimming system equipment supplied by the Section 116191 Contractor.

17. Hoisting Equipment and Machinery: Unless otherwise specified, all hoisting equipment and machinery required for the proper and expeditious prosecution and progress of the work shall be furnished, installed, operated and maintained in safe condition by the individual Non Trade and Trade Contractors and is so stated in each appropriately related Section of the Specifications. All costs for hoisting operating services shall be borne by the Non Trade and Trade Contractors unless specifically excepted in the Contract Documents.
    a. A licensed equipment manufacturer's representative shall be present at all times, to witness the erection and dismantling of all hoisting equipment and machinery, whenever such equipment is being erected or dismantled. No such work will be performed without the presence of such representative.
    b. Hoisting equipment and machinery erection and dismantling shall be performed only by trained, certified, and experienced riggers qualified to perform such work.
18. Staging and Scaffolding: All staging, planking and scaffolding, exterior and interior, required for the proper execution of the work and over eight feet in height, shall be furnished, installed, and maintained by the General Contractor.
    a. All staging up to eight feet in height shall be provided by the individual Non Trade and Trade Contractors as applicable to their work.
19. Provide Seismic Restraints for all Electrical Systems conforming to the requirements of Section 230548 which Section is herein incorporated by reference.
20. Coordination Drawings, refer to Section 013100.
21. Communications cable tray, outlet boxes and raceway system provisions including voice, data, paging, intercom, and clock. as indicated on drawings and specified in Section 270000.
22. Temporary Power and Lighting, Section 015000. Refer to Section 015000 for temporary power and lighting.
23. Alternates affecting this section.
24. Raceways system provisions for Technology systems including outlet boxes, raceway system, 120 volt sources as indicated on drawings. Raceways system provisions for Technology systems including outlet boxes, raceway system, 120 volt sources as indicated on drawings and specified in Section 270000.
25. Raceways system provisions for Integrated Electronic Security System including outlet boxes, raceway system, 120 volt sources as indicated on drawings. Raceways system provisions for Integrated Electronic Security System including outlet boxes, raceway system, 120 volt sources as indicated on drawings and specified in Section 280000.

26. Raceways system provisions for Audiovisual Systems including outlet boxes, raceway system, 120 volt sources as indicated on drawings. Raceways system provisions for Audiovisual Systems including outlet boxes, raceway system, 120 volt sources as indicated on drawings and specified in Section 274100.
27. Sustainable Design Intent: Comply with project requirements intended to achieve sustainable design, measured and documented according to the LEED Green Building Rating System, of the US Green Building Council. Refer to Section 018113, SUSTAINABLE REQUIREMENTS SUMMARY for certification level and certification requirements.
28. Section 019113 – General Commissioning Requirements and Section 260800 - Commissioning of Electrical Systems are included as work of this Section. Provide all necessary technical and material support for the commissioning of the project's electrical components and systems.
29. Firestop systems in accordance with section 078400 – Firestopping.
30. Power wiring to Variable Frequency Drivers, refer to Section 230000 Automatic Temperature Controls.
31. Power wiring to gas and water sub-meters, refer to section 230000.
32. Lightning preventor system

1.4 DEFINITIONS

A. Most terms used within the documents are industry standard. Certain words or phrases shall be understood to have specific meanings as follows:

1. Provide: Furnish and install completely connected up and in operable condition.
2. Furnish: Purchase and deliver to a specific location within the building or site.
3. Install: With respect to equipment furnished by others, install means to receive, unpack, move into position, mount and connect, including removal of packaging materials.
4. Conduit: Raceways of the metallic type which are not flexible. Specific types as specified.
5. Connect: To wire up, including all branch circuitry, control and disconnection devices so item is complete and ready for operation.
6. Subject to Mechanical Damage: Equipment and raceways installed exposed and less than eight feet above finished floor in mechanical rooms or other areas where heavy equipment may be in use or moved.

1.5 ITEMS TO BE FURNISHED ONLY

A. Furnish the following items for installation under designated sections.

1. Duct smoke detectors and duct carbon monoxide detectors with sampling tube – Section 230000 – HVAC.
2. Pre-cast pole bases to be installed by Site contractor.
3. Manholes and handholes – installed by Site Contractor.
4. Access Doors and Frames - Section 08 31 00.

1.6 ITEMS TO BE INSTALLED ONLY

A. Install the following items furnished under designated sections.

1. Specialty backboxes – Section 270000.
2. Power operated window shades – Section 122414.

1.7 RELATED WORK SPECIFIED ELSEWHERE

A. The following related work is to be performed under designated sections.

1. LEED for school requirements: Refer to Section 018113 – SUSTAINABLE REQUIREMENTS SUMMARY and Division 01 – GENERAL REQUIREMENTS.
2. Temporary Facilities and Controls: Section 015000.
3. Excavation and Backfill (except within building foundation): DIVISION 31 - EARTHWORK.
4. Pads and Duct Envelopes: SECTION 033001 – CAST-IN-PLACE CONCRETE.
5. Insulation: SECTION 072100 – THERMAL INSULATION.
6. Finish Painting: SECTION 099100 – PAINTING.
7. Cutting beyond 1.3, B.12 above and patching of all openings regardless of size shall be by trade responsible for Section on which penetration occurs.
8. Automatic Temperature Control: SECTION 230000 – AUTOMATIC TEMPERATURE CONTROLS.
9. Hardware: SECTION 087100 – DOOR HARDWARE.
10. Powered Athletic equipment - SECTION 116623 GYMNASIUM EQUIPMENT
11. Technology Wiring and Equipment: SECTION 270000 – TECHNOLOGY.
12. Integrated Electrical Security System Wiring: Section 280000 - Integrated Electronic Security System.
13. Power Operated Shades – SECTION 122400 – WINDOW SHADES
14. Section 019113 – General Commissioning Requirements and Section 260800 – Comissioning of Electrical Systems.
15. For coordination with structural trusses refer to Section 05 40 00 – Cold-Formed Metal for required layout coordination.
16. Temporary Power and Lighting: Section 015000.
17. Sustainable Design:
    a. Section 017419 – Construction Waste Management
    b. Section 018113 – Sustainable Design Requirements
    c. Section 018119 –Indoor Air Quality Requirements
    d. Definitions: Refer to Section 018113 “Sustainable Design Requirements” for definitions of terms used in this section.

1.8 ENVIRONMENTAL REQUIREMENTS

A. The work of this section shall comply with requirements of the following:

1. SECTION 013100 – PROJECT MANAGEMENT AND COORDINATION

2. SECTION 014100 – REGULATORY REQUIREMENTS
3. SECTION 018113 – SUSTAINABLE DESIGN REQUIREMENTS

1.9 CONTRACT COST BREAKDOWN

A. Submit a breakdown of contract price to aid Architect in determining value of work installed as job progresses. The submission shall be broken out by sitework, and per building. Each should then be further broken out by materials, rough-in and finish work.

1.10 INSPECTION OF SITE

A. Electrical bidders will be permitted to inspect site. Failure to inspect existing conditions or to fully understand work which is required shall not excuse.

B. Electrical Subcontractor from his obligations to supply and install work in accordance with specifications and the drawings and under all site conditions as they exist.

1.11 CONTRACTOR'S REPRESENTATIVE

A. Retain a competent representative on the project. Do not substitute representative without prior approval from Owner.

1.12 COOPERATION

A. Work shall be carried on under usual construction conditions, in conjunction with other contractors work. Cooperate with other contractors, coordinate work and proceed in a manner as not to delay progress.

B. Before proceeding, examine all construction drawings and consult other contractors to coordinate installation and avoid interference.

C. In case of dispute, the Architect will render a decision in accordance with General and Supplementary General Conditions.

1.13 CODES, ORDINANCES, AND PERMITS

A. Codes and Ordinances:
1. All material and work provided shall be in accordance with the following codes and standards as most recently amended.
2. Commonwealth of Massachusetts Building Code
3. Massachusetts Electric Code, 2017 Edition
4. State Department of Public Safety
5. NFPA 101 "Life Safety Code"
6. NFPA Standards
7. NEMA TCB 2-2017
8. Standards of the Underwriters Laboratories (UL)
9. Occupational Safety and Health Act (OSHA)
10. Americans with Disabilities Act (ADA)

11. Energy Conservation Code
12. City of Framingham
13. NETA, National Electrical Testing Association
14. Where contract documents indicate more stringent requirements than codes, the contract documents shall take precedence.

B. Permits: Be responsible for filing documents, and securing of inspection and approvals. Pay all local connection & permit fees. Costs related to temporary service, Costs related to temporary service, refer to Section 015000 also refer to AIA 201 General Conditions.

1.14 ELECTRICAL ROOMS OR SPACES

A. Be responsible for ensuring that the dedicated space and clearances required in the NEC, Section 110-26 are maintained for all electrical equipment.

B. Call other contractors' attention to the requirements contained in the above mentioned code sections, prior to the installation of equipment by other contractors, in order to ensure no violations.

1.15 SUBMITTALS

A. Refer to Section 013300 – SUBMITTAL PROCEDURES, for requirements.

1.16 GUARANTEE

A. All parts of the work shall be guaranteed for a period of one year from the date of acceptance of the job by Owner. If during that period of general guaranty, any part of the work fails, becomes unsatisfactory, or does not function properly due to any fault in material or workmanship whether or not manufactured or job built, the Owner shall upon notice from owner promptly proceed to repair or replace such faulty material or workmanship without expense to owner, including cutting, patching, and painting, or other work involved, and including repair or restoration of any damaged sections of the premises resulting from such faults.

B. In the event that a repetition of any one defect occurs indicating the probability of further failure and which can be traced to faulty design, material, or workmanship, then repair or replacement shall not continue to be made but the fault shall be remedied by a complete replacement of the entire defective unit.

C. In addition to the general guaranty, obtain and transmit to owner any guaranties or warranties from manufacturers of specialties, but only as supplementary to the general guaranty which will not be invalidated by same.

D. Electrical Contractor is responsible to provide and/or install the correct designated equipment, components, and materials. Submittal approval by the engineer does not relieve the contractor from any contractual requirement to provide a complete and fully working system.

1.17 ELECTRICAL CHARACTERISTICS

A. In general, and unless specifically indicated otherwise, all building service, heating, ventilating, air conditioning, and plumbing equipment shall be of the following characteristics:

B. Power Factor: All equipment provided rated greater than 1,000 watts and lighting equipment greater than 15 watts with an inductive reactance load component shall have a power factor of not less than 90 percent under rated load conditions.

1. Motors up to and including 1/3 HP shall be suitable for 120 volts, single phase operation.
2. Motors larger than 1/3 HP shall be suitable for 480 volts, three phase operation.
3. Electric heating equipment 4 KW and less shall be suitable for 277 volt single phase operation. Over 4 KW shall be 480 volt three phase.

1.18 TEMPORARY LIGHT & POWER

A. Refer to Section 015000 - TEMPORARY FACILITIES AND CONTROLS.

1.19 TEMPORARY ELECTRICAL SUPPORT FACILITIES

A. Refer to Section 01 50 00 Temporary facilities and controls.

B. Provide own field office and/or storage facilities which shall be located as directed or permitted by General Contractor and in accordance with local regulations. Provide all tools, equipment, ladders, and temporary construction required for execution of the work.

C. All scaffolding, ladders, and other temporary construction shall be rigidly built in accordance with all local and state requirements, and shall be removed upon completion.

1.20 INSPECTIONS AND TESTS

A. Inspection: If inspection of materials installed shows defects, such defective work, materials, and/or equipment shall be replaced and inspection and tests repeated.

B. Tests: Make reasonable tests and prove integrity of work and leave electrical installation in correct adjustment and ready to operate. All panels and switchboards shall have phases balanced as near as practical. A consistent phase orientation shall be adhered to at all terminations.

C. Provide and coordinate required electrical manufacturer's site testing and installation verifications. Site testing protocols shall be submitted by the applicable vendor PRIOR to commencement of site tests. All completed site testing is to be properly documented with test reports submitted as a Cx pre-requisite. Identify any Factory testing and make provisions for necessary site personnel (e.g., maintenance personnel, client, Cx agent, and engineer of record) to attend FAT execution.

D. Provide all necessary technical and material support for the commissioning of the project's electrical components and systems. After establishing a general project

schedule, add pertinent details of the commissioning workplan, incorporating necessary Cx predecessors, successors, and durations. Obtain/execute/submit all required documentation necessary for Cx to commence

1.21 ENERGY REBATE PROGRAM

A. This project has been designed to incorporate equipment approved for energy rebate such as fixtures, performance lighting, building lighting controls, and VFDs. Meet with Utility Company prior to lighting shop drawing submittal to ascertain that submittal meets program guidelines. Fixtures shall be DLC listed or equivalent. Assist Owner and Engineer in effort to obtain utility rebates the Owner is eligible for. Equivalent lighting fixtures which meet DLC shall require lighting vendor to submit shop drawings to utility company for approval. It is the intent of this project to Qualify for incentives which requires an additional 30 days of reported kWh saved and six months of lighting energy use data as reported by the system post-insallation.

1.22 INFORMATION TECHNOLOGY SYSTEM (I.T.S.) and SECURITY SYSTEM PROVISIONS

A. Electrical Sub-contractor shall work closely with the I.T.S. Sub-contractor, and Security System Sub-contractor to assure a first class installation. Coordinate all back boxes and conduits required prior to installations. In general, the Electrical Subcontractor shall provide conduits from systems outlets to accessible ceiling space.

B. The Electrical Subcontractor shall be responsible for providing all related building preparation including, but not limited to: power, cable trays, conduits with bushings, conduit stubs with bushings, sleeves with bushings (all conduit, stubs, and sleeves, shall be brought to an accessible ceiling of the same floor), backboxes, pull strings, bonding, grounding, for a completely operational system, as specified and shown on Drawings.

1.23 RECORD DRAWINGS

A. Refer to Section 017700 – CLOSEOUT PROCEDURES for requirements.

1.24 OPERATING INSTRUCTIONS AND MAINTENANCE MANUALS

A. Refer to Section 017700 – CLOSEOUT PROCEDURES for requirements.

B. Refer to Section 017800 – CLOSEOUT SUBMITTALS for requirements.

C. Refer to Section 017836 – WARRANTIES for requirements.

1.25 STAGING AND SCAFFOLDING

A. Staging and scaffolding shall be of engineered design adequate and suitable for the intended purpose and loading and in compliance with all applicable Federal, State and local laws and regulations, shall have all accident prevention devices and other features required by Federal, State and local laws and regulations, and shall be erected, maintained and removed by experienced scaffolding/staging builders.

B. Each Trade Contractor entering upon the Work shall furnish, erect and maintain all staging and scaffolding required for work under his subcontract. Each Trade Contractor shall provide access to staging and scaffolding for all inspections by the Owner, OPM, Commissioning Agent or Inspection Agency. Each Trade Contractor shall dismantle and remove such staging and scaffolding on completion of his work and at other times as necessary to accommodate and facilitate orderly progress of the Work including work by other trades.

C. The General Contractor shall furnish, erect and maintain all staging and scaffolding related to work within the top floor ceiling of the interior central stair space. The scaffolding at this location shall be coordinated and scheduled to be installed to best and most efficiently be utilized by all trades. The General Contractor shall be responsible to dismantle and remove staging and scaffolding and shall notify trades prior to removal. Any trades not utilizing the scaffolding during the allotted time shall be responsible to provide scaffolding for their work.

1.26 RETURN AIR PLENUM

A. All wiring systems in areas above hung ceiling shall either be run in conduit or shall be "UL listed" plenum cable.

1.27 CUTTING AND PATCHING

A. Penetrations through construction for the Work of this Section:

1. Coring/Cutting: Perform all coring for required work up to and including 8” in diameter or equivalent in area of 8” square. Coring beyond 8” or cutting beyond the equivalent of 8” square will be performed by the General Contractor.
2. Notify Masonry Sub-Contractor of exact locations and sizes for openings required in masonry, to be executed under Section 042000 – Unit Masonry, utilizing lintels furnished per Section 055000 – Metal Fabrications.
3. Cut openings in new and existing non-masonry construction where required for penetrations. All cutting shall conform to the requirements of Section 01 73 00 EXECUTION, and 024119 – Demolition.
4. Refer to Section 024119 – Demolition for restrictions on all alterations to structural elements.

B. Patching at penetrations through construction for the Work of this Section:

1. Notify Masonry Sub-Contractor when plumbing work is complete at penetrations through masonry construction, and ready for patching under Section 042000 – Unit Masonry.
2. Notify appropriate Sub-Contractors when plumbing work is complete at penetrations through non-masonry construction, and ready for patching under Sections in Division 09 - FINISHES.

C. Drilling, coring, and cutting of new and existing structures (through walls, floors, ceiling) where the largest dimension does not exceed 8 in. diameter for drilling/coring or the equivalent of an area equal to or less than 8” square shall be by the Electrical Subcontractor.

D. Throughout the performance of the cutting and coring work, ensure that the structural integrity of the existing walls, floors, overhead structure, and other structural components, which are to remain, is maintained until permanent work is installed. Prior to any coring or cutting verify all locations of same with the Construction Manager. All cutting and coring is to be performed in accordance with approved coordination drawings. All cutting or coring of structural must receive approval of the Architect prior to proceeding.

E. No additional compensation will be authorized for cutting and patching work that is necessitated by ill-timed, defective, or non-conforming installations.

F. Patching of surfaces shall be by the trade responsible for the surface penetrated.

G. Refer to related architectural sections including Section 017300 for additional reference.

1.28 COMMISSIONING

A. Where indicated in the equipment or commissioning specifications, engage a factory-authorized service representative, to perform startup service as per functional test sheets and requirements of Section 019113 – Building Commissioning Requirements and Section 260800 - Commissioning of Electrical Systems.

B. Complete installation and startup checks and functional tests according to Section 019113 –Building Commissioning Requirements, Section 260800 - Commissioning of Electrical Systems and manufacturers written instructions.

C. Operational Test: After electrical system has been energized, start units to confirm proper unit operation. Rectify malfunctions, replace defective parts with new one and repeat the start up procedure.

D. Verify that equipment is installed and commissioned as per requirements of section 019113 and manufacturers written instructions/requirements.

1.29 SUSTAINABLE DESIGN

A. SUMMARY

1. The Owner has established that this Project shall minimize the detrimental impacts on Indoor Air Quality (IAQ) resulting from construction activities. Factors that negatively impact indoor air, such as the use of adhesives, sealants, paints and coatings which exceed the minimum levels detailed in Division 01 shall not be permitted.

B. REFERENCE STANDARDS

1. SMACNA IAQ: Guidelines for Occupied Buildings Under Construction, 2nd Edition 2007, ANSI/SMACNA 008-2008 (Chapter 3): The Steel Metal and Air Conditioner National Contractors Association.
2. ANSI / ASHRAE 52.2-1999, “Method of Testing General Ventilation Air-Cleaning Devices for Removal Efficiency by Particle Size”.
3. United States Environmental Protection Agency, “Compendium of Methods for the Determination of Air Pollutants in Indoor Air”

4. The United States Green Building Council "Green Building Design and Construction" 2009 Edition

C. LEED FOCUS MATERIALS

1. LEED Focus Materials for Divisions 26
2. VOC Products
3. Composite Wood and assemblies containing composite wood
4. Solid wood products and assemblies containing solid wood
5. Lamps that contain mercury (fluorescent; metal halide; mercury vapor)

D. LEED ACTION SUBMITTALS

1. Refer to Section 018113, Sustainable Requirements Summary for detailed descriptions of the submittal documents listed below.
2. LEED Reporting Form (LRF): Submit a completed LRF for the materials included in Sections from Divisions 26 per LEED Reporting Form. Provide only the following information:
   a. The Volatile Organic Compound (VOC) content for all field-applied interior adhesives, sealants, paints and coatings used.
   b. Material Costs for all Wood Based Materials (solid wood and Composite Wood).
   c. If the VOC Budget Method has been selected as the LEED compliance path for Credits EQc4.1 and EQc4.2 provide the Material Costs and VOC Volumes used for applicable adhesives, sealants, paints and coatings.
3. Validation: Provide validation according to the Action Submittals requirements of Section 018113 "Sustainable Requirements Summary".
   a. VOC Content
   b. FSC Certified Wood:
   c. Composite Wood
   d. Laminating Adhesives
   e. Low Mercury Lamps
4. Submittal Package: LEED submittal information shall be assembled into 1 package per Section or sub-contractor. Incomplete or inaccurate submittals may be used as the basis for rejecting the submitted products or assemblies.

E. LEED QUALITY ASSURANCE

1. Field-applied adhesives, sealants, paints and coatings used for interior applications which meet the volatile organic compound (VOC) and chemical component limitations defined in Section "Volatile Organic Compound Limits". This includes products both specified and products not specified but required to complete the work of this section.
2. Composite Wood products that:
   a. Do not contain added urea-formaldehyde resins.
   b. Do not use laminating adhesive containing urea-formaldehyde
3. Wood Based Products (solid wood and composite wood) that are certified by the Forrest Stewardship Council (FSC).

4. Mercury-containing lamps with less than 70 picograms per lumen hour of mercury content.

F. INDOOR AIR QUALITY MANAGEMENT

1. Carry out indoor air quality management measures and activities as required in Section 018119 – Construction Indoor Air Quality Management.

G. CONSTRUCTION WASTE MANAGEMENT AND DISPOSAL

1. Carry out construction waste management and disposal measures and activities as required in Section 017419 –Construction Waste Mgmt and Disposal.

1.30 TRADE RESPONSIBILITY COORDINATION MATRIX

Device	Furnished By	Installed By	Power Wiring	Control Wiring	Fire Alarm Wiring	Notes
Smoke Detectors (Area type)	26 00 10	26 00 10	26 00 10	23 00 00 (ATC)	26 00 10	
Smoke Detectors (Duct mounted)	26 00 10	23 00 00	26 00 10	23 00 00 (ATC)	26 00 10	
Carbon Monoxide Detectors (Duct mounted)	26 00 10	23 00 00	26 00 10	23 00 00 (ATC)	26 00 10	
Smoke & Fire/Smoke Dampers	23 00 00	23 00 00	N/A	N/A	N/A	
Smoke & Fire/Smoke Damper Actuators	23 00 00	23 00 00	26 00 10 & 23 00 00 (ATC)	23 00 00 (ATC)	26 00 10	2
Fire Dampers	23 00 00	23 00 00	N/A	N/A	N/A	
VAV Box Damper Actuator	23 00 00 (ATC)	Box Mfr	23 00 00 (ATC)	23 00 00 (ATC)	N/A	2
VAV Box DDC Controller	23 00 00 (ATC)	Box Mfr	23 00 00 (ATC)	23 00 00 (ATC)	N/A	2
Hydronic Control Valves	23 00 00 (ATC)	23 00 00	N/A	23 00 00 (ATC)	N/A	1
Hydronic Control Valve Actuator	23 00 00 (ATC)	23 00 00 (ATC)	23 00 00 (ATC)	23 00 00 (ATC)	N/A	1
Sheet Metal Damper	23 00 00	23 00 00	N/A	N/A	N/A	1, 6
Sheet Metal Damper Actuators	23 00 00 (ATC)	23 00 00 (ATC)	23 00 00 (ATC)	23 00 00 (ATC)	N/A	1, 6
Natural Gas Energy Meters	22 00 00 (ATC)	22 00 00	26 00 10 & 23 00 00 (ATC)	23 00 00 (ATC)	N/A	3

Device	Furnished By	Installed By	Power Wiring	Control Wiring	Fire Alarm Wiring	Notes
Electrical Energy Meters	26 00 10	26 00 10	26 00 10 & 23 00 00 (ATC)	23 00 00 (ATC)	N/A	3
Domestic Water Meters	23 00 00 (ATC)	22 00 00	26 00 10 & 23 00 00 (ATC)	23 00 00 (ATC)	N/A	3
Airflow Measuring Stations	23 00 00 (ATC)	23 00 00 (ATC)	N/A	23 00 00 (ATC)	N/A	
DDC Panels	23 00 00 (ATC)	23 00 00 (ATC)	26 00 10 & 23 00 00 (ATC)	23 00 00 (ATC)	N/A	4, 7
VFDs at RTU & MAU	230000	230000 (RTU MFG.)	26 00 00	230000 (ATC)	N/A	10, 11
VFDs at EFs (except Kitchen EF), Pumps & AHUs	26 00 00	26 00 00	26 00 00	23 00 00 (ATC)	N/A	5, 6, 9
VFDs at EFs at Kitchen Exhaust	Kitchen Equipment Vendor	26 00 00	26 00 00	23 00 00 (ATC)	N/A	
Elevator Hoistway Vent Damper	23 00 00	23 00 00	N/A	N/A	N/A	
Elevator Hoistway Vent Damper Actuator	23 00 00 (ATC)	23 00 00 (ATC)	23 00 00 (ATC)	23 00 00 (ATC)	26 00 10	
Emergency Shower/Eye Wash	22 00 00	22 00 00	26 00 10	23 00 00 (ATC)	N/A	
Boiler Breeching	23 00 00	23 00 00	N/A	N/A	N/A	
DHW Breeching	22 00 00	22 00 00	N/A	N/A	N/A	
Kitchen Emergency Gas Valve	22 00 00	22 00 00	26 00 10	26 00 10	26 00 10	
Kitchen Energy Management System	Food Service Contractor	Food Service Contractor	26 00 10	23 00 00 (ATC)	26 00 10	
Rooftop Mechanical Enclosure	230000	230000	26 00 10	230923	26 00 10	5, 6, 7, 8

Sheet Metal Damper Actuators	23 00 00 (ATC)	23 00 00 (ATC)	23 00 00 (ATC)	23 00 00 (ATC)	N/A	1, 6
Natural Gas Energy Meters	23 00 00 (ATC)	22 00 00	26 00 10 & 23 00 00 (ATC)	23 00 00 (ATC)	N/A	3
Electrical Energy Meters	26 00 10	26 00 10	26 00 10 & 23 00 00 (ATC)	23 00 00 (ATC)	N/A	3
Domestic Water Meters	23 00 00 (ATC)	22 00 00	26 00 10 & 23 00 00 (ATC)	23 00 00 (ATC)	N/A	3
HVAC Hydronic Energy Meters	23 00 00	23 00 00 (ATC)	26 00 10 & 23 00 00 (ATC)	23 00 00 (ATC)	N/A	3
Airflow Measuring Stations	AHU Manufacturer	AHU Manufacturer	N/A	23 00 00 (ATC)	N/A	
DDC Panels	23 00 00 (ATC)	23 00 00 (ATC)	26 00 10 & 23 00 00 (ATC)	23 00 00 (ATC)	N/A	4, 7
VFDs at RTU & MAU	230000	230000 (RTU MFG.)	26 00 00	230000 (ATC)	N/A	10, 11
VFDs at EFs (except Kitchen EF), Pumps & AHUs	26 00 00	26 00 00	26 00 00	23 00 00 (ATC)	N/A	5, 6, 9
VFDs at EFs at Kitchen Exhaust	Kitchen Equipment Vendor	26 00 00	26 00 00	23 00 00 (ATC)	N/A	
Elevator Hoistway Vent Damper	23 00 00	23 00 00	N/A	N/A	N/A	
Elevator Hoistway Vent Damper Actuator	23 00 00 (ATC)	23 00 00 (ATC)	23 00 00 (ATC)	23 00 00 (ATC)	26 00 10	
Emergency Shower/Eye Wash	22 00 00	22 00 00	26 00 10	23 00 00 (ATC)	N/A	
Boiler Breeching	23 00 00	23 00 00	N/A	N/A	N/A	
DHW Breeching	22 00 00	22 00 00	N/A	N/A	N/A	
Kitchen Emergency Gas Valve	22 00 00	22 00 00	26 00 10	26 00 10	26 00 10	
Kitchen Energy Management System	Food Service Contractor	Food Service Contractor	26 00 10	23 00 00 (ATC)	26 00 10	
Rooftop Mechanical Enclosure	230000	230000	26 00 10	230923	26 00 10	5, 6, 7, 8

Notes:

1. Division 23 00 00 and Division 23 00 00 (ATC) Contractors shall fully coordinate all airflow damper and hydronic valves sizes and quantities.
2. Smoke Damper and VAV Box power wiring shall be provided by Division 26 00 10 to junction box locations shown on electrical drawings; Division 23 00 00 (ATC) Contractor shall provide final power wiring from junction box to end device location.
3. Division 26 00 10 Contractor shall provide all line-voltage power wiring required for meters; Division 23 00 00 (ATC) Contractor shall provide all low-voltage power wiring required for meters.
4. Division 26 00 10 shall provide power at main DDC Panel. Division 23 00 00 (ATC) shall provide power to all other DDC Panels.
5. VFDs for HVAC pumps located within rooftop mechanical plant enclosure shall be provided by rooftop mechanical plant and enclosure manufacturer.
6. Sheetmetal dampers and actuators, required for rooftop mechanical plant (RME) and enclosure shall be provided by RME manufacturer.
7. DDC panel required for rooftop mechanical plant and enclosure (RME) shall be provided by ATC Contractor
8. Division 230000 to field install pipe and duct insulation and all mechanical equipment identification. Division 210000 and 220000 to field install all Division 210000 and 220000 trade related piping and equipment insulation and identification.
9. Division 26 00 10 shall provide VFDs for all EFs and pumps with exception to EFs and/or pumps provided with ECM motors. ECM motors are specified in Division 23 00 00 and provided by Division 23 00 00 coordinate with mechanical schedules and specifications.
10. Power wiring for RTU, and MAU shall be a single point connector made by the Electrical Contractor (26 00 10). Integral wiring and connections shall be provided by Division 23 00 00.
11. Division 26 00 10 shall provide dedicated 120V, 20 amp branch circuit for service light and receptacles for all RTU's and MAU. Division 26 00 10 shall provide GFI/WP type receptacles within 20' of all RTU's and MAU and type "J" fixtures with switch in unit vestibules and service areas within units.

1.31 ALTERNATES

A. None

PART 2 -PRODUCTS

2.1 GENERAL

A. Product specifications are written in such a manner so as to specify what materials may be used in a particular location or application and therefore do not indicate what is not acceptable or suitable for a particular location or application. As an example: non-metallic sheathed cable is not specified; therefore, it is not acceptable.

B. For purpose of establishing a standard of quality and not for purpose of limiting competition, the basis of this Specification is upon specified models and types of equipment and materials, as manufactured by specified manufacturers.

C. In all cases, standard cataloged materials and systems have been selected. Materials such as lighting fixtures specially manufactured for this particular project and not part of a manufacturers' standard product line will not be acceptable. In the case of systems, the system components shall be from a single source regularly engaged in supplying such systems. A proposed system made up of a collection of various manufacturers' products will be unacceptable.

D. Where Specifications list manufacturers' names and/or "Or Equal", other manufacturers' equipment will be considered if equipment meets Specification requirements and has all features of the specified items as are considered essential by Architect (and/or Engineer). In al cases the Architect (and/or Engineer) decision shall be final and binding. No exceptions.

E. All material shall be new and shall be UL listed.

2.2 RACEWAYS AND FITTINGS

A. Raceways - General:

1. No raceway shall be used smaller than ¾ in. diameter and shall have no more than four 90o bends in any one run, and where necessary, pull boxes shall be provided. Only rigid metal conduit or intermediate metal conduit is allowed for slab work. Cable systems, if allowed to be used by other sections of this specification, shall not be used exposed or in slabs, whether listed by "UL" for such use or not.
2. Rigid metal conduit conforming to, and installed in accordance with, Article 344 shall be heavy wall zinc coated steel conforming to American Standard Specification C80-1 and may be used for service work, exterior work, slab work, and below grade level slab, wet locations, and in mechanical rooms for drops down to equipment from elevations below eight feet and also where raceway may be subject to mechanical damage.
3. Intermediate metal conduit conforming to, and installed in accordance with, Article 342, may be used for all applications where rigid metal conduit is allowed by these specifications.
4. Electrical Metallic Tubing (EMT), conforming to, and installed in accordance with, Article 358 shall be zinc coated steel, conforming to industry standards, may be used in masonry block walls, stud partitions, above furred ceilings, where exposed but not subject to mechanical damage, and may be used for fire alarm work.
5. Surface metal raceways conforming to, and installed in accordance with, Article 386 may be used only where raceways cannot be run concealed, and then, if only specifically approved.
6. Flexible metal conduit shall be used for final connections to recessed lighting fixtures from above ceiling junction boxes and for final flexible connections to motors and other rotating or vibrating equipment. Liquid tight flexible metal conduit shall be used for the above connections which are located in moist locations. All flexible connections shall include an insulated grounding conductor.

7. Rigid non-metallic conduit may be used for underground electric and telephone services outside the foundation wall and also below slab and shall be polyvinyl chloride (PVC) schedule 40, 90 deg. C. Rigid metal conduits shall be used thru-foundation walls and thru-slab. Below slab conduits do not require concrete encasement.
8. PVC Schedule 40 may be used for below slab circuits within building confines. Below slab rigid non-metallic conduits do not require concrete encasement. Rigid non-metallic conduits may be used for below slab feeders and branch circuits, but shall not be used in slabs, nor for elbows which penetrate slabs. Raceways and fittings shall be produced by same manufacturer.
9. PVC schedule 40 may also be used for underground branch circuits outside the foundation wall.
10. PVC schedule 80 conduit will be used as indicated on Electrical Site Plan, and as required by code.
11. Acceptable manufacturers:
    a. Pittsburgh Standard Conduit Company
    b. Republic Steel and Tube
    c. Youngstown Sheet and Tube Company
    d. Carlon
    e. Or equal
12. Fittings:
    a. Provide insulated bushings on all raceways 1 inch diameter or larger.
    b. Manufacturer's standard fittings shall be used for raceway supports.
    c. Expansion Fittings: Expansion fittings shall be used where structural and concrete expansion joints occur and shall include a ground strap. Bond separate buildings in accordance with code.
    d. Couplings for rigid metal and intermediate metal conduit shall be threaded type.
    e. Threadless fittings for EMT shall be watertight compression type or set-screw type (dry-locations). All fittings shall be concrete tight. No diecast fittings allowed except for raceways larger than 1 inch diameter.
    f. Cable supports in vertical raceways shall be of the split wedge type. Armored cable supports for vertical runs to be of wire mesh basket design.
    g. Wall entrance seals shall be equal to O.Z. Gedney type "WSK".
    h. Couplings, elbows and other fittings used with rigid nonmetallic conduit shall be of the solvent cemented type to secure a waterproof installation.
        1) Acceptable manufacturers:
            a) O.Z.
            b) Crouse Hinds
            c) Appleton
            d) EFCOR
            e) Steel City
            f) Or equal

B. Outlets, Pull and Junction Boxes:

1. Outlets:

   a. Each outlet in wiring or raceway systems shall be provided with an outlet box to suit conditions encountered. Boxes installed in normally wet locations or surface mounted shall be of the cast-metal type having hubs. Concealed boxes shall be cadmium plated or zinc coated sheet metal type. Old work boxes with Madison clamps not allowed in new construction. Thru the wall boxes are not permitted.

   b. Each box shall have sufficient volume to accommodate number of conductors in accordance with requirements of Code. Boxes shall not be less than 1-1/2 in. deep unless shallower boxes are required by structural conditions and are specifically approved by Architect. Ceiling and bracket outlet boxes shall not be less than 4 in. octagonal except that smaller boxes may be used where required by particular fixture to be installed. Flush or recessed fixtures shall be provided with separate junction boxes when required by fixture terminal temperature requirements. Switch and receptacle boxes shall be 4 in. square or of comparable volume.

   c. Far side box supports shall be Caddy J-1A.

   d. Acceptable manufacturers:
      1) Appleton
      2) Crouse Hinds
      3) Steel City
      4) RACO
      5) Or equal

2. Pull and Junction Boxes: Where indicated on plans, and where necessary to terminate, tap off, or redirect multiple raceway runs or to facilitate conductor installation, furnish, and install appropriately designed boxes. Boxes shall be fabricated from code gauge steel assembled with corrosion resistant machine screws. Box size shall be sized per Code.

3. Boxes in moist or wet areas shall be galvanized type. Boxes larger than 4-11/16 inches square shall have hinged covers. Boxes larger than 12 inches in one dimension will be allowed to have screw fastened covers, if a hinged cover would not be capable of being opened a full 90 degrees due to installation location.

   a. Acceptable Manufacturers:
      1) Brasch
      2) Hoffman
      3) Keystone
      4) Lee Products Co.
      5) McKinstry Inc.
      6) Eldon Inc.
      7) Or equal

2.3 CONDUCTORS

A. All conductors shall be a minimum size of #12 AWG except for control wiring and fire alarm wiring where #14 AWG may be used. For all exit sign circuits, normal/emergency and/or emergency only circuits, exterior lighting circuits, and also where distance from panelboard to first outlet exceeds 80 ft. at 120 volts and 150 ft. at 277 volts, #10 AWG shall be minimum size wire allowed. All feeder and branch circuit conductor shall be color coded as follows:

1.	208Y/120V	Phase A	Black
2.	208Y/120V	Phase B	Red
3.	208Y/120V	Phase C	Blue
4.	480Y/277V	Phase A	Brown
5.	480Y/277V	Phase B	Orange
6.	480Y/277V	Phase C	Yellow
7.	Grounded Conductor		
		120/208	White
		277/480	Grey
8.	Equipment Ground		
		120/208	Green
		277/480	Green with Yellow Trace
9.	Isolated Ground	120/208	Green with Orange Trace

B. All conductors not installed in accordance with color scheme shall be replaced. All conductors larger than #6 AWG must be identified with colored tape.

C. Comply with CMR 527, Massachusetts Electrical Code.

D. Comply with Underwriter's Laboratories (UL) standards:
1. UL 4: Armored Cable.
2. UL 62: Flexible Cord and Fixture Wire.
3. UL 83: Thermoplastic-Insulated Wires and Cables.
4. UL 486A: Wire Connectors and Soldering Lugs for Use with Copper Conductors.
5. UL1569: Metal -Clad Cables.

E. Comply with NEMA WC-5: Thermoplastic-Insulated Wire and Cable for the Transmission and Distribution of Electrical Energy.

F. Connections throughout the entire job shall be made with solderless type devices.
1. For #10 AWG and smaller: spring type.
2. For #8 AWG and larger: circumferential compression type.
3. Acceptable manufacturers:
4. 3M "Scotchlock"
   a. IDEAL "Wingnut"
   b. BURNDY
   c. MAC

d. Or equal

5. Any splices made up in ground mounted pull boxes shall be resin cast waterproof type or waterproof pressure type, as manufactured by King Technology, St. Louis, MO.

G. Conductors shall be copper, soft drawn, and annealed of 98 percent conductivity. Conductors larger than #10 AWG shall be stranded; #10 AWG and smaller shall be solid. Conductors shall be insulated for 600 volts and be of following types:

1. All conductors shall have heat/moisture resistant thermoplastic insulation type THHN/THWN (75 degrees C) except as follows:

a. In sizes #1 AWG and larger: Crosslinked polyethylene insulation type XHHW (75 degrees C – 90 degrees C) may be used.

b. Fire alarm system conductors shall be #14 AWG, type THHN, solid. Color coding of fire alarm conductors shall be in accordance with fire codes.

c. Fixture whips #16AWG type "SF".

H. Stranded conductors for all wiring systems except fire alarm will be allowed if installed and terminated as specified under Execution Section.

I. Mineral-Insulated Metal-Sheathed Fire-Resistive Cables (Type MI) - Cables shall consist of a factory assembly of one or more solid copper conductors insulated with highly-compressed magnesium oxide and enclosed in a seamless, liquid-and-gas-tight continuous copper sheath. Cables shall be rated for 600 volts and less. Cables shall comply with Article 332 of the National Electrical Code. Cables shall be classified by Underwriters Laboratories, Inc. as having a 2-hour fire resistive rating. Cable terminations shall be made with UL listed mineral-insulated cable fittings. Approved Manufacturer - Pyrotenax USA, Inc. or approved equal.

J. Type MC Cable may be used for concealed branch circuits where allowed by code if installed and terminated as specified under Execution Section. Armor shall be galvanized steel and shall be UL listed for 2 hour fire wall penetration. Light steel armor is acceptable. Aluminum armor is not acceptable.

K. Fire alarm low energy plenum rated cable is acceptable for fire alarm for concealed locations where allowed by code and not subject to damage.

L. Acceptable manufacturers:

1. AFC Cable Systems
2. Cornish
3. Cresent
4. General Cable
5. Okonite
6. Or equal

M. Installation of conductors and cables

1. Install all power and 120 volt control wire and cable in approved raceways. When low tension wiring is run exposed, install it in conduit. Plenum rated low tension cable may be used for installation above suspended ceilings where it is allowed by the Code and is allowed in the specification for the specific system.
   a. Wire Size:
      1) Install minimum No. 12 AWG for power and lighting circuits.
      2) Install minimum No. 10 AWG for 120 volt 20 ampere branch circuits of 75 feet to 150 feet length, and minimum No. 8 AWG for the circuits of 150 feet to 250 feet unless otherwise shown on the drawings or required by the equipment shop drawings.
      3) Install minimum No. 10 AWG for 277 volt 20 ampere branch circuits of more than 150 feet unless otherwise shown on the drawings.
2. Metal clad cable type MC may be used for branch circuit wiring above suspended ceilings and for device wiring in the metal stud partitions. MC cable shall not be used for a termination at the panels (homeruns) and where they run exposed. Any wiring associated with Smoke control systems can not be installed in MC cable as it does not meet 780 CMR Section 909.12.1.
3. Bundle conductors #10 and smaller in branch circuit panelboards, signal cabinets, signal control boards in switchboards and motor control centers.
4. Homerun Circuits:
   a. Follow homerun circuit numbers shown on the drawings to connect circuits to the panelboards. Where homerun circuit numbers are not shown on the drawings, divide similar types of connected loads among phase busses so that currents in each phase are within 10% of each other during normal usage.
   b. Wire multi-wire branch circuit homerun with two or three single phase and one common neutral conductor to a panel in a such manner that each phase circuit is fed from the adjacent circuit breakers. Do not combine circuits so that any homerun has more than three circuits (total of five wires) installed in one conduit, unless the circuit conductors are de-rated in strict accordance with the referenced Electrical Code.
   c. Branch circuit wiring in the classrooms, laboratories and offices shall be provided with a dedicated neutral conductor for each phase conductor.
5. Properly group feeders, branch circuit and auxiliary system wiring passing through pull boxes and/or being made up in panelboards; neatly bind each group of wires together with plastic cable ties, and trim loose ends of the ties.
6. Peel branch circuits and auxiliary system wiring out of the wiring gutters at the terminal cabinet and panels at 90 degrees to circuit breakers and terminal lugs before making connections.
7. Color code conductors No. 6 AWG and larger by applying colored plastic tape at ends and where connections and splices are made. Wrap tape around the conductor three complete turns.
8. Splices and Terminations:
   a. Make splices and joints by means of UL-listed, solderless connectors rated 600 volt, of sizes and types required by manufacturer's recommendations, with temperature ratings equal to that of wire.

b. Attach copper wire to panelboards, switchboards, disconnect switches and other electrical equipment by means of bolt-on lugs with hex screws. Properly size lugs; do not cut strands from a conductor in order to fit conductor into a lug.

c. Connectors for cables 250 MCM and larger shall have two clamping elements and terminals for bus connections shall have two bolt holes.

9. Identification: Identify and color-code conductors and cables according to Division 26 Section "Identification for Electrical Systems." Label feeder and branch circuits in pull and junction boxes, handholes and at cable terminations in the panelboards, motor control centers, and switchboards. Use non-ferrous tags or labels stamped or printed to correspond with markings on the drawings or marked so that feeder or cable may be identified readily. If suspended tags are provided, attach with nylon line or cable lacing.

10. Connect branch circuits to the breakers in multi-phase panelboards required to balance loads.

11. Provide handle ties for multiwire branch circuits as required in the NEC

12. Low Tension Cables: Provide separation from power wiring and lighting fixtures as follows:

    a. Lighting fixtures - at least 6 inches.

    b. Power branch circuit wiring with MC type cable - at least 12 inches.

    c. Power branch circuit wiring in metal conduit - at least 6 inches.

13. When low-tension cables are not in conduit or trays, support cables from the deck and/or beams, spacing supports no farther apart than 6'-0" on center. Provide hangers, clips or other approved method of grouping the cables and keeping them away from other systems. Take care to ensure that ties, clips and other support devices do not compress the cable or damage cable insulation; use J-hooks whenever possible.

14. Cable Supports:

    a. Provide cable supports for vertical feeders required by the referenced Electrical Code.

    b. Support vertical feeders at each floor level.

    c. Support and secure metal-clad cable Type MC at intervals not exceeding 6 feet and within 12 inches from every outlet box, junction box or cabinet.

    d. Support metal clad cable Type MC with cable supports equal to Caddy WMX-6, MX-3, and clamps equal to Caddy 449. Where cables are supported by the structure and only need securing in place, then cable ties will be acceptable.

15. Conceal cables in finished walls, ceilings, and floors, unless otherwise indicated.

16. Use manufacturer-approved pulling compound or lubricant where necessary; compound used must not deteriorate conductor or insulation. Do not exceed manufacturer's recommended maximum pulling tensions and sidewall pressure values.

17. Use pulling means, including fish tape, cable, rope, and basket-weave wire/cable grips, that will not damage cables or raceway.
18. For wiring in high temperature areas or high temperature equipment (i.e. boiler rooms, water heaters/boosters), furnish conductors for 90°C dry and wet rating.

2.4 ACCESS PANELS

A. Refer to section 083100 – ACCESS DOORS AND PANELS for requirements.

B. Provide access panels for access to concealed junction boxes and to other concealed parts of system that require accessibility for operation and maintenance. In general, electrical work shall be laid out so access panels are not required. Provide fire rated panels for rated partitions, shafts, etc.

2.5 SLEEVES, INSERTS, AND OPENINGS

A. Sleeves: Provide sleeves of proper sizes for all openings required in concrete floors and walls. Sleeves passing through floors shall be set with top of sleeve 1 in. above finished floor. Core drilling will also be acceptable if in accordance with any structural standards. Any unsleeved openings shall be waterproofed.

B. Inserts: Provide inserts or other anchoring devices in concrete and masonry construction to support raceways and equipment.

C. Openings: Where an opening is required in concrete slabs to allow passage of a multitude of raceways, give adequate notice to General Contractor.

D. Acceptable Manufacturers:
1. Specified Technologies Inc.
2. Thomas & Betts
3. International Protective Coatings Corp.
4. 3M Fire Protection Products
5. Dow Corning
6. Or equal

2.6 FLOOR OUTLETS (FLUSH TYPE)

A. Section includes flush floor boxes equal to Wiremold RFB Series. Provide appropriate floor box model that meets the intent of what is shown on the drawings.

B. Quality Assurance
1. Electrical Raceways and Components: Comply with requirements of applicable local codes, NEC, UL, and NEMA Standards pertaining to raceways and components. Listed and labeled in accordance with NFPA 70, Article 100.

C. Floor Boxes

1. RFB4 and RFB4-4DB Series Floor Boxes: Manufactured from stamped steel and approved for use on above grade floors. The box shall be 12-3/4" L x 10" W x 3-7/16" H [324mm x 254mm x 87mm]. Provide the box with four (4) independent wiring compartments that allow capacity for up to four (4) duplex receptacles, communication and/or audio/video services. The RFB4 Series Box shall permit tunneling from end power compartment to end power compartment. The RFB4-4DB Series Box shall permit tunneling from adjacent or opposite compartments. Two (2) of the four (4) compartments shall have a minimum wiring capacity of 16.4 cu in [269cu cm], one (1) compartment shall have a minimum capacity of 32.3 cu in [529cu cm], and one (1) compartment shall have a minimum capacity of 50 cu in [820cu cm]. Four (4) compartments shall have a minimum of two (2) inches of space behind the device plates. The box shall include the following number of conduit knockouts: one (1) 1/2-inch [12.7mm], three (3) 1-inch [25mm], six (6) 3/4-inch [19.1mm], and six (6) 1-1/4-inch [32mm]. The box shall be fully adjustable, providing a maximum of 1-7/8-inch [47.7mm] pre-pour adjustment, and a maximum of 3/4-inch [19.1mm] after-pour adjustment. The box shall include a series of device mounting plates that will accept both duplex power devices as well as plates that will accommodate Ortronics® workstation connectivity outlets and modular adapters, Legrand AVIP audio/video device plates, and other open system devices.
2. RFB4-CI-1 and RFB4-CI-NA Series Floor Boxes: Manufactured from cast-iron and approved for use on grade and above grade floors. The box shall be 14-1/2" L x 11-7/8" W x 3-7/16" H [368mm x 302mm x 87mm]. Provide the box with four (4) independent wiring compartments that allow capacity for up to four (4) duplex receptacles and/or communication services. The box shall permit tunneling from adjacent or opposite compartments. Two (2) of the four (4) compartments shall have a minimum wiring capacity of 27 cu in [443cu cm], and two (2) compartments shall have a minimum wiring capacity of 36 cu in [590cu cm]. Four (4) compartments shall have a minimum of two (2) inches of space behind the device plates. The box shall include the following number of conduit hubs: four (4) 1-inch [25mm] and four (4) 1-1/4-inch [32mm]. The box shall be fully adjustable, providing a maximum of 1-7/8-inch [48mm] pre-pour adjustment, and a maximum of 3/4-inch [19.1mm] after-pour adjustment. The box shall include a series of device mounting plates that will accept both duplex power devices as well as plates that will accommodate Ortronics® workstation connectivity outlets and modular adapters, Legrand AVIP audio/video device plates, and other open system devices.
3. RFB4-SS Series Floor Boxes: Manufactured from stamped-steel and approved for use on above grade floors. The box shall be 13-5/8" L x 10" W x 2-7/16" H [346mm x 254mm x 62mm]. Provide the box with four (4) independent wiring compartments that allow capacity for up to four (4) duplex receptacles, communication and/or audio/video services. The box shall permit feed through tunneling from adjacent compartments. Two (2) of the four (4) compartments shall have a minimum wiring capacity of 15.7 cu in [257cu cm] and two (2) compartments shall have a minimum wiring capacity of 31.2 cu in [511cu cm]. Four (4) compartments shall have a minimum of two (2) inches of space behind the device plates. The box shall contain the following number of conduit knockouts: two (2) 1/2-inch [12.7mm], six (6) 3/4-inch [19.1mm], and eight (8) 1-inch [25mm]. The box shall be fully adjustable, providing a maximum of 1-7/8-inch [48mm] pre-pour adjustment, and a maximum of 3/4-

inch [19.1mm] after-pour adjustment. The box shall include a series of device mounting plates that will accept both duplex power devices as well as plates that will accommodate Ortronics® workstation connectivity outlets and modular adapters, Legrand AVIP audio/video device plates, and other open system devices.

4. RFB4E Series Floor Boxes: Manufactured from stamped steel and approved for use on above grade floors. The box shall be 13-1/8" L x 13-1/8" W x 4-1/16"" H [333mm x 333mm x 103mm]. Provide the box with four (4) independent wiring compartments that allow capacity for up to four (4) duplex receptacles, communication and/or audio/video services. The box shall permit feed through removable barriers from adjacent compartments. Four (4) compartments shall have a minimum wiring capacity of 75 cu in [1230cu cm]. Four (4) compartments shall have a minimum of 3-1/2 inches of space behind the device plates. The box shall contain the following number of conduit knockouts: six 3/4-inch [19.1mm], ten (10) 1-inch [25mm], and eight (8) 1-1/4-inch [32mm]. The box shall have two removable knockout plates that can be replaced with a 2-inch trade size conduit hub (2HUB). The box shall be fully adjustable, providing a maximum of 2-inch [35mm] pre-pour adjustment, and a maximum of 3/4-inch [19.1mm] after-pour adjustment. The box shall include a series of device mounting plates that will accept both duplex power devices as well as plates that will accommodate Ortronics workstation connectivity outlets and modular adapters, Legrand AVIP audio/video device plates, and other open system devices.
5. RFB4E-OG Series Floor Boxes: Manufactured from stamped steel and painted with a fusion-bonded epoxy designed for use on metal reinforcement bar and related accessories before encapsulation in concrete, and approved for use on grade and above grade floors. The box shall be 13-1/8" L x 13-1/8" W x 4-1/16" H [333mm x 333mm x 103mm]. Provide the box with four (4) independent wiring compartments that allow capacity for up to four (4) duplex receptacles, communication and/or audio/video services. The box shall permit feed through removable barriers from adjacent compartments. Four (4) compartments shall have a minimum wiring capacity of 75 cu in [1230cu cm]. Four (4) compartments shall have a minimum of 3-1/2 inches of space behind the device plates. The box shall contain the following number of conduit knockouts: six 3/4-inch [19.1mm], ten (10) 1-inch [25mm], and eight (8) 1-1/4-inch [32mm]. The box shall have two removable knockout plates that can be replaced with a 2-inch trade size conduit hub (2HUB). The box shall be fully adjustable, providing a maximum of 2-inch [35mm] pre-pour adjustment, and a maximum of 3/4-inch [19.1mm] after-pour adjustment. The box shall include a series of device mounting plates that will accept both duplex power devices as well as plates that will accommodate Ortronics workstation connectivity outlets and modular adapters, Legrand AVIP audio/video device plates, and other open system devices.

6. RFB6 Series Floor Boxes: Manufactured from stamped steel and approved for use on above grade floors. The box shall be 13-1/8" L x 12-1/2" W x 3-1/4" H [333mm x 317mm x 83mm]. Provide the box with six (6) independent wiring compartments that allow capacity for up to six (6) duplex receptacles, communication and/or audio/video services. The box shall permit feed through tunneling from adjacent compartments. Two (2) of the six (6) compartments shall have a minimum wiring capacity of 23 cu in [376cu cm] and four (4) compartments shall have a minimum wiring capacity of 52cu in [850cu cm]. Four (4) of the six (6) compartments shall have a minimum of 3-1/4 inches of space behind the device plates and two (2) of the six (6) compartments shall have a minimum of 2-3/8 inches of space behind the device plates. The box shall contain the following number of conduit knockouts: twelve 3/4-inch [19.1mm], four (4) 1-inch [25mm], and twelve 1-1/4-inch [32mm]. The box shall be fully adjustable, providing a maximum of 1-3/8-inch [35mm] pre-pour adjustment, and a maximum of 3/4-inch [19.1mm] after-pour adjustment. The box shall include a series of device mounting plates that will accept both duplex power devices as well as plates that will accommodate Ortronics workstation connectivity outlets and modular adapters, Legrand AVIP audio/video device plates, and other open system devices.
7. FB6-OG Series Floor Boxes: Manufactured from stamped steel and painted with a fusion-bonded epoxy designed for use on metal reinforcement bar and related accessories before encapsulation in concrete, and approved for use on grade and above grade floors. The box shall be 13-1/8" L x 12-1/2" W x 3-1/4" H [333mm x 317mm x 83mm]. Provide the box with six (6) independent wiring compartments that allow capacity for up to six (6) duplex receptacles, communication and/or audio/video services. The box shall permit feed through tunneling from adjacent compartments. Two (2) of the six (6) compartments shall have a minimum wiring capacity of 23 cu in [376cu cm] and four (4) compartments shall have a minimum wiring capacity of 52cu in [850cu cm]. Four (4) of the six (6) compartments shall have a minimum of 3-1/4 inches of space behind the device plates and two (2) of the six (6) compartments shall have a minimum of 2-3/8 inches of space behind the device plates. The box shall contain the following number of conduit knockouts: twelve 3/4-inch [19.1mm], four (4) 1-inch [25mm], and twelve 1-1/4-inch [32mm]. The box shall be fully adjustable, providing a maximum of 1-3/8-inch [35mm] pre-pour adjustment, and a maximum of 3/4-inch [19.1mm] after-pour adjustment.

   The box shall include a series of device mounting plates that will accept both duplex power devices as well as plates that will accommodate Ortronics workstation connectivity outlets and modular adapters, Legrand AVIP audio/video device plates, and other open system devices.
8. RFB6E Series Floor Boxes: Manufactured from stamped steel and approved for use on above grade floors. The box shall be 13-1/8" L x 12-1/2" W x 4" H [333mm x 317mm x 102mm]. Provide the box with six (6) independent wiring compartments that allow capacity for up to six (6) duplex receptacles, communication and/or audio/video services. The box shall permit feed through tunneling from adjacent compartments through 1-1/4-inch grommet openings. Two (2) of the six (6) compartments shall have a minimum wiring capacity of 23 cu in [376cu cm] and four (4) compartments shall have a minimum wiring capacity of 52cu in [850cu cm]. Four (4) of the six (6) compartments shall have a minimum of 3-1/4 inches of space behind the device plates and two (2) of the six (6) compartments shall have a minimum of 2-3/8 inches of space behind the device plates. The box shall contain the following number of

conduit knockouts: twelve 3/4-inch [19.1mm], four (4) 1-inch [25mm], and twelve 1-1/4-inch [32mm]. The box shall be fully adjustable, providing a maximum of 1-3/8-inch [35mm] pre-pour adjustment, and a maximum of 3/4-inch [19.1mm] after-pour adjustment. The box shall include a series of device mounting plates that will accept both duplex power devices as well as plates that will accommodate Ortronics workstation connectivity outlets and modular adapters, Legrand AVIP audio/video device plates, and other open system devices.

9. RFB6E-OG Series Floor Boxes: Manufactured from stamped steel and painted with a fusion-bonded epoxy designed for use on metal reinforcement bar and related accessories before encapsulation in concrete, and approved for use on grade and above grade floors. The box shall be 13-1/8" L x 12-1/2" W x 4" H [333mm x 317mm x 102mm]. Provide the box with six (6) independent wiring compartments that allow capacity for up to six (6) duplex receptacles, communication and/or audio/video services. The box shall permit feed through tunneling from adjacent compartments. Two (2) of the six (6) compartments shall have a minimum wiring capacity of 23 cu in [376cu cm] and four (4) compartments shall have a minimum wiring capacity of 52cu in [850cu cm]. Four (4) of the six (6) compartments shall have a minimum of 3-1/4 inches of space behind the device plates, and two (2) of the six (6) compartments shall have a minimum of 2-3/8 inches of space behind the device plates. The box shall contain the following number of conduit knockouts: twelve 3/4-inch [19.1mm], four (4) 1-inch [25mm], and twelve 1-1/4-inch [32mm]. The box shall be fully adjustable, providing a maximum of 1-3/8-inch [35mm] pre-pour adjustment, and a maximum of 3/4-inch [19.1mm] after-pour adjustment.

   The box shall include a series of device mounting plates that will accept both duplex power devices as well as plates that will accommodate Ortronics workstation connectivity outlets and modular adapters, Legrand AVIP audio/video device plates, and other open system devices.

D. Activation Covers

1. FloorPort FPCT, FPBT, and FPFFT Series Covers: Manufactured of die-cast aluminum or die-cast zinc, and available in brushed aluminum finish and powder-coated paint finishes (black, gray, bronze, nickel and brass). Activation covers shall be available in flanged and flangeless versions. Covers shall be available with options for tile or carpet inserts, or flush covers. The cover's hinge shall allow for the cover to open 180 degrees. The furniture feed covers shall come equipped with one (1) 1-inch trade size screw plug opening and one (1) combination 1-1/4-inch and 2-inch trade size screw plug.

   a. Flanged covers shall be 7-3/4" L x 6-9/16" W [197mm x 167mm].

   b. Flangeless covers shall be 6-3/4" L x 5-9/16" W [171mm x 142mm].

2. 6CT, 6CTC, 6CFFTC, 8CTC, and 8CT Series Covers: Manufactured of die-cast aluminum alloy and available in powder-coated gray, black, brass, nickel or bronze finish. The covers shall be available in carpet and tile versions. Provide covers with two (2) gaskets (one (1) for carpet and one (1) for tile) to go under the trim flange to maintain scrub water tightness. The activation cover for the 8CTC and 8CT series shall be 9-1/4-inch [235mm] in diameter. The activation cover for the 6CT and 6CTC series shall be 7-1/4-inch [184mm] in diameter and the activation cover for the 6CFFTC series shall be 7-3/4-inch [197mm] in diameter. The carpet covers shall be surface mounted and the tile

covers shall be flush with the finished floor covering. The covers shall have spring loaded slides to allow cables to egress out of the unit and maintain as small an egress opening as possible.

3. The covers shall have been evaluated by UL to meet the applicable U.S. and Canadian safety standards for scrub water exclusion when used on tile, terrazzo, wood, and carpet covered floors.

E. Communication Modules Mounting Accessories

1. The floor box manufacturer shall provide a complete line of faceplates and bezels to facilitate mounting of UTP, STP (150 ohm), fiber optic, coaxial, and communication devices. The box shall provide a series of device mounting plates that will accommodate Ortronics workstation connectivity outlets and modular adapters, and other open system devices.

F. Installation

1. Strictly comply with manufacturer's installation instructions and recommendations and approved shop drawings. Coordinate installation with adjacent work to ensure proper clearances and to prevent electrical hazards.
2. Mechanical Security: Raceway systems shall be mechanically continuous and connected to all electrical outlets, boxes, device mounting brackets, and cabinets, in accordance with manufacturer’s installation sheets.
3. Accessories: Provide accessories as required for a complete installation, including insulated bushings and inserts where required by manufacturer.
4. Unused Openings: Close unused box openings using manufacturer's recommended accessories.
5. Provide a minimum concrete pour depth of 3-7/16-inch [87mm] plus 1/16-inch [1.6mm] above the top of the box for the RFB4, RFB4-4DB, RFB2, and the RFB2-OG Series Boxes; 2-7/16-inch [62mm] plus 1/16-inch [1.6mm] for the RFB4-SS and RFB2-SS Series Boxes; and 3-7/16-inch [87mm] plus 13/16-inch [21mm] above the top of the box for the RFB4-CI-1, RFB6, and RFB6-OG Series Boxes; and 4-1/16-inch [103mm] above the top of the RFB4E and RFB4E-OG Series Boxes; and 4-inch [102mm] above the top of the RFB6E and RFB6E-OG Series Boxes. Provide the box with four (4) locations to accommodate leveling for pre-concrete pour adjustment and include four (4) leveling screws for the pre-pour adjustment.

G. Poke-Through Assemblies:

1. Manufacturers: Subject to compliance with requirements, provide products by one of the following:
   a. Hubbell.
   b. Pass & Seymour.
   c. Thomas & Betts Corporation.
   d. Wiremold

2. Poke-Thru Assembly
   a. Floor Fitting
      1) The floor fitting shall consist of an insert and an activation cover. Floor fitting shall accommodate power and communications services in a single unit. Floor fitting shall have one ¾" trade size channel for power and one 2" trade size channel for communication cabling. Floor fitting shall consist of intumescent fire stop material to maintain the fire rating of the floor slab and UL Listed with a fire rating of 1, 1½, & 2 hours in an unprotected reinforced concrete floor or a 1 or 2 hour rating in floors employing steel floor units and concrete topping. The floor fitting shall be suitable in concrete floor thicknesses of 2.5" or greater. The insert shall have 12 installation barbs that will hold the poke-thru device in the floor slab without additional fasteners.
   b. Insert Body
      1) The insert body shall allow the devices to be recessed 3.5-inches, or 2.25-inches with the use of 1 ¼" supplied stand-offs. There shall be complete separation of channels allowing for individual separation of power and communications services. There shall be one channel arranged such that communication cables can be conduit protected and connected with a 2-inch trade size openings to accept both rigid and flexible conduit connectors. The inserts shall consist of multiple compartments that allow for up to 2 duplex receptacles that can be wired in configurations including standard receptacles, isolated ground or up to 12 communication ports.
   c. Activation Cover/ Flange Assembly
      1) Activation covers and Flange shall be manufactured of die-cast aluminum alloy and be capable of being plated in brushed brass, satin nickel, and bronze finish, lacquer coated brushed aluminum or powder-coated in , black, finishes. Flange shall be suitable for either carpet, tile, terrazzo and wood covered floors. Flange shall include a gasket adhered to the top inside surface to maintain scrub water tightness with sub plates. Flange shall include a gasket for assembly against the floor to maintain scrub water tightness. Cover assembly shall provide a single hinged access doors that rotate 180 degrees flush with flange and incorporate foam gaskets to maintain scrub water tightness by preventing water, dirt, and debris from entering the power and communication compartment. Cover assembly shall feature cable access doors which secure to the underside of the closed cover that allow each cable access door to be opened and closed independently
   d. Communication Modules Mounting Accessories
      1) The poke-through manufacture shall have available modular inserts to facilitate mounting UTP (including Category 5, 5e, 6, 6a), STP, fiber optic, coaxial, and data/communications devices. The S1R6 series shall accommodate Extron MAAP or Extron AAP adapter plates. Where indicated provide connectivity outlets and modular inserts by Hubbell or approved equal.

H. FURNITURE FEED POKE-THRU DEVICES

1. Poke-Through Assemblies:

   a. Manufacturers: Subject to compliance with requirements, provide products by one of the following:

      1) Hubbell.
      2) Pass & Seymour.
      3) Thomas & Betts Corporation.
      4) Wiremold

2. Classification and Use: Furniture feed poke-thru devices shall have been examined and tested by Underwriters Laboratories Inc. to meet UL514A and/or UL514C and Canadian Standard C22.2, No. 18-98 and bear the U.S. and Canadian UL Listing Mark. Furniture poke-thru devices shall also have been tested by Underwriters Laboratories Inc. and Classified for fire resistance and bear the U.S. and Canadian UL Classification Mark. Poke-thru devices are approved for use in recessed and flush floor construction and meet and exceed the UL scrub water exclusion test.

   a. Devices shall be classified for use in 1-, 1-1/2-, or 2-hour rated, unprotected reinforced concrete floors and 1-, 1-1/2-, or 2-hour rated floors employing unprotected steel floor units and concrete toppings (D900 Series designs), or concrete floors with suspended ceilings. Fire resistive designs with suspended ceilings shall have provisions for accessibility in the ceiling below the poke-thru fittings.

   b. These devices are not suitable for wet or damp locations, or other areas subject to saturation with water or other liquids such as commercial kitchens.

   c. Floor boxes shall be suitable for use in air handling spaces in accordance with Section 300-22(c) of the National Electrical Code.

3. MATERIALS

   a. RC7AFFTC Flush Furniture Feed Poke-Thru Assembly for power: Consists of an insert and activation cover. Overall poke-thru assembly length shall be 16-1/2" [419mm].

      1) Insert: Insert body shall have the necessary channels to provide complete separation of power and communication services. There shall be one (1) 3/4-inch trade size channel for power and two (2) 1/2-inch trade size channels for communication cabling. The channels shall be arranged such that communication cables can be conduit protected and connected to the insert body using a die-cast zinc conduit connector with two (2) 1/2-inch trade size threaded openings to accept both rigid and flexible conduit connections.

a) The body will consist of an intumescent fire stop material to maintain the fire rating of the floor slab. The intumescent material will be held securely in place in the insert body and shall not have to be adjusted to maintain the fire rating of the unit and the floor slab. Insert shall have a spring-steel retaining ring that will hold the poke-thru device in the floor slab without additional fasteners. The poke-thru insert shall also consist of one (1) 3/4-inch trade size conduit stub and one 1-1/2-inch trade size conduit stub that are connected to the insert body. There shall also be a 24.5 cu in [402ml] stamped steel junction box for wire splices and connections. The stamped steel junction box shall also contain the necessary means to electrically ground the poke-thru assembly.

2) Activation Cover: The activation cover shall provide three (3) conduit openings to feed modular furniture applications and provide a flush appearance. The activation cover trim flange shall be one-piece and be manufactured of forged aluminum alloy and be capable of being powder coated or plated. Coated finish is to be textured, two-stage epoxy paint in gray or black. Activation cover trim flange shall also be available in a solid brass forging and a die cast brushed aluminum finish. Aluminum and brass finish shall be a brushed finish with a lacquer sealant. The activation cover shall be seven (7) inches [178mm] in diameter. A gasket is attached to the underside of the trim flange assembly to maintain scrub water tightness by preventing water, dirt, and dust from entering the power and communication compartments.

a) The activation cover insert shall provide one (1) 3/4-inch NPSM threaded opening for power and two (2) 1/2-inch NPSM threaded openings for communication to feed modular furniture workstations. Each activation cover shall also be supplied with one (1) 3/4-inch trade size and two (2) 1/2-inch trade size threaded conduit connectors and one (1) 3/4-inch trade size and one (1) 3/4-inch trade size and two (2) 1/2-inch trade size conduit closure plugs.

b. RC9AM2TC Furniture Feed Poke-Thru Assembly for data: Consists of an insert and activation cover. Overall poke-thru assembly length shall be 10 inches [254mm].

1) Insert: There shall be one (1) 2-inch trade size channel for all power or all communication cabling. The body will also consist of an intumescent fire stop material to maintain the fire rating of the floor slab. The intumescent material will be held securely in place in the insert body and shall not have to be adjusted to maintain the fire rating of the unit and the floor slab. Insert shall have a spring-steel retaining ring that will hold the poke-thru device in the floor slab without additional fasteners.

2) Activation Cover: The activation cover shall be manufactured of aluminum die-cast alloy and consist of a trim flange and a hexagonal service head. The activation cover shall be capable of being powder coated or plated. Finish shall be textured, two-stage epoxy paint available in a gray or black finish. A gasket is attached to the underside of the activation cover trim flange to maintain scrub water tightness. Trim flange shall have a combination 1-1/4" - 2" trade size conduit opening and closure plugs. The trim flange shall be seven (7) inches [178mm] in diameter. All power connections must be made in a junction box below (not supplied).

I. Cleaning and Protection

1. Clean exposed surfaces using non-abrasive materials and methods recommended by manufacturer.
2. Protect boxes and fittings until acceptance.

2.7 WIRING DEVICES

A. Manufacturers:

1. Manufacturers' Names: Shortened versions (shown in parentheses) of the following manufacturers' names are used in other Part 2 articles:
   a. Cooper Wiring Devices.
   b. Hubbell.
   c. Leviton.
   d. Pass & Seymour.

B. Straight Blade Receptacles:

1. Duplex Receptacles: Comply with NEMA WD 1, NEMA WD 6 configuration NEMA5-20R, UL 498 and FS W-C-596. Specification grade industrial series, straight-blade, 2 pole 3 wire grounding type, back and side wired, nylon face, rated for 120 volts, 20 amperes. Hubbell No.5362 or equal. Hubbell No.5362WR or equal for weather-resistant listed receptacles. Receptacles that are controlled by an automatic control device shall be marked per NEC with the international power symbol. Provide as indicated on the drawings with one controlled face and split circuit hot tab equal to Hubbell BR20C1 series.
2. Ground fault interrupter (GFI) receptacles: Duplex receptacles conforming to UL 943, specification grade heavy duty, feed-through type, rated for 120 volt, 20 amperes, NEMA 5-20R, GFI Class "A" with a sensitivity to leakage 5 milliamps, weather-resistant and tamper-resistant listed. Hubbell No. GF20LA or equal.
3. Transient-Voltage Surge-Suppressor (TVSS) Receptacles: Duplex type, NEMA 5-20R configuration, with integral transient-voltage surge protection in a minimum of 3 modes: line-to-ground, line-to-neutral, and neutral-to-ground; listed as complying with UL 1449. Hubbell HBL5362SA or equal.
4. Tamper-Resistant Convenience Receptacles, 125 V, 20 A: Specification grade, straight-blade, 2 pole 3 wire grounding type, back and side wired. Comply with NEMA WD 1, NEMA WD 6 configuration 5-20R, and UL 498. Listed as tamper-resistant with “T” marking. Hubbell BR20TR or equal.

5. Isolated-Ground, Duplex Convenience Receptacles, 125 V, 20 A: Comply with NEMA WD 1, NEMA WD 6 configuration 5-20R, and UL 498. Straight blade; equipment grounding contacts connected only to the green grounding screw terminal of the device, with inherent electrical isolation from mounting strap. Hubbell CR 5253IG or equal.
6. Duplex Receptacles with Integral USB jacks, 125 V, 20 A: Specification grade, straight-blade, 2 pole 3 wire grounding type, back and side wired. Comply with NEMA WD 1, NEMA WD 6 configuration 5-20R, and UL 498. “USB” marking indicates USB receptacle duplex grounding type NEMA 5-20R equal to Hubbell MX20X2 or equal

C. All standard 15 and 20 ampere, 125 and 250 volt non-locking type receptacles located 5’-6” or below within Auditorium, Gymnasium, Pre-schools and elementary school age classrooms, medical clinic areas, dental offices and any other areas that are listed in NEC 406.12 shall be tamper resistant type receptacles whether indicated or not by the “T” marking on the drawings.

D. Exterior Outlets with Lockable Covers:
1. Provide exterior outlets with lockable covers at all exterior outlet locations. Provide GFCI Circuit Breakers on all branch circuits. Provide in-use weatherproof locking covers.

E. Hazardous (Classified) Location Receptacles:
1. Wiring Devices for Hazardous (Classified) Locations: Comply with NEMA FB 11 and UL 1010.
   a. Manufacturers: Subject to compliance with requirements, provide products by one of the following:
      1) Cooper Crouse-Hinds.
      2) Appleton Electric.
      3) Hubbell.
      4) KH Industries.

F. Twist-Locking Receptacles:
1. Single Convenience Receptacles, 125 V and 250 V, 20 A: Comply with NEMA WD 1, NEMA WD6 and UL 498. Hubbell HBL2310 (L5-20R), HBL2320 (L6-20R), or equal.

G. Controlled Receptacles:
1. Leviton 5362 – S1 (one controlled outlet)
2. Leviton 5362-S2 (two controlled outlet)
3. Pass & Seymour 5362-CH (one controlled outlet)
4. Pass & Seymour 5362-CD (two controlled outlet)
5. Arrowhart 5362-CH (one controlled outlet)
6. Arrowhart 5362-CD (two controlled outlet)
7. Hubbell BR20C1 (one controlled outlet)
8. Hubbell BR20C2 (two controlled outlet)

H. Cord Reels

1. Manufacturers: Subject to compliance with requirements, provide products by one of the following:
   a. Hubbell.
   b. Cooper Crouse-Hinds.
   c. Appleton Electric.
   d. KH Industries.
2. Industrial grade retractable power cord reel with the following features:
   a. Cast Aluminum construction, including mounting base
   b. 12 position adjustable guide arm
   c. Adjustable ratchet can be engaged (positive lock) or disengaged (constant tension) as needed
   d. Adjustable ball stop
   e. 6' Feeder Cord included
   f. White powder-coat finish
   g. Universal mounting overhead, wall or detached from bracket completely.
   h. Adjustable cable stop.
   i. Voltage 125 VAC
   j. Slip Ring Rating 600V/30A
   k. Payout End Blk Duplex/Duplex Outlet Box
   l. Feeder End 5-20P
   m. Max. Amperage 20 Amps
   n. Gauge/Conductor 12/3
   o. Cord Length 25 Feet
   p. Mounting Bracket with 340° pivot base.
   q. Cord Type/Color SJO/White Cord Reel
   r. Color White
   s. Hubbell Model#HBLI25123GF220M1 or equal.
3. For WP Cord Reel provide as follows:
   a. Hubbell Model#HBLW25123 or equal.
   b. Hubbell Model#HBLPOB1 receptacle enclosure
   c. Install two duplex receptacles in receptacle enclosure.
   d. Provide GFCI type circuit breaker for all WP Cord Reels

I. Snap Switches:
1. Comply with NEMA WD 1 and UL 20.
2. Switches, heavy duty, side wired, 120/277V, 20A:
3. Products: Subject to compliance with requirements, provide one of the following:
   a. Cooper; 2221 (single pole), 2222 (two pole), 2223 (three way).
   b. Hubbell; C1221 (single pole), C1222 (two pole), C1223 (three way).
   c. Leviton; 1221-2 (single pole), 1222-2 (two pole), 1223-2 (three way).

d. Pass & Seymour; 20AC1 (single pole), 20AC2 (two pole), 20AC3 (three way).

J. Securely fasten wiring devices in place, plumb, level, and true to finished lines and surfaces.

K. Device Plates: Do not use oversized or extra-deep plates. Repair wall finishes and remount outlet boxes when standard device plates do not fit flush or do not cover rough wall opening.

L. Provide gaskets on all wiring device plates where devices are on walls separating conditioned and non-conditioned spaces and exterior walls.

M. Composition material of wiring devices to be nylon with ivory finish. Outlets intended for computer use shall be grey finish, outlets on emergency shall be red finish, outlets in auditorium shall be brown.

N. Wall Plates:

1. Single and combination types to match corresponding wiring devices.
   a. Plate-Securing Screws: Metal with head color to match plate finish.
   b. Material for Finished Spaces: Satin-finished Type 302 stainless steel.
   c. Material for Unfinished Spaces: Galvanized steel.
   d. Material for Damp Locations: Cast aluminum with spring-loaded lift cover, and listed and labeled for use in "wet locations."
   e. Material for Auditorium Locations: Satin bronze.
2. Wet-Location, Weatherproof Cover Plates: NEMA 250, complying with type 3R weather-resistant, die-cast aluminum.

O. Finishes:

1. Color: Wiring device catalog numbers as specified do not designate device color.
   a. Wiring Devices Connected to Normal Power System: As selected by Architect, unless otherwise indicated or required by referenced Electrical Code or device listing.
   b. Wiring Devices Connected to Emergency Power System: Red.
   c. Isolated-Ground Receptacles: Orange.

2.8 LIGHTING FIXTURES

A. General

1. Submit the following in accordance with project submittal procedures:
   a. Catalog Data: Submit catalog data describing luminaires and drivers. Include data substantiating that materials comply with specified requirements. Arrange data for luminaires in the order of fixture designation.
   b. Performance Curves/Data:
      1) Submit certified photometric data for each type of luminaire.
      2) Submit supply-air, return-air, heat-removal, and sound performance data for air handling luminaires.

c. Drawings: Submit shop drawings for non-standard luminaires.

d. Calculations: Submit as requested to support equal product proposals.

e. Warranty: Submit warranties for luminaires and for electronic ballasts.

2. All LED sources, drivers, and controls shall meet the latest utility company incentive requirements. Refer to the latest program requirements documentation and coordinate with the utility company to ensure compliance.

B. Quality Assurance

1. Comply with the National Electrical Code (NEC) and the Massachusetts Building Code (MBC) for components and installation.
2. Provide luminaires listed and labeled by a nationally recognized testing laboratory (NRTL) for the application, installation condition, and the environments in which installed.
3. Use manufacturers that are experienced in manufacturing luminaires, lamps and ballasts similar to those indicated for this Project and have a record of successful in-service performance.
4. Coordinate luminaires, mounting hardware and trim with the ceiling system.

C. LED Assemblies

1. LED luminaires shall conform to UL 1598 and to UL 8250 – Safety Standard for Light-Emitting Diode (LED) Light Sources for Use in Lighting Products.
2. Products shall be lead and mercury free.
3. Photometric characteristics shall be established using IESNA LM-79-08, IESNA Approved Method for the Electrical and Photometric Measurement of Solid-State Lighting Products.
4. Color characteristics of LED luminaires shall be as follows in accordance with ANSI C78.377 – Specifications for the Chromaticity of Solid State Lighting Products.
5. LED and driver cooling system shall be passive and shall resist the buildup of debris.
6. LED luminaire output after 50,000 hours of operation shall be not less than 70 percent of the initial lumen output when determined in accordance with IESNA LM-80-08 – IESNA approved Method for Measuring Lumen Maintenance of LED Lighting Sources.
7. LED source package electrical characteristics:
   a. Supply voltage: 120 V, 208 V, 240 V, 277 V, or 480 V as indicated on the Drawings. Provide step-down transformers if required to match driver input voltage rating.
   b. Total harmonic distortion (current): Not more than 10 percent
   c. Power factor: Not less than 90 percent
   d. RF interference: Meet FCC 47 CFR Part 15/18
   e. Transient protection: IEEE C62.41 Class A.
8. All LED Assemblies shall be provided by Osram, Phillips, GE, or equal.

D. Extra Materials

1. Furnish the following extra materials matching products installed. Package with protective covering for storage and identify with labels describing contents.
   a. Ten percent of single faced exit signs, but no fewer than ten. Include 100' of type MC cable branch circuiting and installation labor.
   b. Ten percent of double faced exit signs, but no fewer than five. Include 100' of type MC cable branch circuiting and installation labor.

E. Interior General:
1. Furnish interior luminaries that comply with requirements specified below, indicated on the Drawings to meet conditions of installation.
2. Metal parts shall be free from burrs and sharp corners and edges.
3. Metal components shall be formed and supported to prevent sagging and warping.
4. Steel parts shall be finished with manufacturer's standard finish applied over a corrosion-resistant primer. Finish shall be free from runs, streaks, stains, holidays or defects.
5. Doors and frames shall be smooth operating and free from light leakage under operating conditions. Relamping shall be possible without the use of tools. Doors, frames, lenses and diffusers shall be designed to prevent accidental falling during relamping and when secured in the operating position.
6. Luminaires shall have minimum reflecting surface reflectance as follows unless specified otherwise on the Drawings:
   a. White Surfaces: 85 percent
   b. Specular Surfaces: 83 percent
   c. Diffusing Specular Surfaces: 75 percent
7. Lenses, diffusers, covers and globes shall be 100 percent virgin acrylic unless specified otherwise on the Drawings. Lenses shall have 0.125 inch minimum thickness. Lenses for troffers shall be injection molded.
8. Luminaires shall conform to UL 1598 - *Luminaires*. Provide product with damp location listing or wet location listing by installation location.

F. Interior Accessories
1. Provide stud supports, mounting brackets, frames, plaster rings and other accessories required for luminaire installation.
2. Furnish hangers as specified below by conditions of installation:
   a. Stem hangers shall be made of 1/2-inch steel tubing with 45 degrees swivel ball hanger fitting and ceiling canopy. Finish the same as the luminaire.
   b. Rod hangers shall be made of 1/4 inch threaded zinc-plated steel rod.
3. Use NRTL-listed T-bar safety clips for lay-in luminaires.

G. Interior Installation

1. Install interior lighting system in accordance with the NEC, manufacturer's installation instructions, approved shop drawings, and NECA National Electrical Installation Standards.
2. Have the manufacturer’s installation instructions available at the Project site.
3. Mounting heights specified or indicated on the Drawings are to the bottom of the luminaire for ceiling-mounted fixtures and to the center of the luminaire for wall-mounted fixtures.
4. Where the ceiling forms the protective membrane of a fire resistive assembly, install protective coverings over luminaires in accordance with NRTL requirements.
5. Install slack safety wires as described below for luminaires in or on suspended ceilings.
   a. Wire shall be minimum 12 gage galvanized soft annealed steel wire conforming to ASTM A641.
   b. Attach wire to the building structure directly above the attachment point on the box or luminaire; make trapezes of framing channel material to span obstacles
   c. Secure wire(s) at each end with not less than three tight turns in 1-1/2 inch.
6. Support pendant-mounted or cable-supported luminaires directly from the structure above using a 9 gage wire or an approved alternate support without using the ceiling suspension system for direct support.
   a. Install seismic restraints for pendant-mounted and cable-supported luminaires.
   b. Pendants, rods, cables, or chains 4 ft or longer shall be braced to prevent swaying using three cables at 120 degrees separation.
7. Connect luminaires in suspended ceilings using 6 ft. lengths of flexible wiring method arranged accommodate not lea than 4 inch of differential seismic movement in any direction.

H. Interior Quality Control

1. Make electrical connections, clean interiors and exteriors of luminaires, install lamps, energize and test luminaires, inspect interior lighting system, and deliver spare parts in accordance with manufacturer's instructions and NECA National Electrical Installation Standards:
2. Test electronic dimming ballasts for full range dimming capability.
   a. Check for visually detectable flicker over the full dimming range.

I. Exterior - General

1. Furnish exterior luminaires that comply with requirements specified in this Section and in the luminaire schedule on the Drawings.
2. Luminaire photometric characteristics shall be based on IESNA approved methods for photometric measurements performed by a recognized photometric laboratory.

3. Luminaire housing shall be primarily metal.
   a. Metal parts shall be free from burrs and sharp corners and edges.
   b. Sheet metal components shall be fabricated from corrosion-resistant aluminum, formed and supported to prevent sagging and warping.
   c. Exposed fasteners shall be stainless steel.
4. Doors and frames shall be smooth operating and free from light leakage under operating conditions.
   a. Relamping shall be possible without the use of special tools.
   b. Doors, frames, lenses and diffusers shall be designed to prevent accidental falling during relamping and when secured in the operating position.
   c. Door shall be removable for cleaning or replacing lens.
5. Luminaires shall have minimum reflecting surface reflectance as follows unless scheduled otherwise:
   a. White surfaces: 85 percent
   b. Specular surfaces: 83 percent
   c. Diffusing specular surfaces: 75 percent
6. Provide lenses, diffusers, covers and globes as scheduled on the Drawings fabricated from materials that are UV stabilized to be resistant to yellowing and other changes due to aging or exposure to heat and ultraviolet radiation.
7. Doors shall have resilient gaskets that are heat-resistant and aging-resistant to seal and cushion lens and refractor.

J. Exterior Poles and Accessories
1. Furnish poles and accessories that comply with requirements specified in this Section and the luminaire schedule on the Drawings.
2. Pole, base, and anchorage shall carry the luminaires, supports, and appurtenances at the indicated height above grade without deflection or whipping.
3. Mountings, fastenings and other appurtenances shall be fabricated from corrosion-resistant materials that are compatible with poles and luminaires and will not cause galvanic action at contact points. Mountings shall correctly position luminaires to provide scheduled light distribution.
4. A reinforced access handhole shall be located in the wall of each metal pole.
5. A welded 1/2 inch grounding lug shall be accessible through the handhole of each metal pole. Grounding connection shall be designed to prevent electrolysis when used with copper ground wire.
6. Metal poles shall have anchor type bases and galvanized steel anchor bolts and leveling nuts.
7. Metal poles shall have a metal base cover that covers the entire base plate and anchorage.
8. Protect painted, anodized, or brushed pole finishes during shipment and installation. Minimum protection shall consist of spirally wrapping each pole shaft with protective paper secured with tape, and shipping small parts in boxes.

9. Aluminum poles shall be fabricated from corrosion resistant aluminum Alloy 6063-T6 or Alloy 6005-T5 for wrought alloys or Alloy 356-T4 for cast alloys.
    a. Poles shall be square or round, tapered or straight as indicated on the Drawings.
    b. Aluminum poles over 30 feet tall shall include factory-installed vibration dampers.
    c. Poles shall be seamless extruded or spun seamless type with minimum 0.188 inch wall thickness.
    d. Tops of shafts shall be fitted with a round or tapered cover.
    e. Base shall be anchor bolt mounted, made of cast 356-T6 aluminum alloy in accordance with ASTM B 108/B 108M, Standard Specification for Aluminum-Alloy Permanent Mold Castings and shall be machined to receive the lower end of shaft. Joint between shaft and base shall be welded.
    f. Hardware, except anchor bolts, shall be either 2024-T4 anodized aluminum alloy or stainless steel.
10. Anchor bolts shall be steel rod having minimum yield strength of 50,000 psi. The top 12 inch of the anchor bolt shall be galvanized in accordance with ASTM A153/A153M.
11. The poles EPA capacity shall meet the wind rating in the geographical area in which its installed. Refer to AASHTO wind map and provide appropriate wind rating with the paired light fixture. Wind rating shall be a minimum of 100MPH with 130MPH gust rating.
12. Manufacturers: Subject to compliance with requirements, provide products as scheduled or specified on the Drawings.
13. Fuses and Fuse holders
    a. Furnish fuse overcurrent protection for each pole-mounted luminaire to isolate faulted ballasts from the lighting circuit.
    b. Use 600 volt, Class CC, time-delay, current-limiting fuses.
    c. Select fuses rated between 200 percent and 300 percent of the luminaire ballast or driver maximum current.
    d. Manufacturer: Bussman “LP-CC” or approved equal.
14. Furnish in-line fuse holders for installation in pole hand hole or transformer base.
    a. Use non-breakaway type fuse holders unless breakaway poles are indicated on the Drawings.
    b. Use breakaway type fuse holders where breakaway poles are indicated on the Drawings.
    c. Load and line terminal sizes and types shall correspond to line and load conductor sizes and quantities.
    d. Both breakaway and non-breakaway fuse holders shall have insulating boots.
    e. Manufacturers: Ferraz Shawmut “FEC” for phase conductor(s), “FEBN” for neutral conductor, or approved equal.

K. Exterior Installation

1. Install products in accordance with manufacturer's instructions, NECA/IESNA 501, and approved shop drawings.
2. Locations of luminaires and poles shown on the Drawings are diagrammatic. Coordinate luminaire locations with building finishes, building structure, paving and striping, utility piping, security fences, and existing trees. Obtain approval for location changes through LANL Subcontract Technical Representative (STR).
3. Set poles and luminaires plumb, square, level and secure.
4. Install surface mounted luminaires directly to an outlet box which is supported from structure.
5. Install in-grade luminaires flush with surrounding surface. Coordinate pitch or grading of surface with Construction Manager to allow drainage away from fixture.
6. Install lamps in luminaires in accordance with manufacturer's instructions.
7. Pre-cast Concrete Foundations:
   a. Concrete shall be a minimum of 5,000 psi after 28 days.
   b. Electrical SubContractor shall coordinate conduit requirements, anchor bolt pattern, bolt projection, and approved light pole base including bolt covers with approved light pole prior to release of pre-cast base.
   c. Base shape shall match pole shape and shall be a minimum of 18” or 2” larger than pole base bolt covers.
   d. Comply with details on electrical drawings for dimensions, reveal above grade, and reinforcing.
   e. Provide Shea concrete products or equal.
8. Pole Erection
   a. Do not install poles without luminaires.
   b. Use fabric web slings to raise and set poles.
   c. Use leveling nuts or shims to make poles plumb. When leveling nuts are used, set the lower nuts not more than 1 inch from the concrete foundation.
   d. Tighten anchor bolt nuts and other pole hardware to torque recommended by manufacturer.
   e. After pole is leveled, pack non-shrink grout between anchor base and concrete foundation to provide a full bearing surface. Use a short piece of 1/2-inch diameter pipe to make a drain hole through grout; arrange to drain condensation from interior of pole.
   f. Set embedded poles to depth indicated on the Drawings, but not less than 1/6 of pole length below finish grade.
   g. Auger holes large enough to permit the use of tampers the full depth of the hole.
   h. Backfill in 6 inch layers and thoroughly tamp each layer so compaction of backfill is equal to or greater than that of the undisturbed earth.

2.9 THEATRICAL LIGHTING, DIMMING RACK AND CONTROLS

A. The Electrical Sub-Contractor, herein also referred to as the EC, shall provide all labor, materials, services, and equipment to set, install, interconnect, and test the dimming and control systems as shown on the drawings and as specified herein. Drawings, specifications, and other related documents shall apply to all work. EC shall provide all Theatrical lighting, dimming racks, controls, curtains and rigging, refer to section 116100.

B. Work of this Section includes, but is not limited to, the following:

1. Installation of wiring devices, back boxes, panels, conduits, wiring, dimmer racks and modules, signal cables, DMX splitters, and architectural processor provided by Division 11, including:

Division of Responsibilities	Electrical Contractor		Stage Lighting Contractor, Sections 116133, 116191, and 266111	
ITEM	Furnish	Install	Furnish	Install
High voltage conduit and wire (Line Voltage)	X	X		
High Voltage wire terminations	X	X		
High voltage wire testing and labeling	X	X		
DMX emergency by-pass controller	X	X		
DMX relay controller	X	X		
Installation of stage ECR rack and power		X	X	
Conduit for ECR rack low voltage devices	X	X		
Labeling back boxes and conduit	X	X		
Dimming System Low voltage conduit and back boxes	X	X		
Low voltage wire for dimming system		X	X	
Termination of Dimming system low voltage wire			X	X
Dimming System Control wire continuity, testing and labeling			X	X
Low voltage wire for Fire alarms, security or other	X	X		
Conduit, raceways and interconnecting boxes	X	X		
Junction Boxes	X	X		
Provide power feed and termination to Batten Hoists	X	X		
Provide conduit for batten hoist controls	X	X		
Mount Batten hoist control stations		X	X	
Low voltage wire and controls for batten hoists	X	X		
Dimmer Racks or cabinets		X	X	
Provide terminations for all dimmer load circuits	X	X		
Control Devices			X	X
Architectural Control - House lighting back boxes		X	X	
Circuit Distribution Raceways and Boxes		X	X	
Mounting of Stage Circuit Raceways to battens		X	X	X
Lighting Fixture Installation and testing			X	X
Lighting Fixture Focus			X	X

Division of Responsibilities	Electrical Contractor		Stage Lighting Contractor, Sections 116133, 116191, and 266111	
ITEM	Furnish	Install	Furnish	Install
Lighting Initial programming			X	X

2. Coordination with the System Integrator for a complete theatrical dimming system.
3. All power distribution devices, conduit and wire as required in this Section and related Specification Sections listed herein.
4. Provide all disconnects and power feeds as required for dimmer racks
5. Provide continuous liaison with the General Contractor (GC) and other trades during demolition, construction, and coordinate delivery schedules and installation of equipment.
6. The EC shall provide coordination drawings for approval showing all elements of the items in this section in an AutoCAD® file Release 16 or more recent due prior to the installation of any materials on site. This drawing shall be executed using a cross-reference of the appropriate areas of the building as a background supplied by the Architect. Minimum drawings shall include plan and section of pertinent areas noting panels, conduit size, elbows, bends and wiring devices. All elements of this drawing shall be on no more than three layers all prefixed with “-ELEC”. All items shall be drawn full size with “color by layer”. Hard (paper) and soft (digital) copies of this file shall be requested and used by the Architect and Theatre Consultant.
7. Materials shall be as specified under Division 26 00 10
8. This specification shall be considered as an outline form and other appurtenances that may be required for the efficient and safe operation of the dimming and control systems specified in this section shall be furnished by the EC, the same as if specified herein.
9. All work shall be manufactured and installed in accordance with the latest editions of applicable publications and standards of the following organizations:
   a. National Electric Code (NEC) and all prevailing local regulations
   b. Underwriter's Laboratories, Inc. (UL)
   c. National Electrical MFRS. Association (NEMA)
   d. Federal Communication Commission (FCC)
   e. United States Institute of Theater Technology (USITT)
10. The EC shall provide all mounting and mechanical installations and shall verify all mounting conditions.
11. Any materials installed which shall not present an orderly and reasonably neat or workmanlike appearance shall be removed and replaced when so directed by the at the EC's expense.

12. Any quantities, measurements or dimensions listed or shown are for the convenience of the EC in the preparation of his estimate, but will not relieve the EC of his responsibility for the determination of the exact measurements required for a complete job.

C. System Outline

1. The theatrical dimming system consists of wiring devices, both low and line voltage, theatrical dimmer rack, lighting control rack and remote consoles.
2. The DMX 512 control signal shall be generated by various consoles and devices, and shall be connected to the dimmer racks via conduit runs and appropriate low voltage cables specified herein. Access to the DMX network shall be provided via the Lighting Control Rack (LCR).
3. All equipment shall be the coordinated system integrated by the SI in coordination with the EC.
4. The specified dimming and control components are called out in terms of products as manufactured by Electronic Theater Controls, Electronics Diversified, Union Connector and others. This equipment is fully described in the Contract Documents. Complete technical data is also available from the manufacturers. All catalog numbers are those shown on Manufacturer's data sheets and drawings unless otherwise noted.
5. The dimming equipment, wiring devices and control devices shall be set into place and installed by the EC. It shall be the EC's responsibility to run all conduit and wiring for line and low voltage circuits, and make only line voltage terminations at the wiring devices.
6. When the EC is finished, a fully working and tested system will be turned over to the Owner. If mention has been omitted of any items of the work or materials usually furnished for, or necessary to the completion of the electrical work or if there are conflicting points in the specifications and/or drawings, the Architect's attention should be called to such items in sufficient time for a formal addendum to be issued.

D. System Commissioning

1. At no time shall the equipment furnished be energized prior to the SI authorized commissioning
2. The EC shall notify the SI within at least two weeks time for system commissioning.
3. The EC shall confirm in writing that the following conditions have been met prior to scheduling system commissioning.
   a. Arrangements shall be made for access to all equipment. Scaffolding, lifts or any other OSHA approved method shall be acceptable.
   b. All dimmer racks shall be installed and wired.
   c. All control wire shall be installed.
   d. All distribution equipment shall be completely installed.
   e. Continuity checks for the entire system shall have been performed and failures remedied.
4. At the time of commissioning the EC shall provide a representative who is has full working knowledge of the system, device placement and job conditions.

This representative shall be on-site throughout the commissioning process and shall coordinate with, and aid, the SI to expeditiously commission the system.

E. Inspection and Testing

1. Field Check-out & Final Approvals
   a. Furnish all equipment and instruments necessary for testing the complete wiring system during the progress of the work as well as after installation. Tests shall be demonstrated to the satisfaction of the Owner. Test the following:
      1) All circuits are continuous and free from short circuits
      2) All circuits are free from unspecified grounds
      3) All circuits are properly connected in accordance with the applicable wiring diagram
      4) Voltage drop at each end of the circuit with a 2000 watt load
      5) All low voltage circuits complying to industry standards
2. Final check of House, Work and Stage control system
   a. All work under this contract, upon completion of installation, shall be demonstrated, tested and adjusted in coordination with the SI and the EC. No part of the system shall be energized before being so checked and the installation approved.
   b. Make all necessary arrangements for all parties concerned to be present, by scheduling such inspection in a manner acceptable to the Theatre Consultant and give a minimum of 14 days notice.
   c. Furnish all labor, materials and instruments necessary for this inspection and testing.
3. Final site visitation by the Theatre Consultant
   a. When the work on the entire structure has been completed and is ready for final review, a visit will be made by the Theatre Consultant or his duly authorized representative, at which time the SI shall demonstrate that the requirements of the contract as it applies to his work have been carried out and that the system has been adjusted and operates in accordance therewith.
   b. Any defects shall be repaired at once and the tests re-conducted.
4. DMX Emergency Bypass Controller:
   a. Provide ETC model DEBC or equal
      1) Functional requirements:
         a) Overrides a single universe of ANSI E1.11–2008, USITT DMX512-A control signals from “Normal” to “Bypass” when a trigger signal is
         b) detected via a contact closure
         c) Sends DMX signal to a single output or up to six (6) optically-isolated outputs
         d) Polls the bypass trigger input after a power loss to ensure proper state at startup
         e) Provides unprocessed DMX pass-through in normal operation mode

f) Supports a single configurable DMX preset (snapshot) of 512 channels for recall when control is bypassed
g) Recalls default or recorded preset immediately whenever the bypass input is triggered and power is present

2) Mechanical properties:
a) Enclosure constructed of 18-gauge, formed steel panels with a removable front cover finished in fine-textured powder-coat paint
b) Designed for wall-mount applications
c) Internal voltage barrier provides separate wiring compartments for power and control wiring
d) Bi-color LED status indicator visible from the exterior of the enclosure.
- Green: power is present and controller is functioning in normal state
- Red: controller is functioning in bypass state
e) Recessed test button to manually trigger bypass state is user-accessible without removing covers
f) Internally-accessible DIP switches for configuration of:
- DMX record mode
- Contact input type
- Wait-time to restore incoming DMX (bypass trigger removed)
g) Internally accessible button for DMX record (snapshot) of bypass preset with an indicator LED for record action

3) Electrical:
a) Supports 100 V to 277 V input power, 50/60 Hz, 0.2 A maximum current
b) Power input terminals accept two 24–10 AWG solid or stranded wires
c) Grounding lug accepts 14–2 AWG solid or stranded ground wire
d) Bypass contact input supports two 30–12 AWG low-voltage wires with two modes:
- Configurable dry contact input supports maintained normally open (NO) or normally closed (NC) triggering
- Wet contact input for interface with external systems, including fire alarms
e) Supports one universe (512 channels) of DMX data compliant with ANSI E1.11–2008, USITT DMX512-A
- DMX output and DMX input terminals for Belden 9729 cable or equivalent
f) Non-volatile memory storage for a single recorded scene of 512 channels
g) DEBC-1 passes RDM data in normal mode
h) DEBC-6 passes RDM data through DMX Thru port in normal mode

5. DMX relay controller
a. Provide ETC Unison Foundry relay controller model # UFR2-LV or equal

1) FUNCTIONAL
   a) Control for individual fxtures, zone power
   b) Supports USITT DMX512-A (ANSI E1.11)
   c) Supports RDM (ANSI E1.20)
2) MECHANICAL
   a) Constructed of injection-molded ABS plastic
   b) Button interface and LED indicators for confguration
   c) Half-inch conduit knockout mounted
   d) Mains-voltage wiring exits through knockout mount
   e) 0-10V dimming control wiring exits through knockout mount
   f) DMX wiring connects to side of controller
   g) Mains power input connections:
      -12 AWG Hot - Black
      -14 AWG Neutral - White
   h) Relay output connections:
      - Zone 1, 12 AWG - Red
      - Zone 2, 12 AWG - Red/White
   i) Optional mounting plate available for applications that require low-voltage wiring to be in conduit
3) ELECTRICAL
   a) 120V-277V, 50/60Hz power input
   b) Normally Open (NO) 20-amp fully-rated relay
   c) Supports lighting and plug loads
   d) UL and cUL LISTED
      - Conforms to UL 508 and UL 2043
4) DMX INPUT PORT
   a) Optically-isolated from Controller electronics
   b) Withstands fault voltages of up to 250VAC
   c) Integrated DMX/RDM termination
5) CONFIGURATION
   a) Remote confguration available via RDM controllers including:
      - ETC DMX/RDM gateway networked to a device running ETC Net3 Concert software
      - ETC control console with RDM functionality
      - 3rd party confguration and control products
   b) Manual confguration of the starting DMX address on the controller

2.10 AUTOMATED LIGHTING CONTROL SYSTEM

A. General: Summary
   1. Section Includes:
      a. Addressable Networked Light Management System.

B. References
   1. National Fire Protection Association (NFPA)

2. cULus Listing/Certification
   a. Certified as Energy Management Equipment (UL 916)
   b. Certified as Emergency Lighting Equipment (UL 924)
   c. Meet Heat and Smoke Release for Air-Handling Spaces (UL 2043)
3. Federal Communications Commission (FCC) / Industry Canada (IC)
4. California Energy Commission (CEC)
5. Local Building Codes

C. System Description
1. Lighting Control System includes computer-based software that provides control, configuration, monitoring and reports. System includes the following components:
   a. Central Control Unit
   b. System Server
   c. 0-10V Dimming, Fixed Output Ballasts or 0-10V LED Drivers
   d. System Field Devices (Input and Output Modules)
   e. Network switches
   f. Lighting Control System Software
   g. Lighting Controllers
   h. Communication Wire
   i. Wireless site lighting control modules (#WSLC), one per pole mounted fixture
   j. Wireless Manager for site lighting
   k. Wireless Control modules #WCM
   l. Occupancy sensors
   m. Photo sensors
   n. Lighting control panels
   o. Interface to audio visual equipment
   p. Interface to BACnet
   q. Interface to Tridium Niagara
   r. Incandescent low-voltage dimming modules
   s. Tunable white light programming
   t. Coordination of final lighting programming
   u. Owner training

D. Submittals
1. Bill of Materials: Complete list of all parts needed to fully install selected system components.
2. Product Data: For each type of product indicated.
3. Shop and Wiring Drawings: Submit shop drawings detailing control system, as supplied, including one-line diagrams, wire counts, coverage patterns,

interconnection diagrams showing field-installed wiring and physical dimensions of each item.

4. Coordination Drawings: Submit evidence that lighting controls are compatible with connected monitoring and control devices and systems specified in other Sections.
   a. Show interconnecting signal and control wiring and interfacing devices that prove compatibility of inputs and outputs.
   b. For networked controls, list network protocols and provide statements from manufacturers that input and output devices meet interoperability requirements of the network protocol.
5. Software Operational Documentation:
   a. Software operating and upgrade manuals.
   b. Program Software Backup: On compact disc or DVD, complete with data files.
   c. Prinout of software application and graphic screens, or upon request, a live demonstration of Control, Configure and Analyze functionality or a video demonstrating above stated system capabilities.
6. Installation Instructions: Manufacturer's installation instructions.
7. Operation and Maintenance Data: For each type of product to include in emergency, operation, and maintenance manuals.
8. Warranty: Copy of applicable warranty.

E. Quality Assurance

1. Installer Qualifications: Installer shall be one who is experienced in performing the work of this section, and who has specialized in installation of work similar to that required for this project.
2. Manufacturer Requirements: The manufacturer shall have a minimum of 10 years experience manufacturing networked lighting control systems and shall provide 24/7 telephone support by qualified technicians.
3. Contractor shall ensure that lighting system control devices and assemblies are fully compatible and can be integrated into a system that operates as described in the lighting control notes on drawings and as described within this specification. Any incompatibilities between devices, assemblies, and system controllers shall be resolved between the contractor and the system provider to ensure proper system operation and maintainability.
4. Performance Requirements: provide all system components that have been manufactured, assembled, and installed to maintain performance criteria stated by manufacturer without defects, damage, or failure.
5. Performance Testing Requirements
   a. Manufacturer shall 100 percent test all equipment prior to shipment. Sample testing is not acceptable.
6. Code Requirements
   a. System Control Unit and System Field Devices shall be cULus listed and certified.
   b. All system components shall be FCC /IC compliant.

c. All system components shall be installed in compliance with National Electrical Codes and Canadian Electrical Code.

d. Building Codes: All units shall be installed in compliance with applicable, local building codes.

7. ISO Certification: System components shall be manufactured at ISO-9000 certified plants.

F. COORDINATION

1. Coordinate lighting control components to form an integrated interconnection of compatible components.

a. Match components and interconnections for optimum performance of lighting control functions.

b. Display graphics showing building areas controlled; include the status of lighting controls in each area.

G. Delivery, Storage & Handling

1. Ordering: Comply with manufacturer's ordering instructions and lead-time requirements to avoid construction delays.

2. Delivery: Deliver materials in manufacturer's original, unopened, undamaged packaging with intact identification labels.

3. Storage and Protection: Store materials away from exposure to harmful weather conditions and at temperature and humidity conditions recommended by manufacturer.

H. Warranty

1. On-going system expansion, service and support shall be available from multiple factory certified vendors. Recommended service agreements shall be submitted at the time of bid complete with manufacturers suggested inventory and pricing for system parts and technical support labor.

2. Special Warranty: Manufacturer's standard form in which manufacturer agrees to repair or replace components of lighting controls that fail in materials or workmanship within specified warranty period.

3. Manufacturer's Warranty: All equipment shall be warranted free of defects in materials and workmanship.

a. Warranty Period: All system hardware components shall have full warranty (non-prorated) for at least four years and all software components shall carry a warranty of 90 days from date of installation.

b. Owner Rights: Manufacturer's warranty is in addition to, not a limitation of, other rights the Owner may have under contract documents, or warranties of third party component manufacturers.

I. Basis of Design Products

1. Controls: ENCELIUM Energy Management System by OSRAM SYLVANIA

2. Sensors: ENCELIUM Sensors by OSRAM SYLVANIA & Hubbell Building Automation, Inc.

J. Acceptable Alternate Manufacturers

1. Controls: Lutron, N-light, Philips, or equal.

2. Sensors: Lutron, Sensor Switch, Watt Stopper, Leviton, Cooper or equal.

K. System Performance Requirements

1. This specification is intended to fully describe all of the design, engineering, programming, hardware, software, ancillary devices and associated technical services required to provide a building-wide networked lighting control system. This system is specified to perform scheduled and automated lighting control sequences.
2. The lighting control "system" shall include a fully distributed WAN/LAN network of global controller/routers, individually addressable System Field Devices, sensors, switches, relays and other ancillary devices required for a complete and operable system. The system WAN/LAN shall be commissioned by ENCELIUM personnel or other ENCELIUM certified commissioning contractors.
3. The basis of system design shall utilize non-propriety industry standard 0-10V dimming or fixed output ballasts and/or 0-10V LED drivers, occupancy sensors, and daylight sensors.
4. On-going system expansion, service and support shall be available from multiple factory certified vendors. Recommended service agreements may be submitted at the time of bid complete with manufacturers suggested inventory and pricing for system parts and technical support labor.
5. Lighting Control Software: The system shall offer two separate levels of lighting control: one personal lighting control for the average building occupant to control and adjust basic lighting functions in their workspace, and two central lighting control for the facility lighting administrator to perform energy management, configuration maintenance, monitoring operations, and providing support to building occupants.
   a. Native central control software shall be utilized for energy reporting status and complete programming without the need for any third party hardware or software. Systems that require any third party linked software or graphics shall be unacceptable.
   b. Software shall provide information on general system settings via mouse click on a floor plan. Left clicking over a device on the graphical software interface shall show a description of the selected device/function attribute.
6. Central Lighting Control:
   a. Shall provide an Interactive, Web-based graphical user interface (GUI) showing floor plans and lighting layouts that are native to the lighting control software. The only means required to program and operate the lighting control system shall be programmed and operated from a user interface that is based on a plan view graphical screen on the user's computer or the lighting control system's main computer. Shall include the navigational features listed below to allow for user's orientation within the controlled space, geographic heading and/or landmarks:
      1) Interactive
      2) Vector based
      3) Zoom
      4) Rotate
      5) Pan

6) Tilt

b. Shall allow building operator to navigate through an entire facility both in two- dimensional and three-dimensional multi-floor view, allowing for fast and easy navigation.

c. Three-dimensional view shall exclude walls and other structural features to avoid shadowing and cluttering of the plan view.

d. All programming, assignments of lighting loads to control strategies, lighting status and lighting energy reporting shall be native to the software and executed from this GUI. Editing shall be available from this GUI in a drag and drop format or from drop down menus without the need for any third party software. Systems that utilize or require third party linked graphics are unacceptable. The GUI shall continuously indicate the status of each connected device on the system and a warning indicator on the software if a device goes offline. Systems requiring spreadsheet editing for programming and that don't offer real time feedback are not acceptable.

e. Software settings and properties shall be selectable per individual device, room based, floor based or global building based.

1) Lighting Control Software interface shall provide current status and enable configuration of all system zones including selected individual fixture availability, current light level, maximum light level, on/off status, occupancy status, and emergency mode (response to an emergency signal) status.

f. Shall have the ability to display various lighting system parameters such as Lighting status (ON/OFF); Lighting levels, Load shedding status, or Lighting energy consumption, Occupancy status in a colorized gradient ("weather" map) type of graphical representation.

g. Energy Analysis data shall be exportable in a CSV or similar format.

h. Shall allow import of native AutoCAD files.

7. Reports: Reporting feature shall be native to the lighting control software and capable of reporting the following parameters for each device and zone individually without requiring any third party hardware and software:

a. Energy consumption broken down by energy management strategy.

b. Energy demand broken down by energy management strategy.

c. Occupancy data by zone.

d. Building wide occupancy status

e. Lighting energy consumption in a color gradient ("weather map" type) view

f. Energy performance reports shall be printable in a printer friendly format and downloadable for use in spreadsheet applications.

8. Personal Lighting Controls: The Personal Control Software interface shall provide current status and enable each user with the ability to dim and brighten lights, and turn them on and off by individual fixture or zone. The Software shall offer user configurable light scenes, which may be programmed and then selected via the Software. Personal lighting control shall be available in open/private office environments.
9. Daylight Harvesting (Light Regulation Averaging): In a photo sensor-equipped system, the Central Controller Unit shall rationalize changes to light levels when ambient (natural) light is available and shall maintain a steady light level when subjected to fluctuating ambient conditions where dimming ballasts and/or drivers exist. Areas equipped with fixed output ballasts and/or drivers shall energize when natural light falls below foot-candle levels specified. System shall utilize light level inputs from common and/or remote sensor locations to minimize the number of photo sensors required. The System shall operate with multiple users in harmony and not react adversely to manual override inputs.
10. Time Clock Scheduling: The system shall be programmable for scheduling lights on or off via the Lighting Control Software interface.
    a. Support for BACnet Time Schedule Object: This allows the export of Lighting Control time schedules to BACnet devices and vice versa in the event of Lighting Control System's integration with BACnet.
    b. Override: Manual adjustments via lighting controllers or personal control software shall temporarily override off status imposed by time clock schedule.
    c. Response to Power Failure: In the event of a power failure, the time clock shall execute schedules that would still be in progress had they begun during the power outage.
    d. Flick Warning: Prior to a scheduled lights-off event or expiry of a temporary override, the system shall provide two short light level drops as a warning to the affected occupants. Flick warning time shall have the ability to be programmed via software between one and five minutes.
11. Load Shed Mode: An automatic load shedding mode shall be available where, when activated through the system, the control unit will reduce its output to a programmable maximum electrical demand load. The system shall not shed more load than required and load shedding priority shall be centrally configurable by control zone or by common uses (i.e., all hallways can be treated as one load shed group), with subsequent load shed priority groupings being utilized until the required defined load has been shed, for either a defined period, or until the demand response input has been removed. Systems that simply select a "load shed scene" whereby there is no guarantee that the defined required load will actually be shed are not acceptable.
12. Emergency Mode: There shall be a mode, when activated through the system, that will immediately adjust lights to full light output and retain that level until the mode is deactivated in the event of an emergency. This setting shall override all other inputs. The system shall interface with the building of life safety transfer switch, fire alarm control panel, and security system control panel.

13. Addressing: All ballasts and/or drivers shall be centrally addressable, on a per fixture or multiple fixtures/zone basis, through the Central Control Software. The basis of design shall utilize industry standard 0-10V Dimming, Fixed Output Ballasts and/or 0-10V LED Drivers connected to an Output Module. To simplify ongoing maintenance, the system shall not require manual recording of addresses for the purpose of commissioning or reconfiguration.
14. Programmable Task Tuning: Maximum light level programmability shall be available by individual fixture.
15. Unoccupied State: The system shall provide two states when occupancy status is vacant as per an occupancy sensor: lights turn off or lights adjust to configurable (dimmed) light level.
16. Occupied State: The system shall be capable of creating “comfort” or “support” zones to ensure that occupants are not isolated by turning off lights in adjacent areas for occupant comfort and safety, such as a hallway path to exit the premises.
17. The Automated Lighting Control System (ALCS) BACnet Interface shall share the following information with the BACnet enabled Building Automation System and other systems listed below:

Property	BACnet Type	Description
Lighting Load	Analog Value*	Reports the total lighting load of the ALS, defined in Watts
Light Zone State	Binary Value*	State of the defined lighting zone - ON or OFF
Light Zone Dimming	Analog Value*	Light output level of the defined lighting zone, from 100 percent (maximum light output) to 0 percent (minimum light output)
Emergency System State	Binary Input	State of the emergency alarm system: alarm activated or alarm not activated
Fire Alarm State	Binary Input	State of the fire alarm system: alarm activated or alarm not activated
Security System State	Binary Input	State of security alarm system:

		alarm activated or alarm not activated
Occupancy State	Binary Output	State of the defined occupancy sensor – occupancy detected or not detected
Sheddable Load	Analog Output	Reports the total lighting load available for load reduction according to ALS, defined in Watts
Shed Status	Analog Output	Reports the total current load reduction achieved according to ALS defined prioritization, defined in Watts
Shed Request	Analog Input	Requested total amount of load reduction, defined in Watts or as a percentage of sheddable load
Sheddable Load (Group)	Analog Output	(As above, unprioritized for the selected group)
Shed Status (Group)	Analog Output	(As above, unprioritized for the selected group)
Shed Request (Group)	Analog Input	(As above, unprioritized for the selected group)

18. LAN Operations: System shall be capable of operating independent of building's existing network infrastructure if desired and shall not rely on tenant supplied PCs for operation. Network infrastructure shall only be utilized for Personal Control Software.
19. Firewall Security: Firewall technology shall be utilized to separate tenants from the lighting control network.
20. Lamp Burn In: The system software shall not permitt dimming of new lamps prior to completion of lamp manufacturer 100 hour recommended accumulated operation at full brightness.
21. Re-configurability: The assignment of individual fixtures to zones shall be centrally configurable by Central Control Software such that physical rewiring

will not be necessary when workspace reconfiguration or re-zoning is performed. Removal of covers, faceplates, and ceiling tiles. shall not be required.

22. Automatic Control Parameters: Occupancy sensor time delays shall be configurable through software. Light level sensor parameters shall be configurable through software.
23. Automatic Time Adjustment: System shall automatically adjust for leap year and daylight savings time and shall provide weekly routine and annual holiday scheduling.
24. Contact closure input: System shall be capable of receiving a momentary and sustained contact closure input from third party sources to control lighting zones.
25. The light management system shall interface digitally with the building automation system via BACnet/IP and Tridium Niagara AX interface. The lighting control system shall communicate the status of output devices (lighting loads) as well as input devices (dry contacts, switches, occupancy sensors, vacancy sensors, and photocells) over this connection allowing the building automation system to utilize lighting control system input devices such as occupancy sensors to determine if mechanical control zones are occupied for climate adjustments.
26. The system software shall provide a web based energy dashboard to show real time energy savings data and carbon footprint reductions.
27. Migration Plan to Control LED Fixtures
    a. System shall be capable of migrating from the control of 0-10V Ballasts to 0-10V LED Drivers utilizing the same Output Modules without the need to change control hardware.

L. Lighting Controllers

1. Description: The system shall include separate lighting controllers for each of the listed functionalities and at minimum meet listed electromagnetic, mechanical, electrical and data specifications:
    a. Software configurable lighting controller that provides on/off switching and dimming control for up to three lighting zones/scenes per controller or more with allowable multi-gang configurations. Status is indicated by an LED display to indicate function, scene or zone. Allows manual override of the time schedule.
    b. Manual dimming and/or switching lighting controller that provides local on/off and dimming control over at least three lighting zones. Allows manual dimming of light levels and override of the time schedule.
    c. Scenes in the central control software shall be synchronized with the buttons on the lighting controller.
    d. Lighting controllers shall fit in a standard Decorator style wall plate and may be ganged together.

2. General
   a. Addressing: All controllers shall be individually addressable & reconfigurable via Central Control Software.
   b. Shall provide local on/off or dimming control over lighting zones
   c. Shall utilizing a standard single-gang or multi-gang form factor
   d. Shall have a terminal block that connects to lighting system with 18 AWG, polarity independent , CMP rated and low voltage wire
   e. Shall be manufactured with push-in wire receptacles
   f. LED's: All controllers shall feature LED's to indicate light on and light off status.
   g. Color: All controllers shall meet NEMA WD1 color specifications.
   h. Style: All controllers shall feature Decorator styling wall plates.
   i. Lighting scenes reconfigure automatically based on scene changes from personal control software.
   j. Industrial lighting controllers shall also be available for damp location applications.
   k. Shall comply or exceed the following electromagnetic requirements:
      1) EN 61000-4-2
      2) EN 61000-4-4
      3) EN 61000-4-5
      4) FCC Part 15/ICES-003
3. Mechanical Specifications:
   a. Dimensions: Shall meet NEMA WD-6 spec.
   b. Maximum Operating Ambient Temperature: 60 deg C.
   c. Mounts in standard size wall box suitable for multi gang installation or alternative of Low Voltage mounting bracket.
   d. Suitable for use with Decorator style wall plates.
4. Electrical Specifications:
   a. Class 2 Low Voltage device.
   b. Power through interconnected 18 AWG cable with 2-pin header
5. Data Specifications:
   a. Class 2 communication bus that uses prefabricated 18 AWG cable.

M. Wireless Site Lighting Control Module
1. The wireless site lighting control module shall extend the networked light management system's controls capability to a building's surroundings or site such as parking lots and short pathways, via a wireless mesh network based on Zigbee standards. The wireless site lighting control installs on top of a luminaire via an ANSI C136.41 compliance 7-pin twist-lock connector.
2. The wireless site lighting control shall be individually addressable via the wireless system management and can switch luminaires ON/OFF via an integrated high current relay, dim luminaires equipped with 0-10V dimming drivers or ballasts and has an input for an external occupancy sensor.
3. Specifications:

a. Power:
   1) Operating voltage 120V-347V
   2) Power consumption as no load: <1.0W
   3) Surge protection: 6kV, 6kA
b. Load Rating: 10A: Electronic driver/ballast, magnetic ballast, resistive load
c. Interface:
   1) Single dimming output that is 0-10V (IEC 60929 Annex E), DA-LI or DEXAL compatible.
   2) Sink/source 10 mA
   3) Senor Input: Maximum 20 mA; minimum 18; nominal 19.5V
d. Software:
   1) Individual addressability
   2) Time schedule based control
   3) Daylight based control
   4) Astronomical schedule based control
   5) Occupancy based control
e. Power Metering
   1) V, I, P Energy
      a) Accuracy is <2% from 0.5A to 10A load
      b) Accuracy is <5% below 0.5A
f. Environmental
   1) Operational Temp: -40 deg. F to +150 deg. F (-40 deg. C to +65 deg. C)
   2) Relative humidity: 0% to 95%
   3) Ingress protection: IP66
g. Communication
   1) Wireless protocol: ZigBee
   2) Radio Frequency: 2.4 GHz
   3) Transmit power: 20 dBm
   4) Up to 1,000 ft. Line of sight between modules
h. Physical
   1) Base diameter: 3.31 in. (84 mm); height: 2.61 in. (66.4 mm)
   2) Weight: 0.44lbs (200g)
   3) Color: black
   4) Housing: UV stabilized PC
i. Regulatory
   1) UL/916/773 cULus listed
   2) Meets ASHRAE Standard 90.1 and CEC Title 24 requirements
   3) FCC Part 15/ICES-003

N. Wireless Manager

1. The wireless manager shall collect, process and distribute lighting control information to control modules over a wireless mesh network. Each wireless manager typical can control up to 100 nodes.
2. The wireless manager is the central intelligence point in the system for the wireless devices. It collects signal information from control modules, it then determines appropriate brightness levels or ON/OFF status for each fixture and zone.
3. Specifications:
   a. Wireless Range: 100 ft. line of sign, 50 ft through standard walls
   b. Wireless manager Network Port – Ethernet 1-/100BaseTx Cat. 5 RJ45 port
   c. Dual PoE ports for daisy chain of up to 3 wireless managers
   d. Status LED on front of unit
   e. Configuration stored in non-volatile flash memory
   f. Weights: 115g (4.06oz) wireless manager 40g (1.41 ox) ceiling mounted kit
   g. Operating temperature range: 32 deg. F to 104 deg. F (0 deg. C to 40 deg. C)
   h. AES 128-bit encryption for wireless communication
   i. Dimensions: 2.81 in. W x 4.631 in. H x 0.78 D (71.37mm W x 117.6mm H x 19.81mm D)
   j. Includes Polaris 3D software
   k. cULus Listed
      1) Energy Management Equipment (UL 916)
   l. Complies with the following electromagnetic requirements:
      1) EN 61000-4-2
      2) EN 610000-4-4
      3) EN 610000-4-5
   m. FCC Part 15/ICES-003

O. System Field Devices (Input and Output Modules)

1. General: Input Modules provide a common interface to low voltage occupancy sensors and photo sensors while Output Modules provide a common interface to 0-10V Dimming, Fixed Output Ballasts and/or 0-10V LED Drivers and analog dimming devices such as incandescent low-voltage dimming modules. These modules automatically self-address and detect the type of devices they are connected to (i.e., photo sensor, occupancy sensor, 0-10V ballast, 0-10V LED drivers or incandescent dimming module) and establish two-way communication between the system Control Unit (CU) and themselves. These individually addressable modules enable each lighting component to be independently controlled and configured to best meet the needs of the facility.
   a. Addressing: System Field Devices shall be individually addressable via Central Control Software.

b. System shall automatically address individual nodes during system commissioning thus eliminating the need to pre-address devices or record serial numbers during installation.

c. Modules shall at minimum meet the listed general, mechanical and environmental specifications set at below.

2. Provide Wireless site lighting control (WSLC) module for all site lighting unless specifically noted on the electrical site plan.

3. Air Gap Off

   a. Definition: Air Gap Off shall refer to the physical disconnection of AC power to the ballast or driver when “OFF” is selected either automatically or manually, thus ensuring maximum energy savings by eliminating off-state phantom power losses as well as ensuring that no potentially lethal high-voltage is present at the ballast or driver when the lights appear to be off (for life-safety reasons).

   b. Provisions: Provide an air-gap off relay for each control zone in the system. Where each fixture is to be controlled (dimmed and/or switched) independently, provide one relay per fixture. Where multiple fixtures are to be controlled (dimmed and/or switched), provide one relay per control zone, sized to handle both the inrush current as well as the maximum connected load, at the specified voltage.

4. General Specifications:

   a. Shall supply 12VDC (up to 24VDC) to sensors.

   b. Shall have 2 ports that accept 18 AWG, pre-fabricated, polarity independent quick connecting Class 2 communication bus that supplies 24 VDC.

   c. Two models, one rated for regular indoor use and other for use in damp locations such as basements, cold storage areas. shall be available.

   d. Memory: Retains all system settings in non-volatile memory.

5. Mechanical Specifications:

   a. Wiring: The System Field Device shall not require wiring connections to the System apart from pre-terminated, quick connecting 18 AWG, polarity independent quick connecting Class 2 communication bus.

6. Environmental Specifications:

   a. Operating Temperature Range: -40 deg C to +55 deg C.

   b. Humidity: 0 percent to 100 percent RH condensing rated for damp locations.

      0 percent to 95 percent RH non-condensing rated for indoor locations.

P. Energy Control Unit

1. General: The Energy Control Unit (ECU) is a rack or wall mounted lighting control device that collects, processes and distributes lighting control information to System Field Devices and lighting controllers over a Class 2 communication bus. Each ECU has multiple Class 2 communication channels and can control a large quantity of nodes (sensors, lighting controllers, 0-10V Dimming, Fixed Output Ballasts and 0-10V LED Drivers.) per channel, per the manufacturers recommended maximum. The ECU is the central intelligence point for the area that it controls, collecting signal information from sensors, lighting controllers and personal control software and determining appropriate brightness levels or on/off status for each fixture or zone. Each ECU has an Ethernet connection for communication with a facility's or tenant's Local Area Network (LAN) to enable desktop personal control.
   a. Shall interconnect with other ECUs and System Server Unit (SSU) using standard Ethernet connection that employs TCP/IP protocol.
   b. Control units shall at minimum meet the mechanical, electrical, data, electromagnetic and environmental specifications listed below.
2. Mechanical Specifications:
   a. Shall mount in a standard 1 inch rack (1U width), or alternatively where no rack is shown, via an individual wall mount.
3. Electrical Specifications:
   a. Power Supply: 120V/60Hz/200W. Provide dedicated 120V receptacle fed from a dedicated normal power circuit; do not connect to a UPS or normal/emergency power source.
4. Data Specifications:
   a. Shall have 8 ports that accept 18 AWG, pre-fabricated, polarity independent quick connecting Class 2 communication bus that supplies 24 VDC
   b. Each ECU channel shall support up to 100 nodes or 800 nodes in total.
   c. Each ECU shall have two Ethernet 10/100Base - Tx Cat 5 RJ45 ports that employs TCP/IP protocol:
      1) Lighting Control Network
      2) Tenant LAN Access Point
   d. Shall have a status LED on front of unit.
   e. Shall have configuration stored in non-volatile flash memory.
5. Shall comply or exceed the following electromagnetic requirements:
   a. EN 61000-4-2
   b. EN 61000-4-4
   c. EN 61000-4-5
   d. FCC Part 15/ICES-003
6. Environmental Specifications:
   a. Operating Temperature Range: -20 deg C to +40 deg C.
   b. Humidity: 0 percent to 95 percent RH non-condensing.

Q. Network Switch

1. Provide all required network switches. Network switches are proprietary
   a. IDF rooms shall utilize HP/Aruba 2920 , model# J9729A
   b. MDF room shall utilize HP/Aruba 5406R model# JL003A with 2 -1100 Watt power supplies (Model J9829A)

R. System Server Unit

1. General: System Server Unit (SSU) shall host the lighting control system database for all the lighting control devices. Server shall have the ability to:
   a. Remotely access a system in order to change system settings or configuration;
   b. Analyze system performance or energy data or generate system report;
   c. Record energy consumption with average sampling every 5 minutes for unlimited duration;
   d. Host the web interface required for the web enabled Personal Control Software or web based Central Control Software;
   e. Optionally can reside on a client server (virtual server) thus eliminating the need for dedicated physical hardware if desired;
   f. Interconnect with ECUs over standard Ethernet connection that employs TCP/IP protocol;
2. Hardware based servers shall at minimum meet the specifications listed below:
   a. Specifications:
      1) Mechanical Specifications:
         a) Shall mount in a standard 19 inch rack (1U width), or alternatively where no rack is shown, via an individual wall mount.
   b. Electrical Specifications:
      1) Power Supply: 120V/60Hz/200W. Provide dedicated 120V receptacle fed from a dedicated normal power circuit.
   c. Regulatory:
      1) FCC (US only) Class A.
      2) DOC (Canada) Class A.
      3) UL 60950.
      4) CAN/CSA-C22.2 No. 60950.

S. Communication Wire

1. Wiring: 18 AWG, pre-fabricated, polarity independent quick connecting wiring. The system shall have the capability to use both Class 1 and Class 2 wiring. The maximum connected length of wiring shall be 2500 ft. per channel.

2. Field Bus: Integrates peripheral devices such as 0-10V ballasts and/or 0-10V LED drivers, occupancy sensors, photo sensors, relay-based controls, power packs and low voltage wall controls into a complete, networked programmable lighting control system. Provides power to photo sensors, PIR occupancy sensors and dual-technology occupancy sensors. Devices may be connected randomly on the network and special termination of each network channel is not required.
3. Field bus shall at minimum meet the specifications listed below:
   a. Specifications:
      1) Class 2 communication bus.
      2) Prefabricated one ft., five ft., ten ft., 15 ft., 20 ft., 25 ft. and 50 ft. lengths.
      3) Daisy chain topology
      4) Prefabricated with 2-wire connectors.
      5) Flame rated jacket for plenum use NFPA 262 (UL: FT6, CSA: CMP).
      6) Power Supply: 12 VDC (up to 24 VDC) to sensors.

T. Conductors and Cables
1. Class 2 Control Cable: Multi-conductor cable with stranded-copper conductors not smaller than No. 18 AWG.

U. Lighting Control Panels
1. General
   a. Addressing: All lighting control panels shall be individually addressable via Central Control Software.
   b. Communication: All lighting control panels shall communicate via the same prefabricated, quick connecting low voltage wiring as all other devices.
   c. Wiring: Relay control panels shall be interconnected on the same field bus as all other system components.

V. Lighting Control System Software
1. Personal Control Software: Enables individuals in a building to control lighting levels in their workspace from their own desktop PC. User can control the light level of each fixture in their workspace or can control all of the fixtures together as a group. Preset lighting scenes may be stored, recalled and modified. This software shall have the capability of acting as a “virtual occupancy sensor” for the system by detecting keyboard or mouse activity on each PC for incremental occupancy status data.
   a. Technical Information:
      1) TCP/IP network traffic < 2kb/s.
2. Web based Personal Control Software: This feature allows individuals to control lighting levels in their workspace without the requirement for installation of software on client PCs. Individuals can access the interface through the web browser and perform individual fixture dimming control, on/off switching, modify and save preset lighting scenes.

3. Technical Information: Adobe Flash ® based user interface.
   a. System Requirements:
      1) Internet web browser with Flash® Player 8 or later.
      2) Internet/Intranet connection.
      3) SSU enabled and configured to host dynamic website.
      4) Network connection with access to a network-enabled CU.
4. Web based Central Control Software: Central control software application is used to commission, configure and manage the system. Every system parameter in a building (or campus of buildings) is configured for each individual user or space and baseline settings are established for each of the following (depending on the basis of design) system features:
   a. Daylight harvesting.
   b. Occupancy control.
   c. Smart time scheduling.
   d. Task tuning.
   e. Personal control.
   f. Load shedding.
      1) Software utilizes a web based interface that permits a user to easily navigate between zones, floors or different buildings and allows a user to zoom in or zoom out of specific areas of a building. Both 3-dimensional and 2-dimensional multi-floor views shall be available. System features such as creation of zone hierarchies, overlapping and support zone definitions, user access rights, timeout settings for occupancy sensors, calibration of light levels for daylight harvesting and the configuration of multiple time schedule profiles shall be available. A web based Graphical User Interface (GUI) application integral to the system will be used to develop a dynamic, real-time, point-and-click graphic of each floor plan with representation of all light fixtures, lighting controllers, sensors, and switches. A central system server will be provided to support system data base and enterprise control management.
5. System Requirements:
   a. Software must be able to run on a Windows Operating systems (Windows XP or newer) and also on Apple Mac Intel PCs (Mac OS 10.4 or newer).
   b. Must support all common browsers, i.e.,
      1) Internet Explorer 6.0 or later
      2) Mozilla Firefox 3.0 or later
      3) Safari
      4) Google Chrome
   c. Network connection with access to network-enabled CUs.
   d. Color gradient (“weather map” type) data view (see below for an example) shall be available to display the following criteria:
      1) Current energy consumption
      2) Current energy savings
      3) Current fixture brightness

4) Current fixture status
5) Current occupancy data
6) Current load shedding status
7) Other custom modes that may be specified elsewhere

W. Photo Sensor:
Photo sensors shall at minimum meet the specifications listed below:

1. General Specifications:
   a. Shall be Class 2, low voltage.
   b. Ambient light sensor designed to interface directly with the analog input of the Lighting Control System.
   c. Sensor shall supply an analog signal to the ALCS proportional to the light measured.
   d. Sensor output shall provide for zero or offset based signal.
   e. Sensor shall be capable of a fully adjustable response in the range between 0 and 10,000 foot candles with a +/- 1 percent accuracy at 70 deg F.
   f. Input: 10VDC.
   g. Minimum Output: 0 VDC.
   h. Maximum Output: 10 VDC.
   i. Sensor housing shall be flame retardant and meet UL 94 HB standards.
   j. Operating Temp: -10 deg C to 60 deg C.
   k. The sensitivity adjustments shall be at sensor body, and outside of the sensor's viewing angle.
   l. The sensor houding shall be flame retardant and meet UL 94HB standards
2. Interior:
   a. Indoor sensors shall have a Fresnel lens, with a 60 degree cone of response. The indoor sensor range shall be between 0 and 750 FC.
3. Exterior:
   a. Outdoor models shall have a hood over the aperture to shield the sensor from direct sunlight. The outdoor sensor circuitry shall be completely encased in an optically clear epoxy resin. Outdoor sensors shall mount to a standard threaded 1/2 in. conduit or fit a 1/2 in. knockout. The Outdoor sensor range shall be between 0 and 750 FC.
4. Atrium:
   a. The Atrium sensors shall have a translucent dome with a 180 degree field of view. Atrium sensor shall mount to a standard treaded 1/2 in. conduit or fit a 1/2 in. knockout. Atrium sensor range shall be from 2 to 2,500 FC.
5. Skylight:
   a. The Skylight sensors shall have a translucent dome with a 180 degree field of view. Skylight sensor shall mount to a standard treaded 1/2 in. conduit or fit a 1/2 in. Skylight sensor range shall e between 10 and 7,500 FC.

X. Occupancy Sensors

1. Environmental:

Operating Temperature Range: 0ºC to 40ºC

a. Relative Humidity: 0 percent to 95 percent non-condensing

b. Ceiling Mount Occupancy/Vacancy Sensors

1) Sensing mechanism:

2) Dual technology (ultrasonic / passive infrared):

3) Utilize multiple segmented lens, with internal grooves to eliminate dust and residue build-up.

4) Utilize an operating frequency of 32kHz or 40kHz that shall be crystal controlled to operate within plus or minus 0.005 percent tolerance.

5) Electrical: Rating: 12 VDC input voltage, up to 40 mA current draw.

6) Sensors shall turn off or reduce lighting automatically after reasonable time delay when a room or area is vacated by the last person to occupy the space

7) Sensor shall accommodate all conditions of space utilization and all irregular work hours and habits.

8) Sensors shall be UL listed.

9) Sensors shall be fully adaptive and adjust their sensitivity and timing to ensure optimal lighting control for any use of the space

10) Sensors shall have field adjustable controls for time delay and sensitivity to override any adaptive features. Sensor timeouts shall be configurable by System software.

11) Power failure memory:

12) Controls incorporate non-volatile memory. Should power be interrupted and subsequently restored, settings and learned parameters saved in protected memory shall not be lost.

13) Provide all necessary mounting hardware and instructions.

14) Sensors shall be Class 2 devices.

15) Indicate viewing directions on mounting bracket for all Ceiling mount sensors.

16) Provide customizable mask to block off unwanted viewing areas for all ceiling mounted sensors using infrared technology. Field prepare proper maskings for each space to eliminate unnecessary sensing beyond the space in which the sensor is located.

17) Provide an internal additional isolated relay with Normally Open, Normally Closed and Common outputs for use with HVAC control, Data Logging and other control options.

Y. Examination

1. Site Verification: Verify that wiring conditions, which have been previously installed under other sections or at a previous time, are acceptable for product installation in accordance with manufacturer's instructions.

2. Inspection: Inspect all material included in this contract prior to installation. Manufacturer shall be notified of unacceptable material prior to installation.

Z. Installation

1. The Electrical Sub-contractor, as part of the work of this section, shall coordinate, receive, mount, connect, and place into operation all equipment. The Electrical Sub-contractor shall furnish all conduit, wire, connectors, hardware, and other incidental items necessary for properly functioning lighting control as described herein and shown on the plans (including but not limited to System Field Devices, 0-10V dimming ballasts, fixed output ballasts, 0-10V LED drivers and communication wire). The Electrical Sub-contractor shall maintain performance criteria stated by manufacturer without defects, damage, or failure.
2. Power: The contractor shall test that all branch load circuits are operational before connecting loads to sensor system load terminals, and then de-energize all circuits before installation.
3. Related Product Installation: Refer to other sections listed in Related Sections for related products' installation.

AA. Sensor Installation

1. Adjust sensitivity to cover area installed
2. Set time delay on occupancy sensors that are connected to the lighting control system to the minimum. Time delays shall be controlled via Central Control Software.
3. Sensor shall be powered through Input Module. No external power packs shall be used for powering sensors.
4. Install occupancy sensors on vibration free stable surface.
5. Install atrium and skylight light sensor facing toward window or skylight.
6. Install interior light sensor in ceiling facing the floor.

BB. Wiring Installation

1. Wiring Method: Comply with Division 26 Section "Low-Voltage Electrical Power Conductors and Cables." Minimum conduit size shall be 3/4 inch.
2. Wiring within Enclosures: Comply with NEC & CEC. Separate power-limited and non power-limited conductors according to conductor manufacturer's written instructions.
3. Size conductors according to lighting control device manufacturer's written instructions, unless otherwise indicated.
4. Splices, Taps, and Terminations: Make connections only on numbered terminal strips in junction, pull, and outlet boxes; terminal cabinets; and equipment enclosures.

CC. Software Installation

1. Install and program software with initial settings of adjustable values. Make backup copies of software and user-supplied values. Provide current site licenses for software.

DD. Field Quality Control

1. Manufacturer's Field Service: Engage a factory-authorized service representative to test and inspect components, assemblies, and equipment installations, including connections.
2. Perform the following field tests and inspections with the assistance of a factory-authorized service representative:
   a. Operational Test: After installing lighting controllers and sensors, and after electrical circuitry has been energized, start units to confirm proper unit operation.
   b. Test and adjust controls and safeties. Replace damaged and malfunctioning controls and equipment.
3. Lighting control devices will be considered defective if they do not pass tests and inspections.
4. Prepare test and inspection reports.

EE. Commissioning Requirements

1. Commissioning: The manufacturer shall supply factory trained representatives for a minimum of 24 hours to commission the lighting control system. Manufacturer shall start up all lighting control equipment and verify that it meets the requirements of this specification.
2. Training: As part of the standard commissioning process, the manufacturer shall train the owner's representatives in the operation of the system to a maximum of 4 hours per building. Manufacturer shall also provide owner's representatives with system operating manuals together with a system training video. Specific training on the operation of the tunable white lighting shall be provided. In addition to the 4 hours an additional 4 hours of training shall be provided for spaces utilizing tunable white light.
3. Technical Support: The manufacturer shall supply 24/7 technical telephone support to the client. If the manufacturer does not provide 24/7 support, they must provide a list of contacts (names and cell phone numbers) in the event of a system failure during non-business hours.
4. Replacement components: The manufacturer shall be able to ship replacement parts within 24 hours for any component that fails during the warranty period.
5. Extended Service Coverage: Maintenance agreements shall be available from the manufacturer to provide service for the system both during and after the warranty period.
6. Requests for commissioning shall be at least two weeks prior to date desired for commissioning.
7. Electrical Sub-contractor shall perform functional testing under the guidance of commissioning agent and in accordance with factory specified guidelines.
8. Factory appointed personnel shall provide commissioning services for the lighting control system.
   a. Verify proper communication over control wires.
   b. Map addresses of occupancy sensors (via Input Modules), light level sensors (via Input Modules), lighting controllers to control units and system server.

c. Map all system data to appropriate BACnet points and assist BMS sub-sub-contractor in programming all points into the BMS system and verifying their proper functionality.

d. Verify communication to control units and system server.

e. Configure occupancy sensors, light level sensors, lighting controllers and other contacts to suit design specifications.

f. Configure and program lighting control sequences as described on contract documents.

g. Demonstrate to Owner and Engineer proper operation of all areas the system is installed.

FF. Testing

1. Upon completion of all line, load and interconnection wiring, and after all fixtures are installed and lamped, a qualified factory representative shall completely configure and test the system.
2. At the time of checkout and testing, the owner's representative shall be thoroughly instructed in the proper operation of the system.

GG. Demonstration

1. Engage a factory-authorized service representative to train Owner's maintenance personnel and building supervisors to adjust, operate, utilize, troubleshoot, conduct software installation, and maintain lighting controls and software training for PC-based control systems. Provide up to eight hours of on-site training with audio and video recorded. Provide a hard copy of manuals, instructional videos, and recorded training session(s) on CD or DVD.
2. Submit shop drawings indicating outline dimensions, connection and support points, weight, specified ratings and materials.
3. Submit product data indicating standard model design tests and options.
4. Submit manufacturer's installation instructions.

HH. OPERATION AND MAINTENANCE DATA

1. Submit operation and maintenance data under.
2. Include procedures for cleaning unit, and replacing components.

II. QUALITY ASSURANCE

1. Manufacturer: Company specializing in distribution transformers with Five [5] years Documented experience.

2.11 ELECTRICAL POWER EQUIPMENT

A. Motor Controls - Manual and Solid State:

1. Individually mounted starters shall be NEMA rated solid state type with thermal overload on each reduced voltage start.
2. Motor Starters shall be furnished by Electrical Sub-Contractor unless part of package mechanical equipment such as rooftop units. Refer to equipment schedules on Electrical Plans and provide accordingly.
3. The solid state motor controller shall use silicon controlled rectifiers (SCR's) to control the voltage to the motor windings. Two SCR's shall be used in a back-

to-back arrangement in each phase to allow alternating current to pass to the motor. When SCR triggering is delayed, the voltage to the load shall be reduced. This phase-controlled operation provides soft starting with stelpless acceleration. Once the motor is running, voltage reduction can improve the motor's operating point at partial load, saving energy and lowering the reactive current. If one or more shorted SCRs are detected, the starter shall not energize. A fault LED will light and if provided with a shunt trip, the main circuit breaker will trip. Provide pump stop option to eliminate water hammer in pumping systems, by giving a controlled decel to the motor voltage. This process shall allow for smooth pressure reduction and quiet check valve operation. The controller shall trip off the line if one or more phases is lost.

4. Starters shall be of size and type required for particular motor horsepower and voltage. Minimum size starter to be size 1 FVNR, unless noted otherwise.
   a. Starters shall have OL reset button, green push-to-test type pilot light to indicate "ON", and "HAND-OFF-AUTO" switch in cover.
   b. Starters to have 120 volt control transformers with fused output being provided for those units operating on 277/480 volt system.
   c. Provide Class 20 fixed heater overloads with auto/manual reset.
   d. Provide four sets of auxiliary contacts of convertible type N.O. to N.C. for each starter.
   e. Motor starters shall have NEMA I enclosures. Those in wet locations shall be NEMA 3R.
   f. Acceptable Manufacturers:
      1) Westinghouse/Culter-Hammer
      2) Square D/Groupe Schneider
      3) Siemens
      4) Allen Bradley
      5) General Electric
      6) Or equal
5. Manual motor starters shall have pilot lights and shall be furnished with thermal overloads on each phase.

B. Motors: Each motor shall have disconnect switch and starter provided under this section.
   1. Provide motor terminal boxes for each motor not furnished with same.

C. Disconnect Switches:
   1. Disconnect (safety) switches shall conform to industrial standards of NEMA, be UL listed and shall be heavy duty type, quick-make, quick-break type with interlocking cover mechanism and provisions for padlocking switch handle in "OFF" position. Three pole toggle switches are not acceptable as substitute for disconnect switches.

2. Disconnect switches shall be of fused or unfused type as indicated with number of disconnecting poles indicated. The grounded conductor shall not be switched. Switches for use with current limiting fuses shall be rejection type and those used in conjunction with motors shall be horsepower rated. Provide oversize termination lugs if required by conductor size.
3. Enclosures shall be of proper NEMA type for intended location and shall be phosphate coated or equivalent code gauge galvanized sheet steel with ANSI #24 dark gray baked enamel finish.
4. Acceptable Manufacturers:
   a. Culter-Hammer/Westinghouse
   b. Square D/Groupe Schneider
   c. Siemens
   d. Allen Bradley
   e. General Electric
   f. Or equal

D. Fuses:
1. Secondary system fuses, rated at 600 volts or less, shall be UL listed and constructed in conformance with the applicable standards set forth by NEMA and ANSI. All fuses of a particular class shall be of same manufacturer.
2. All fuses in distribution panelboards and switchboards shall be class "L" above 600 amperes and class "RK1" for 600 amperes and below.
3. Main, Feeder, and Branch Circuits:
   a. Circuits 601 amperes and above shall be protected by (Bussmann type KRP-C LOW-PEAK) current limiting time delay fuses.
   b. Circuits 0-600 amperes shall be protected by (Bussmann "LOW-PEAK" dual element), time delay current limiting fuses, LPN-RK (250 volts), LPS-RK (600 volts), UL class RK-1.
4. Acceptable Manufacturers:
   a. Bussmann, Division of McGraw
   b. Gould/Shawmut
   c. GEC-ALSTHOM
   d. Or equal

2.12 ELECTRICAL SYSTEM CONTROLS AND INSTRUMENTS

A. Provide a complete power system consisting of branch circuits, motor disconnect switches, pushbutton stations, motor starters, and other devices to connect up and leave in operating condition each piece of electrically operated equipment provided either under this section or other Divisions.

B. All control wiring, not indicated in the electrical specifications or not shown on electrical drawings, will be provided by Temperature Control Subcontractor.

2.13 GROUNDING SYSTEM

A. All equipment and systems shall be grounded. Refer especially to NEC Section 250 Requiring Connections to Building Steel, Foundation, Water Service, and Interior Piping. Provide transformer pad grounding in accordance with utility company standards.

B. The grounded conductor shall be supplemented by an equipment grounding system.

C. The equipment grounding system shall be installed so all conductive items in close proximity to electrical circuits operate continuously at ground potential and provide a low impedance path for ground fault currents.

D. Grounding conductors shall be so installed as to permit shortest and most direct path to ground.

E. Maximum measured resistance to ground of 5.0 ohms shall not be exceeded. Ground separately derived systems (dry type transformers) in accordance with Article 250-30 by grounding neutral to transformer ground lug and providing insulated grounding electrode conductor to nearest effectively grounded building steel or, if unavailable, to nearest available effectively grounded metal water pipe.

F. Equipment grounding conductors and straps shall be sized in compliance with Code Table 250-122.

G. Grounding conductors shall be insulated with green color. Grounding conductors for use on isolated ground receptacles shall be green with trace color to differentiate between normal ground conductors.

H. Branch circuits shall consist of phase and grounded conductor installed in common metallic raceway. All receptacle circuits shall have dedicated neutrals. All circuits shall have a separate insulated grounding conductor installed. Any flexible cable system or non-metallic raceway system shall have an insulated grounding conductor. Any cable system for use on isolated ground circuits shall have both an isolated ground conductor as well as an equipment ground conductor, both of which shall be insulated.

I. Each electrical expansion fitting shall be furnished with a bonding jumper. Provide grounding bushings and ground connections for all raceways terminating below equipment where there is no metal-to-metal continuity.

J. Continuity between all metallic and nonmetallic raceway systems and equipment shall be maintained.

K. Outdoor lighting fixtures shall be grounded and bonded in common with building system via a separate grounding conductor.

L. Grounding Conductors: Route along shortest and straightest paths possible, unless otherwise indicated or required by Code. Avoid obstructing access or placing conductors where they may be subjected to strain, impact, or damage.

M. Common Ground Bonding with Lightning Protection System: Comply with NFPA 780 and UL 96 when interconnecting with lightning protection system. Bond electrical power system ground directly to lightning protection system grounding conductor at closest point to electrical service grounding electrode. Use bonding conductor sized same as system grounding electrode conductor, and install in conduit.

N. Ground Rods: Drive rods until tops at least 6 inches below finished floor or final grade, unless otherwise indicated. Interconnect ground rods with grounding electrode conductor below grade.

O. Dry type transformer: Install an insulated grounding conductor from a transformer neutral to the building steel by means of copper wire, as scheduled on the drawings.

P. Grounding and Bonding for Piping:

1. Metal Water Service Pipe: Install insulated copper grounding conductors in conduit, from a grounding bus of the building's main service equipment to main metal water service entrances to building. Connect grounding conductors to main metal water service pipes using a bolted clamp connector or by bolting a lug-type connector to a pipe flange, using one of the lug bolts of the flange. Where a dielectric main water fitting is installed, connect grounding conductor on street side of fitting. Bond metal grounding conductor conduit or sleeve to conductor at each end.
2. Water Meter Piping: Use braided-type bonding jumpers to electrically bypass water meters. Connect to pipe with a bolted connector.
3. Bond each aboveground portion of gas piping system downstream from equipment shutoff valve.

Q. Refer to Technology Specifications for additional grounding requirements.

2.14 MAIN BUILDING SWITCHBOARD

A. Main building switchboard shall be constructed in accordance with UL 891 and ANSI standards and of the required number of vertical sections bolted together to form one metal enclosed rigid structure. The sides, top, and rear shall be covered with removable plates. Switchboard shall include all protective services and equipment as listed on drawings with necessary interconnections, instrumentation, and control wiring. Buses shall be aluminum. Provide oversize termination lugs for any terminations requiring same due to conductor sizing.

B. Record drawings shall be furnished with the following: Complete rating, short-circuit withstandability of bus and of lowest rated device, overall outline dimensions, including space available for raceways, circuit schedule showing circuit number, device description, device fuse clip ampere rating, conductor ratings and one-line diagram with each circuit device numbered.

C. Each section shall be 90 in. high, self-supported, and same depth as incoming line section, approximately 30 in. deep. Main protective device shall be individually mounted with front coverplate and bus connection straps. Where called for on schedule, "space" shall mean to include necessary bus, supports, and connections, leaving out only the breaker itself. Bus structure shall be arranged to permit future additions.

D. Switchboard shall be arranged for operation as follows:
   1. Voltage - 480Y/277 volts
   2. Frequency - 60 cycles
   3. Service - 3 phase, 4 wire, ampere capacity as indicated on drawings.
   4. Neutral - full capacity
   5. Available short circuit current at line terminals – 100,000 RMS amperes symmetrical.
   6. Integrated equipment rating – 65,000 AIC
   7. Copper ground bus, full length
   8. UL service entrance label

E. Provide electrical metering and voltage protection system equal to Square D Power Logic, Westinghouse IQ Data Plus or Siemens 4900 Series at main breaker. Coordinate Baud rate for meter with BMS system to ensure compatibility for communication.

F. Main service entrance device shall be an insulated-case circuit breaker (ICCB): Rating as shown on drawings, 100 percent rated, sealed circuit breaker with interrupting capacity rating to meet available fault current.
   1. Fixed circuit-breaker mounting.
   2. Two-step, stored-energy closing.
   3. Microprocessor-based trip unit with interchangeable rating plug, trip indicators, and the following field-adjustable settings:
   4. Instantaneous trip.
   5. Long- and short-time time pick-up and time delay adjustments.
   6. Ground-fault pickup level, time delay, and I2t response.
   7. Safety features: Phase loss protection.
   8. Provide maintenance mode arc flash reduction feature on main circuit breaker.

G. Branch Devices shall be standard molded case circuit breakers, current limiting circuit breakers, or other devices as scheduled. Branch devices shall be mounted in panelboard type construction.

H. Switchboard feeder protective devices shall be molded case circuit breakers. The circuit breakers 250 amperes and larger shall be with a solid-state trip, all other circuit breakers shall be of thermal-magnetic type. Breakers shall be built, tested, and labeled in accordance with UL 489.

I. Include space and provisions for utility company metering. Refer to electric service section of this Division.

J. Molded-Case Circuit Breaker (MCCB): Comply with UL 489, with interrupting capacity to meet available fault currents.

1. Thermal-Magnetic Circuit Breakers: Inverse time-current element for low-level overloads, and instantaneous magnetic trip element for short circuits.
2. Adjustable Instantaneous-Trip Circuit Breakers: Magnetic trip element with front-mounted, field-adjustable trip setting.
3. Electronic trip circuit breakers with field-replaceable rating plug and the following field-adjustable settings:
4. Instantaneous trip.
5. Long- and short-time pickup levels.
6. Long- and short-time time adjustments.
7. Ground-fault pickup level, time delay, and I2t response.
8. Molded-Case Circuit-Breaker (MCCB) Features and Accessories:
9. Standard frame sizes, trip ratings, and number of poles.
10. Lugs: Suitable for number, size, trip ratings, and conductor material.
11. Application Listing: Type HACR for heating, air conditioning and refrigeration equipment power feeders.
12. Shunt Trip: 120-V trip coil energized from separate circuit, where shown on the drawings.

K. Acceptable Manufacturers: Square D is the Basis of Design.

1. Square D/Groupe Schneider
2. Cutler-Hammer/Westinghouse
3. Siemens
4. Or equal

2.15 PANELBOARDS

A. Panelboards shall be dead-front, door in door safety type equipped with single or multi-pole circuit breakers suitable for 120/208 volt or 277/480 volt, 3 phase, 4 wire operation.

B. Buses shall be aluminum. Panelboards shall have a circuit directory card mounted in a frame with plastic cover on inside of door. Panelboards to have a copper ground bus with terminals for each circuit. Panelboards serving isolated ground receptacles shall have a separate ground bus for terminations of the isolated grounds. The isolated ground bus shall be mounted to the panel tub via non-conducting means with a separate grounding conductor run to the normal panel ground bus. Provide oversize lugs for any termination requiring same due to oversize conductors. Provide 200% neutral buses on all 120/208 volt panelboards.

C. Cabinets shall be minimum of 20 inch wide and be made of code gauge steel. Surface type shall be ordered without knockouts.

D. Trims shall be made of code gauge steel, surface or flush as indicated. Panelboards shall be keyed alike. Trims shall be provided with full length piano hinge on one side, and secured to tub with sufficient quantity of latches opposite the hinge side to allow trim to fit flush with tub and when released, allow full access to wiring gutters. Inner door shall allow access to circuit breakers only.

E. Panelboards shall be of the following types with minimum circuit breaker frame sizes listed below. Refer to schedules for larger circuit breaker frame sizes due to fault current availability. Square D is the Basis of Design.

1. 120/208 volt, three phase, four wire. Symmetrical interrupting capacity 10,000 AIC.

Style	
Westinghouse type PRL-1	BAB Breakers (bolt-on)
Square D type NQOD	QOB Breakers (bolt-on)
Siemens type CDP-7	BQ Breakers (bolt-on)
Or equal	

2. 277/480 volt, three phase, four wire. Symmetrical interrupting capacity 65,000 AIC.

Style	
Westinghouse type PRL-2	GHB Breakers (bolt-on)
Square D type NEHB	EHB Breakers (bolt-on)
Siemens type CDP-7	BQCH Breakers (bolt-on)
Or equal	

3. Distribution Panels:
   a. Where scheduled as circuit breaker type, symmetrical interrupting capacity 65,000 AIC.
   b. Westinghouse type PRL-3 FD Breakers
   c. Square D I-Line type FA Breakers
   d. Siemens SPP FXD6 Breakers
   e. Or equal

F. Panelboards and distribution panels shall be of same manufacturer as switchboard. Refer to drawings where higher interrupting are required.

G. Molded-Case Circuit Breaker (MCCB): Comply with UL 489, with interrupting capacity to meet available fault currents.

1. Thermal-Magnetic Circuit Breakers: Inverse time-current element for low-level overloads, and instantaneous magnetic trip element for short circuits. Adjustable magnetic trip setting for circuit-breaker frame sizes 150 A and larger.

2. Adjustable Instantaneous-Trip Circuit Breakers: Magnetic trip element with front-mounted, field-adjustable trip setting.
3. Electronic trip circuit breakers with rms sensing; field-replaceable rating plug or field-replicable electronic trip; and the following field-adjustable settings:
4. Instantaneous trip.
5. Long- and short-time pickup levels.
6. Long- and short-time time adjustments.
7. Ground-fault pickup level, time delay, and I2t response.
8. GFCI Circuit Breakers: Single- and two-pole configurations with Class A ground-fault protection (5-mA trip).
9. Ground-Fault Equipment Protection (GFEP) Circuit Breakers: Class B ground-fault protection (30-mA trip).
10. Arc-Fault Circuit Interrupter (AFCI) Circuit Breakers: Comply with UL 1699; 120/240-V, single-pole configuration.

H. Distribution panel feeder protective devices shall be molded case circuit breakers. The circuit breakers 250 amperes and larger shall be with a solid-state trip, all other circuit breakers shall be of thermal-magnetic type. Breakers shall be built, tested, and labeled in accordance with UL 489.

I. All power panels fed from K-13 transformers shall have surge protection. Coordination and Arc flash study shall be submitted with shop drawing submittal. All circuit breaker selection shall meet study recommendations and shall be provided as recommended by study.

J. Electrical Sub-contractor shall provide infrared scanning of all panelboards after three months past substantial completion. Provide report indicating status of all terminations at respective panelboards per phase.

2.16 DRY-TYPE TRANSFORMERS

A. Transformer Specification:

1. Compatibility: This product must facilitate the ability of the electrical system to supply a sinusoidal voltage in order to improve the long-term compatibility of the electrical system with all types of linear and nonlinear connected loads today and in the future. All national and international standards on harmonics and power quality set limits on levels of voltage distortion to maintain compatibility.
2. Alluminum-wound, 3-phase, common core, ventilated, dry-type, isolation transformer built to NEMA ST20 and relevant NEMA, UL and IEEE standards; 200 percent rated neutral; 60Hz rated; Transformers 750 kVA and less, 600 volt primary and less, shall be U.L. and CSA Listed and bear the label. All terminals, including those for changing taps, must be readily accessible by removing a front cover plate. Windings shall be continuous with terminations brazed or welded. 10kV BIL.

3. Insulation System:
   a. Shall be NOMEX-based with an Epoxy Co-polymer impregnant for lowest environmental impact, long term reliability and long life expectancy
   b. Class: 220 degrees C
   c. Impregnant Properties for low emissions during manufacturing, highest reliability and life expectancy
   d. Epoxy co-polymer
   e. VOC: less than 1.65 lbs/gal (low emissions during manufacturing)
   f. Water absorption (24hrs at 25C): less than 0.05 percent (superior insulation, longer life)
   g. Chemical Resistance: Must have documented excellent performance rating by supplier
   h. Dielectric Strength: minimum of 3200 volts/mil dry (for superior stress, overvoltage tolerance)
   i. Dissipation Factor: max. 0.02 at 25C to reduce aging of insulation, extending useful life
4. Operating Temperature Rise: 130 degrees C in a 40 degree C maximum ambient
5. Noise levels:
   a. Per NEMA ST-20
   b. Production Test every unit. Data to be available upon request.
6. UL Listed & Labeled K-Rating: K-7 or higher
7. Maximum No Load Losses
   a. Transformers are energized 24 hours a day for their entire life, potentially 40 years or more. These losses are incurred whether the transformer is loaded or not, and cost the user many times the purchase price of the transformer even at current energy rates.
   b. No load losses shall not exceed: 15kVA: 60W, 30kVA: 99W, 45kVA: 130W, 75kVA: 180W, 112.5kVA: 260W, 150kVA: 330W, 225kVA: 450W, 300kVA: 560W, 500kVA: 850W
8. Efficiency at 15 percent loading
   a. Data shows that transformers are typically very lightly loaded for extended periods of time, therefore to minimize operating cost under real world loading conditions, efficiency at 1/6 loading shall be maximized.
   b. Efficiency at 1/6 load shall meet or exceed: 15kVA: 97.3 percent, 30kVA: 97.6 percent, 45kVA: 97.9 percent, 75kVA: 98.2 percent, 112.5kVA: 98.4 percent, 150kVA: 98.5 percent, 225kVA: 98.6 percent, 300kVA: 98.7 percent, 500kVA: 98.8 percent, 750kVA: 98.9 percent
9. DOE 10 CFR Part 430 CSL 3 Efficiency requirement, tested per NEMA TP-2:
   a. Shall meet or exceed: 15kVA: 97.6 percent, 30kVA: 98.1 percent, 45kVA: 98.3 percent, 75kVA: 98.6 percent, 112.5kVA: 98.8 percent, 150kVA: 98.9 percent, 225kVA: 98.9 percent, 300kVA: 99.0 percent, 500kVA: 99.1 percent, 750kVA: 99.2 percent

10. Efficiency under k-7 nonlinear load at 50 percent of nameplate rating:
    a. 15kVA: 97.3 percent, 30kVA: 97.7 percent, 45kVA: 97.9 percent, 75kVA: 98.4 percent, 112.5kVA: 98.7 percent, 150kVA: 98.8 percent, 225kVA: 98.8 percent, 300kVA: 98.8 percent, 500kVA: 98.9 percent, 750kVA: 98.9 percent
11. Voltage Taps: For transformers 30kVA-300kVA, provide two 2-1/2 percent full capacity taps above and below nominal primary voltage. For transformers 15kVA and smaller as well as 500kVA and larger provide one 5 percent full capacity tap above and below nominal primary voltage.
12. Impedance: Between 3.5 percent and 5.8 percent unless otherwise noted.
13. Enclosure type: Ventilated NEMA 2, drip-proof [optional NEMA 3R]
14. Maximum Footprint for 130 degree C rise model in a NEMA 1 enclosure:
    a. 17 in. Wide x 17 in. Deep x 27 in. High for 15kVA.
    b. 26 in. Wide x 18 in. Deep x 30 in. High for 30kVA, 45kVA
    c. 33 in. Wide x 22 in. Deep x 40 in. High for 75kVA, 112.5kVA
    d. 38 in. Wide x 28 in. Deep x 52 in. High for 150kVA
    e. 38 in. Wide x 32 in. Deep x 52 in. High for 225kVA, 300kVA
    f. 52 in. Wide x 38 in. Deep x 61 in. High for 500kVA
    g. 63 in. Wide x 46 in. Deep x 67 in. High for 750kVA

B. Regulations for low-voltage general purpose dry-type transformer (LVGP).

Single Phase		Three Phase	
kVA	Efficiency (%)	kVA	Efficiency (%)
15	97.7	15	97.89
25	98.0	30.=	98.23
37.5	98.2	45	98.40
50	98.3	75	98.60
75	98.5	112.5	98.74
100	98.6	150	98.83
167	98.7	225	98.94
250	98.8	300	99.02
333	98.9	500	99.14
		750	99.23
		1000	99.28

C. Transformer Features
1. Electrostatic Shield: Each winding shall be independently single shielded with a full-width copper electrostatic shield.

D. Acceptable Manufacturers or Approved Equal: Square D is the Basis of Design.
1. Square D Company
2. Powersmiths International Corp.
3. Eaton

4. Or Equal

2.17 ELECTRIC SERVICE

A. Coordinate and cooperate with Eversource, hereinafter called utility company, with respect to providing service and metering.

B. Provide all system raceways, elbows, pull wires, grounding for vault including mesh. Utility company will provide pad mounted transformer and primary conductors including making up of all terminations and connections.

C. Provide secondary service complete including all conductors, raceways, and connectors at transformer. Provide oversize lugs if required due to conductor sizing. Attachment of secondary conductors to the transformer terminals will be done by utility company.

D. All work to be done in accordance with utility company standards.

E. Metering: All usage will be on one secondary meter. Utility Company will furnish current transformers and potential transformers to be installed in the CT section of the main switchboard for cold sequence metering. Meter socket shall be provided under this section and located in accordance with Utility Company Standards. Meter will be by Utility Company. Meters shall be ordered with KYZ Pulse output for connection to Building Management System.

2.18 MANUAL TRANSFER SWITCH

A. Scope:

1. Electrical SubContractor shall furnish, deliver, install and test the manual transfer switches as specified herein and in accordance with the drawings.

B. Quality Assurance:

1. Manual transfer switch shall be UL listed and labeled under the UL 1008 standard.
2. Manual transfer switch manufacturer shall provide a complete factory assembled, wired and tested manual transfer switch.
3. Manual transfer switch shall be factory Hi-pot tested for a period of not less than 60 seconds.
4. Manual transfer switch installation shall meet all applicable NEC standards.

C. Submittals:

1. Electrical SubContractor shall submit manufacturer's drawings and data of manual transfer switches for Engineer's approval prior to start of fabrication. Drawings and data shall include, as a minimum, dimensioned general arrangement drawings and wiring diagrams, UL listing information including UL control or file number, component data, mounting provisions, conduit entry locations and installation instructions.
2. Upon installation of manual transfer switches Electrical SubContractor shall submit manufacturer's Operating & Maintenance Manual which shall include as a minimum:
   a. Certified as-built General Arrangement drawings and Wiring Diagram.

b. Materials / Component List including part numbers.
c. Maintenance and service requirements.
d. Certificate of Compliance and hi-pot test data.

D. Warranty:

1. Manual transfer switches shall be covered by manufacturer's warranty for a minimum period of (1) one year after shipment from manufacturer.

E. General:

1. All equipment shall be new.
2. Manual transfer switch manufacturer must have produced and sold manual transfer switches as a standard product for a minimum of (3) years.
3. Manual transfer switches shall be molded case circuit breaker type; knife switch or fused switches are not acceptable.
4. Electrical SubContractor shall be responsible for the equipment until it has been installed and is finally inspected, tested and accepted in accordance with the requirements of this Specification.
5. Manual transfer switches shall be StormSwitch, Model "SSDX-400A-H-400A-H-480-3-1-1-D-C" as manufactured by ESL Power Systems, Inc. or equal as approved by the Engineer.

F. Manual Transfer Switches:

1. Manual transfer switch shall consist of (2) two mechanically-interlocked molded case circuit breakers, cam-style male connectors, power distribution block and grounding terminals, all housed within a padlockable enclosure.
2. Manual transfer switch enclosure shall be Type 3R, constructed of continuous seam-welded, powder coated galvanneal steel. The main access shall be through an interlocked, hinged door that extends the full height of the enclosure. Access for portable generator cables with female cam-style plugs shall be via cable entry openings in the bottom of enclosure. A hinged flap door shall be provided to cover the cable openings when cables are not connected; the hinged flap door shall allow cable entry only after the main access door has been opened. Enclosure shall be powder coated after fabrication; color shall be light gray RAL 7038.

3. Cam-style male connectors (inlets) shall be UL Listed single-pole separable type and rated 400 amps at 600VAC. Cam-style male connectors shall be color coded. Cam-style male connectors shall be provided for each phase and for ground, and shall also be provided for neutral if required. Each of the phase cam-style male connectors within the enclosure shall be factory-wired to a molded case circuit breaker. The ground cam-style male connectors shall be bonded to the enclosure, and a ground lug shall be provided for connection of the facility ground conductor. The neutral cam-style male connectors, if required, shall be factory wired to a power distribution block. None of the cam-style male connectors shall be accessible unless both molded case circuit breakers are in the “OFF” position and the main access door is open.
4. A power distribution block shall be provided for load-side field wiring. The power distribution block shall be factory wired to the molded case circuit breakers.
5. Molded case circuit breakers shall be UL Listed and the short circuit interrupt rating shall be a minimum of 35kAIC at 480VAC. Trip rating of the molded case circuit breakers shall be as shown on the drawings. One molded case circuit breaker shall be fed from utility power; the other molded case circuit breaker shall be fed from the cam-style male connectors to supply power from a portable generator. Both molded case circuit breakers shall include UL Listed door-mounted operating mechanisms, preventing the opening of the main access door unless both breakers are in the “OFF” position. Both molded case circuit breakers shall be mounted behind a deadfront panel. The load-side of the molded case circuit breakers shall not be energizable unless the main access door is closed and one of the molded case circuit breakers is in the “ON” position. The (2) molded case circuit breakers shall be safety interlocked by mechanical means to ensure that only one breaker can be closed at any given time.
6. Manual transfer switch shall be suitable for use as service equipment in the USA.

G. Installation:

1. Prior to installation of manual transfer switches, Electrical SubContractor shall examine the areas and conditions under which the manual transfer switch is to be installed and notify the Engineer in writing if unsatisfactory conditions exist.
2. Manual transfer switch shall be installed as shown on the drawings and per the manufacturer’s written instructions. In addition, the installation shall meet the requirements of local codes, the National Electrical Code and National Electrical Contractors Association’s “Standard of Installation”.
3. Conduit entry into the manual transfer switch shall be by Electrical SubContractor; Electrical SubContractor shall furnish and install listed watertight conduit hubs, as manufactured by MYERS or T&B, for each conduit entry on the manual transfer switch. The incoming hub size shall match the conduit size for feeders and ground as shown on the drawings. The outgoing hub size shall match the conduit size for loads and ground as shown on the drawings. Hubs shall be properly installed and tightened to maintain Type 3R integrity of the manual transfer switch enclosure.

4. Electrical SubContractor shall terminate feeder conductors, load conductors and ground per the manufacturer's instructions. Use copper wire only for all conductors and grounds. All field wiring terminations shall be torqued as required per the instructions on the manual transfer switch's power distribution block, circuit breaker & ground lug.

H. Field Testing:

1. Prior to energizing manual transfer switch, the Electrical SubContractor shall perform the following checks and tests as a minimum:
   a. Verify mounting and connections are complete and secure.
   b. Verify internal components and wiring are secure.
   c. Perform continuity check of all circuits.
   d. Perform 1,000 VDC megger test on feeder, load and ground cables.
   e. Verify deadfront is secure.
   f. With the manual transfer switch deadfront in place and the main access door closed and properly latched, actuate both Operator Mechanisms; verify only
   g. (1) breaker at a time can be turned to the "ON" position.
   h. Confirm operation of the manual transfer switch ground receptacle by attaching a plug to the manual transfer switch ground receptacle and then verify that the plug is grounded to the facility ground.
   i. Once utility power has been applied, confirm operation of manual transfer switch by following directions on main access door.

2.19 FIRE ALARM AND DETECTION SYSTEM WITH MASS NOTIFICATION (Voice Evacuation Required)

A. Description:

1. This section of the specification includes the furnishing, installation, connection and testing of the microprocessor controlled, intelligent reporting fire alarm and Mass Notification equipment required to form a complete, operative, coordinated system. It shall include, but not be limited to, alarm initiating devices, alarm notification appliances, Fire Alarm Control Panel (FACP), auxiliary control devices, Local operator Controls, annunciators, Smoke Control Graphic Panel and wiring as shown on the drawings and specified herein.
2. The fire alarm system shall comply with requirements of latest NFPA Standard 72 for Protected Premises Signaling Systems except as modified and supplemented by this specification. The system shall be electrically supervised and monitor the integrity of all conductors.
3. The fire alarm manufacturer shall be of the highest caliber and insist on the highest quality. The system shall be manufactured by an ISO 9001 certified company and meet the requirements of BS EN9001: ANSI/ASQC Q9001-1994.
4. The FACP and peripheral devices shall be manufactured 100 percent by a single U.S. manufacturer (or division thereof).

5. The system and its components shall be Underwriters Laboratories, Inc. listed under the appropriate UL testing standard as listed herein for fire alarm applications and shall be in compliance with the UL listing.
6. Each designated zone shall transmit separate and different alarm, supervisory and trouble signals to the Fire Command Center (FCC) and designated personnel in other buildings at the site via a multiplex communication
7. The installing company shall employ NICET (minimum Level II Fire Alarm Technology) technicians on site to guide the final check-out and to ensure the systems integrity.

B. Scope:

1. An intelligent reporting, microprocessor controlled Fire detection, Smoke Control and Mass Notification system shall be installed in accordance with the specifications and drawings.
2. Basic Performance:
   a. Alarm, trouble and supervisory signals from all intelligent reporting devices shall be encoded onto NFPA Style 7 (Class A) Signaling Line Circuits (SLC).
   b. Initiation Device Circuits (IDC) shall be wired Class A (NFPA Style D).
   c. Notification Appliance Circuits (NAC) shall be wired Class A (NFPA Style Z).
   d. Digitized electronic signals shall employ check digits or multiple polling.
   e. Power for initiating devices and notification appliances must be from the main fire alarm control panel, the transponder to which they are connected or to a Field Charging Power Supply (FCPS).
   f. A single ground or open on any system signaling line circuit, initiating device circuit, or notification appliance circuit shall not cause system malfunction, loss of operating power or the ability to report an alarm.
   g. Alarm signals arriving at the main FACP shall not be lost following a power failure (or outage) until the alarm signal is processed and recorded.
3. Basic System Functional Operation: When a fire alarm condition is detected and reported by one of the system initiating devices or appliances, the following functions shall immediately occur:
   a. The FACP alarm LED on the FACP shall flash.
   b. A local piezo-electric signal in the FACP control panel shall sound.
   c. The 80-character LCD display on the local FACP node and on the intelligent network display shall indicate all information associated with the fire alarm condition, including the type of alarm point, and its location within the protected premises. This information shall also be displayed on the network reporting terminal.
   d. Printing and history storage equipment shall log the information associated with the fire alarm control panel condition, along with the time and date of occurrence.

e. All system output programs assigned via control-by-event interlock programming to be activated by the particular point in alarm shall be executed, and the associated system outputs (alarm notification appliances and/or relays) shall be activated on either local outputs or points located on other network nodes.

4. Software Modifications:

a. Provide the services of a factory trained and authorized technician to perform all system software modifications, upgrades or changes. Response time of the technician to the site shall not exceed 4 hours.

b. Provide all hardware, software, programming tools and documentation necessary to modify the fire alarm network on site. Modification includes addition and deletion of devices, circuits, zones and changes to system operation and custom label changes for devices or zones. The system structure and software shall place no limit on the type or extent of software modifications on-site. Modification of software shall not require power-down of the system or loss of system fire protection while modifications are being made.

5. Certifications:

a. Together with the shop drawing submittal, submit a certification from the major equipment manufacturer indicating that the proposed supervisor of installation and the proposed performer of contract maintenance is an authorized representative of the major equipment manufacturer and trained on network applications. Include names and addresses in the certification.

C. Applicable Publications:

1. The publications listed below form a part of this specification. The publications are referenced in text by the basic designation only.

a. National Fire Protection Association (NFPA) - USA:

1) No. 72 National Fire Alarm Code
2) No. 70 National Electric Code
3) No. 101 Life Safety Code

b. Underwriters Laboratories Inc. (UL) - USA:

1) No. 50 Cabinets and Boxes
2) No. 268 Smoke Detectors for Fire Protective Signaling System
3) No. 864 Control Units for Fire Protective Signaling Systems
4) No. 268A Smoke Detectors for Duct Applications
5) No. 521 Heat Detectors for Fire Protective Signaling Systems
6) No. 228 Door Closers-Holders for Fire Protective Signaling Systems
7) No. 464 Audible Signaling Appliances
8) No. 38 Manually Actuated Signaling Boxes
9) No. 346 Waterflow Indicators for Fire Protective Signaling Systems

10) No. 1481 Power supplies for Fire Protective Signaling Systems
11) No. 1076 Control Units for Burglar Alarm Proprietary Protective Signaling Systems
12) No. 1971 Visual Notification Appliances

c. Local and State Building Codes.

d. All requirements of the Authority Having Jurisdiction (AHJ).

D. Approvals:

1. The system must have proper listing and/or approval from the following nationally recognized agencies:

a. UL Underwriters Laboratories Inc.

b. FM Factory Mutual

c. MEA Material Equipment Acceptance (NYC)

d. CSFM California State Fire Marshal

2. The fire alarm control panel, shall meet the modular labeling requirements of Underwriters Laboratories, Inc. Each subassembly, including all printed circuits, shall include the appropriate UL modular label. Systems which do not include modular labels which may require return to the manufacturer for system upgrades, and are not acceptable.

E. Equipment and Material - General:

1. All equipment and components shall be new, and the manufacturer's current model. The materials, appliances, equipment and devices shall be tested and listed by a nationally recognized approvals agency for use as part of a protected premises protective signaling (fire alarm) system. The authorized representative of the manufacturer of the major equipment, such as control panels, shall be responsible for the satisfactory installation of the complete system.

2. All equipment and components shall be installed in strict compliance with each manufacturer's recommendations. Consult the manufacturer's installation manuals for all wiring diagrams, schematics, physical equipment sizes. before beginning system installation. Refer to the riser/connection diagram for all specific system installation/termination/wiring data.

3. All equipment shall be attached to walls and ceiling/floor assemblies and shall be held firmly in place. (e.g., detectors shall not be supported solely by suspended ceilings). Fasteners and supports shall be adequate to support the required load.

4. All fire alarm equipment that requires keys shall be keyed alike.

F. Conduit and Wire:

1. Conduit:

a. Conduit shall be in accordance with the National Electrical Code (NEC), local and state requirements.

b. All wiring shall be installed in conduit or raceway where exposed. Conduit fill shall not exceed 40 percent of interior cross sectional area where three or more cables are contained within a single conduit.

c. Cable must be separated from any open conductors of power, or Class 1 circuits, and shall not be placed in any conduit, junction box or raceway containing these conductors, per NEC Article 760-29.

d. Wiring for 24 volt control, alarm notification, emergency communication and similar power-limited auxiliary functions may be run in the same conduit as initiating and signaling line circuits. All circuits shall be provided with transient suppression devices and the system shall be designed to permit simultaneous operation of all circuits without interference or loss of signals.

e. Conduit shall not enter any FACP, or any other remotely mounted control panel equipment or backboxes, except where conduit entry is specified by the FACP manufacturer.

f. Conduit shall be 3/4 inch (19.1 mm) minimum.

g. Fire alarm low energy plenum rated cable is acceptable for fire alarm for concealed locations where allowed by code and not subject to damage.

2. Wire:

a. All fire alarm system wiring must be new, unless specified herein.

b. Wiring shall be in accordance with local, state and national codes (e.g., NEC Article 760) and as recommended by the manufacturer of the fire alarm system. Number and size of conductors shall be as recommended by the fire alarm system manufacturer, but not less than 16 AWG (1.02 mm) for initiating device circuits and signaling line circuits, and 14 AWG (1.32 mm) for notification appliance circuits.

c. All wire and cable shall be listed and/or approved by a recognized testing agency for use with a protective signaling system.

d. Wiring used for the SLC multiplex communication loop shall be twisted and shielded unless specifically excepted by the fire alarm equipment manufacturer.

e. All field wiring shall be completely supervised.

3. Terminal Boxes, Junction Boxes and Cabinets: All boxes and cabinets shall be UL listed for the intended purpose.

4. Initiating circuits shall be arranged to serve like categories (manual, smoke, waterflow). Mixed category circuitry shall not be permitted except on signaling line circuits connected to intelligent reporting devices.

5. The FACP shall be connected to a separate dedicated branch circuit, maximum 20 amperes. This circuit shall be labeled at the main power distribution Panel as FIRE ALARM and contain a breaker lock. Fire alarm control panel primary power wiring shall be 12 AWG. The FACP cabinet shall be grounded securely to either a cold water pipe or grounding rod.

6. Submittals

a. Submit complete documentation for the Fire Alarm/Life Safety System showing the Model Number, type, rating, size, style, Manufacturer's Names, and Manufacturer's Catalog Data Sheets for all items to ensure compliance with these Specifications. Submittals shall be prepared by a NICET level III and reviewed signed and dated by a NICET IV.

b. Upon Contract Bid approval, and prior to start of system installation, submit Shop Drawings to and obtain written approval from the Fire

Department, prior to ordering fire alarm equipment. General requirements are as follows:

1) Submittal of fire rated sealant for penetrations.
2) A complete point to point riser diagram of the fire alarm system. (Typical riser diagrams are not acceptable).
3) A complete point to point installation diagram. (Typical installation diagrams are not acceptable).
4) A complete list of current drain requirements during normal supervisory, trouble, and alarm condition.
5) Battery standby calculations showing total standby power required to meet the specified system requirements.
6) Supplier's qualifications indicating years in business, service policies, warranty definitions, and list of similar installations.
7) Electrical Subcontractor qualifications, indicating years in business, prior experience with installations that include the type of equipment that is to be supplied, and installers license number and type of license.
8) Circuit calculations for all Notification Appliance Circuits. Calculations shall conform to UL864 10th edition and shall be performed using 19vdc starting voltage with a drop allowance to minimum nameplate voltage for the devices on each circuit.
9) Amplifiers shall be calculated based on the following tap settings".
    a) Unless otherwise indicated, set to .5 watt.
    b) Gymnasium, Cafeteria/Student Dining, Auditorium, rooms greater than 1,000 square feet and Mechanical rooms shall be set at 2 watts.
    c) Corridors shall be set at .5 watt.
    d) Classrooms shall be set at 1 watt.
    e) Offices shall be set at .25 watt.
    f) Provide one back up amplifier for each 50 watts provided to support the system. Provide 75% spare capacity.

c. All substitute equipment proposed as equal to the equipment specified herein, shall meet or exceed the fire alarm equipment standards. For equipment other than that specified, the Electrical Subcontractor shall supply proof that such substitute equipment does in fact equal or exceed the features, functions, performance, and quality of the specified equipment. Submit this information for approval by the engineer at least ten (10) days prior to bid.

G. Fire Alarm Control Panel and Fire Command Center:

1. Fire alarm control panel shall be Autocall 4100ES, EST3, Notifier NFS-3030 or equal. Panel shall contain a microprocessor based central processing unit (CPU). Autocall is the Basis of Design. The FACP shall communicate with and control the following types of equipment used to make up the system: intelligent detectors, addressable modules, transponders, local and remote operator terminals, printers, annunciators, Smoke Control Panels and monitoring/controls, and other system controlled devices. Locate equipment in the Fire Command Center. Provide lockable cabinet for as built drawings in the Fire Command Center.

2. Node Capacity and General Operation:

   a. Each node shall provide, or be capable of, expansion to 250 intelligent addressable devices per loop plus 3000 annunciation points per system. FACP shall support a minimum of 10 intelligent loops.

   b. Each FACP node shall include a full featured operator interface control and annunciation panel which shall include a backlit Liquid Crystal Display (LCD), individual, color coded system status LEDs, and an alpha-numeric keypad for field programming and control of the node.

   c. All programming or editing of the existing programming the system shall be achieved without special equipment or interrupting the alarm monitoring functions of the fire alarm control panel.

   d. The system shall include emergency voice communications utilizing distributed amplification and intelligence such that loss of operation by the main FACP will not result in the loss of evacuation signal throughout the balance of the building.

   e. The system shall include Fire Fighter Smoke Control Integration to operate remote devices. H-O-A switches shall be provided for manual override control of all required HVAC system fans. H-O-A switches shall include a status monitor indicating the actual status of each fan and Fire Smoke Damper related to smoke control system.

      1) Manual operation of individual fan or damper control switches shall also light the individual "HVAC System On" or "HVAC System Off" LED indicator for the affected system at the Fire Command Center.

   f. Each FACP node shall provide the following features:

1)	Block Acknowledge	Printer Interface
2)	Charger rate Control	CRT Display Interface
3)	Control-by-Time	Non-Alarm Module Reporting
4)	Day/Night Sensitivity	Periodic Detector Test
5)	Device Blink Control	Remote Page
6)	Drift Compensation	Trouble Reminder
7)	NFPA 72, Sensitivity Test	Upload/Download to PC computer
8)	System Status Reports	Verification Counters
9)	Security Monitor Points	Walk Test
10)	Alarm Verification	Maintenance Alert

3. Loop Interface Board (LIB):
   a. Loop interface boards shall be provided to monitor and control each of the Signaling Line Circuit (SLC) loops in the network node. The loop interface board shall contain its own microprocessor and shall be capable of operating in local mode in the case of a failure in the main CPU of the control panel. In local mode, the loop interface board shall detect alarms and activate output devices on its own SLC loop.
   b. The LIB shall not require any jumper cuts or address switch settings to initialize SLC Loop operations.
   c. The loop interface board shall provide power to, and communicate with, all of the intelligent detectors and addressable modules connected to its SLC Loop over a single pair of wires. This SLC Loop shall be capable of operation as NFPA Style 4, Style 6, or Style 7.
   d. The LIB shall be able to drive two Style 4 SLC loops, each up to 10,000 feet in length, for an effective loop span of 20,000 feet.
   e. The loop interface board shall receive analog information from all intelligent detectors and shall process this information to determine whether normal, alarm, or trouble conditions exist for that particular detector. The loop interface board software shall include software to automatically adjust and compensate for dust accumulation to maintain detector performance as it is affected by environmental factors. The analog information may also be used for automatic detector testing and for the automatic determination of detector maintenance requirements.
   f. The LIB shall communicate with each intelligent addressable detector and addressable module on its SLC loop and verify proper device function and status. Communication with up to 198 intelligent devices shall be performed every 6 seconds or less.
4. Enclosures:
   a. Control panels shall be housed in UL listed cabinets suitable for semi-flush mounting. Cabinets shall be corrosion protected, given a rust-resistant prime coat, and the manufacturer's standard finish.
   b. The back box and door shall be constructed of .060 steel with provisions for electrical conduit connections into the sides and top.
   c. The door shall provide a key lock and include a transparent opening for viewing all indicators. For convenience, the door shall have the ability to be hinged on either the right or left-hand side.
   d. The control unit shall be modular in structure for ease of installation, maintenance, and future expansion.
5. FACP nodes shall be designed so that it permits continued local operation of remote transponders under both normal and abnormal network communication loop conditions. This shall be obtained by having transponders operate as local control panels upon loss of network communication.
6. FACP nodes shall be modular in construction to allow ease of servicing. Each CPU and transponder shall be capable of being programmed on site without requiring the use of any external programming equipment. Systems, which require use of external programmers or change of EPROMs are not acceptable.

7. The CPU and associated equipment are to be protected so that they will not be affected by voltage surges or line transients including RFI and EMI.
8. FACP Power Supplies:
   a. Main power supplies shall operate on 120 VAC, 60Hz, and shall provide all necessary power for the FACP.
   b. Each main supply shall provide 3.0 amps of usable notification appliance power, using a switching 24 VDC regulator.
   c. The main power supply shall be expandable for additional notification appliance power in 3.0 ampere steps.
   d. Each main power supply shall provide a battery charger for 60 hours of standby using dual-rate charging techniques for fast battery recharge. It shall charge 55 Amp hour batteries with-in a 48 hour period.
   e. The supply shall provide a very low frequency sweep earth detect circuit, capable of detecting earth faults on sensitive addressable modules.
   f. It shall provide meters to indicate battery voltage and charging current.
   g. The main power supply shall be power-limited per 1995 UL864 requirements.
9. System Circuit Supervision:
   a. Each FACP node shall supervise all circuits to intelligent devices, transponders, annunciators and peripheral equipment and annunciate loss of communications with these devices. The FACP CPU shall continuously scan the above devices for proper system operation and upon loss of response from a device shall sound an audible trouble, indicate which device or devices are not responding and print the information on the printer.
   b. Sprinkler system valves, standpipe control valves, PIV, and main gate valves shall be supervised for off-normal position.
10. Field Wiring Terminal Blocks: For ease of service, all wiring terminal blocks shall be the plug-in type and have sufficient capacity for 18 to 12 AWG wire. Fixed terminal blocks are not acceptable.
11. Operators Terminal: Provide the following functions in addition to any other functions required for the system.
   a. Acknowledge (ACK/STEP) Switch:
      1) Activation of the control panel Acknowledge switch in response to a single new Alarm and/or trouble condition shall silence the local panel piezo electric signal and change the system alarm or trouble LED from flashing mode to steady-ON mode. If additional new alarm or trouble conditions exist or are detected and reported in the system, depression of this switch shall advance the 80-character LCD display to the next alarm or trouble condition.
      2) Depressing the acknowledge switch shall also silence all remote annunciator piezo sounders.

b. Signal Silence Switch: Activation of the signal silence switch shall cause all programmed alarm notification appliances and relays to return to the normal condition after an alarm activation. The selection of notification circuits and relays which are silence able by this switch shall be fully field programmable within the confines of all applicable standards.

c. System Reset Switch: Activation of the system reset switch shall cause all local electronically-latched initiating devices, software zones, output devices and circuits, to return to their normal condition.

d. If an alarm condition(s) still exists, or if they reoccur in the system after system reset switch activation, the system shall then resound the alarm conditions.

e. System Test Switch: Activation of the system test switch shall initiate an automatic test of all intelligent/addressable detectors in the local system. The system test shall activate the electronics in each intelligent sensor, simulating an alarm condition and causing the transmission of the alarm condition from that sensor to the fire alarm control panel. The fire alarm control panel shall interpret the data from each sensor installed in the system. A report summarizing the results of this test shall be displayed automatically on the system LCD and on any CRTs or printers in the system.

f. Lamp Test Switch: Activation of the lamp test switch shall sequentially turn on all LED indicators, system liquid crystal display and local piezo signal, and then automatically return the fire alarm control panel to the previous condition.

12. Field Programming:

a. The system shall be programmable, configurable and expandable in the field without the need for special tools or electronic equipment and shall not require field replacement of electronic integrated circuits.

b. All local FACP node programming shall be accomplished through the FACP keyboard or through the video display terminal.

c. All field defined programs shall be stored in non-volatile memory.

d. The programming function shall be enabled with a password that may be defined specifically for the system when it is installed. Two levels of password protection shall be provided in addition to a key-lock cabinet. One level is used for status level changes such as zone disable or manual on/off commands. A second (higher-level) is used for actual change of program information.

13. Specific System Operations:

a. Smoke Detector Sensitivity Adjust: Means shall be provided for adjusting the sensitivity of any or all analog intelligent detectors in the FACP node from each system keypad or from the keyboard of the video terminal. Sensitivity range shall be within allowed UL limits.

b. Alarm Verification: Each of the intelligent addressable detectors in the system may be independently selected and enabled for alarm verification. Each FACP shall keep a count of the number of times each detector has entered the verification cycle. These counters may be displayed and reset by the proper operator commands.

c. System Point Operations:

1) All devices in the FACP node may be enabled or disabled through the local keypad or video terminal.
2) Any FACP node output point may be turned on or off from the local system keypad or the video terminal.

d. Point Read: The FACP node shall be able to display the following point status diagnostic functions without the need for peripheral equipment. Each point will be annunciated for the parameters listed:
   1) Device Status
   2) Device Type
   3) Custom Device Label
   4) Software Zone Label
   5) Device Zone Assignments
   6) Detector Analog Value
   7) All Program Parameters

e. System Status Reports: Upon command from a password-authorized operator of the system, a status report will be generated, and printed, listing all local FACP system status.

f. System History Recording and Reporting: Each FACP node shall contain a history buffer that shall be capable of storing a minimum of 400 system events. Each local activation will be stored and time and date stamped with the actual time of the activation, until an operator requests that the contents be either displayed or printed. The contents of the history buffer may be manually reviewed, one event at a time, and the actual number of activations may also be displayed and or printed.
   1) The history buffer shall use non-volatile memory. Systems which use volatile memory for history storage are not acceptable.

g. Automatic Detector Maintenance Alert: Each FACP node shall automatically interrogate each intelligent system detector and shall analyze the detector responses over a period of time.
   1) If any intelligent detector in the system responds with a reading that is below or above normal limits, then the system will enter the trouble mode, and the particular intelligent detector will be annunciated on the system display, network display and printed on the optional system printer. This feature shall in no way inhibit the receipt of alarm conditions in the system, nor shall it require any special hardware, special tools or computer expertise to perform.

14. System Printer

a. The system printer shall be an external printer with associated printer stand. Printer stand shall be capable of holding paper stock and shall provide a holding area for printouts.

b. The printer shall continue to operate from building emergency power or fire alarm system standby batteries in the event of main power loss.

c. The printer shall record all system events including operator commands and shall be capable of providing a printed list of system conditions such as detector sensitivities, thresholds, analog voltages, device type, and custom message. The printer shall automatically perform a self test every 24 hours. A trouble condition shall be generated when printer paper has run out. An internal buffer shall continue to store events when paper is out.

d. The printer shall have at least 80 characters per line and capable of printing at 120 characters per second.

H. FIRE ALARM SMOKE CONTROL SYSTEM

1. General

a. Provide a smoke control system that is UL 864 (UUKL product category) listed for a smoke control system service and meets requirements of NFPA 92A. The fire alarm smoke control system shall consist of a Dedicated Smoke Control System.

b. The smoke control system shall comprise of a smoke control panel, relays, monitor modules and control modules as required.

c. Provide control of and monitoring of status/operation of all HVAC components required for the fire alarm smoke control system. Provide monitor modules and control modules for each fan or damper to be controlled by the smoke control system and provide smoke control relays in a cabinet within 3 feet of each smoke exhaust fan controller, make-up air fan controller, air handling unit controller, and damper to be controlled by the smoke control system. The building automation/HVAC controls system contractor shall terminate the relays to the fan controllers, air handling controllers, and dampers. The fire alarm installer shall terminate the modules to status indicators.

2. Fire Alarm Smoke Control Panel

a. Provide a Fire Alarm Smoke Control Panel that shall be UUKL and UL 864 listed for smoke control systems. The Panel shall include all necessary drivers and accessories to provide visual LED indicating lights and HOA controls on a front graphic display to indicate the status for all smoke control equipment in elevation view depicting the building arrangement, ductwork, airflow direction of all smoke controlled stairwells, smoke vestibules, and the fire command center location.

b. An uninterruptable power supply shall be supplied wo that the control panel does not loose power in the event of building power failure.

c. The LED indicating lights shall illustrate:

1) Smoke control fan NOT at end of run start (ramp acceleration) status shall be indicated by a RED LED

d. Smoke control fan at end of run start (ramp acceleration) status shall be indicated by a GREEN LED

e. Smoke control dampers in the fully open position shall be indicated by a GREEN LED.

f. Sail switches activated via fan air flow in the ductwork shall be indicated by a GREEN LED.

g. Smoke control fan soft start controllers fault conditions, roof fan disconnects in open position, any HOA switches in the OFF position, damper failure to open within 20 seconds and/ or SLC fault conditions in fault status shall be indicated by a YELLOW LED.

h. All equipment in normal status shall be illuminated with a WHITE LED.

i. Provide a toggle or push-button switch to test all LED indicator lights mounted on the panel front cover. The test switch shall not require key operation.

j. Provide HOA switches labeled "ON-AUTO-OFF" on the Fire Alarm Smoke Control Panel to permit fire-fighters manual control of each individual smoke control fan only after the fire fighter key operated MASTER KEY “AUTO-MANUAL OVER-RIDE” is activated to the MANUAL OVER-RIDE position. The HOA switches shall default to the AUTO mode regardless of the HOA switch position when the “AUTO-MANUAL OVER-RIDE” is locked into the AUTO position.

k. The panel shall include audible signal that sounds when smoke control is in alarm or a fault is indicated, with a momentary audible silence button (on the front cover) only active when the master key is in the MANUAL OVER-RIDE position.

l. All building names, floor numbers, room names and stairwell number nomenclature shall be consistent with all final permanent signage approved by the Owner and the Architect PRIOR to equipment fabrication.

m. Refer to the drawings for Fire Alarm Smoke Control Panel front cover graphics illustration to be used as the initial basis, modified as required and submitted to AHJ for review and approval prior to submitting the Architect as a submittal review.

n. The Fire Alarm Smoke Control Panel cabinet and trim finish to match the Fire Alarm Control Units. The graphic background shall be white, building arrangement in black and smoke control systems depicted in manufacturer recommended colors commonly used. The locking cover/display assembly shall be hinged on the left. Key and lock shall be common to all secured fire alarm system enclosures.

o. Accpetance testing will take place prior to the certificate of occupancy is obtained. Acceptance testing will require a test of the integrated smoke control system to confirm compliance with the design specifications and proper operation.

I. Addressable Devices – General:

1. Addressable devices shall use simple to install and maintain decade (numbered 1 to 10) type address switches.

2. Addressable devices which use a binary address setting method, such as a Dip switch, are difficult to install and subject to installation error. This type of device is not an allowable substitute.

3. Detectors shall be intelligent (analog) and addressable, and shall connect with two wires to the FACP signaling line circuit.

4. Addressable smoke and thermal detectors shall provide dual alarm and power/polling LEDs. Both LEDs shall flash under normal conditions, indicating that the detector is operational and in regular communication with the control panel, and both LEDs shall be placed into steady illumination by the control panel, indicating that an alarm condition has been detected. If required, the LED flash shall have the ability to be removed from the system program. An output connection shall also be provided in the base to connect an external remote alarm LED.
5. Smoke detector sensitivity shall be set in the fire alarm control panel and shall be adjustable in the field through the field programming of the system. Sensitivity may be automatically adjusted by the panel on a time-of-day basis.
6. Using software in the FACP, detectors shall automatically compensate for dust accumulation and other slow environmental changes that may affect their performance. The detectors shall be listed by UL as meeting the calibrated sensitivity test requirements of NFPA Standard 72, Chapter 7.
7. The detectors shall be ceiling-mount and shall include a separate twist-lock base with tamper proof feature. Base shall include a sounder base with a built-in (local) sounder rated at 85 DBA minimum, a relay base and an isolator base designed for Class A applications.
8. The detectors shall provide a test means whereby they will simulate an alarm condition and report that condition to the control panel. Such a test may be initiated at the detector itself (by activating a magnetic switch) or initiated remotely on command from the control panel.
9. Detectors shall also store an internal identifying type code that the control panel shall use to identify the type of device (ION, PHOTO, THERMAL).
10. Detectors will operate in an analog fashion, where the detector simply measures its designed environment variable and transmits an analog value to the FACP based on real-time measured values. The FACP software, not the detector, shall make the alarm/normal decision, thereby allowing the sensitivity of each detector to be set in the FACP program and allowing the system operator to view the current analog value of each detector.
11. A magnetic test switch shall be provided to test each detector for 100 percent obscuration, reported to the FACP.
12. Addressable devices shall provide address-setting means using decimal switches and shall also store an internal identifying code that the control panel shall use to identify the type of device. LED(s) shall be provided that shall flash under normal conditions, indicating that the device is operational and is in regular communication with the control panel.
13. A magnetic test switch shall be provided to test detectors and modules. Detectors shall report an indication of an analog value reaching 100 percent of the alarm threshold.

J. Addressable Pull Box (Manual Station):

1. Addressable pull boxes shall, on command from the control panel, send data to the panel representing the state of the manual switch and the addressable communication module status. They shall use a key operated test-reset lock, and shall be designed so that after actual emergency operation, they cannot be restored to normal use except by the use of a key. Manual pull stations shall be of the double action type.
2. All operated stations shall have a positive, visual indication of operation and utilize a key type reset.
3. Manual stations shall be constructed of Lexan with clearly visible operating instructions provided on the cover. The word FIRE shall appear on the front of the stations in raised letters, 1.75 inches or larger.
4. Stations shall be suitable for surface mounting or semiflush mounting as shown on the plans, and shall be installed not less than 42 inches, nor more than 48 inches above the finished floor. Stations shall be provided with stopper covers.

K. Intelligent Photoelectric Smoke Detector:

1. The detectors shall use the photoelectric (light-scattering) principal to measure smoke density and shall, on command from the control panel, send data to the panel representing the analog level of smoke density.

L. Intelligent Thermal Detectors:

1. Thermal detectors shall be intelligent addressable devices rated at 135 degrees Fahrenheit (58 degrees C) and have a rate-of-rise element rated at 15 degrees F (9.4 degrees C) per minute. It shall connect via two wires to the fire alarm control panel signaling line circuit. Up to 99 intelligent heat detectors may connect to one SLC loop.

M. Intelligent Duct Smoke Detector:

1. The in-duct smoke detector housing shall accommodate either an intelligent ionization detector or an intelligent photoelectric detector, of that provides continuous analog monitoring and alarm verification from the panel.
2. When sufficient smoke is sensed, an alarm signal is initiated at the FACP, and appropriate action taken to change over air handling systems to help prevent the rapid distribution of toxic smoke and fire gases throughout the areas served by the duct system.
3. Label all concealed duct smoke locations with a red phenolic label on ceiling.
4. Provide remote test stations for all duct smokes.

N. Addressable Dry Contact Monitor Module:

1. Addressable monitor modules shall be provided to connect one supervised IDC zone of conventional alarm initiating devices (any N.O. dry contact device) to one of the fire alarm control panel SLC loops.
2. The monitor module shall mount in a 4-inch square, 2-1/8 inch deep electrical box.
3. The IDC zone may be wired for Style D or Style B operation. An LED shall be provided that shall flash under normal conditions, indicating that the monitor module is operational and in regular communication with the control panel.

4. For difficult to reach areas, the monitor module shall be available in a miniature package and shall be no larger than 2-3/4 inch x 1-1/4 inch x 1/2 inch. This version need not include Style D or an LED.

O. Two Wire Detector Monitor Module:

1. Addressable monitor modules shall be provided to connect one supervised IDC zone of conventional 2-wire smoke detectors or alarm initiating devices (any N.O. dry contact device).
2. The two-wire monitor module shall mount in a 4 in. square, 2-1/8 in. deep electrical box or with an optional surface backbox.
3. The IDC zone may be wired for Class A or B (Style D or Style B) operation. An LED shall be provided that shall flash under normal conditions, indicating that the monitor module is operational and in regular communication with the control panel.

P. Addressable Control Module:

1. Addressable control modules shall be provided to supervise and control the operation of one conventional NACs of compatible, 24 VDC powered, polarized audio/visual notification appliances. For fan shutdown and other auxiliary control functions, the control module may be set to operate as a dry contract relay.
2. The control module shall mount in a standard 4-inch square, 2-1/8 inch deep electrical box, or to a surface mounted backbox.
3. The control module NAC may be wired for Style Z or Style Y (Class A/B) with up to 1 amp of inductive A/V signal, or 2 amps of resistive A/V signal operation, or as a dry contact (Form-C) relay. The relay coil shall be magnetically latched to reduce wiring connection requirements, and to insure that 100 percent of all auxiliary relay or NACs may be energized at the same time on the same pair of wires.
4. Audio/visual power shall be provided by a separate supervised power loop from the main fire alarm control panel or from a supervised, UL listed remote power supply.
5. The control module shall be suitable for pilot duty applications and rated for a minimum of .6 amps at 30 VDC.

Q. Isolator Module:

1. Isolator modules shall be provided to automatically isolate wire-to-wire short circuits on an SLC loop. The isolator module shall limit the number of modules or detectors that may be rendered inoperative by a short circuit fault on the SLC Loop. At least one isolator module shall be provided for each floor or protected zone of the building.
2. If a wire-to-wire short occurs, the isolator module shall automatically open-circuit (disconnect) the SLC loop. When the short circuit condition is corrected, the isolator module shall automatically reconnect the isolated section.
3. The isolator module shall not require any address-setting, and its operations shall be totally automatic. It shall not be necessary to replace or reset an isolator module after its normal operation.
4. The isolator module shall mount in a standard 4-inch deep electrical box or in a surface mounted backbox. It shall provide a single LED that shall flash to

indicate that the isolator is operational and shall illuminate steadily to indicate that a short circuit condition has been detected and isolated.

R. Combustible Gas Detector (CH4)

1. Wall or duct-mounted gas detector for monitoring methane (CH4) installed as a standalone device with single-gas monitoring.
   a. Size 20.56 x 14.90 x 6.72cm (8.09 x 5.87 x 2.65") (H x W x D); Remote Sensor: 3.5 x 4.5 x 6.5 cm (1.36 x 1.75 x 2.56")
   b. Power Requirement 24 Vac nominal (17-27Vac), 50/60 Hz, 0.35 A; 24Vdc nominal (20-38Vdc); with remote sensor: 7 W max.
   c. Optional Main AC Input 120Vac nominal, ± 10% (with on-board transformer)
   d. Relay Output 2 DPDT relays, 5A @ 250Vac; 5A @ 30Vdc
   e. Communications 4-20mA
   f. Operating Environment Commercial, Indoor, Extreme Temperature Environments Operating Temperature H2S, NO2, O2, CH4, H2, C3H8: -40 to 50ºC (-40 to 122ºF) CO: -20 to 50ºC (-4 to 122ºF)
   g. Sensor Type Electrochemical cell (CO, NO2, H2S, O2); catalytic (CH4, H2, C3H8,)
   h. Response Time T90 < 50 seconds With ECLAB T90 < 240 seconds
   i. Display 8 character, 2 line backlit LCD
   j. Visual Indicators Green LED: Power Amber LED 1: Alarm/Fault Amber LED 2: Alarm/Fault
   k. Audible Alarm >85 dBA at 3 m (10 ft)
   l. Accuracy ± 3% of full scale @ 25ºC
   m. Enclosure Polycarbonate
   n. Certification CSA C22.2 No. 61010-1, UL 61010-1; FCC part 15; ICES-003 issue 4; ISO 9001-2008
2. Provide monitor module for each gas detector.

S. Carbon Monoxide Detector

1. Provide CO detector where indicated on drawing. Signal shall be supervisory to central station and identified as "CO Detector". The CO sensor base shall have removable CO element that can either work independently as a toxic gas detector or be combined with a photo or heat sensor to provide a method to reduce unnecessary alarms from common sources such as steam from showers, aerosols from personal care products, cooking materials, dust and exhaust fumes. The CO sensor base does not require a separate device be mounted onth wall or ceiling.
2. Certifications:
   a. OSHA compliant CO gas sensing: CO condition level may be programmed by concentration to affect ventilation control.
   b. UL listed – for both UL 2034 and 2075 applications.
   c. Extended Life Span – 10 years of service.

T. Duct mounted carbon monoxide detector:

1. Manufactured by Air Products and Controls Model SL-701 or Equal
2. Product Specifications

Voltages available:	230VAC, 115VAC, 24VAC, 24VDC
APPROVALS	Electrochemical Carbon Monoxide Sensor is a UL Recognized component in accordance with the requirements of UL2034. Also meets EN50291 requirements. SL-2000 Series Duct Smoke Detector Fire Alarm Certifications referenced side one: UL & CUL Listed (UL268A, UROX, UROX7) File # S2829 CSFM Listed (3240-1004:105); MEA Accepted (73-92-E, VOL. 27)
SAMPLING TUBES Provide required length for duct coordinate with HVAC drawings	Sectional sampling tube Metal sampling tube for 6” to 2.5’ duct width Metal sampling tube for 2.5’ to 5.0’ duct width Metal sampling tube for 5.0’ to 10.0’ duct width
ACCESSORIES	MSR-50/CO remote accessory TG-701 aerosol test gas T-PB power supplies WP-2000 weatherproof enclosure (All available from Air Products and Controls Inc.)

POWER REQUIREMENTS	Input Power	Standby Current	Alarm Current
	24VAC	55mA	190mA
	24VDC	14mA	68mA
	115VAC	22mA	32mA
	230VAC	12mA	18mA

RELAY CONTACT RATING:

Alarm Contacts	Resistive load: 2 sets form “C” rated at 10 Amps @ 115VAC Resistive load: 1 set form “A” rated at 2 Amps
Trouble Contacts	Resistive load: 1 set form “C” rated at 10 Amps @ 115VAC

AIR VELOCITY	100 to 4,000 ft. /min.
AMBIENT TEMPERATURE	32ºF to 158ºF (0ºC to 70ºC)
HUMIDITY	10% to 85% RH Non-Condensing / Non-Freezing
WIRING	Solid or stranded: #12 to #22 AWG terminals
MATERIAL	Grey plastic back box, clear plastic cover (Makrolon 94V-0) Do not expose to corrosive atmospheres.
DIMENSIONS	13 ½” L x 4 ½” W x 2 ¼” D
MAX. NET WT.:	2 ½ lbs.
HARDWARE	7” exhaust tube, FAST Tube starter sampling tube, sampling tube end cap, mounting template, and mounting hardware included.

U. LCD Alphanumeric Display Annunciator:

1. The alphanumeric display annunciator shall be a supervised, back-lit LCD display containing a minimum of 80 characters for alarm annunciation in clear English text.
2. The LCD annunciator shall display all alarm and trouble conditions from either the network node or complete network, via the INA.
3. Up to 32 LCD annunciators may be connected to a specific (terminal mode) EIA 485 interface. LCD annunciators shall not reduce the annunciation capacity of the system. Each LCD shall include vital system wide functions such as, system acknowledge, silence and reset.
4. LCD display annunciators shall mimic the local control panel 80 character display or network annunciator and shall not require special programming.
5. Annunciator shall provide all functions of the FACP. Provide a hand held microphone in the annunciator cabinet.

V. Batteries and External Charger:

1. Battery:
   a. Batteries shall be 12 volt, Gell-Cell type.
   b. The battery shall have sufficient capacity to power the fire alarm system for not less than 60 hours plus 10 minutes of alarm upon a normal AC power failure. Submit calculations of selected battery to Engineer for review.
   c. The batteries are to be completely maintenance free. No liquids are required. Fluid level checks for refilling, spills and leakage shall not be required.

W. Addressable Speaker/Strobe Units for Fire and Mass Notification application:

1. The audible notification appliance network consists of addressable Hi-fidelity speakers located to provide intelligible instructions at areas as indicated. Several areas are identified as acoutsically distinguishable spaces Refer to the design documets for the locations and requirements of such spaces.
   a. Acoutsically Distinguishable Spaces include: Corridors, Offices, Classrooms, Conference rooms, nurses area, Administrative areas, Band Room, Athletic department area,
2. The Mass Notification System announcements shall take priority over all other audible announcements of the system including the output of the fire alarm system in a normal or alarm state. When a mass notification announcement is activated during a fire alarm, all fire alarm system functions shall continue in an alarm state except for the output signals of the fire alarm audible and visual notification appliances.

3. One-way Tone/Voice Communication:
   a. The evacuation alarm and alert signals shall be capable of being initiated automatically from the fire alarm control panel (FACP) and transmitted to any speaker circuit, selected speaker circuits or all speaker circuits.
   b. The alarm signal, alert signal and live and pre-recorded voice announcements shall be capable of manual transmission from the FACP to any speaker circuit, selected speaker circuits or all speaker circuits by manual selection of the associated speaker circuit control switches.
   c. Live voice announcements, via the hand-held microphone or patched in external source, by use of speaker control switches, shall take priority over all previously activated alarm inputs. In addition to NFPA 72 requirements, the system shall be capable of priority live voice announcements over subsequent alarm conditions. In no case shall subsequent alarms disrupt emergency live voice announcements. Mass notification activation is the only condition allowed to override the fire alarm event.
   d. Alarm speaker amplification equipment shall be sized, at 1 watt for every speaker location shown.
   e. All Speakers shall be high fidelity 200Hz to 1000Hz.
   f. As a minimum, alarm speaker amplification equipment shall be sized to provide the above indicated wattage of input power to each location type of alarm speaker shown on the Drawings, plus 20 percent (20 percent) spare capacity to permit the addition of future alarm speakers. Include one back up amplifier for every 100 watts of primary power supplied.
   g. Within the individual assembly occupancies in this project, an alarm received during a program occupancy shall sound an alert alarm at a constantly attended location and perform the following actions:
   h. Deliver a field programmable, digitized custom evacuation message to the occupants, detailing evacuation instructions.
   i. A simultaneous message shall be delivered via all alarm speakers installed in remainder of the building directing evacuation using exits other than the assembly occupancy exit path.
   j. Perform all control functions as detailed elsewhere in this specification
   k. An automatic announcement or tone evacuation signal shall be capable of interruption by the operation of the system microphone to give voice evacuation instructions overriding the pre-programmed sequences

X. Addressable Visual Unit (Xenon Strobe) and Visual/Fire/MNS unit:
   1. Combination white/amber strobe/MNS units - Provide Truealert Synchronized white strobe (fire)/yellow strobe (MNS event) all in one unit. Unit shall be red with “FIRE” in white lettering. Yellow strobe shall include “ALERT” in white lettering.
   2. Provide candela rating indicated on drawings and in accordance with NFPA requirements.
   3. Adjacent to all combination visual units shown on drawings provide an addressable speaker
   4. Systems that require separate wiring and control modules to support the specified functionality shall be provided at no additional cost.

Y. Mass Notification Local Operator Console:

1. Local Operator Console is designed for indoor use with the Autocall 4100ES control panel for mass notification applications. The LOC shall contain an InfoAlarm Command Center with LCD display. The LOC shall only have MNS fuctionality. Fire Alarm controls, resets, acknowledge, silence functions are not permissible. In addition to the switches and controls provided inherently with the Command Center, Provide an additional eight black push on/push off illuminated push buttons for speaker circuit selection, 8 illuminated push buttons for message selection, and a microphone for live messages. The speaker circuits shall be fully user defined and not be contingent on circuit wiring. Circuits shall be defined through system software. Controls shall be installed in a cabinet with glass door and magnetic lock. Panel shall be labeled “Emergency Communications”. The controls shall be fully replicated at the main FACP in the event that office personnel are unable to initiate emergency messages. LOC’s shall also have a minimum of 24 input points for remote panic button annunciation and control.
   a. Standard features:
      1) 24I/O Module
      2) 16 illuminated push buttons
      3) Magnetic latch
      4) 16.5 in. w x 12.63 in. h x 4 in. d 16 ga CRS enclosure
      5) Indoor, surface or semi-flush mount
      6) Platinum powder coat finish with white silk screened lettering
2. Remote Microphone Assembly (mounted in LOC)
   a. The remote microphone assembly uses power from the panel of the LED. All other interfaces do not draw any additional power other than what is already accounted for on the host interface, which is used for supervising the keyswitch, push-to-talk (PTT), and microphone wiring.
3. Operating Voltage
   a. 24V as provided by 4100ES or 24 Point I/O Module.
   b. 24V battery current drawing - 25mA max.
4. Environmental Operating Rang
   a. 32 deg. F to 120 deg. F (0 deg. C to 49 deg. C)
   b. 90 deg. (32 deg. C) at 10 percent to 93 percent relative humidity (non-condensing).
5. LOC's shall be programmed to allow only one LOC to be available for page or messaging at a time. Once one LOC becomes active, all other LOC's will have an indication that the system is busy (Amber Busy Light)and cannot be used at that time. This is to avoid two messages being given at the same time. Also, it must be possible to override or lockout the LOC's from the Master Command Panel (in accordance with NFPA 72.)

Z. Addressable Textual Notification Appliance (MNS): Textual Notification Appliance is to operate on a compatible Signaling Line Circuit (SLC) and is to provide a high visibility, multi-color LED text message display.

1. Textual Notification Appliance shall be Listed to UL 1638 Visual Signaling Appliances.

2. Appliance shall be capable of up to thirty two (32) pre-programmed message selections that can be activated in response to pre-defined emergency situations or linked to specific system point status conditions.
3. Textual Notification Appliance shall be capable of displaying dual or single line emergency instructions. Instructions can show as static, flashing, or scrolling with a variety of appearance/transition options. Instructions shall be capable of displaying using multi-colors to emphasize instructions content.
4. Textual Notification Appliance shall be capable of providing non-emergency information during non-emergency conditions. Emergency conditions will override non-emergency message/instructions and display emergency instructions.
5. Textual Notification Appliance shall be capable of scrolling instructions of at least 512 characters in length.
6. Textual Notification Appliance shall be viewable from a distance of 100 feet.
7. Textual Notification Appliance shall be powered by the fire alarm MNS power supply at 24VDC with battery back-up included if system battery calculations.
8. Textual Notification Appliance shall be capable of wall or ceiling mounting options.
9. Accessories: The contractor shall furnish the necessary accessories.

AA. Digital Communicator:

1. Provide UL listed digital communicator to transmit signal to fire department via two (2) dedicated telephone lines. Provide CAT 5 telephone cable in ¾”C to telephone demarcation backboard.

BB. Local Energy Masterbox:

1. The Master fire alarm box protecting the building shall be located at the main entrance on the outside of the building.
2. Master box shall be flush mounted Gamewell local energy type M-34-92. Coordinate keying, cutting of the break wheel with the fire dept.
3. All cable containing Municipal Fire Alarm circuits inside a building shall be enclosed in Rigid Metal Conduit. All couplings & pull boxes for this cable shall be painted red. A red two (2”) inch wide Stripe shall be placed on this conduit every ten (10) feet. The covers of the boxes shall be labeled “MUNICIPAL FIRE ALARM CIRCUIT”.
4. The Master Fire Alarm Box trip circuit shall be supervised and its status shall be annunciated at the center control unit and through the system trouble indication at the remote annunciation.
5. A suitable three (3) electrode gas type lightning arrestor shall be located in the Master Fire Alarm Box and properly grounded. (TII-317 B Type)
6. Box grounding shall be accomplished with not less than an eight (8) Foot Ground Rod 5/8” diameter installed as close to box as possible using a green #8 AWG and terminating with an ACORN lug on ground rod. A ground strap will be installed between the ground connection and the shell of the box.

7. With the approval of the Director of Signals & Lighting, a ground connection shall be installed from the ground terminal of the Master Fire Alarm Box to the grounding electrode system of the building, using a green #8 AWG wire minimum. A ground strap will also be installed between the ground connection and the shell of the box.
8. Cable for underground service shall meet the requirements I.M.S.A. specification 20-5 4 - Conductor #14 AWG solid copper.
9. A minimum of one (2") inch Schedule – 40 PVC pipe shall be installed as directed by the Director of Signals & Lighting.
10. On underground duct that terminates at a utility pole, the owner shall install rigid metal conduit
11. The Signals & Lighting Division will make final connections.

CC. Exterior Strobe-unit:

1. Provide wall mounted, 24 VDL strobe, color red with WRR wall bracket.

DD. Provide clear plastic covers without local audible alarm for pull stations in gym. Provide clear plastic covers with audible at all other Manual Pull stations.

EE. Magnetic Door Holders:

1. Provide under hardware Section 087100 and installed and wired by Electrical Contractor.

FF. Key Repository Box:

1. Provide a key repository box (es) in accordance with fire department requirements.

GG. Graphic Map: Provide graphic map to the fire department and engineer for review and approval.

1. Graphic map shall show all initiation devices and control panel and othe control locations annunciator and key boxes. All devices shall be labelled, and all final room numbers shall be indicated. The map shall be installed behind a plexiglass enclosure along with a frame equal to spage age electronics GD graphic display frame.

HH. Field Quality Control

1. Manufacturer's Field Services: Provide services of a Fire Alarm Technicians with a minimum of eight years of experience (NICET Level IV) utilized to test and certify the installation of the fire alarm/mass notification devices, cabinets and panels. The Fire Alarm technicians testing the equipment shall be factory trained in the installation, adjustment, testing, and operation of the equipment specified herein and on the drawings.
2. Service personnel shall be qualified and experienced in the inspection, testing, and maintenance of fire alarm systems. Examples of qualified personnel shall be permitted to include, but shall not be limited to, individuals with the following qualifications:
   a. Factory trained and certified.
   b. National Institute for Certification in Engineering Technologies (NICET) fire alarm certified.

c. International Municipal Signal Association (IMSA) fire alarm certified.

d. Certified by a state or local authority.

e. Trained and qualified personnel employed by an organization listed by a national testing laboratory for the servicing of fire alarm systems.

3. Pretesting: Determine, through pretesting, the conformance of the system to the requirements of the Drawings and Specifications. Correct deficiencies observed in pretesting. Replace malfunctioning or damaged items with new and retest until satisfactory performance and conditions are achieved.

4. Final Test Notice: Provide a ten-day minimum notice in writing when the system is ready for final acceptance testing.

5. Minimum System Tests: Test the system according to the procedures outlined in NFPA 72. Provide 2 year service contract to perform NFPA 72 required testing.

6. Retesting: Correct deficiencies indicated by tests and completely retest work affected by such deficiencies. Verify by the system test that the total system meets the Specifications and complies with applicable standards.

7. Report of Tests and Inspections: Provide a written record of inspections, tests, and detailed test results in the form of a test log.

8. Provide a point list with address devices to be reviewed and approved by the fire department and engineer prior to programming the system.

9. Perform Db level testing prior to fire department test.

10. Intelligibility Tests:

a. Intelligibility testing of the System shall be accomplished in accordance with NFPA 72 for Voice Evacuation Systems and IEC 60268-16.

b. Following are the specific requirements for intelligibility tests:

1) Intelligibility Requirements: Verify intelligibility by measurement after installation.

2) Ensure that a CIS value greater than the required minimum value is provided in each area where building occupants typically could be found. The minimum required value for CIS is .8. Rounding is permitted such that an intelligibility score of 0.75 may be rounded to 0.80. Acoustically Distinguishable Spaces (ADS) where passing intelligibility scores are not expected will be indicated on the drawings.

3) Areas of the building provided with hard wall and ceiling surfaces (such as metal or concrete) that are found to cause excessive sound reflections may be permitted to have a CIS score less than the minimum required value if approved by the Engineer and Architect, and if building occupants in these areas can determine that a voice signal is being broadcast and they must walk no more than 33 feet to find a location with at least the minimum required CIS value within the same area.

4) Areas of the building where occupants are not expected to be normally present are permitted to have a CIS score less than the minimum required value if personnel can determine that a voice signal is being broadcast and they must walk no more than 50 feet to a location with at least the minimum required CIS value within the same area.
5) Take measurements near the head level applicable for most personnel in the space under normal conditions (e.g., standing, sitting, sleeping, as appropriate).
6) The distance the occupant must walk to the location meeting the minimum required CIS value shall be measured on the floor or other walking surface as follows:

(1) Along the centerline of the natural path of travel, starting from any point subject to occupancy with less than the minimum required CIS value.

(2) Curving around any corners or obstructions, with a 12 inches clearance there from.

(3) Terminating directly below the location where the minimum required CIS value has been obtained.

d. Use commercially available test instrumentation to measure intelligibility as specified by ISO 7240-19 and ISO 7240-16 as applicable. Use the mean value of at least three readings to compute the intelligibility score at each test location.

e. Record and submit to the Engineer intelligibility scores prior to final test with authority having jurisdiction

11. Final Test, Certificate of Completion, and Certificate of Occupancy:

a. Test the entire system 100 percent devices in accordance with the Authority Having Jurisdiction in order to obtain a certificate of occupancy. Prior to that, and as a requisite, a separate test will be witnessed by the Engineer of Record.

12. Engage a factory-authorized service representative to train Owner's maintenance personnel and building supervisors to adjust, operate, utilize, troubleshoot, conduct software installation, and maintain the fire alarm control panel and fire command center. Provide eight (8) five hour training sessions for Owner’s personnel. Training shall be held on site in classroom. Manufacturer shall professionally video record training by Factory Personnel and provide media to Owner. Provide a hard copy of manuals, instructional videos, and recorded training session(s) on CD or DVD.

13. The smoke control system shall be programmed so that a self-test is automatically conducted by the fire alarm/smoke control system at a pre-determined time each week. The self-test must provide a printed report indicating the pass/fail of each equipment and overall system pass/fail status.

2.20 SURGE PROTECTION DEVICES

A. Scope

1. This section describes the materials and installation requirements for surge protective devices (SPD) for the protection of all main service and panelboards.

B. Submittals

1. Submit shop drawings and product information for approval and final documentation in the quantities listed according to the Conditions of the Contract. All transmittals shall be identified by customer name, customer location, and customer order number.
2. Submittals shall include UL 1449 3rd Edition Listing documentation verifiable by visiting www.UL.com, clicking “Certifications” link, searching using UL Category Code: VZCA and VZCA2:
   a. Short Circuit Current Rating (SCCR)
   b. Voltage Protection Ratings (VPRs) for all modes
   c. Maximum Continuous Operating Voltage rating (MCOV)
   d. I-nominal rating (I-n)
   e. SPD shall be UL listed and labeled as Type 1 or Type 4 intended for Type 1 or Type 2 applications
3. Upon request, an unencapsulated but complete SPD formally known as TVSS shall be presented for visual inspection.
4. Minimum of ten year warranty

C. Related Standards

1. IEEE C62.41.1, IEEE Guide on the Surge Environment in Low-Voltage (1000 V and Less) AC Power Circuits,
2. IEEE C62.41.2, IEEE Recommended Practice on Characterization of Surges in Low-Voltage (1000 V and Less) AC Power Circuits,
3. IEEE C62.45, IEEE Recommended Practice on Surge Testing for Equipment Connected to Low-Voltage (1000 V and Less) AC Power Circuits.
4. National Electrical Code: Article 285
5. UL 1283 - Electromagnetic Interference Filters
6. UL 1449, Third Edition, effective September 29, 2009 – Surge Protective Devices

D. Quality Assurance

1. Manufacturer Qualifications: Engage a firm with at least five years experience in manufacturing transient voltage surge suppressors.
2. Manufacturer shall be ISO 9001 or 9002 certified.
3. The manufacturer of this equipment shall have produced similar electrical equipment for a minimum period of ten years. When requested by the Engineer, an acceptable list of installations with similar equipment shall be provided demonstrating compliance with this requirement.

4. The SPD shall be compliant with the Restriction of Hazardous Substances (RoHS) Directive 2002/95/EC.

E. Delivery, Storage and Handling

1. Handle and store equipment in accordance with manufacturer's Installation and Maintenance Manuals. One copy of this document to be provided with the equipment at time of shipment.

F. Manufacturers

1. Provide an internally mounted Surge Protective Devices (SPD) formerly called Transient Voltage Suppressor (TVSS) by:
   a. Siemens Industry.
   b. Current Technology
   c. LEA
   d. Liebert
   e. APT
   f. Cutler Hammer
   g. Or equal

G. Electrical Distribution Equipment

1. Service Entrance
   a. SPD shall be UL 1449 labeled as Type 1 or Type 4 intended for Type 1 or Type 2 applications, verifiable at UL.com, without need for external or supplemental overcurrent controls. Every suppression component of every mode, including N-G, shall be protected by internal overcurrent and thermal overtemperature controls. SPDs relying upon external or supplementary installed safety disconnectors do not meet the intent of this specification.
   b. SPD shall be factory installed integral to electrical distribution equipment.
   c. SPD shall be UL labeled with 20kA I-nominal (I-n)
   d. SPD shall be UL labeled with 200kA Short Circuit Current Rating (SCCR).
   e. Standard 7 Mode Protection paths: SPD shall provide surge current paths for all modes of protection: L-N, L-G, L-L, and N-G for Wye systems; L-L, L-G in Delta and impedance grounded Wye systems.
   f. True 10 Mode Protection paths: SPD shall provide "directly connected protection elements" between all possible modes of protection: L-N, L-G, L-L, and N-G for Wye systems; L-L, L-G in Delta and impedance grounded Wye systems.
   g. SPD shall be connected external of the distribution equipment with an appropriately sized 200kA SCCR rated disconnect.
   h. SPD shall meet or exceed the following criteria:
      1) Maximum 7-Mode surge current capability shall be [300kA] [400kA] [500kA] per phase.
      2) Maximum 10-Mode surge current capability shall be [300kA] [450kA] per phase.

3) UL 1449 - Third Edition Revision; effective September 29, 2009 Voltage Protection Ratings shall not exceed the following:

VOLTAGE	L-N	L-G	N-G	L-L	MCOV
208Y/120	800V	800V	800V	1200V	150V
480Y/277	1200V	1200V	1200V	2000V	320V

i. UL 1449 Listed Maximum Continuous Operating Voltage (MCOV) (verifiable at UL.com):

System Voltage	Allowable System Voltage Fluctuation (percent)	MCOV
208Y/120	25 percent	150V
480Y/277	15 percent	320V

j. SPD shall incorporate a UL 1283 listed EMI/RFI filter with minimum attenuation of - 50dB at 100 kHz.

k. Suppression components shall be heavy duty ‘large block’ MOVs, each exceeding 30mm diameter.

l. SPD shall include a serviceable, replaceable module.

m. SPD shall be equipped with the following diagnostics:

1) Visual LED diagnostics including a minimum of one green LED indicator per phase, and one red service LED.
2) Audible alarm with on/off silence function and diagnostic test function (excluding branch).
3) Form C dry contacts
4) Optional – Surge Counter
5) No other test equipment shall be required for SPD monitoring or testing before or after installation.

n. SPD shall have a response time no greater than 1/2 nanosecond.

o. SPD shall have a 10 year warranty.

2. Distribution Panel

a. SPD shall be UL 1449 labeled as Type 4 intended for Type 1 or Type 2 applications, verifiable at UL.com, without need for external or supplemental overcurrent controls. Every suppression component of every mode, including N-G, shall be protected by internal overcurrent and thermal overtemperature controls. SPDs relying upon external or supplementary installed safety disconnectors do not meet the intent of this specification.

b. SPD shall be factory installed integral to electrical distribution equipment.

c. SPD shall be UL labeled with 20kA I-nominal (I-n)

d. SPD shall be UL labeled with 200kA Short Circuit Current Rating (SCCR).

e. Standard 7 Mode Protection paths: SPD shall provide surge current paths for all modes of protection: L-N, L-G, L-L, and N-G for Wye systems; L-L, L-G in Delta and impedance grounded Wye systems.

f. SPD shall be connected to the buss of the distribution equipment with an appropriately sized 200kA SCCR rated disconnect.

g. SPD shall meet or exceed the following criteria:
   1. Maximum 7-Mode surge current capability shall be 100kA per phase.
   2. Maximum 10-Mode surge current capability shall be 150kA per phase.
   3. UL 1449 - Third Edition Revision; effective September 29, 2009, Voltage Protection Ratings shall not exceed the following:

VOLTAGE	L-N	L-G	N-G	L-L	MCOV
208Y/120	800V	800V	800V	1200V	150V
480Y/277	1200V	1200V	1200V	2000V	320V

h. UL 1449 Listed Maximum Continuous Operating Voltage (MCOV) (verifiable at UL.com):

System Voltage	Allowable System Voltage Fluctuation (percent)	MCOV
208Y/120	25 percent	150V
480Y/277	15 percent	320V

i. SPD shall incorporate a UL 1283 listed EMI/RFI filter with minimum attenuation of - 50dB at 100 kHz.

j. Suppression components shall be heavy duty ‘large block’ MOVs, each exceeding 30mm diameter.

k. SPD shall include a serviceable, replaceable module.

l. SPD shall be equipped with the following diagnostics:
   1) Visual LED diagnostics including a minimum of one green LED indicator per phase, and one red service LED.
   2) Audible alarm with on/off silence function and diagnostic test function (excluding branch).
   3) Form C dry contacts
   4) Optional – Surge Counter
   5) No other test equipment shall be required for SPD monitoring or testing before or after installation.

m. SPD shall have a response time no greater than 1/2 nanosecond.

n. SPD shall have a ten year warranty.

3. Branch Panels

a. The panelboard shall be UL 67 Listed and the SPD shall be UL 1449 labeled as Type 1 or as Type 4 intended for Type 1 or Type 2 applications.

b. The unit shall be top or bottom feed according to requirements. A circuit directory shall be located inside the door.

c. SPD shall meet or exceed the following criteria:
   1) Maximum 7-Mode surge current capability shall be 100kA per phase.
   2) Maximum 10-Mode surge current capability shall be 150kA per phase.

3) UL 1449 - Third Edition Revision; effective September 29, 2009, Voltage Protection Ratings shall not exceed the following:

VOLTAGE	L-N	L-G	N-G	L-L	MCOV
208Y/120	800V	800V	800V	1200V	150V
480Y/277	1200V	1200V	1200V	2000V	320V

d. UL 1449 Listed Maximum Continuous Operating Voltage (MCOV) (verifiable at UL.com):

System Voltage	Allowable System Voltage Fluctuation (percent)	MCOV
208Y/120	25 percent	150V
480Y/347	15 percent	320V

e. SPD shall incorporate a UL 1283 listed EMI/RFI filter with minimum attenuation of - 50dB at 100 kHz.

f. Suppression components shall be heavy duty ‘large block’ MOVs, each exceeding 30mm diameter.

g. SPD shall include a serviceable, replaceable module.

h. SPD shall be equipped with the following diagnostics:
   1) Visual LED diagnostics including a minimum of one green LED indicator per phase, and one red service LED.
   2) Audible alarm with on/off silence function and diagnostic test function (excluding branch).
   3) Form C dry contacts
   4) Optional – Surge Counter
   5) No other test equipment shall be required for SPD monitoring or testing before or after installation.

i. SPD shall have a response time no greater than 1/2 nanosecond.

j. SPD shall have a 10 year warranty.

k. The unit shall have removable interior.

l. The main bus shall be copper and rated for the load current required.

m. The unit shall include a 200 percent rated neutral assembly with copper neutral bus.

n. The unit shall be provided with a safety ground bus.

o. The field connections to the panelboard shall be main lug or main breaker.

p. The unit shall be constructed with flush or surface mounted trim and shall be in a NEMA Type 1 enclosure.

H. Installation

1. Install per manufacturer’s recommendations and contract documents.

I. Adjustments and Cleaning

1. Remove debris from installation site and wipe dust and dirt from all components.
2. Repaint marred and scratched surfaces with touch up paint to match original finish.

J. Testing

1. Check tightness of all accessible mechanical and electrical connections to assure they are torqued to the minimum acceptable manufacture's recommendations.
2. Check all installed panels for proper grounding, fastening and alignment.

K. Warranty

1. Equipment manufacturer warrants that all goods supplied are free of non-conformities in workmanship and materials for one year from date of substantial completion operation.

2.21 LADDER TRAY/WIREWAYS

A. Provide aluminum ladder tray with 6 in. rung spacing with 4 in. side rail. Ladder tray shall be as manufactured by B-Line. "Ladder Type". Provide all hangers required. The width of the ladder tray shall be as indicated on drawings.

1. Acceptable Manufacturers:
   a. B-Line
   b. Chalfant
   c. Chatsworth
   d. PW Industries
   e. Or equal

B. Provide wireways for power and data where shown on drawings.

1. This specification covers NEMA type 1 wireway used to house ad protect communication cable. The wireway system shall consist of wireway and appropriate fittings to complete the installation per the electrical drawings.
2. Metal wireway (NEMA type 1) is to be utilized in dry interior locations only as covered in article 362 part a of the national electrical code, as adopted by the national fire protection association and as approved by the American National Standards Institute. The wiremold "c" or "sp" series is listed by underwriters' laboratories under file no. E137690 guide zoyx.
3. The wireway system specified herein shall be manufactured by the MP Husky. The size of the cable maximum of 40% fill is allowed.
   a. Acceptable Manufacturers:
      1) MP Husky
      2) Wiremold Company
      3) Hoffman
      4) Or equal
4. The wireway and all system components must be UL Listed in full compliance with their standard UL870, "electrical wireways, auxiliary gutters and associated fittings". It shall be manufactured from 16-gauge cold rolled steel, finished in ASA 61 gray powder coat paint. All sizes larger than 6 in. x 6 in. shall be manufactured from 14-gauge cold rolled steel, finished in ASA 61 gray powder coat paint. A factory installed divider shall be available to separate power and low voltage wring housed n the same wireway sections.

5. A full complement of fittings for the raceway shall be available including, but not limited to, 45° and 90° flat, vertical inside and outside elbows, tee and cross fittings, couplings for joining sections of wireway, reducers, hangers, end blanks, a field installed divider and all other components necessary to make the system workable. The fittings shall have an ASA 61 gray powder coat paint finish to match the wireway.
6. Prior to and during installation, refer to system layout drawing containing all elements of the system. Installer shall comply with detailed manufacturer's instruction sheets which accompany system components as well as complete system instruction sheets, whichever is applicable.
7. All wireway systems shall be mechanically continuous and connected to all electrical boxes and cabinets, in accordance with manufacturer's installation sheets.
8. All connections shall be checked to make sure they are correctly tightened and to insure that all wireway shall be electrically continuous and bonded in accordance with the national electric code for proper grounding.
9. All wireway systems shall be installed complete. Work shall include fastening all wireway and appropriate fittings to install a complete wireway system as indicated on the electrical and/or communication drawings and in the applicable specifications

2.22 SEALS

A. Water Tight Seals:

1. Conduits entering from the exterior or below grade shall have water tight fittings on the outside and on the inside of the conduit.
   a. Fittings on the outside of the conduit shall be O-Z Gedney type FSK or approved equal. Provide type WSK if penetration is within two feet of the high water table. Provide grounding attachment.
   b. Fittings on the inside of the conduit shall be O-Z Gedney type CSBI or approved equal. Provide type CSBG if penetration is within two feet of the high water table. Provide a blank fitting to seal spare or empty conduits.
   c. O-Z Gedney type CSM fitting may be used when sealing within a sleeve or cored hole.
2. Submit on seals to be used.

B. Environmental Seals:

1. Provide seals on raceways exposed to widely different temperatures, as in refrigerating or cold storage areas. Install seal to prevent circulation of air from warmer to colder sections through the raceway.

C. Hazardous Area Seals:

1. Provide explosion proof seals required by the Electric Code for the following areas.
   a. Explosion proof exhaust fans.

D. Smoke and Fire Stopping Seals:

1. All work shall be in accordance with the requirements of Section 078400.

2.23 UNDERGROUND DUCTBANKS

A. General: Furnish and install the ductbanks as herein specified and as shown on drawings.

B. Division of Work:

1. The General Contractor shall be responsible for the work and material required for the following:
   a. Excavation
   b. Backfill
   c. Installation of handholes/manholes
   d. Brick or concrete collars to bring handhole frames and covers up to grade. Installation of frames and collars which are to be furnished by the Electrical Subcontractor.
   e. Concrete Encasement
2. All other material, equipment, and labor required for the complete ductbank shall be furnished and installed by the Electrical Subcontractor under this Section, including the following:
   a. Service raceways.
   b. Grounding material.
   c. Ductbank warning tape.
   d. Furnishing pre-cast handholes/manholes.
   e. Conduit spacers.

C. Materials:

1. Conduit: UL listed, schedule 40 PVC in accordance with NEMA standard TC-2. See BASIC MATERIALS SECTION.
2. Conduit Supports (duct system): Shall be molded plastic with interlocking lugs and skeletonized structure, minimum separation 3 in.
3. Tags: Non-ferrous metal or fibre, 1/4 in. high letters.
4. Warning tape shall be yellow polyethylene 4 mil thick, 6 in. wide terratape, similar to REEF Industries, Houston, Texas and shall be installed above all ductbanks both high and low tension.
5. Installation of Underground nonmetallic raceways shall be in accordance with NEMA Standards Publication TCB-2-2017.

D. Duct System:

1. The duct system shall consist of Schedule 40 PVC conduit except where otherwise specified. The size and number of conduits shall be as indicated on the drawings. Provide a pull wire in each conduit.
2. The entire length between handholes and end of ductbank shall be excavated and graded before any conduit is laid.
3. The ductbank shall be set on undisturbed earth.
4. The conduit shall be installed so that top is a minimum of 36 in. below finished grade unless otherwise indicated, and shall be laid to a minimum grade of 4

in. for each 100 feet of length. Duct system shall drain to manholes/handholes.

5. Changes in direction shall be made by long sweep bends, minimum radius 25 feet except that at the end of a run, within ten feet of termination. Manufactured ends may be used having a minimum radius of 36 inches.
6. Conduit base and intermediate spacers shall be installed a maximum of 5 feet on centers. Spacers shall not be placed one above the other, but shall be staggered a minimum of 6 in..
7. All conduit joints shall be made watertight by means of a sealing compound before the coupling is installed. Joints in conduit shall be staggered, minimum space between joints in adjacent conduit shall be 6 inches.
8. When the required number of conduits have been installed, securely tie the assembly together at distances not exceeding 7 ft. Tie shall consist of three turns of No. 18 iron wire. Separate ties required for low tension and high tension conduit runs.
9. Duct envelope shall be vibrated to eliminate voids.
10. Ductbanks shall not be covered until the conduit installation has been observed by the utility company and Architect.
11. Warning tape shall be installed during backfilling and shall be placed approximately 12 in. above the conduits.
12. After the installation is completed, each conduit shall be cleaned and identified. A standard flexible mandrel and a stiff bristle brush shall be pulled through each conduit. The mandrel shall not be less than 12 in. long and the diameter approximately ¼ in. less than the conduit.

2.24 STANDBY ELECTRICAL SYSTEM

A. Summary

1. Work Included: Packaged natural gas engine driven electric plant including engine generator set, cooling system, fuel system, combustion air intake and engine exhaust systems, starting system, and the following additional features:
   a. Weatherproof and soundproof housing.
   b. Automatic load transfer control to provide automatic starting and stopping of the plant and switching of the load within 10 seconds.
   c. Automatic transfer switches
   d. Remote annunciator panel.
   e. 10’ exhaust stack for generators rated 300KW and above.
   f. Remote EPO mounted exterior to generator enclosure to stop prime mover.
2. Provide control and alarm circuits wiring as shown on the manufacturer’s diagrams and required for a complete installation.

3. Provide labor, materials, tools, equipment, transportation, insurance, temporary protection, supervision and incidental items which are usually provided with this equipment, or which are essential for proper installation and operation, even though not these may not be specifically mentioned or indicated on the drawings.

B. REFERENCED STANDARDS

1. National Electrical Manufacturers' Association: NEMA MG1 - Motors and Generators.
2. UL142 - Steel aboveground tanks for flammable and combustible liquids.
3. UL2200 – Stationary engine generator set assemblies.
4. Massachusetts DEP regulations and Federal EPA certification.
5. NEC 2015

C. SUBMITTALS

1. Product Data: Submit product data showing dimensions, weights, ratings, interconnection points, and internal wiring diagrams for engine, generator, control panel, automatic transfer switches, battery, battery rack, battery charger, exhaust silencer, vibration isolators, radiator, enclosure and remote annunciator. Submit manufacturer's installation instructions.
2. Shop Drawings: Prepare and submit complete shop drawings of the emergency generator set and enclosure, including plan and elevation views with overall and interconnection point dimensions, fuel consumption rate curves at various loads, and electrical diagrams, including schematic and interconnection diagrams.
3. Test Reports: Submit certified copies of reports of factory testing required by this section.
4. Closeout Submittals: For inclusion the Operating and Maintenance Manual specified in Division 1, provide the required number of copies of operating and maintenance information, parts manuals, and schematic and wiring diagrams.

D. QUALITY ASSURANCE

1. Installer: Company specializing in performing the work of this section with minimum three years experience.
2. NEMA Standards: Furnish and install motors to conform to NEMA MG1.
3. Code: Furnish and install emergency generator to comply with provisions of the referenced Electrical Code.

E. DELIVERY, STORAGE, AND HANDLING

1. Deliver, store, and protect products under provisions of Section 26 05 00.
2. Accept packaged engine generator set and accessories on site in crates and verify damage.
3. Protect equipment from dirt and moisture by securely wrapping in heavy plastic.

F. WARRANTY

1. Provide written warranty, signed by the manufacturer and installer of the emergency generator equipment, agreeing to repair or replace at no cost to the Owner, equipment which is defective either in material or workmanship.
   a. Warranty Period: 5 years from the date of Substantial Completion of phase 1 of construction.
2. On-going system service and support shall be available from multiple factory certified vendors. Include in the generator package the recommended service agreement. Provide recommended service agreement pricing at the time of bid for completion of the project.

G. MAINTENANCE MATERIALS

1. Furnish one set of tools required for preventative maintenance of the engine generator system. Package tools in adequately sized metal tool box.
2. Provide two additional sets of each fuel oil, and air filter elements required for the engine generator system.

H. MATERIALS

1. manufacturer
   a. Subject to compliance with requirements, furnish emergency generator manufactured by one of the following:
      1) Kohler
      2) Cummins
      3) Caterpillar
      4) Or equal.

I. Provide one 450 kW, 562.5 kVA at .8 PF standby power rated natural gas fueled generator set, mounted in perfect alignment on an all welded, fabricated steel sub-base which shall allow for attachment of all necessary engine and generator accessories.

1. Acceptable Manufacturers:
   a. Kohler
   b. Caterpillar
   c. Onan/Cummings
   d. Generac
   e. MTU Onsite Energy
   f. Or equal

J. Engine

1. Water cooled with unit-mounted radiator. Provide starter and all field wiring required by manufacturer
2. Dry-type replaceable element air cleaners.
3. Full flow lube oil filters and bypass oil filter.
4. Twelve volt starting motor, 12 volt, 3 ampere battery charging alternator.
5. Engine instrument panel to include ammeter, lube oil pressure gauge, lube oil temperature gauge, water temperature gauge, and hour meter.

6. Engine-mounted safety control to provide alarm signals for engine shutdown in event of low oil pressure, high coolant temperature, over speed, over crank, and pre-alarms for high water temperature and low oil pressure.
7. Jacket water heater, 2000 watt, 120 or 208 volt, single phase or as recommended by generator manufacturer.

K. Generator: 450 kW, 562.5 kVA, 277/480 volt, 3 phase, 4 wire, 60 Hz, 1800 RPM revolving field type main generator with brushless exciter and permanent magnet.

Voltage regulation ± 1 percent from no load to full load.

L. Cooling System: Unit mounted radiator with flange attached.

M. Starting System: 12 volt heavy duty lead acid storage battery, connected for 12 volt DC output.

N. Battery rack, cables, and connectors shall be provided.

O. Provide 10 amp battery charger fed from a 120 volt, single phase, 60 Hz service. Battery charger to include high and low battery voltage alarm relays for derangement panel. Battery charger shall meet NFPA 110 Standards.

P. Exhaust System: Furnish one Maxim M-51 3 in. critical silencer, 3 in. side inlet, and one 3 in. end outlet complete with two, 3 in. companion flanges. Furnish one 3 in. x 18 in. flexible stainless steel exhaust connector, flanged on one end, threaded nipple on opposite end. Generator shall meet all applicable emission standards.

Q. Vibration Isolators: Set of four Korfund rubber type vibration isolators for installation between steel base and concrete foundation.

R. Generator Control Panel:

1. To completely control operation of engine generator set. Panel to have automatic start control, AC volt meter, AC ammeter, pointer type frequency meter, volt meter, ammeter and selector switch. Alarm signals to indicate pre-low oil pressure, pre-high coolant temperature, and alarm signals to shut down engine in event of a low oil pressure, high coolant temperature, engine over speed, or over crank. Lights on face of panel to indicate failure. Provide dry contacts for remote disarrangement signal and louvers. Locate remote annunciator in administration area.
2. Terminal strip shall be included with alarms and prewarning devices prewired for remote annunciator specified herein. Provide wiring between generator and remote annunciator panel. Generator control switch shall be mounted on control panel face. A flashing light for selector switch "OFF" shall be included.
3. Provide molded case line circuit breakers mounted on generator in oversized terminal box. Provide physical separation between OS and LS feeder breakers.

4. Generator Overcurrent Protection: The generator set shall be provided with a UL Listed/CSA Certified protective device that is coordinated with the alternator provided to prevent damage to the generator set on any possible overload or overcurrent condition external to the machine. The protective device shall be listed as a utility grade protective device under UL category NRGU. The control system shall be subject to UL follow-up service at the manufacturing location to verify that the protective system is fully operational as manufactured. Protector shall perform the following functions:
   a. Initiates a generator kW overload alarm when generator has operated at an overload equivalent to 110 percent of full-rated load for 60 seconds. Indication for this alarm is integrated with other generator-set malfunction alarms.
   b. Under single phase or multiple phase fault conditions, or on overload conditions, indicates an alarm conditions when the current flow is in excess of 110% of rated current for more than 10 seconds.
   c. Under single phase or multiple phase fault conditions, operates to switch off alternator excitation at the appropriate time to prevent damage to the alternator.
   d. The operator panel shall indicate the nature of the fault condition as either a short circuit or an overload.
   e. Senses clearing of a fault by other overcurrent devices and controls recovery of rated voltage to avoid overshoot greater than 120% of nominal voltage.

S. Automatic Transfer Switches:
1. Provide automatic transfer switches as shown on drawings for operation on 277/480 volts, 3 phase, 4 wire operation. Units to be housed in a NEMA 1 enclosure and shall be 4 pole. Transfer switches over 400 amperes shall have an AIC rating of 65,000 ARMS.
2. Transfer switches 400 amperes or less shall be rated for 42,000 ARMS and fed from a current limiting breaker on the normal side.
3. Entire switch shall be listed under UL 1008.
   a. Acceptable Manufacturers:
      1) Russ Electric
      2) ASCO
      3) Kohler
      4) Or equal
4. Unit shall be provided with standard accessories as follows.
   a. Voltage and Frequency Sensing:
      1) Close differential voltage sensing on all phases of normal pickup adjustable 85-100 percent. Dropout 75-98 percent
      2) Voltage sensing of emergency source. Adjustable pickup 85-100 percent.
      3) Frequency sensing of emergency source. Adjustable pickup 90-100 percent.

b. Time Delays:
   1) Time delay to override momentary normal source outages. Adjustable 0.5 to 6 seconds.
   2) Retransfer to normal with 5 minute cooldown timer.

c. Engine Start Control and Monitoring:
   1) Contact to close when normal source fails.
   2) Contact to open when normal source fails.
   3) Test switch to simulate normal source failure.
   4) Contact to inhibit transfer to emergency power.
   5) The Engine Start Control and Monitoring Modules shall be ASCO 5101 Engine Start Modules or approved equal. The solution must cover and provide complete compliance to the 2017 NEC 700.10 code.
   6) The ATS shall provide continuous monitoring of the entire remote start circuit. Visual and audible annunciation of generator malfunction shall be initiated if the integrity of the start circuit is compromised.
   7) There shall be minimum time delay (less than 5 seconds) in annunciation of any compromised condition such as an open or short circuit. A system which annunciates compromised conditions only after a generator start signal is initiated via a redundant path does not meet the intent of this specification.
   8) The detection of a compromised start circuit shall initiate and latch the generator start circuit.
   9) Each Generator Engine Start Module shall be din-rail mounted and accept up to (8) ATS Engine Start. Each channel must have its own dedicated tri-colored status LED.
   10) Each Engine Start channel must have its own dedicated switch with ability to enable or disable monitoring function.
   11) Engine-start circuit shall be a single pair of typical hardwire used in legacy applications. Additional wiring and components beyond specified herein does not meet the intent of this specification.
   12) Coordinate placement of required components within the generator controls with the specified manufacturers.

5. Test switch to simulate normal source failure.
6. Indicators: Pilot lights to indicate switch in normal position or emergency position.
7. Auxiliary Contacts: Two (2) to close on normal. Two (2) to close on emergency.
8. Optional Accessories Required:
   a. Plant exerciser.
   b. In-phase monitor (Motor Load Transfer). (ATS-OS)
   c. In-phase monitor (Motor Load Transfer). (ATS-LR)
   d. Manual transfer to normal source.
   e. Inhibit transfer to emergency power

f. Elevator control transfer module. A load control circuit consists of two sets of single pole, double throw contacts that operate 3 seconds before transfer in either direction. Contacts rated 3 amperes, 208 volts AC or 10 amperes, 32 VDC, for signal to elevator of generator power available. Provide 2 #14AWG conductors in 3/4 in. conduit, interlock wiring to each elevator controller from each switch controlling elevator power.

9. Coordinate placement of required components within the generator controls with the specified manufacturers.
    1) Provide a communication port to interface with the building management system for transmitting the generator set status and alarms data including alarm on a generator set failure to start automatic weekly excrcise.
    2) Supports industry-standard Modbus_RTU protocol.
    3) Uses either an RS-232 or RS-485 Network port.
    4) Communicates at baud rates up to 19200.
    5) Allows selection of an access code for remote programming.
    6) Remotely monitors system operation including run times, shutdowns, warnings, and input/output activity.
    7) Allows selection of either metric (SI) or English (IP) units.
    8) Provides more than 100 different Modbus_message codes for system monitoring, including System Ready and Generator Running.
    9) Provides remote programming of most system parameters including time delays, trip points, voltage, frequency, and current.
    10) Allows remote engine start/stop and controller reset.

T. Remote Annunciator Panel: A flush mounted panel shall include a visual signal that battery charger is functioning properly and both audible and visual signals. Annunciator shall meet NFPA 110 Standards.

U. Provide NEMA 3R rated remote emergency power off button on exterior of generator enclosure.

V. Audible signal shall have a silencing switch. A lamp test button shall be provided.

W. Provide load bank test in the field by a factory certified representative for two hours at 25 percent, 50 percent, 75 percent and 100 percent load for 30 minutes at each stage and provide testing documentation. Also, provide a two hour building load test transferring the ATS switches to generator power. Provide an NFPA 110 test report for Engineer approval.

X. Miscellaneous: Necessary lube oil and anti-freeze.

Y. Equipment Testing and Instruction Manual and Drawings:
1. Operating instructions and maintenance manuals shall contain the following information:

    Operating Instructions

    Replacement Parts

    Wiring Diagram

    Maintenance

2. The entire emergency system shall be field test operated for two hours. A normal power failure shall be simulated. The engine generator unit shall automatically start, come up to speed, and assume full emergency load. Entire building shall be in operation during test.
3. Custodians of the equipment shall be present during test. At that time they shall be instructed in operation and maintenance.
4. Upon completion of tests, written reports containing results shall be submitted. Test reports shall contain readings taken at 30 minute intervals along with all other pertinent test information.

   Ambient Temperature

   Oil Pressure

   Battery Charge Rate

   AC Volts

   AC Amperes All Phases

   Frequency

   Kilowatts

   Power Factor

Z. Coordination of Trades:

1. The following equipment shall be furnished by Electrical Contractor but shall be installed under other sections.
   a. Anchor bolts to be installed by Section 033000 Cast-in-place concrete based on approved shop drawings.

AA. Generator Outdoor Housing

1. The engine generating set shall be factory installed in a weatherproof outdoor housing. The housing shall provide year round generating set protection against adverse weather and environmental conditions. The enclosure shall be sound attenuated and meet Federal Specifications.
2. The weatherproof shelter shall be constructed or welded and bolted of reinforced aluminum, 14 gauge walls and 14 gauge floor plate. All metal parts shall be prime coated and finished painted.
3. The shelter assembly shall have shuttered air openings on front and sides with mesh screens covering side shutters. The air shutters shall be opened by four 22 volt AC motors when the generating set operates. Motors shall be spring loaded to close shutters when set stops.
4. Hinged double doors on each side and one door in rear of the shelter shall allow easy access to engine generator and controls. All door handles shall be key lock design.
5. Vibration isolators of the open coil spring type, selected for 3 inch (76mm) static deflection, shall be furnished and installed. The number of isolators shall be as recommended by the generator set manufacturer, and complete details shall be included in the Submittals. Anchor bolts, nuts and sleeves shall be supplied with recommended Foundation Plan.
6. The weatherproof housing shall allow installation of the silencer outside or inside the enclosure. Provide critical type silencer.

7. Provide sound deadening materials, baffles, and hoods to reduce noise levels to 75DBA at 7 meters in any direction.
8. Furnish a stainless steel 10' stack exhaust extension supported from the generator housing with rain cap and all nessesary components for a complete installation in accordance with Commonwealth of Massachusetts regulations. Stack shall be powder coated with black heat resistant paint.

BB. REMOTE ALARM ANNUNCIATOR PANEL

1. Provide a generator set remote alarm annunciator panel for installation at the location shown on the drawings.
2. Enclose the panel in NEMA 1 enclosure suitable for flush wall mounting and provide audible (A) and/or visual (V) signals for the following:

	Condition	Signal
1.	Generator set operating	V
2.	Failed to start	A/V
3.	Pre-low lube oil pressure	A/V
4.	Pre-high water temperature	A/V
5.	Low water temperature	A/V
6.	Engine overspeed	A/V
7.	Low battery voltage	V
8.	High battery voltage	V
9.	Low fuel supply	A/V
10.	Fuel leak detection	A/V

3. In the panel face, provide a separate lamp for each of the signals listed above, a lamp test pushbutton switch, and an audible alarm signal device with silence switch having ring back feature.
4. Provide a communication port to interface with the building management system for transmitting the generator set status and alarms data including alarm on a generator set failure to start automatic weekly exercise.

   a. Supports industry-standard Modbus_RTU protocol.
   b. Uses either an RS-232 or RS-485 Network port.
   c. Communicates at baud rates up to 19200.
   d. Allows selection of an access code for remote programming.
   e. Remotely monitors system operation including run times, shutdowns, warnings, and input/output activity.
   f. Allows selection of either metric (SI) or English (IP) units.
   g. Provides more than 100 different Modbus_message codes for system monitoring, including System Ready and Generator Running.

h. Provides remote programming of most system parameters including time delays, trip points, voltage, frequency, and current.

i. Allows remote engine start/stop and controller reset.

CC. EXECUTION

1. Install, align, set, support, and wire equipment in accordance with the contract drawings, specifications and manufacturer's installation manual..

2. Provide adequate temporary supports for the equipment during erection or installation.

DD. TESTING AND INSPECTION

1. Provide services of a factory trained field engineer to inspect the installation, service the engine with lube oil, the radiator with rust inhibitors, and supervise start of the engine set and tests for all systems.

2. Test the equipment and controls after installation, under the supervision of a factory trained engineer, and in the presence of the Architect and the Owner. Certify that the equipment has been tested in accordance with NEMA MG-1 and meets the minimum requirements of that specification.

3. Verify time delay settings of the automatic transfer switches. ATS serving life safety (emergency) loads shall transfer to emergency without delay. Time delay on transfer for the switches serving standby loads shall be set to satisfy the diesel-generator starting kVA value.

4. Testing Procedure:

a. Check all systems to assure compliance with the manufacturer's installation drawings and wiring diagrams..

b. The load tests shall be with a resistance load bank and shall include:

1) 1 hour at 25 percent of rated load.
2) 1 hour at 50 percent of rated load.
3) 1 hour at 75 percent of rated load.
4) 1 hour at 100% percent of rated load.

c. 3. Record at the beginning and end of the test the following parameters:

1) Engine oil pressure.
2) Engine oil temperature.
3) Engine exhaust temperature of exhaust manifold.
4) Jacket water temperature in and out.
5) AC voltage and amperage (all phases).
6) Frequency.

d. Simulate a power failure by transferring the entire load to the emergency power system, and operating the fully-loaded emergency power system for a period of 1 hour.

e. Submit all required documentation for registration of generator with the DEP.

f. Provide NFPA 110 equivalent testing and provide test report to engineer for approval.

EE. MAINTENANCE SERVICE

1. Instruct the operating personnel in the operation and maintenance of the unit. Provide at least one full day for instructing personnel an explaining the operator's manual.

FF. CLEANING AFTER TESTING

1. After completion of testing and adjustment of system, thoroughly clean all exposed surfaces of emergency generator equipment to remove dirt, grease, fingerprints and other contamination. Touch up damaged factory-applied finishes.

2.25 VARIABLE FREQUENCY DRIVES

A. The variable frequency drives (VFD's) shall be solid state, with a Pulse Width Modulated (PWM) output waveform (VVI, six-step, and current source drives are not acceptable). The VFD package as specified herein shall be enclosed in a NEMA 1 enclosure, completely assembled and tested by the manufacturer. The VFD shall employ a full wave rectifier (to prevent input line notching), DC Line Reactor, capacitors, and Insulated Gate Bipolar Transistors (IGBT's) as the output switching device (SCR's, GTO's and Darlington transistors are not acceptable). The drive efficiency shall be 97 percent or better at full speed and full load. Fundamental power factor shall be 0.98 at all speeds and loads.

B. Specifications at 480 volts:

1. Input VAC +/-10 percent (capable of operation to 550 VAC), 3 phase, 48-63Hz. Output 0 - Input Voltage, 3 phase, 0 to 500 Hz for drives up to 75 HP; 0 to 120 Hz for drives over 75 HP. Operation above 60 Hz. shall require programming changes to prevent inadvertent high speed operation. Environmental operating conditions: 0 to 40 C @ 3 kllz switching frequency, 0 to 3300 feet above sea level, less than 95 percent humidity, non-condensing. Units shall be UL, CUL and CA approved.

C. All VFD's shall have the following standard features:

1. All VFD's shall have the same customer interface, including digital display, keypad and customer connections; regardless of horsepower rating. The keypad is to be used for local control, for stepping through the displays and menus.
2. The VFD shall give the user the option of either (1) displaying a fault, (2) running at a programmable preset speed, (3) hold the VFD speed based on the last reference revised, or (4) cause a Warning to be issued, if the input reference (4-20mA or 2-10V) is lost; as selected by the user. The VFD shall provide a programmable relay output for customer use to indicate the loss of reference condition.
3. The VFD's shall utilize plain English digital display (code numbers and letters are not acceptable). The digital display shall be a 40-character (2 line X 20 characters/line) LCD display. The LCD shall be backlit to provide easy viewing in any angle. All set-up parameters, indications, faults, warnings and other information must be displayed in words to allow the user to understand what is being displayed without the use of a manual or cross-reference table.
4. The VFD's shall utilize pre-programmed application macro's specifically designed to facilitate start-up. The Application Macros shall provide one

command to reprogram all parameters and customer interfaces for a particular application to reduce programming time.

5. The VFD shall have the ability to automatically restart after an overcurrent, overvoltage, or loss of input signal protective trip. The number of restart attempts, trial time, and time between reset attempts shall be programmable. If the time between reset attempts is greater than zero, the time remaining until reset occurs shall count down on the display to warn an operator that a restart will occur.
6. The VFD shall be capable of starting into a rotating load (forward or reverse) and accelerate or decelerate to setpoint without safety tripping or component damage (flying start).
7. The VFD shall be equipped with an automatic extended power loss ride-through circuit which will utilize the inertia of the load to keep the drive powered. Minimum power loss ride-through shall be one-cycle, based on full load and not inertia. Removing power from the motor is not an acceptable method of increasing power loss ride-through.
8. The customer terminal strip shall be isolated from the line ground.
9. Prewired 3-position Hand-Off-Auto switch and speed potentiometer. When in "Hand", the VFD will be started, and the speed will be controlled from the speed potentiometer. When in "Off", the VFD will be stopped. When in "Auto", the VFD will start via an external contact closure, and its speed will be controlled via an external speed reference.
10. The drive shall employ three current limit circuits to provide trip free operation:
11. The Slow Current Regulation limit circuit shall be adjustable to 125 percent (minimum) of the VFD's variable torque current rating. This adjustment shall be made via the keypad, and shall be displayed in actual amps, and not as percent of full load. The Rapid Current Regulation limit shall be adjustable to 170 percent (minimum) of the VFD's variable torque current rating. The Current Switch-off limit shall be fixed at 255 percent (minimum, instantaneous) of the VFD's variable torque current rating. The overload rating of the drive shall be 110 percent of its variable torque current rating for 1 minute every 10 minutes, and 140 percent of its variable torque current rating for 2 seconds every 15 seconds, input line fuses standard in the drive enclosure. VFD shall have a DC Line Reactor to reduce the harmonics to the power line and to increase the fundamental power factor.
12. The VFD shall be optimized for a 4 kHz carrier frequency to reduce motor noise and provide high system efficiency. The carrier frequency shall be adjustable by the start-up engineer in ACH 501 units. The VFD shall have a manual speed potentiometer in addition to using the keypad as a means of controlling speed manually.

D. All VFD's to have the following adjustments:

1. Five programmable critical frequency lockout ranges to prevent the VFD from continuously operating at an unstable speed.
2. PI Setpoint controller shall be standard in the drive, allowing a pressure or flow signal to be connected to the VFD, using the microprocessor in the VFD for the closed loop control.
3. Two programmable analog inputs shall accept a current or voltage signal for speed reference, or for reference and actual (feedback) signals for PI

controller. Analog inputs shall include a filter; programmable from 0.01 to 10 seconds to remove any oscillation in the input signal. The minimum and maximum values (gain and offset) shall be adjustable within the range of 0-20 MA and 0-10 Volts. Additionally, the reference must be able to be scaled so that maximum reference can represent a frequency less than 60 Hz, without lowering the drive maximum frequency below 60 Hz.

4. Six programmable digital inputs for maximum flexibility in interfacing with external devices. One digital input is to be utilized as a customer safety connection point for fire, freeze, and smoke interlocks (Enable). Upon remote, customer reset (reclosure of interlock), drive is to resume normal operation.
5. All VFD's that serve the Atrium Smoke exhaust system shall have the display locked out via a passcode after the commissioning of the system. It should not be possible to adjust VFD's while the system is in alarm mode.
6. The following operating information displays shall be standard on the VFD digital display. The display shall be in complete English words (alpha-numeric codes are not acceptable):
7. Output Frequency
8. Motor Speed (RPM, percent or Engineering units)
9. Motor Current
10. Calculated Motor Torque
11. Calculated Motor Power
12. DC Bus Voltage
13. Output Voltage
14. Heatsink Temperature
15. Analog Input Values
16. Keypad Reference Values
17. Elapsed Time Meter
18. kWh meter

E. Speed Command Input shall be via:

1. Keypad.
2. Two Analog inputs, each capable of accepting a 0-20mA, 4-20mA, 0-10V, 2-10V signal. Input shall be isolated form ground, and programmable via the keypad for different uses.
3. Floating point input shall accept a three-wire input from a Dwyer photohelic (or equivalent type) instrument.

F. Accessories to be furnished and mounted by the drive manufacturer:

1. Customer Interlock Terminal Strip-provide a separate terminal strip for connection of freeze, fire, smoke contacts, and external start command. All external interlocks and start/stop contacts shall remain fully functional whether the drive is in hand, Auto or Bypass.
2. All wires to be individually numbered at both ends for ease of troubleshooting.
3. Door interlocked thermal magnetic circuit breaker which will disconnect all input power from the drive and all internally mounted options. The disconnect handle shall be thru-the-door type, and be padlockable in the "Off" position.
4. Manual transfer to line power via contactors. Include motor thermal overload and fuse or circuit breaker protection while in bypass operation. A three position selector switch to control the bypass contactor and the drive output contactor is to be mounted on the enclosure door. When in the "Normal" mode, the bypass contactor is open and the drive output contactor is closed. In the "Test" position both contactors are open, and in the "Bypass" position, the drive output contactor is open, and the bypass contactor is closed. The drive output contactor shall also open when a stop command is given, isolating the motor from the drive. Start/stop signals and safety interlocks will work in drive and bypass modes.
5. Pilot or LED's lights shall be provided for indication of "Normal" operation, "Bypass" operation, and "External Fault". All pilot lights shall be push-to-test type.
6. Service contactor (drive input contactor) which provides the ability to service the drive (electrically isolate the drive while in bypass operation without having to remove power from the motor). The service contactor shall open when the drive is switched to bypass, and also be controlled by a switch which is mounted inside the drive enclosure so that its access is limited to service personnel only.
7. A class 20 bimetallic thermal motor overload relay shall be provided to protect the motor in bypass.

G. Compliance to IEEE – 519:

1. The VFD manufacturer shall provide calculations specified to this installation showing that the Total harmonic Distortion for the VFD's, reflected into the electrical distribution system is limited to the level defined by IEEE - 519 (latest edition) for general systems. Harmonic analysis shall be included with VFD submittal for approval by the engineer.
2. The VFD manufacturer shall conduct on site harmonic measurements before and after startup of the VFD's. Results of the measurements, showing harmonic contribution of the VFD's, shall be provided to the engineer one month after start up.
3. Three phase A. C. input line reactors shall be provided as a minimum, with all VFD's. The line reactors are to provide attenuation of line side voltage transients, thus preventing overload trips or other unnecessary V.F.D. shutdown, and provide a reduction in harmonic distortion.
4. Line reactors shall have the following requirements:
   a. Two or Three percent line impedance.
   b. 150 percent continuous current rating for one minute.

c. Saturation rating no less than 2.5 times the continuous current rating.

d. U.L. recognized.

H. General: Install variable frequency drives where indicated, in accordance with manufacturer's published installation instructions, complying with recognized practices to ensure that variable frequency drives comply with requirements and serve intended purposes.

I. Access: Provide access space around control panels for service as indicated, but in no case less than that recommended by manufacturer.

J. Support: Install drive control panels on walls where indicated on drawings. Provide necessary Unistrut and structural steel to provide adequate support.

K. Electrical Wiring: Install electrical devices furnished by manufacturer but not specified to be factory-mounted. Furnish copy of manufacturer's wiring diagram submittal to Electrical Installer.

1. Verify that electrical wiring installation is in accordance with manufacturer's submittal and installation requirements of Division 26 sections. Do not proceed with equipment start-up until wiring installation is acceptable to equipment installer.

L. Start-Up:

1. Certified factory start-up shall be provided for each drive by a factory authorized service center. A certified start-up form shall be filled out for each drive with a copy provided to the owner, and a copy kept on file at the manufacturer.

M. Adjusting and Cleaning:

1. Alignment: Check compatibility of control panel to motor and where necessary, adjust frequency and provide necessary filters to assure noise free operation of motors. Verify response from control panel to motor to assure turn down ratio specified and that static pressure signals are being received and that drives are controlling as specified and within recommended tolerances by manufacturer. Provide start-up report prepared by manufacturers representative to assure operation is as specified.

2. Cleaning: Clean factory-finished surfaces. Repair any marred or scratched surfaces with manufacturer's touch-up paint.

N. Acceptable Manufacturers:

1. Allen – Bradley
2. ABB
3. Siemens
4. Square D
5. Or equal

2.26 LIGHTNING PREVENTOR SYSTEM

A. DESCRIPTION

1. Provide lightning protection system and related work in accordance with Contract Documents.
2. Scope of Work includes:
   a. Provide Early Streamer Emission (ESE) lightning protection system for the building.
3. Related Work of other Sections:
   a. Roof flashing
   b. Non-metallic conduit
   c. Surge Suppression
   d. Grounding

B. QUALITY ASSURANCE

1. Codes: Comply with the Building Code of the State and standards listed.
2. Standards:
   a. Underwriters Laboratories Inc.
      1) UL 96
   b. Manufacturer's Installation Standard
      1) HBP-21
   c. The lightning protection system shall be designed by the engineering staff of the manufacturer of the equipment proposed to be installed.
3. Qualifications:
   a. Installer's Qualifications:
      1) The installation shall be made by or under the supervision of a licensed electrical contractor.
4. Certification:
   a. ARL Testing Laboratory shall certify that the lightning protection system has been installed in accordance with the design and specification requirements.
      1) Applied Research Laboratories Inspection:
         a) Send completed ARL Certification Application Form to
         b) Applied Research Laboratories
      2) Correction of Work: Areas indicating non-conformance with Manufacturer's Installation Standard HBP-21 shall be corrected by the installing contractor at no additional cost to the owner.
      3) After completion of ARL inspection and acceptance, provide the owner with ARL Certification and Manufacturer's guarantees and warranties.
5. Testing:
   a. A resistance-to-ground test of the completed system shall be performed using IEEE "Fall of Potential Method".
      1) Resistance-to-ground reading shall not exceed 10 ohms.

C. SUBMITTALS

1. Submittal Package: Complete shop drawings showing the type, size and locations of all equipment, grounds and cable routings shall be submitted to the architect for approval prior to start of work.
2. Submit shop drawings and product data as specified below.
   a. Shop Drawings: Detailed scale drawings of the complete system as proposed to be installed.
   b. Product Data:
      1) Catalog cut sheets and installation instructions
      2) Bill of materials

D. ACCEPTABLE MANUFACTURERS

1. All equipment shall be new and the product of a single manufacturer as outlined herein.
2. Lightning protection system manufacturer shall be equal to:
   a. Lightning Preventor of America
   b. Heary Bros. Lightning Protection Co., Inc.
   c. Or equal
3. Materials:
   a. All materials for this installation shall be as defined by Underwriters Laboratories UL 96.
   b. Copper shall be of the grade ordinarily required for commercial electrical Work, generally designated as being 98 percent conductivity when annealed.
      1) Copper components shall not be used on aluminum surfaces.
   c. Air terminal:
      1) Early Streamer Emission (ESE) air terminal
         a) 5/8” x 12” chrome plated copper
         b) Chrome plated copper support structure and sphere
         c) Threaded air terminal
   d. MAST
      1) Aluminum mast with threaded connection for the ESE air terminal and bonding plate for cable connection.
      2) Mast support, depending upon application, may be roof mounting base, side mounting base or structural support.
   e. Conductors:
      1) Copper Cable
         a) Copper 28 strands of 14 gauge copper ropelay wire, 115,000 circular mils, weighing not less than 375 lbs. per 1000 ft.
         b) The structural steel may be used in lieu of down conductors.
            - Every other column or an average of 60’-0” intervals shall be bonded and connected to the ground system.

f. Attachments:
   1) Fasteners shall be of suitable configuration for the intended application and of the same material as the conductor. Nails, screws or bolts employed to secure the fasteners shall be stainless steel.

g. Connections and Splices:
   1) Connectors and splices shall be of suitable configuration and type for the intended application and of the same materials as the conductor.

h. Ground Rods:
   1) 3/4” x 10’-0” copper-bond ground rods with two-bolt copper ground rod clamp.
   2) One delta ground grid shall be installed for each down conductor.
   3) 24” x 24” x 20 gauge copper ground plates may be used in lieu of ground rods if soil conditions do not allow driving of ground rods.

E. INSTALLATION

1. Install the lightning protection system as required to obtain ARL certification.
2. The system shall consist of a mast-type system on the highest roof. The system shall include air terminal, mast, grounding cable, ground rods and splices.
3. Cables on roof shall be exposed and shall be fastened every 3’-0” max.
4. Downlead cables to ground rods shall be in 1” non-metallic conduit concealed within building construction.
5. Downlead cables shall not be brought directly through the roof. Thru-roof rods through proper roof flashings shall be utilized for this purpose.
6. The roofing contractor shall furnish and install all proper roof flashings.
7. The electrical contractor shall furnish and install all necessary conduit for concealed down conductors.
8. Copper components shall not be connected to aluminum surfaces except by means of a bimetal connector.

F. COORDINATION

1. The lightning protection installer shall work with other trades to insure a correct, neat and unobtrusive installation.
2. A sound bond shall be made to the main water service, and to all other building grounding systems, including both telephone and electrical.
3. Proper arresters shall be installed on the power and telephone service by either the utility or the electrical contractor, as applicable.
4. Install surge arresters on electric service entrance secondary conductors.

G. INSPECTION AND LISTING LABORATORY

1. The installing contractor shall provide a videotape of the installation, including but not limited to; air terminal, mast mounting, bonding connections (waterline & structural steel), down conductors, ground rods/grids, test results and all buried, concealed or inaccessible connections and components.

a. The videotape and resistance-to-ground test results shall be forwarded to the lightning protection system manufacturer for review.

b. The installation shall be inspected by Applied Research Laboratories, Inc. for compliance with Manufacturer's Installation Standard HBP-21.

2.27 FIRESTOP SYSTEMS

A. General: Provide firestopping at all new and existing fire-rated construction where penetrated by the Work of this Section.

B. Refer to Section 078400 - Firestopping, for all product requirements for maintaining integrity of fire-rated construction at penetrations.

2.28 BI-DIRECTIONAL ANTENNA SYSTEM

A. Summary

1. This specification describes the criteria for deploying an Public Safety Radio Distributed Antenna System (DAS). The DAS components specified in this document include: Bi-Directional Amplifiers (BDA), Donor Antennas, Coverage Antennas, Coax Cable, Coax Connectors, Splitters, Combiners and Couplers. These devices shall be used as part of a system, by the DAS integrator, experienced with designing projects for in-building, public safety, 2-way radio systems.
2. The system specified is based upon TX/RX Systems Bird Technologies Group RescueLine Signal Booster and represents the performance standard upon which any equivalent solution shall be based. It shall be the integrator's responsibility to base the design on the frequency ranges used by both the local Police and Fire departments. The system provided shall meet NFPA 72, 2010, Chapter 24 and Annex A and Massachusetts CMR 780, 403-6, Section 1 codes and shall be designed as such. It shall include a true, integrated battery backup unit which is serially connected to the main BDA system.

B. Abbreviations and Acronyms

1. ACG: Automatic Gain Control
2. AHJ: Authority Having Jurisdiction
3. ATP: Acceptance Test Plan
4. BDA: Bi-Direction Amplifier
5. BOM: Bill-of-Material
6. DAS: Distributed Antenna System
7. EBS: Educational Broadband Service
8. ESMR: Enhanced Specialized Mobile Radio
9. FCC: Federal Communications Commission
10. GUI: Graphical User Interface
11. LMR: Land Mobile Radio
12. MTBF: Mean Time Between Failure
13. NFPA: National Fire Protection Association
14. NMS: Network Management System

15. PSN: Public Safety Network
16. RoF: Radio-over-Fiber
17. RSL: Received Signal Level
18. SMR: Specialized Mobile Radio
19. SMS: Short Message Service
20. SNIR: Signal-to-Noise Interference Ratio
21. SOW: Statement of Work
22. VSWR: Voltage Standing Wave Ratio

C. Definitions

1. Acceptance: Expressed approval by the AHJ and owners representative

D. General Description

1. The building shall be both pre and post tested for fire and police department radio signal strength. A test shall be scheduled with the Fire Department and Police Department. Any expense incurred by the test shall be the responsibility of this trade subcontractor.
2. A site survey to determine the RF signal strength on or near the building grounds to determine the level of amplification necessary to provide clear and reliable radio communications over 95% of the overall area inside the building will be required.
3. The Fire/Police Department radio test shall check the signal reception in several locations on the floor area. Signal strength shall be for clear reception throughout the building utilizing the type of hand held radio unit that is used by the Fire and Police Department. Quantity of test locations shall be determined and conducted by the local department representative. Each floor of the building shall be divided into a grid of approximately twenty (20) equal areas. A maximum of one (1) area will be allowed to fail the test per floor. A spot located approximately in the center of a grid area will be selected for the test. Once the spot has been selected, prospecting for a better spot within the grid area will not be permitted. Field strength testing instruments are to be recently calibrated (1 year) and of the frequency selective type incorporating a flexible antenna similar to the ones used on the hand held transceivers.
4. Required Signal Levels:
   a. Signal strength shall be for clear reception throughout the building utilizing hand held radio units of the type(s), which are used by the Fire/Police Department. Signal strength testing shall follow TSB-88 standards using delivered audio quality measurements (DAQ).
   b. A minimum signal strength of –95 dBm (DAQ4) shall be available on over 95% of the floor area required to be covered when transmitted from the fire department.
   c. A minimum signal strength of –95 dBm (DAQ4) shall be received at the fire department system from over 95% of the floor area required to be covered.
5. Required Broadcasting Frequency:
   a. Frequency to be compatible with Fire and Police Department equipment.

b. The building owner will be responsible for keeping the operational frequencies of the BDA compatible with the Fire and Police Department radio system.

c. Frequncies:

1)	Police	471.7625 / 474.7625
2)	Fire	483.7625 / 486.7625
3)	City Emergency	453.2125 / 458.2125

6. The bi-directional antenna type system shall consist of the following components:
   a. Bi-directional radio amplifier
   b. Plenum rated coaxial cable
   c. Antennas (internal and external)
   d. Terminators
   e. T-taps (if required)
   f. Other components and interconnecting circuitry
   g. Battery Backup NFPA Compliant unit (not UPS system)
   h. Connect power supply to emergency circuit
7. It is the intent of these specifications that where a BDA system is required, a complete fully functioning system shall be installed, approved and tested before an Occupancy Permit is issued.
8. Areas requiring coverage include stairwells corridors, hallways, and other areas designated by the Fire Marshalls and/or the Authority Having Jurisdiction (AHJ).
9. The Electrical Subcontractor shall coordinate with the Fire Marshall's office and Police Department Communications Division to obtain the correct frequencies and other similar information necessary to deploy a complete and fully operational system at this location.
10. Expansion: Without replacing or adding to the Infrastructure, the system shall have expansion capabilities to support the addition or changes of radio frequencies and future building renovations. Any additional Components required for system expansion shall comply with all specifications of this Section.
11. Alarming: The BDA shall include the following outputs which shall interface to the fire alarm system:
    a. Signal booster malfunction alarm
    b. Loss of AC Power Alarm
    c. Low Battery Alarm
    d. Antenna Circuit Malfunction
    e. Charge Failure Alarm
    f. Coordinate the installation of these alarms with the fire alarm contractor.
12. Antenna locations as shown on the drawings are approximations. The system provider is responsible for locating the in-building antennas and the donor antenna required by the equipment selected, proposed design and the design criteria.

E. Design Submissions

1. This trade contractor shall complete a Fire Alarm Permit Application acquired from the Fire Prevention Division stating a “BDA” installation.
2. Plan Review: Provide one line, schematic and detail drawings of the proposed system architecture. Indicate proposed locations for system components. Provide specifications for procurement and installation of a complete system for review by the Fire Department and all other agencies and authorities having jurisdiction (included will be operational frequencies).
3. Testing and Commissioning: Coordinate the completion date of the Fire Department radio signal repeater system so as to permit a Certificate of Occupancy to be obtained in a timely manner, in accordance with a schedule established by the owner’s project manager.
4. The entire system shall meet with the approval of the Fire Department and all other agencies and authorities having jurisdiction before a Certificate of Occupancy will be issued.

F. Quality Assurance

1. Qualifications: The Installer shall employ NICET certified technicians.

G. Codes, Standards and Certifications

1. All work, including but not limited to: cabling, pathways, support structures, wiring, equipment, installation, workmanship, maintenance and testing shall comply with the latest editions of the National Fire Protection Association (NFPA), National Electrical Code, National Electrical Safety Code, all applicable local rules and regulations, equipment manufacturer's instructions, and the National Electrical Subcontractor's Association (NECA) Standard of Installation. In case of discrepancy or disagreement between the documents noted above, the Electrical Subcontractor shall satisfy the most stringent requirements.
2. Requirements set forth by first-responder code, ordinance, or the AHJ shall supersede the requirements described herein and shall be met in their entirety. It is The Electrical Subcontractor’s responsibility to ensure that the system complies with local code, ordinances or requirements established by the PSN AHJ.

H. Requirements

1. WSP DAS:
   a. On a per channel basis, the downlink RSL for each frequency band shall meet or exceed Design Audio Quality (DAQ) testing criteria.
   b. Prior to installation, contractors shall confirm the channel count, loading and frequencies use in the serving area, and shall guarantee coverage for these channels per DAQ 3.4t criteria. The complete list shall be included as part of The Electrical Subcontractors submittal
   c. The DAS shall deliver coverage throughout 95% of the building, and 100% of areas designated as critical. Coverage areas shall include stairwells, elevators, and underground spaces.
   d. The system shall be housed in a NEMA 4 cabinet and shall include 24 hour battery backup.

e. The system shall maintain maximum required output power while preventing excessive emissions per FCC requirements.

I. Submittals

1. The Electrical Subcontractor, prior to beginning the on-site installation, is required to submit , for approval by the owner, a complete list of the proposed equipment with a system diagram showing how the various components are interconnected and their function. Included in the submittal shall be:

   a. Product Data: Submit manufacturer datasheets for the following components:
      1) Bi-Directional Amplifiers (BDA)
      2) Donor and Coverage Antennas
      3) Coaxial Cable and Connectors
      4) Splitters, Combiners and Couplers

   b. Shop Drawings: Submit the following items:
      1) RF site survey results
      2) System overview and riser diagram.
      3) Overlay of system components on floor plans.
      4) Donor Antenna lightning suppression and grounding details

   c. Statement of Work (SOW): Submit a brief description of the DAS integrator role and responsibilities on this project. At a minimum, the services included shall be to perform the RF survey, systems design, test, optimization and commissioning of the DAS system

   d. Acceptance Test Plan (ATP): Submit a proposed ATP including cable testing reports. At a minimum, testing requirements shall be designed to satisfy requirements of section 3.16.

   e. Warranty Documents:
      1) Submit for all manufactured Components specified in this Section.
      2) Submit Contractor's System Warranty.

2. Submittal Requirements at Close Out

   a. Drawings: Submit as-built drawings indicating:
      1) A final, signed copy of all previously submitted documents reflecting the final, as-built representation, equipment used and details
      2) Cable routing, splitters, couplers and coverage antenna final locations
      3) Active component locations, layout, configuration and programmed parameters

   b. Test Reports
      1) Submit Accepted ATP reports confirming the requirements of Section 1.07 have been met.

   c. Field Reports: Submit sweep-testing results for all cable runs.

   d. Field Reports: Submit OTDR test results for all fiber runs.

   e. Operation and Maintenance Data: Submit hardware and software manuals for all Active Components.

f. Warranty Documents:
   1) Submit for all manufactured components specified in this Section.
   2) Submit Contractor's System Warranty.

J. Warranty

1. Contractor shall warranty that the BDA equipment furnished shall be free from defects of material for a period of 5 years, beginning on the date of substantial completion, excluding specific items of work that require a warranty of a greater period that may be set forth in this Specification. The battery backup unit may carry a standard 1 year warranty. Include any costs necessary to extend the BDA warranty to 5 years.

2. Contractor shall warranty that all other materials furnished shall be free from defects of material for a period of 1 year, from the date of Substantial Completion, excluding specific items of work that require a warranty of a greater period that may be set forth in this Specification. Contractor shall warranty the workmanship for a period of 1 year, from the date of Substantial Completion, excluding specific items of work that require a warranty of a greater period that may be set forth in this Specification. Contractor shall warranty the system's performance for a period of 1 year, from the date of Substantial Completion, excluding specific items of work that require a warranty of a greater period that may be set forth in this Specification. Immediately upon receipt of written notice from the Owner, The Electrical Subcontractor shall repair or replace at no expense to the Owner, any defective material or work that may be discovered before final acceptance of work or within the warranty period; any material or work damaged thereby; and adjacent material or work that may be displaced in repair or replacement. Examination of or failure to examine work by the Owner will not relieve Contractor from these obligations.
3. Manufacturer Warranty:
   a. Splitters, Couplers and Coverage Antennas: standard manufacturer's warranty
   b. Coaxial Cable and Connectors: standard manufacturer's warranty
   c. Fiber-Optic Cable: standard.
   d. Active Components: standard

K. DAS System Integrators

1. Cybercom
2. Comtronics
3. Applied Communications Services, Inc.
4. Or equal.

L. Manufacturers

1. Specified BDA Manufacturers:
   a. TX/RX- Bird Electronics
   b. CommScope/Andrew
   c. Cellwave Inc.

d. Or equal.

M. General

1. The system shall be completed with all components and wiring required for compliance with all applicable codes and regulations, and for its operation as described hereinafter. No exclusion from or limitation in the symbolism used on the drawings or the language used in these specifications shall be interpreted as a reason for omitting any appurtenances or accessories required to enable the system to perform the specified functions.

2. Upon completion of the installation, the work shall include making all arrangements with the owner's project manager and providing any assistance necessary for inspection and test required for approval by the Fire Department. Modifications, adjustments and/or corrective work necessary to obtain approval along with subsequent inspection and test resulting from the issuance of a "Notice of Defect" shall precede any consideration of formal acceptance by the building owner. In conjunction with the above, training as deemed necessary to instruct authorized building personnel in the proper operation of the system shall also form a part of the required work. Provide four hours of training.

N. Power Supply

1. The central equipment shall be supplied with an emergency power unit including batteries and battery charging equipment that maintains this cabinet and all outlying equipment that requires power operation without any change in status for a minimum period of twenty-four (24) hours. The emergency power units(s) shall be sized to meet the following minimum requirements: operating in normal (supervisory) mode, twenty-four (24) hours, followed by twelve (12) hours of emergency operation. Batteries shall be of the sealed maintenance free type.
2. System design shall be such that neither the failure of the normal power source, the transfer to an emergency source, nor the retransfer to the normal source shall cause a change in system status.
3. Serially connected battery backup.

O. Equipment Location and Protection

1. Secured Space: The bi-directional radio amplifiers shall not be located in electric closets. They shall be located in a suitable non-finished space as approved by the engineer and/or where specifically shown on the drawings. The entrance to the secured space shall clearly identify the space as having the "Fire Department" radio signal repeater equipment, by the use of an attached engraved nameplate.
2. Unsecured Space: The bi-directional amplifiers shall be provided with NEMA 4 enclosures, hinged lockable doors, electric supervision against unauthorized access and the removal of any components, and shall each have an attached engraved nameplate identifying the unit.

3. The bi-directional amplifier shall be supplied with cavity style filtering in order to minimize unwanted frequencies from entering the amplifier. Cavities shall be tuned to the frequencies provided by the Fire Department, Police, and School Department. Cavity filters will be housed to allow access by technicians, but will be protected from tampering, or accidental damage.
4. The bi-directional amplifier shall contain automatic limiting control circuitry to avoid producing overdriven outputs from the amplifier.

P. Maintenance

1. Inspection and Test: Provide all material and labor to test system by verifying operation of the system throughout the building. Adjust to provide optimum system performance. Parts and labor for repairs and/or replacements is excluded.

Q. Components

1. Yagi Donor (Outdoor) Antennas:
   a. Electrical:
      1) Frequency band: In accordance with School/Police/Fire Department requirements
      2) Bandwidth > 1.5 VSWR: 20
      3) Gain: ≥ 10 dB
      4) Maximum input power: 250 watts
      5) Vertical Beamwidth: 44 Deg.
      6) Front-to-back ratio: ≥ 16 dB
      7) Impedance: 50 Ω
      8) Beamwidth, Horizontal, degrees: 60
      9) Azimuth Pattern: As proposed by the manufacturer to meet the specifications in this Section.
   b. Mechanical:
      1) Connector: 50 Ω N Type Female
      2) Mounting: Pole
   c. Environmental:
      1) Temperature: -40 °C to +60 °C
      2) Lighting protection: Direct ground
      3) Waterproof level: IP 66
      4) Wind Speed, maximum: 125 mph
      5) Wind Load: 0.45 sq. ft.
2. Bi-Directional Amplifier (BDA):
   a. Characteristics
      1) Frequency: As determined by Police, Fire Department, and School Department requirements
      2) Gain: +80dB maximum
      3) Programmable Gain adjustment attenuation, 0-30dB, 0.5 dB steps
      4) Maximum Output Power: + 32 dBm
      5) Noise Figure: 8 dB maximum
      6) Operating Temperature Range: -30 °C to +50 °C

7) Chassis: Shall be capable of rack or wall mounting by the DAS integrators design.
8) Filtering: Digital
9) Separate Control: Each RF amplifier shall be capable of adjusting and controlling power levels for each WSP when multiple WSPs share a single amplifier.
10) FCC Part 90.219 Type Classification: Class A
11) Alarming: Dry contacts for remote alarms
12) Mounting Options: shall support rack, wall and pole mounting
13) Power Consumption: less than 100VA

b. Compliance:
1) NFPA: The BDA shall comply with NFPA-1 2009 edition Annex O In-Building Public Safety Radio Enhancement Systems.
2) FCC: Shall be FCC type certified.

3. Air Dielectric, Plenum Rated Cable:
a. Material Characteristics:
1) Jacket: Halogenated, Fire-Retardant, Plenum rated
2) Outer Conductor Material: Corrugated Aluminum or Corrugated Copper
3) Inner Conductor Material: Copper-Clad Aluminum Wire

b. Electrical Characteristics:
1) Impedance: 50 ± 2.0 Ω
2) Frequency Band: 1 – 8800 MHz
3) Peak Power Rating: ≥ 40.0 kW

c. Mechanical Characteristics:
1) Diameter Over Jacket: ≤ .627 in
2) Minimum Bending Radius: ≤ 5 in
3) One Time Minimum Bending Radius: ≤ 3 in
4) Standard Conditions: VSWR 1.0, ambient temperature 20 °C (68 °F)

4. Foam Dielectric Cable: To be used for donor antenna and outdoors.
a. Material Characteristics:
1) Jacket: Non-halogenated, Fire-Retardant Ployolefin
2) Outer Conductor Material: Corrugated Copper
3) Inner Conductor Material: Copper-Clad Aluminum Wire or Copper Tube

b. Electrical Characteristics:
1) Impedance: 50 ± 1.0 Ω
2) Frequency Band: ½” Nominal: 1 – 8800 MHz, 7/8” Nominal: 1 – 5000 MHz
3) Peak Power Rating: ≥ 40.0 kW

c. Mechanical Characteristics:
1) Diameter Over Jacket: ½” Nominal: ≤ .630 in, 7/8” Nominal: ≤ 1.1 in
2) Minimum Bending Radius: ½” Nominal: ≤ 5 in, 7/8” Nominal: ≤ 10 in

3) One Time Minimum Bending Radius: ½" Nominal: ≤ 2 in, 7/8" Nominal: ≤ 5 in

d. Attenuation Characteristics: ½" Nominal
   1) Frequency (MHz) Attenuation (dB/100ft): 450 ≤ 1.447
   2) Standard Conditions: VSWR 1.0, ambient temperature 20 °C (68 °F)

e. Attenuation Characteristics: 7/8" Nominal:
   1) Frequency (MHz) Attenuation (dB/100ft): 450 ≤ .744
   2) Standard Conditions: VSWR 1.0, ambient temperature 20 °C (68 °F)

5. Fiber-Optic Master Unit: Active fiber system, the Fiber- Optic Master Unit shall convert radio over coax to Radio-Over-Fiber (RoF) for distribution to Fiber-Optic Remote Units.

a. Characteristics
   1) Transmission Media: Single-mode fiber at 1310 nm
   2) Operating Temperature Range: +5 °C to +40 °C
   3) Impendence: 50 Ω
   4) Chassis:
      a) Shall be of modular design capable of supporting ≥ 32 Remote Units per 19", 4 RU chassis
      b) Shall support redundant power supplies
      c) Shall have the capability to remotely power the Remote Units via composite fiber-optic cable

b. Automatic Gain Control (AGC): Shall provide AGC for optical loss compensation

c. Optical Budget: Shall support ≤ 3 dB optical budget (~3 km or 2 miles)

d. Auxiliary Channel: Shall provide an input to support 400 to 2700 MHz for future

e. expandability

f. Interlink: Shall support one fiber or two fibers bi-directional optical link for distances up to 20 km with a 10 dB optical budget

g. Remote Supervision:
   1) Shall support the TCP/IP protocol, SNMPv2, FTP, HTTP, Telnet, and be fully compatible with general purpose SNMP managers
   2) Remote access shall be available via Point-to-Point Protocol (PPP), over circuitswitched/ packet data and wired/wireless modems
   3) Each Active device shall be manageable via a Web GUI
   4) Auto Mapping: Each board position shall be automatically mapped during system turn-up

h. Frequency Bands Supported: 800 MHz PSR. There are (3) frequencies used (two police and one fire).

R. Installation

1. The Electrical Subcontractor shall install the DAS in accordance with the integrator's instructions and recommendations.

2. Cable and Equipment:
   a. Installation shall include the delivery, unloading, setting in place, fastening to walls, floors, ceiling, or other structures and where required, penetration fire-stop, interconnecting wiring of the system components, equipment alignment and adjustments, and all other work whether or not expressly required herein which is necessary to result in complete operational system.
   b. All installation practices shall be in accordance with, but not limited to, these specifications and drawings. Installation shall be performed in accordance with the applicable standards, requirements and recommendations of National, State, and Local Authorities having jurisdiction. All distributed antenna cables shall be installed such that the cables are straight as possible.
   c. During the installation, and up to the date of final acceptance, the integrator shall be under obligation to protect his finished and unfinished work against damage and loss. In the event of such damage or loss, he shall replace or repair such work at no cost to the owner.
   d. All equipment shall be properly mounted on equipment racks or walls and secured in place. Wall mounted equipment shall be mounted over a ½" plywood securely attached to the wall.
   e. Cables shall be properly supported with dedicated hangers or brackets. Cable trays shall be used only if they are dedicated low voltage trays and only with approval from the owner.
   f. Fastenings and supports shall be adequate to support their loads with a safety factor of at least three.
   g. All boxes, equipment, etc shall be secured plumb, level and square.
   h. In the installation of equipment and cable, consideration shall be given to operational efficiency and overall aesthetic factors. Antennas shall be centered and in-line with other ceiling mounted devices
   i. All cables, regardless of length, shall be marked with cable markers reading "Public Safety Radio", at regular intervals but not less than every 30 ft. There shall be no unmarked cables at any place in the system. In addition, markings codes at each end of the cables and patch panels shall correspond to codes shown on drawings and/or run sheets.
   j. All cables the integrator installs must be handled in accordance with the manufacturers guidelines. Transmission line cables have minimum bending radius specifications that shall be followed. In the event a cable is kinked or bent excessively during installation that section of cable cannot be used, even if subsequently straightened. The damaged area of the cable shall be removed and a new section installed using correct splice methods. Ultimately the cable must pass the testing and meet the manufacturer's requirements
   k. Radio communications cabling shall not be grouped with electrical cabling. It can only share sleeves and raceways with other low voltage data and communications cables.
   l. Connection between cables and other antenna components shall use N-Type premium connectors. No splicing is permitted.

m. All power dividers shall be securely mounted in place by bolting the mount to a solid surface or securing each by suspension on the cables within 4 inches of each connector termination at the power divider. The transmission lines connecting to the device shall be routed in the shortest possible path.

S. Grounding Procedure

1. In order to minimize problems resulting from improper grounding, and to achieve maximum signal-to-noise ratios, the following grounding procedures shall be adhered to:
2. System Ground: A signal primary “system ground” shall be established for the system. All grounding conductors in that area shall connect to this primary system ground. The system ground shall consist of a copper bar of sufficient size to accommodate all secondary ground conductors. An extension of the ground shall connect to the buildings lightning protection system per the direction of the on-site electrical engineer.
3. A copper conductor, having a maximum of 0.1 Ohms total resistance, shall connect the primary system ground bar to the primary system ground ring.
4. Secondary system grounding conductors shall be provided from all racks, radio consoles, and undergrounded radio equipment in each area, to the primary system grounding point for the area. Each of these grounding conductors shall have a maximum of 0.1 Ohms total resistance.
5. Under no conditions shall the AC neutral conductor, either in the power panel or in receptacle outlets, be used for a BDA system ground.
6. Radio cable Shields: All radio cable shields shall be grounded at both ends.
7. General: Because of the great number of possible variations in grounding systems, it shall be the responsibility of the installer to follow good engineering practice, as outlined above, and to deviate from these practices only when necessary to minimize crosstalk and to maximize signal to- noise ratios and reduce interference in the radio systems.

T. Cable and Conduit

1. Note the following circuitry requirements:
   a. Conduit intended for use with the firefighter’s communication bi-directional radio amplifier system shall be steel electric metallic tubing (EMT), except as follows:
      1) It shall be galvanized steel intermediate conduit where mounted within 8’-0” of the floor in mechanical spaces or otherwise exposed to mechanical damage, or where intended for embedment in concrete.
      2) It shall be galvanized steel intermediate conduit if local authorities prohibit use of EMT.
      3) It shall be rigid galvanized steel conduit for the power supply to the central equipment and to all outlying equipment cabinets requiring a 120-volt or 120/208- volt supply.

b. Where wires and cables are permitted to be run without conduit, they shall be independently supported from the building structure or ceiling suspension systems at intervals not exceeding four feet on center, utilizing cable supports specifically approved for the purpose. Wires and cables shall not rest on or depend on support from suspended ceiling media (tiles, lath, plaster, as well as splines, runners or bars in the plane of the ceiling), nor shall they be supported from pipes, ducts or conduits. Bundling and/or supporting ties shall be of a type suitable for sue in a ceiling air handling plenum regardless of whether or not installed in a plenum.

c. Cables shall be tagged or labeled at each termination point and in each intermediate junction box, pull box or cabinet through which they pass, as well as intervals not exceeding 50 feet on centers where cables are run without conduit.

d. Comply with applicable building and electrical code requirements for locating and routing circuitry, for installing circuitry, and for fire stopping.

e. The covers of all dedicated junction, pull boxes shall be painted red and labeled “Fire Dept. Radio System”. Junction and pull boxes will not be shared with other systems.

f. Cables other than radiating coaxial cables shall be run in conduit where indicated by the Engineer. Where not indicated, cable shall be installed per manufacturer’s recommendation. Conduit shall be electric metallic or threaded conduit subject to the restrictions specified elsewhere for light and power circuitry.

g. Radiating coaxial cables shall be run without conduit. Where installed in a plenum type ceiling cable insulation shall be of a fire-resistant low-smoke producing type, with a minimum rating of CATVR. This classification shall be clearly marked on the outer surface of the cable at regular intervals.

U. Acceptance Testing

1. Submit certification that system is compatible with Police and Fire Department radio systems prior to installation. There are (3) frequencies required.
2. Verify proper operation of system by means of field test with:
3. Fire Department requirements, and include all adjustments and modifications to the system required for proper operation. Coverage of each floor of the building to a minimum of 95% is required for acceptance.
4. No activation, or power up of any RF equipment is permitted without first obtaining permission of the Fire Department. This includes any testing or calibration.
5. The Electrical Subcontractor shall complete the acceptance testing as prescribed in the approved Acceptance Test Plan (ATP) submittal.
6. Acceptance Test Procedure: Upon completion of installation, the building Owner will have the option to participate in the radio system tested to ensure that two-way radio coverage on each floor of the building is a minimum of 90 percent. And be tested as follows:
7. Each floor of the building shall be divided into a grid of 20 or more, approximately equal areas. No two test locations shall be greater than 50 ft apart

8. The test shall be conducted using a calibrated portable radio of the latest brand and model used by the agency talking through the agency's radio communications system.
9. No area designated as critical and no two adjacent areas shall be allowed to fail the test.
10. In the event that any three non-adjacent, non-critical areas fail the test, in order to be more statistically accurate, the floor may be divided into smaller areas. In the event that three noncritical, non-adjacent areas still fail the test, the Electrical Subcontractor shall reconfigure the system to meet the 90-percent coverage requirement with no three adjacent areas failing.
11. A test location approximately in the center of each grid area shall be selected for the test by the public safety or owner's representative, then the radio shall be enabled to verify two-way communications to and from the outside of the building through the public agency's radio communications system. Once the test location has been selected, that location shall represent the entire area. If the test fails in the selected test location, that grid area shall fail, and prospecting for a better spot within the grid area shall not be allowed.
12. The gain values of all amplifiers shall be measured and the test measurement results shall be noted on the as-built drawings and the O&M manuals so that the measurements can be verified during annual tests.
13. As part of the installation a spectrum analyzer or other suitable test equipment shall be utilized to insure spurious oscillations are not being generated by the subject signal booster. This test shall be conducted at time of system acceptance.

PART 3 - EXECUTION

3.1 INSPECTION AND ACCEPTANCE

A. Examine all surfaces and contiguous elements to receive work of this section and correct, as part of the Work of this Contract, any defects affecting installation. Commencement of work will be construed as complete acceptability of surfaces and contiguous elements.

3.2 WORK COORDINATION AND JOB OPERATIONS

A. Equipment shall not be installed in congested and possible problem areas without first coordinating installation of same with other trades. Relocate electrical equipment installed in congested or problem areas should it interfere with the proper installation of equipment to be installed by other trades.

B. Particular attention shall be directed to coordination of lighting fixtures and other electrically operated equipment requiring access which is to be installed in ceiling areas. Coordinate with other trades, the elevations of equipment in hung ceiling areas to insure adequate space for installation of recessed fixtures before said equipment is installed. Conflicts in mounting heights and clearances above hung ceilings for installation of recessed lighting fixtures or other electrically operated equipment requiring access shall be brought to the attention of Architect for a decision prior to equipment installation.

C. Furnish to General Contractor and other subcontractors information relative to portions of electrical installation that will affect other trades sufficiently in advance so that they may plan their work and installation.

D. Obtain from other trades information relative to electrical work which he, the Electrical Subcontractor, is to execute in conjunction with installation of other trades' equipment.

E. Lighting fixtures in mechanical spaces or utility/ storage rooms shall only be installed after all mechanical equipment is in place.

3.3 PLANS AND SPECIFICATIONS

A. Plans:

1. Drawings showing layout of electrical systems indicate approximate location of raceways, outlets, and apparatus. Runs of feeders and branch circuits are schematic and are not intended to show exact routing. Final determination as to routing shall be governed by structural conditions and as indicated on the approved coordination drawings.

B. Specifications:

1. Specifications supplement drawings and provide specifics pertaining to methods and material to be used.

3.4 IDENTIFICATION

A. Equipment shall be marked for ease of identification as follows:

1. Provide screw-on nameplates on switchboards, panelboards, F.A. terminal cabinets, starters, and disconnect switches. Nameplates to be of black phenolic with white engraving. For starters and disconnect switches lettering shall be minimum of 1/4 in. high. Nameplates on panelboards shall have the following information.
   a. Line 1 - Panel designation in 1/2 in. high letters.
   b. Line 2 - Utilization voltage in 3/8 in. high letters.
   c. Line 3 - Distribution source "Fed from 1/4 in. high letters.
2. Neatly typed directory cards listing circuit designations shall be fastened inside the cover of panelboards. Spare circuits shall be penciled.
3. Provide Signage on all rooms that contain Fire alarm control equipment within it. Where a Fire alarm control panel is located within a separate room provide permanent signage that reads “ FIRE ALARM CONTROL PANEL INSIDE” with minimum 7” high by 10” width with 2-inch high block letters a 0.5” letter stroke - white letters on a contrasting red background. The sign shall be permanently attached, at normal eye level to the door leading to the fire alarm control panel(s).
4. Color coding schedules. If there is more than a single system voltage, different voltages shall have separate color codes, as previously specified. A copy of the color code schedule shall be affixed to each secondary switchboard and distribution panel and shall be of the phenolic nameplate type as previously specified. A typewritten color code schedule shall also be affixed, under plastic, inside each panelboard door.

5. Outlet boxes both concealed and exposed shall be identified as to panel origination and circuit number by means of fibre pen on the inside of coverplate.
6. Special system outlet boxes concealed above hung ceilings shall be identified as to system by spray painting during roughing. The following systems shall be identified.
    a. Fire Alarm - red.
    b. Normal/Emergency - yellow.
    c. Security - blue.
    d. Sound - green.
7. Wiring device plates on devices connected to normal-emergency circuits shall be red in color.
8. All conductors in boxes larger than standard outlet boxes, in all wireways, and trench headers. shall be grouped logically and be identified.
9. Grounding conductors and neutrals shall be labeled in panels, and wireways. as to circuits associated with.
10. All devices including receptacles and swtich covers shall be labled with circuit and panel designation. Label shall be phenolic with white engraving. Provide sample for approval.
11. Equipment nameplates shall include date of manufactuer.
12. Distribution Equipment: Identify major components of the distribution system (such as circuit breakers, switches, transformers, switchboards, panelboards, motor control centers) with nameplates. Nameplates on disconnect switches and control stations shall identify the equipment served.
13. Power and raceway identification:
    a. Comply with ANSI A13.1 for minimum size of letters for legend and for minimum length of color field for each raceway size.
    b. Colors for Raceways Carrying Circuits at 600 V or Less:
    c. Black letters on an orange field.
    d. Legend: Indicate voltage and system or service type (Power, Lighting, Emergency, Control).
    e. Colors for Raceways Carrying Circuits at More Than 600 V:
    f. Black letters on an orange field.
    g. Legend: "DANGER CONCEALED HIGH VOLTAGE WIRING" with 3-inch- high letters.
    h. Self-Adhesive Vinyl Labels for Raceways Carrying Circuits at 600 V or Less: Preprinted, flexible label laminated with a clear, weather- and chemical-resistant coating and matching wraparound adhesive tape for securing ends of legend label.
    i. Tape and Stencil for Raceways Carrying Circuits More Than 600 V: 4-inch- wide black stripes on 10-inch centers diagonally over orange background that extends full length of raceway. Stop stripes at legends.
    j. Metal Tags: Brass or aluminum, 2 by 2 by 0.05 inch, with stamped legend, punched for use with self-locking cable tie fastener.

k. Write-On Tags: Polyester tag, with corrosion-resistant grommet and cable tie for attachment to conductor or cable. Marker for Tags: Permanent, waterproof, black ink marker recommended by tag manufacturer.

14. Armored metal clad cable identification:
    a. Self-Adhesive Vinyl Labels: Preprinted, flexible label laminated with a clear, weather- and chemical-resistant coating and matching wraparound adhesive tape for securing ends of legend label.
    b. Self-Adhesive Vinyl Tape: Colored, heavy duty, waterproof, fade resistant; 2 inches wide; compounded for outdoor use.
15. Power and Control Cable identification:
    a. Comply with ANSI A13.1 for minimum size of letters for legend and for minimum length of color field for each raceway and cable size.
    b. Self-Adhesive Vinyl Labels: Preprinted, flexible label laminated with a clear, weather- and chemical-resistant coating and matching wraparound adhesive tape for securing ends of legend label.
    c. Metal Tags: Brass or aluminum, 2 by 2 by 0.05 inch, with stamped legend, punched for use with self-locking cable tie fastener.
    d. Write-On Tags: Polyester tag, with corrosion-resistant grommet and cable tie for attachment to conductor or cable. Marker for Tags: Permanent, waterproof, black ink marker recommended by tag manufacturer.
    e. Snap-Around Labels: Slit, pretensioned, flexible, preprinted, color-coded acrylic sleeve, with diameter sized to suit diameter of raceway or cable it identifies and to stay in place by gripping action.
16. Conductor Identification materials:
    a. Color-Coding Conductor Tape: Colored, self-adhesive vinyl tape not less than 3 mils thick by 1 to 2 inches wide.
    b. Self-Adhesive Vinyl Labels: Preprinted, flexible label laminated with a clear, weather- and chemical-resistant coating and matching wraparound adhesive tape for securing ends of legend label.
    c. Snap-Around Labels: Slit, pretensioned, flexible, preprinted, color-coded acrylic sleeve, with diameter sized to suit diameter of raceway or cable it identifies and to stay in place by gripping action.
    d. Marker Tapes: Vinyl or vinyl-cloth, self-adhesive wraparound type, with circuit identification legend machine printed by thermal transfer or equivalent process.
    e. Write-On Tags: Polyester tag, with corrosion-resistant grommet and cable tie for attachment to conductor or cable. Marker for Tags: Permanent, waterproof, black ink marker recommended by tag manufacturer.
17. Underground warning tape:
    a. Recommended by manufacturer for the method of installation and suitable to identify and locate underground electrical and communications utility lines but not less than 4 mils thick and 6 inches wide.

b. Printing on tape shall be permanent and shall not be damaged by direct-burial service.

c. Tape material and ink shall be chemically inert, and not subject to degrading when exposed to acids, alkalis, and other destructive substances commonly found in soils.

d. Color and Printing:

1) Comply with ANSI Z535.1 through ANSI Z535.5.

2) Inscriptions for Red-Colored Tapes: ELECTRIC LINE, HIGH VOLTAGE.

3) Inscriptions for Orange-Colored Tapes: TELEPHONE CABLE, CATV CABLE, COMMUNICATIONS CABLE, OPTICAL FIBER CABLE.

18. Warning labels and signs:

a. Self-Adhesive Warning Labels: Factory-printed, multicolor, pressure-sensitive adhesive labels, configured for display on front cover, door, or other access to equipment unless otherwise indicated.

b. Baked-Enamel Warning Signs:

c. Preprinted aluminum signs, punched or drilled for fasteners, with colors, legend, and size required for application. Nominal size, 7 by 10 inches.

d. Metal-Backed, Butyrate Warning Signs:

e. Weather-resistant signs, non-fading, preprinted, cellulose-acetate butyrate signs with galvanized-steel backing; and with colors, legend, and size required for application. Nominal size 10 by14 inches.

f. Safety signs shall warn of potential electrical hazard and shall include, but are not limited to, the following legends:

g. Multiple power source warning.

h. Workspace clearance warning.

i. Potential electric arc flash hazard.

19. Equipment identification labels:

a. Adhesive Film Label: Machine printed, in black, by thermal transfer or equivalent process. Minimum letter height shall be 3/8 inch.

b. Adhesive Film Label with Clear Protective Overlay: Machine printed, in black, by thermal transfer or equivalent process. Minimum letter height shall be 3/8 inch. Overlay shall provide a weatherproof and UV-resistant seal for label.

c. Engraved, Laminated Acrylic or Melamine Label: Punched or drilled for screw mounting. White letters on a dark-gray background. Minimum letter height shall be 3/8 inch.

20. Cable ties:

a. General-Purpose Cable Ties: Fungus inert, self-extinguishing, one piece, self-locking, Type 6/6 nylon.

b. Minimum Width: 3/16 inch.

c. Color: Black except where used for color-coding.

d. UV-Stabilized Cable Ties: Fungus inert, designed for continuous exposure to exterior sunlight, self-extinguishing, one piece, self-locking, Type 6/6 nylon.

e. Plenum-Rated Cable Ties: Self-extinguishing, UV stabilized, one piece, self-locking. UL 94 Flame Rated.

21. Verify identity of each item before installing identification products. Coordinate names, abbreviations, colors, and other designations used in electrical identification work with corresponding designations specified or indicated. Install numbers, lettering, and colors as approved in submittals and required by code.

22. Location: Install identification materials and devices at locations for most convenient viewing without interference with operation and maintenance of equipment.

23. Apply identification devices to surfaces that require finish after completing finish work.

24. Self-Adhesive Identification Products: Clean surfaces before application, using materials and methods recommended by manufacturer of identification device.

25. Attach signs and plastic labels that are not self-adhesive type with mechanical fasteners appropriate to the location and substrate.

26. System Identification Color-Coding Bands for Raceways and Cables: Each color-coding band shall completely encircle cable or conduit. Place adjacent bands of two-color markings in contact, side by side. Locate bands at changes in direction, at penetrations of walls and floors, at 50-foot maximum intervals in straight runs, and at 25-foot maximum intervals in congested areas.

27. Aluminum Wraparound Marker Labels and Metal Tags: Secure tight to surface of conductor or cable at a location with high visibility and accessibility.

28. Cable Ties: For attaching tags. Use general-purpose type, except as listed below:

29. Outdoors: UV-stabilized nylon.

30. In Spaces Handling Environmental Air: Plenum rated.

31. Underground-Line Warning Tape: During backfilling of trenches install continuous underground-line warning tape directly above line at 6 to 8 inches below finished grade. Use multiple tapes where width of multiple lines installed in a common trench or concrete envelope exceeds 16 inches overall.

32. Renovation Projects: For alterations and additions to existing facilities, use existing identification system. Where systems have not been standardized, use the identifying and marking system specified in this standard.

33. Distribution Equipment: Identify major components of the distribution system (such as circuit breakers, switches, transformers, switchboards, panelboards, motor control centers) with nameplates. Nameplates on disconnect switches and control stations shall identify the equipment served.

34. Identification Schedule:

    a. Accessible Raceways and Metal-Clad Cables, 600 V or Less, for service, feeder, and branch circuits more than 30A and 120V to ground: Identify with self-adhesive vinyl label applied at 10-foot maximum intervals.

b. Power-Circuit Conductor Identification, 600 V or Less: Identify conductors in the panels, pull and junction boxes, manholes, handholes.
   1) Color-Coding for Phase and Voltage Level Identification, 600 V or Less: Use colors for ungrounded service, feeder and branch-circuit conductors as specified in Division 26 Section “Low-Voltage Power Conductors”.
      a) Factory applied continuous color coding for conductors No.8 AWG and smaller.
      b) Field-applied, color coding conductor tape: For conductors No.6 AWG and larger. Apply in half-lapped turns for a minimum distance of 6 inches from terminal points and in boxes where splices or taps are made.
   2) Lighting and Receptacle Outlet Boxes: Identify with the panel and circuit number.

c. Power-Circuit Conductor Identification, above 600 V: For conductors in the vaults, pull and junction boxes, manholes and handholes, use write-on tags.

d. Auxiliary Electrical Systems Conductor Identification: Identify field-installed alarm, control, and signal connections.

e. Identify conductors, cables, and terminals in enclosures and at junctions, terminals, and pull points. Identify by system and circuit designation.

f. Terminal Blocks: Attach numbered nameplates to terminal blocks which require identification numbers; use the designations shown on the wiring diagrams. Install nameplate at the top of vertically mounted terminal blocks and at the end of horizontally mounted terminal blocks. Indicate the individual terminal point designation shown on the wiring diagrams.

g. Use system of marker tape designations that is uniform and consistent with system used by manufacturer for factory-installed connections.

h. Workspace Indication: Install floor marking tape to show working clearances in the direction of access to live parts. Workspace shall be as required by NFPA 70 unless otherwise indicated. Do not install at flush-mounted panelboards and similar equipment in the finished spaces.

i. Warning Labels for Indoor Cabinets, Boxes, and Enclosures for Power and Lighting: Apply warning, caution, and instruction signs where required by the referenced Electrical code, or where reasonably required to assure safe operation and maintenance of electrical systems and of the items to which they connect. Install self-adhesive warning labels or baked-enamel warning signs with approved legend where instructions or explanations are needed for system or equipment operation. Install metal-backed, butyrate warning signs for outdoor items.

j. Emergency Operating Instruction Signs: Install instruction signs with white legend on a red background with minimum 3/8-inch high letters for emergency instructions at equipment used for power transfer, load shedding and other emergency operations.

k. Safety sign for the switchboards and panelboards: Provide a sign to warn qualified persons of potential electric arc flash hazard.

l. All electrical distribution equipment and mechanical/plumbing/fire protection equipment fed from the electrical distribution system shall contain in addition to the identification requirements listed in this section shall be labelled where they are fed from. For example Distribution panel 4DP1A is fed from MSB-1A, its label shall be "4DP1A fed from MSB-1A" submit full labeling scheme for review and approval.

m. Equipment Identification Labels: On each unit of equipment, install unique designation label that is consistent with wiring diagrams, schedules, and the Operation and Maintenance Manual. Apply labels to the disconnect switches and protection equipment, control panels, control stations, terminal cabinets, and racks of each system. Systems include power, lighting, control, communication, signal, monitoring, and alarm systems unless equipment is provided with its own identification.

1) Labeling Instructions:

a) Indoor Equipment: Self-adhesive, laminated acrylic or melamine label.

b) Outdoor Equipment: Engraved, laminated acrylic.

c) Unless provided with self-adhesive means of attachment, fasten labels with appropriate mechanical fasteners that do not change the NEMA or NRTL rating of the enclosure.

2) Panelboards: Typewritten directory of circuits in the location provided by panelboard manufacturer. Panelboard identification shall be engraved laminated acrylic. Panelboard directories shall identify the load name and location (i.e. AHU-1, Room #, FCU-1, Room #).

3.5 PROTECTION AND CLEANUP

A. Protection:

1. Materials and equipment shall be suitably stored and protected from weather.
2. During progress of work, pipe and equipment openings shall be temporarily closed so as to prevent obstruction and damage.
3. Be responsible for maintenance and protection of material and equipment until final acceptance.

B. Cleanup:

1. Keep job site free from accumulation of waste material and rubbish. Remove all rubbish, construction equipment, and surplus materials from site and leave premises in a clean condition.
2. At completion, equipment with factory finished surfaces shall be cleaned and damaged spots touched up with the same type paint applied at factory.
3. Particular attention is called to Section 110-12(c) of the NEC, which requires that internal parts of electrical equipment not be contaminated by construction operations.

3.6 PORTABLE OR DETACHABLE PARTS

A. Retain possession of and be responsible for spare parts, portable and detachable parts, and other removable portions of installation including fuses, keys, locks, blocking clips, inserts, lamps, instructions, drawings, and other devices or materials that are relative to and necessary for proper operation and maintenance of the system until final acceptance, at which time such parts shall be installed or turned over to the Owner, as the case may be.

B. SAFETY PRECAUTIONS

1. Provide proper guards, signage, and other necessary construction required for prevention of accidents and to insure safety of life and property. Remove any temporary safety precautions at completion.

3.7 MOUNTING HEIGHTS

A. All electrical equipment shall be mounted at the following heights unless noted or detailed otherwise on drawings. Notes on architectural drawings shall supersede those noted below or detailed on the electrical drawings. If mounting height of an electrical component is questionable, obtain clarification from Architect before installation.

1. Duplex convenience outlets, microphone outlets, and telephone outlets - 18 inches.
2. Light switches, pushbutton stations, HOA switches, and all other toggle or control switches for the operation of heating, ventilating, and air conditioning, plumbing, and general service - 48 inches.
3. Clock outlets - 84 inches.
4. Fire alarm pull stations - 48 inches.
5. Fire alarm audio visual signals - 80 inches or 6 inches below ceiling, whichever is lower.
6. Panelboards for lighting, power, telephone, and other auxiliary systems – 78 in. to top.
7. Equipment located in lobbies shall be located as detailed on architectural drawings.
8. All receptacles, light switches, fire alarm signals, and clocks sharing a common location shall be symmetrically arranged.
9. Exterior and interior wall brackets shall be as detailed on architectural drawings.

B. Mounting heights given are from finished floor to centerline. In the case of a raised floor, surface of raised floor is the finished floor.

3.8 WORKMANSHIP AND INSTALLATION METHODS

A. Work shall be installed in first-class manner consistent with best current trade practices. Equipment shall be securely installed plumb and/or level. Flush-mounted outlet boxes shall have front edge flush with finished wall surface. No electrical equipment shall be supported by work of other trades. Cable systems shall be supported and not draped over ducts and piping or laid on ceiling suspension members. Lighting fixtures shall be installed to agree with Architects reflected ceiling plans and the requirement of 230548 Vibration Control and Seismic Restraints.

B. Supports:

1. Support work in accordance with best industry practice and by use of standard fittings.
2. In general, walls and partitions will not be suitable for supporting weight of panelboards, dry type transformers and the like. Provide supporting frames or racks extending from floor slab to structure above.
3. Provide supporting frames or racks for equipment, intended for vertical surface mounting in free standing position where no walls exist.
4. Supporting frames or racks shall be of standard angle, standard channel or specialty support system steel members, rigidly bolted or welded together and adequately braced to form a substantial structure. Racks shall be of ample size to assure a workmanlike arrangement of equipment.
5. Provide 3/4 in. thick painted plywood mounting surfaces in all electric and telephone areas and for all equipment on free standing racks. All plywood shall be fire retardant and painted both sides and edges with 2 coats of white paint.
6. No work for exposed installations in damp locations shall be mounted directly on any building surface. In such locations, flat bar members or spacers shall be used to create a minimum of ¼ in. air space between building surfaces and work.
7. Nothing (including outlet, pull and junction boxes and fittings) shall depend on electric raceways or cables for support. All outlet, pull, and junction boxes shall be independently supported.
8. Nothing shall rest on, or depend for support on, suspended ceiling or its mounting members.
9. Support surface or pendant mounted lighting fixtures:
   a. From outlet box by means of an interposed metal strap, where weight is less than five pounds.
   b. From outlet box by means of a hickey or other direct threaded connection, where weight is from five to fifty pounds.
   c. Directly from structural slab, deck or framing member, where weight exceeds fifty pounds.
   d. Pendant lighting fixtures shall be supported by threaded rods in non-public areas and by manufacturers standard tube hangers with swivel aligner and canopy in public areas. Provide non-standard pendant lengths where required to mount fixtures at elevations either called for on drawings or as shown in architectural elevations.

10. Support recessed lighting fixtures directly from structural slabs, decks or framing members, by means of jack chain or air craft cable, one at each end of fixture at opposite corners.
11. Where support members must of necessity penetrate air ducts, provide airtight sealing provisions which allow for a relative movement between the support members and the duct walls.
12. Provide channel sills or skids for leveling and support of all floor mounted electrical equipment.
13. Where permitted loading is exceeded by direct application of electrical equipment to a slab or deck, provide proper dunnage to distribute the weight in a safe manner.
14. Support metallic raceways by either running within steel frame or hung from the building frame. Anything hung from building frame shall be attached with metallic fasteners.
15. electrical subcontractor to provide "in process" panel schedule sheet while loads are being connected. Electrical subcontractor to review phase loading at panelboards at the end of work and prior to closeout to ensure balanced loading. Provide a final typed panel schedule at completion of work.

C. Fastenings:

1. Fasten electric work to building structure in accordance with the best industry practice.
2. Where weight applied to attachment points is 100 pounds or less, fasten to building elements of:
   a. Wood -- with wood screws.
   b. Concrete and solid masonry -- with bolts and expansion shields.
   c. Hollow construction -- with toggle bolts.
   d. Solid metal -- with machine screws in tapped holes or with welded studs.
3. Where weight applied to attachment points exceeds 100 pounds, fasten as follows:
   a. At field poured concrete slabs, provide inserts with 18 in.minimum length slip-through steel rods, set transverse to reinforcing steel.
   b. Where building is steel framed, utilize suitable auxiliary channel or angle iron bridging between structural steel elements to establish fastening points. Bridging members shall be suitably welded or clamped to building steel. Provide threaded rods or bolts to attach to bridging members.
4. Floor mounted equipment shall not be held in place solely by its own dead weight. Provide floor anchor fastenings. Floor mounted equipment over 72 inches in height shall also be braced to nearest wall or overhead structural elements.
5. For items which are shown as being mounted at locations where fastenings to the building construction element above is not possible, provide suitable auxiliary channel or angle iron bridging to building structural elements.
6. Fastenings for metallic raceways using the fastening as support shall be of the metallic type. Fastenings to hold raceways or cables in place may be via traps.

7. Refer to section 230548 Vibration Control and Seismic Restraints for additional requirements.

D. General Raceway Installation:

1. Install the various types of raceways in permitted locations as previously specified. All raceways shall be run concealed. Consult Architect for instruction for raceways which must be exposed in public spaces.
2. Raceways for normal emergency or emergency only wiring cannot contain other conductors.
3. Raceways shall be properly aligned, grouped, and supported in accordance with code. Exposed raceways shall be installed at right angles to or parallel with structural members. Concealed raceways may take most direct route between outlets.
4. Raceways run on trapeze hangers shall be secured to the trapeze.
5. Raceways shall be continuous and shall enter and be secured to all boxes in such a manner that each system shall be electrically continuous from service to all outlets. Provide grounding bushings and bonding jumpers where raceways attach to painted enclosures or terminate below equipment.
6. Where raceways enter boxes, cabinets, tap boxes, other than those having threaded hubs, a standard locknut shall be used on the outside and locknut and bushing on the inside.
7. Where raceways terminate below equipment and there is no direct metal to metal continuity, provide grounding bushings on raceways and interconnect with equipment grounding conductor.
8. All empty raceways shall be provided with a pull wire.
9. All raceway sleeves, stub-ups, or stub-outs, where not connected to a box or cabinet, shall be terminated with a bushing.
10. All raceway joints shall be made up tight and no running threads will be permitted.
11. Where raceways are cut, the inside edge shall be reamed smooth to prevent injury to conductors.
12. All vertical raceways passing through floor slabs shall be supported.
13. Raceways shall not be installed in concrete slabs above grade or below waterproofed slabs.
14. Electric raceways and/or sleeves passing through floors or walls shall be of such size and in such location as not to impair strength of construction. Where raceways alter structural strength or the installation is questionable, the structural engineer shall be contacted for approval.
15. Raceways shall not run directly above or below heat producing apparatus such as boilers, nor shall raceways run parallel within 6 inches of heated pipes. Raceways crossing heated pipes shall maintain at least a 1 inch space from them.
16. Raceways shall be installed in such a manner as to prevent collection of trapped condensates, and all runs shall be arranged to drain.
17. Raceways passing between refrigerated and non-refrigerated spaces and those penetrating enclosures with air movement shall be provided with seals.

18. Raceways feeding fire and jockey pumps shall be rigid metal conduit either run below slab or inside 2 hour rated enclosure. Final connections to motors shall be liquidtite flexible conduit.
19. Where two alternate wiring methods interconnect such as EMT to flexible metal conduit, an outlet box shall be provided.
20. All empty raceways entering building and all sleeves or core drilled openings through floors shall be sealed.
21. Each exterior raceway or assembly in a ductbank shall be provided with continuous warning tape installed 12 inches above raceway or ductbank.
22. Underground rigid non-metallic raceways where allowed and run as a ductbank encased in concrete shall be installed with plastic spacers to ensure a separation of 3 inches between raceways. Top of ductbanks shall be 30 inches below grade, unless otherwise detailed.
23. Elbows and extensions of rigid non-metallic raceway systems which penetrate slabs shall be rigid or intermediate metal conduit.
24. Raceways used for transformer connections shall be flexible type and shall contain a grounding conductor.
25. Raceways entering building through foundation wall into a basement area shall be provided with wall entrance seals or with other acceptable waterproofing method.
26. Underground non-metallic raceways shall be fully surrounded by a selected backfill to prevent more than the desired deflection and, in power raceways is needed to provide room for heat dissipation and good compaction of backfill. Separation Between Direct-Buried, Non-encased Ducts: 3 inches minimum for like services, and 12 inches minimum between power and signal ducts, unless shown otherwise on the drawings. Raceways formation for non-encased ducts shall be built up layer by layer. After each layer is placed, the selected backfill shall be placed over it to the specified depth. This fill should be spread evenly and compacted to provide continuous support for the next tier of raceways. Any temporary spacers used should be removed from each layer of raceway as soon as backfill is completed in that layer. A maximum of 9 conduits shall be grouped in the same trench unless otherwise noted on the drawings.
27. Comply with NECA 1 for installation requirements applicable to products specified in Part 2 except where requirements on Drawings or in this Article are stricter.
28. Run conduit concealed in finished areas above suspended ceilings, in wall spaces. Exposed conduit runs in finished areas require Architect's approval. Properly group conduit runs. Install conduit parallel to walls, structure and ceilings, and support with proper hangers and clamps. Running conduits at the bottom of structural members in exposed conditions is not allowed. Check door swings before installing back boxes for switches and receptacles.
29. Where conduit passes through a building expansion joint, use weatherproof, telescopic type expansion fittings which permit at least 4 inches of movement.
30. Form bends in conduit by means of a conduit bending machine or by an approved hickey. To fasten conduit to outlet boxes, cabinets, use locknuts and insulated throat bushings of compatible material.

31. Cut conduit ends square, thread conduit, and ream to remove burrs and sharp edges. Field threads shall be of the same type and have the same effective length as factory cut threads. Turns, wherever required in exposed conduit runs, shall be made by the use of factory-made bends, or field-made bends that meet the requirements of this Section and Electric Code. In the event of a multiplicity of conduits making the same turn, a steel junction box with a removable steel cover may be used. Offsets and bends for changes in elevation of exposed conduit runs shall be made at walls or beams and not in open spaces between walls or beams. Rout conduits required to avoid interfere with the operation or maintenance of equipment.
32. Plug or cap conduit ends as soon as conduit is installed, to prevent entrance of moisture or other debris during construction. Do not pull wire into any conduit until the conduit system is complete.
33. Drawings, in relation to the routing of conduits, are diagrammatic. Except where additional conduits may be required to avoid derating of branch circuits, elsewhere within this Section, the number and size of conduits and wire shall be furnished and installed as indicated by the drawings. Coordinate routing of conduits in the field with the building structure. Run conduit in straight lines parallel and perpendicular to walls, beams, and columns and with right angle bends and threaded conduit fittings. Maintain 12 inches clearance between conduit and surface with temperatures exceeding 104 degrees F.
34. Conduits passing through floors, walls and beams shall be of such size, number, and in such locations so as not to impair the strength of the construction.
35. Rout raceways in ceiling spaces in an orderly and organized manner, and to eliminate or minimize the number of junction boxes required. Support and secure conduits by means of rods, clamps and other conduit support devices approved by the Architect. Do not use wire to support conduits.
36. Where rigid metal conduit is threaded in the field, use a standard conduit cutting die providing 3/4 inch taper per foot.
37. Conduit and EMT runs shall be mechanically and electrically continuous from service entrance to outlets. Secure conduit to cabinet, junction box, pull box or outlet box with locknut outside and bushing inside, or with liquid-tight, threaded, self-locking, cold-weld wedge adapter. Locknuts and bushings or self-locking adapters will not be required where conduits are screwed into tapped connections. Before installing conductions, protect vertical conduit runs that terminate in bottoms of wall boxes or cabinets from entrance of foreign material.
38. Size rigid steel conduit, EMT and flexible metallic conduit required by the referenced Electrical Code, except as otherwise specified or shown on the drawings. Check raceway sizes to determine that equipment grounding conductor fits in same raceway with phase and neutral conductors to meet Massachusetts Electrical Code percentage of fill requirements.
39. Where conduit is secured rigidly on opposite sides of building expansion joints, and where runs of exposed conduit are long and subject to stress, provide expansion fittings capable of safely deflecting and expanding to twice the distance of structural movement. Provide separate external copper bonding jumper secured with grounding straps on each end of fitting.

40. Install a pull or junction box every 100 feet of straight conduit run, and wherever there is an equivalent of four 90 degree elbows or a total of 360 degree bend. Install no more than the equivalent of three 90-degree bends in any conduit run except for communications conduits, for which fewer bends are allowed.
41. Install sealing fittings at following points, and elsewhere as shown:
    a. Where conduits enter or leave hazardous areas equipped with explosion proof lighting fixtures, switches, receptacles, and other electrical devices.
    b. Where conduits pass from warm to cold locations.
42. Pull cords: In each empty raceway, provide nylon fishing line having tensile strength not less than 200 lbs, or provide No. 14 AWG steel wire. Label each end of each line or wire with a securely attached tag which indicates the location of the other end.
43. Liquid-tight type flexible conduits installed in the air-handling plenum space shall be with a plenum- rated outer jacket.
44. Threaded Conduit Joints, Exposed to Wet, Damp, Corrosive, or Outdoor Conditions: Apply listed compound to threads of raceway and fittings before making up joints. Follow compound manufacturer's written instructions.

E. General Outlet Box Installation:

1. Boxes shall be set flush with finish surface and provided with proper type extension rings or plaster covers. Thru the wall boxes are not permitted. Check device or fixture to be mounted to box to ensure box orientation is proper.
2. In addition to boxes shown, install additional boxes where needed to prevent damage to cables and wires during pulling-in operation.
3. Plug unused openings on all remove knockouts.
4. Where required for horizontal and vertical alignment of boxes in stud partitions, bar hangers spanning two studs shall be used. Device boxes for insertion type receptacles shall be provided with far side box supports where there are less than two entering nonflexible raceways, and where bar rangers are not provided.
5. Boxes flush mounted in fire rated partitions and on opposite sides of the partition shall be separated by a distance of 24 inches in accordance with UL listing for the box.
6. Locations of outlets indicated on drawings are approximate. For items exposed to view, refer to architectural drawings and coordinate locations with masonry joints, panel joints, ceiling grids, and structural members.
7. In case of conflict with standard mounting heights and device alignment, consult Architect prior to roughing.
8. Check all door swings on architectural drawings to ensure lighting switches are installed on strike side of door.
9. The right to make any reasonable change in location of outlets prior to roughing is reserved by Architect. "Reasonable change" shall be interpreted as movement within 10 feet of location shown.
10. Obtain dimensioned plan from Architect for floor outlets.

11. Outlet boxes for use where surface metal raceways are allowed shall be of a type specifically designed to be used with such surface metal raceway systems.

F. Conductor Installation:

1. No conductors shall be pulled into individual raceways until such raceway system is complete and free of debris. No harmful lubricants shall be used to ease pulling.
2. All conductors shall be wired so that grounded conductor is unbroken; switches in all cases being connected in ungrounded conductor.
3. Connections throughout the entire job shall be made with solderless type devices of approved design satisfactory to Inspector of Wires.
4. All taps and splices shall be insulated equal to that of conductor insulation.
5. All conductors of each feeder in pull boxes and wireways. shall be grouped, tied together, supported, and identified.
6. All conductors in panelboards and other wiring enclosures shall be neatly formed and grouped.
7. All conductors of emergency only and/or normal/emergency shall be run in separate raceway systems to final outlet box.
8. Provide support for conductors in vertical raceways in accordance with Article 300-19.
9. Strip insulation from conductors with approved tools and only of sufficient length for proper termination. Cutting of conductor stranding is unacceptable.
10. Taps from paralleled conductors shall be of a type which tap each conductor, such as ILSCO "PTA" series.
11. Grounding conductors are to be identified as to associated power circuits.

G. Type MC Cable Installation:

1. Where cable is permitted under the products section, the installation of same shall be done in accordance with code and the following:
   a. Cable shall be supported in accordance with code. Tie wire is not an acceptable means of support. Horizontally run cable supports such as Caddy WMX-6, and clamps on vertical runs such as Caddy CJ6 shall be used. Where cables are supported by the structure and only need securing in place, then ty-raps will also be acceptable. Ty-raps are not acceptable as a means of support. All fittings, hangers, and clamps for support and termination of cables shall be of types specifically designed for use with cable, i.e., romex connectors not acceptable.
   b. Armor of cable shall be removed with rotary cutter device equal to roto-split by Seatek Co., not with hacksaw.
   c. Use split "insuliner" sleeves at terminations.
   d. Any cable system used in conjunction with isolated ground circuits shall have both an isolated ground conductor and an equipment ground conductor.

H. Stranded Conductor Installation:

1. If Contractor selects stranded conductors for #10 AWG and smaller, terminate such conductors as follows:

   a. No stranded conductor may be terminated under a screwhead. Provide insulated terminal lugs for all screw connections equal to Thomas & Betts "STA-KON" type RC with forked tongue and turned up toes. Installation of lugs shall be done with compression tool such as T&B WT-145C which prevents opening of tool until full compression action is completed.

   b. Backwired wiring devices shall be of clamp type; screw tightened. Force fit connections not allowed.

2. Stranded conductors will not be allowed for fire alarm work.

I. Accessibility:

1. Electrical equipment requiring service or manual operation shall be accessible.

2. Work switches for equipment within accessible hung ceiling spaces, such as fan powered terminal boxes, shall be located at terminal box, and so located so as to be accessible.

J. Vibration Elimination: All equipment connections to rotating equipment or equipment capable of vibration shall be made up by flexible raceways.

K. Wiring Device Gaskets: Provide wiring device gaskets at coverplates where device is mounted in wall separating conditioned and non-conditioned spaces.

3.9 FEEDER CIRCUITS

A. Provide feeders as called for on the drawings.

B. Feeders shall be defined as any circuit originating from the main building switchboard and/or distribution panels.

C. All feeder conductors shall be continuous from origin to panel or equipment termination without splicing.

D. All feeders shall be conductors pulled into raceways. Cable systems are not allowed for feeders unless specifically indicated.

3.10 BRANCH CIRCUITS

A. Provide all branch circuit wiring and outlets for a complete and operating system. The system shall consist of insulated conductors connected to the panelboards and run in raceways or as cable systems if permitted under products section, to the final outlet and shall include outlet boxes, supports, fittings, receptacles, plates, fuses, for a fully functional system.

B. Provide dedicated neutrals for all lighting circuits and all circuits originating from panelboards fed from K-rated transformers.

C. Physical arrangement of branch circuit wiring shall correspond to circuit numbering on drawings. Combining of circuits and raceways will be allowed up to a 3 phase, 4 wire circuit or 3 phase 6 wire (dedicated neutrals) in a single raceway. Any combination of homeruns such as this, however, shall be indicated on record drawings. When a common grounded conductor is used for more than one circuit, the arrangement shall be such that a receptacle, fixture, or other device may be removed or disconnected without disconnecting the grounded conductor for other circuits. Ground fault circuit breakers and isolated ground outlets shall be wired with separate neutrals and separate grounding conductors per circuit. A consistent phase orientation shall be adhered to throughout project at terminations.

D. Circuits feeding three phase equipment shall not be combined into common raceways, unless specifically indicated.

E. All wiring in panelboards and cabinets shall be neatly formed and grouped.

3.11 FIRESTOP SYSTEMS:

A. General: Install firestop systems at all new and existing fire-rated construction where penetrated by the Work of this Section.

B. Refer to Section 078400 - Firestopping, for all installation requirements for maintaining integrity of fire-rated construction at penetrations.

3.12 WATERPROOFING

A. Waterproof all openings in slabs and walls.

3.13 CUTTING AND PATCHING

A. Core drilling, up to and including 8” in diameter, and cutting equivalent to or less than the cross-sectional equivalent of 8” square shall be performed by the Electrical Sub-contractor. Sleeves and box-outs shall be provided by the Electrical Contractor regardless of size. Cutting of surfaces, including core drilling of walls and slabs, shall be done by Electrical Subcontractor. Openings through new wall surfaces will be provided by General Contractor if Electrical Subcontractor gives suitable notice as erection of surface proceeds. If suitable notice is not given, Electrical Subcontractor shall then be responsible for cost of corrective work required.

B. Notify Masonry Sub-Contractor of exact locations and sizes for openings required in masonry, to be executed under Section 042000 – Unit Masonry, utilizing lintels furnished per Section 055000 – Metal Fabrications.

C. Cut openings in new and existing non-masonry construction where required for penetrations. All cutting shall conform to the requirements of Section 017329 – Cutting and Patching, and 024119 – Demolition.

D. Refer to Section 024119 – Demolition for restrictions on all alterations to structural elements.

E. Patching will be provided by the trade responsible for the surface to be patched.

3.14 ELEVATOR COORDINATION

A. Elevator Electrical Work:

1. Several items pertaining to elevator electrical system shall be provided by Electrical Subcontractor as follows:

   a. Power source to elevator machine room including fused disconnect switch and wiring between disconnect switch and controller for each elevator.

   b. Power source to elevator machine room including fused disconnect switch (120 volt) for elevator signal system and cab light for each cab.

   c. Light, switch, and GFCI receptacle in each pit.

   d. Light, switch, and GFCI receptacle in machine room.

   e. Junction box in machine room with five control modules from fire alarm system for elevator recall to prevent cab opening on a fire floor.

   f. Junction box in machine room for cab telephone with one 1 in. conduit with (2) CAT 6 telephone cables to main telephone demarcation backboard.

   g. Dedicated 120V 20A/1P circuit receptacle and fused disconnect switch for communications equipment.

   h. Power to automatic damper in hoistway penthouse louver.

3.15 MECHANICAL SYSTEM COORDINATION

A. The Mechanical System Subcontractor will be providing various items of mechanical services equipment and control apparatus. Electrical Subcontractor shall furnish disconnect switches and starters and connect up power wiring to this equipment.

B. The Mechanical and Electrical Subcontractor shall closely coordinate their respective portions of work.

C. If, due to local regulations, electric heating equipment furnished by the mechanical systems subcontractor is required to be installed by licensed electricians in order to allow connection by Electrical Subcontractor's licensed electricians, it will then be Mechanical Subcontractor's responsibility to engage and pay for services of such licensed electricians.

D. Power wiring to be provided by Electrical Subcontractor is the line voltage power supply wiring. Control wiring is responsibility of Mechanical System Subcontractor unless specifically indicated on electrical drawings, or in this Division of the specifications. Temperature Control Subcontractor shall refer to electrical drawings for location of all magnetic starters.

E. 120 volt control wiring source to the temperature control panel is the responsibility of Electrical Subcontractor.

3.16 DISTRIBUTION EQUIPMENT TESTING

A. All dry-type transformers, individual motor starters, switchboard and main distribution panels, motor controls, motor control centers, feeder conductors, and emergency systems shall be tested in accordance with the following. In general, all

tests shall be done in accordance with the 2013 Acceptance Testing Specifications of the International Electrical Testing Association.

B. The Testing Subcontractor may be an independent contractor or a manufacturer of the equipment, which is to be tested.

C. Test report forms, delineating tests to be made, and method of recording same shall be submitted prior to commencing work. Test reports when submitted shall include interpretation of results and recommendation for any corrective work required.

D. Switchboards and Main Distribution Panels:

1. Visual Inspection:
   a. Check for foreign material within bus enclosure.
   b. Check for missing hardware.
   c. Inspect entire assemblies for transit damage or factory defects.
   d. Check for all bus dimensions and bracing per specifications.
   e. Check ratings of current transformers and potential transformers.
   f. Check ratings of all protective relays per drawings.
2. Physical Inspection:
   a. Torque all bus hardware to proper tension.
   b. Circuit breaker interlocks all work properly.
   c. All doors and hinged panels open and close properly.
   d. Relay blocking removed from all control and protective relays.
   e. All circuit breakers operate, close and trip mechanically.
   f. Torque all feeder conductors to terminal manufacturers' recommendations.
3. Electrical Testing:
   a. Breakers operated electrically trip and close from local and remote positions.
   b. All circuit breakers calibrated to manufacturer's respective time current curves as specified.
      1) Long time pick-up amps.
      2) Long time delay tripping at 300 percent of current setting.
      3) Resets okay at 80 percent of pick-up value.
      4) Short time pick-up current.
      5) Short time delay trip time at 105 percent of setting.
      6) Instantaneous minimum pick-up current.
   c. All protective relays calibrated to manufacturer's characteristic time curves for pick-up, drop-out, instantaneous and time delay.
   d. All instruments calibrated for accuracy.
   e. Protective relay schemes to be electrically tested by primary injection of current through current transformers and the tripping of associated circuit breakers.

f. Insulation resistance tests made on all circuit breakers, line to load breaker open, line to ground breaker closed, 3 poses tested individually. Switchgear bus to be tested phase to phase and phase to ground with Megohometer type instrument. Relays also to be insulation resistance tested.

E. Transformers:

1. Visual inspection for transit damage such as broken porcelain, brazed connections broken off, core shifted on frame, winding damage, and loose parts.
2. Insulation resistance tests in accordance with U.S.A.S.I. Standard C571222 and NEMA TRI-2.055.
3. D.C. over-potential test procedures and A.C. voltage values for factory proof testing of C57.12968 and NEMA TRI-2.055. The ratio applied for converting A.C. test potential to equivalent D.C. value is 1.6.
4. Acceptance test voltage for new transformers at D.C. value will be 75 percent of equivalent A.C. voltage used for factor proof testing the value will be 65 percent.
5. Transformers shall be subjected to a ratio and polarity test to prove the polarity and winding ratio as in accordance with nameplate specifications.
6. Torque all connections to terminal manufacturers' recommendations.

F. Starters:

1. Visual inspection to determine:
   a. Shipping damage.
   b. Proper bussing and contactor sizes.
   c. Correct overload relay heater ratings. Any incorrectly sized overloads shall be replaced by the contractor who originally provided same.
2. Electrical Testing:
   a. Electrical operation of control relays, timing relay, and contactor coils.
   b. Insulation resistance test on all current carrying bus to ground and between phases.
   c. Calibration check of overload heater to ascertain tripping point and time delay at 300 percent of heater rating.

G. Conductors: All secondary service conductors and all feeder conductors from switchboards and distribution panels shall be tested.

1. Visual and mechanical inspection: Conductors to be inspected for physical damage and proper connection and sizing in accordance with single line diagram.
2. Conductor connections shall be torque tested to manufacturer's recommended values.
3. Electrical Tests: Perform insulation resistance test on each conductor with respect to ground and adjacent conductor.
4. Perform continuity test to insure proper conductor connection.

H. Emergency Systems:

1. Engine Generator - Prior to the emergency generator test specified under the emergency generator specification, the testing contractor shall perform the following:
   a. Visual and Mechanical Inspection:
      1) Inspect for physical damage.
      2) Compare nameplate rating and connection with specifications and single line diagram.
      3) Inspect for proper anchorage and grounding. Verify engine cooling and fuel system integrity.
   b. Electrical and Mechanical Tests:
      1) Perform a dielectric absorption test on generator winding with respect to ground. Determine polarization index.
      2) Perform phase rotation test to determine compatibility with load requirements.
      3) Test protective relay devices in accordance with applicable sections of these specifications.
      4) Perform dc over potential test between winding and ground.
2. Automatic Transfer Switches:
   a. Visual and Mechanical Inspection:
      1) Inspect for physical damage.
      2) Verify that the short circuit withstand rating exceeds the available short circuit duty.
      3) Compare equipment nameplate information and connections with single line diagram and report any discrepancies.
      4) Check switch to ensure positive interlock between normal and alternate sources. (Mechanical and Electrical).
      5) Check tightness of all control and power connections.
      6) Perform manual transfer operation.
      7) Ensure manual transfer warnings are attached and visible to operator.
   b. Electrical Tests:
      1) Perform insulation resistance tests phase-to-phase and phase-to-ground with switch in both source positions.
      2) Measure contact resistance in normal and alternate source position.
      3) Set and calibrate in accordance with the project electrical engineer's specifications.
         a) Voltage and frequency sensing relays.
         b) All time delay relays.
         c) Engine start and shutdown relay.
      4) Perform automatic transfer by tests.
         a) Simulating loss of normal power.
         b) Return to normal power.
         c) Simulating loss of emergency power on return to normal.
         d) Simulate all forms of single phase conditions.
      5) Monitor and verify correct operation and timing.
         a) Normal voltage sensing relays.

b) Engine start sequence.
c) Time delay upon transfer.
d) Alternate voltage sensing relays.
e) Automatic transfer operation.
f) Interlocks and limit switch function.
g) Timing delay and retransfer upon normal power restoration.
h) Engine cool down and shutdown feature.

c. E.C. shall provide an NFPA 110 test report for the generator for review and approval by engineer of record.

I. Ring out all starters, controllers, circuits and sensors in coordination with BMS checkout to ensure all components are properly connected and operable.

J. Grounding Grids or Electrodes: Measurement of resistance from ground grids or electrodes to earth to determine adequacy of grounding system in building and compliance with specifications and/or electrical code.

K. Settings of Adjustable Devices: Using the result of the fault current and coordination study specified hereinafter, the Testing Contractor shall set all adjustable devices.

L. In addition to the testing requirements of this Section refer to Section 019113 – Building Commissioning Requirements and Section 260800 - Commissioning of Electrical Systems for additional requirements.

3.17 FAULT CURRENT, ARC FLASH AND COORDINATION STUDY

A. Trade Contract:

1. Work of this Section is part of the Electrical trade contract. Refer to Section 26 00 00 for additional information about this work.

B. Related Documents:

1. Drawings and general provisions of the Contract, including General and Supplementary Conditions and Division 01 Specification Sections, apply to this Section.

C. Scope:

1. The Electrical SubContractor shall furnish short-circuit and protective device coordination studies as prepared by the manufacturer of the switchgear provided for the project.
2. The Electrical SubContractor shall furnish an Arc Flash Hazard Analysis Study per the requirements set forth in the current version of NFPA 70E -Standard for Electrical Safety in the Workplace. The arc flash hazard analysis shall be performed according to the IEEE Standard 1584 – 2002, the IEEE Guide for Performing Arc-Flash Calculations.
3. The scope of the studies shall include new distribution equipment supplied by switchgear manufacturer furnishing the electrical distribution equipment for this project.

D. References:

1. Institute of Electrical and Electronics Engineers, Inc. (IEEE):

a. IEEE 141 – Recommended Practice for Electric Power Distribution and Coordination of Industrial and Commercial Power Systems
b. IEEE 242 – Recommended Practice for Protection and Coordination of Industrial and Commercial Power Systems
c. IEEE 399 – Recommended Practice for Industrial and Commercial Power System Analysis
d. IEEE 241 – Recommended Practice for Electric Power Systems in Commercial Buildings
e. IEEE 1015 – Recommended Practice for Applying Low-Voltage Circuit Breakers Used in Industrial and Commercial Power Systems.
f. IEEE 1584 -Guide for Performing Arc-Flash Hazard Calculations

2. American National Standards Institute (ANSI):
   a. ANSI C57.12.00 – Standard General Requirements for Liquid-Immersed Distribution, Power, and Regulating Transformers
   b. ANSI C37.13 – Standard for Low Voltage AC Power Circuit Breakers Used in Enclosures
   c. ANSI C37.010 – Standard Application Guide for AC High Voltage Circuit Breakers Rated on a Symmetrical Current Basis
   d. ANSI C 37.41 – Standard Design Tests for High Voltage Fuses, Distribution Enclosed Single- Pole Air Switches, Fuse Disconnecting Switches and Accessories.
3. The National Fire Protection Association (NFPA)
   a. NFPA 70 -National Electrical Code, latest edition
   b. NFPA 70E – Standard for Electrical Safety in the Workplace

E. Submittals For Review/Approval:
1. The studies shall be submitted to the design engineer prior to receiving final approval of the distribution equipment shop drawings and/or prior to release of equipment drawings for manufacturing. If formal completion of the study may cause delays in equipment shipments, approval from the Engineer may be obtained for a preliminary submittal of data to ensure that the selection of device ratings and characteristics will be satisfactory to properly select the distribution equipment. The formal study will be provided to verify preliminary findings.

F. Submittals For Construction:
1. The results of the short-circuit, protective device coordination and arc flash hazard analysis studies shall be summarized in a final report. A minimum of five (5) bound copies of the complete final report shall be submitted. For large system studies,
2. requiring more than five (5) copies of the report will be provided without the section containing the computer printout of the short- circuit input and output data. Electronic PDF copies of the report shall be provided upon request.

3. The report shall include the following sections:
   a. Executive Summary including Introduction, Scope of Work and Results/Recommendations.
   b. Short-Circuit Methodology Analysis Results and Recommendations
   c. Short-Circuit Device Evaluation Table
   d. Protective Device Coordination Methodology Analysis Results and Recommendations
   e. Protective Device Settings Table
   f. Time-Current Coordination Graphs and Recommendations
   g. Arc Flash Hazard Methodology Analysis Results and Recommendations including the details of the incident energy and flash protection boundary calculations, along with Arc Flash boundary distances, working distances, Incident Energy levels and Personal Protection Equipment levels.
   h. Arc Flash Labeling section showing types of labels to be provided. Section will contain descriptive information as well as typical label images.
   i. One-line system diagram that shall be computer generated and will clearly identify individual equipment buses, bus numbers used in the short-circuit analysis, cable and bus connections between the equipment, calculated maximum short-circuit current at each bus location, device numbers used in the time-current coordination analysis, and other information pertinent to the computer analysis.

G. Qualifications:
   1. The short-circuit, protective device coordination and arc flash hazard analysis studies shall be conducted under the responsible charge and approval of a Registered Professional Electrical Engineer skilled in performing and interpreting the power system studies.
   2. The Registered Professional Electrical Engineer shall be an employee of the equipment manufacturer.
   3. The approved engineering firm shall demonstrate experience with Arc Flash Hazard Analysis by submitting names of at least ten actual arc flash hazard analyses it has performed in the past year.

H. Computer Analysis Software:
   1. The studies shall be performed using SKM Systems Analysis Power*Tools for Windows (PTW) software program.

I. Studies:
   1. The Electrical SubContractor shall furnish an Arc Flash Hazard Analysis Study per NFPA 70E -Standard for Electrical Safety in the Workplace, reference Article 130.3 and Annex D. This study shall also include short-circuit and protective device coordination studies.

J. Data:

1. Electrical SubContractor shall furnish all data as required for the power system studies. The Engineer performing the short-circuit, protective device coordination and arc flash hazard analysis studies shall furnish the Contractor with a listing of required data immediately after award of the contract. The Electrical SubContractor shall expedite collection of the data to assure completion of the studies as required for final approval of the distribution equipment shop drawings and/or prior to the release of the equipment for manufacturing.
2. Source combination may include present and future motors and generators.
3. Load data utilized may include existing and proposed loads obtained from Contract Documents provided by Owner, or General Contractor.
4. If applicable, include fault contribution of existing motors in the study. The Electrical SubContractor shall obtain required existing equipment data, if necessary, to satisfy the study requirements.

K. Short-Circuit Analysis:

1. Transformer design impedances shall be used when test impedances are not available.
2. Provide the following:
   a. Calculation methods and assumptions
   b. Selected base per unit quantities
   c. One-line diagram of the system being evaluated that clearly identifies individual equipment buses, bus numbers used in the short-circuit analysis, cable and bus connections between the equipment, calculated maximum short-circuit current at each bus location and other information pertinent to the computer analysis
   d. The study shall include input circuit data including electric utility system characteristics, source impedance data, conductor lengths, number of conductors per phase, conductor impedance values, insulation types, transformer impedances and X/R ratios, motor contributions, and other circuit information as related to the short-circuit calculations.
   e. Tabulations of calculated quantities including short-circuit currents, X/R ratios, equipment short-circuit interrupting or withstand current ratings and notes regarding adequacy or inadequacy of the equipment rating.
   f. Results, conclusions, and recommendations. A comprehensive discussion section evaluating the adequacy or inadequacy of the equipment must be provided and include recommendations as appropriate for improvements to the system.
3. For solidly-grounded systems, provide a bolted line-to-ground fault current study for applicable buses as determined by the engineer performing the study.
4. Protective Device Evaluation:
   a. Evaluate equipment and protective devices and compare to short circuit ratings
   b. Adequacy of switchgear, motor control centers, and panelboard bus bars to withstand short- circuit stresses

c. Switchgear Manufacturer shall notify Owner in writing, of any circuit protective devices improperly rated for the calculated available fault current.

L. Protective Device Time-Current Coordination Analysis:

1. Protective device coordination time-current curves (TCC) shall be displayed on log-log scale graphs.
2. Include on each TCC graph, a complete title with descriptive device names.
3. Terminate device characteristic curves at a point reflecting maximum symmetrical or asymmetrical fault current to which the device is exposed.
4. Identify the device associated with each curve by manufacturer type, function, and, if applicable, tap, time delay, and instantaneous settings recommended.
5. Plot the following characteristics on the TCC graphs, where applicable:
   a. Electric utility's overcurrent protective device
   b. Medium voltage equipment overcurrent relays
   c. Medium and low voltage fuses including manufacturer's minimum melt, total clearing, tolerance, and damage bands
   d. Low voltage equipment circuit breaker trip devices, including manufacturer's tolerance bands
   e. Transformer full-load current, magnetizing inrush current, and ANSI through-fault protection curves
   f. Medium voltage conductor damage curves
   g. Ground fault protective devices, as applicable
   h. Pertinent motor starting characteristics and motor damage points, where applicable
   i. Pertinent generator short-circuit decrement curve and generator damage point
   j. The largest feeder circuit breaker in each motor control center and applicable panelboard.
6. Provide adequate time margins between device characteristics such that selective operation is provided, while providing proper protection.
   a. Provide the following:
      1) A One-line diagram shall be provided which clearly identifies individual equipment buses, bus numbers, device identification numbers and the maximum available short-circuit current at each bus when known.
      2) A sufficient number of log-log plots shall be provided to indicate the degree of system protection and coordination by displaying the time-current characteristics of series connected overcurrent devices and other pertinent system parameters.
      3) Computer printouts shall accompany the log-log plots and will contain descriptions for each of the devices shown, settings of the adjustable devices, and device identification numbers to aid in locating the devices on the log-log plots and the system one-line diagram.

4) The study shall include a separate, tabular printout containing the recommended settings of all
5) adjustable overcurrent protective devices, the equipment designation where the device is located, and the device number corresponding to the device on the system one-line diagram
6) A discussion section which evaluates the degree of system protection and service continuity with overcurrent devices, along with recommendations as required for addressing system protection or device coordination deficiencies.
7) Switchgear Manufacturer shall notify Owner in writing of any significant deficiencies in protection and/or coordination. Provide recommendations for improvements.

M. Arc Flash Hazard Analysis:

1. The arc flash hazard analysis shall be performed according to the IEEE 1584 equations that are presented in NFPA70E-2009, Annex D. The arc flash hazard analysis shall be performed in conjunction with the short-circuit analysis (Section 2.03) and the protective device time-current coordination analysis (Section 2.04).
2. The flash protection boundary and the incident energy shall be calculated at significant locations in the electrical distribution system (switchboards, switchgear, motor-control centers, panelboards, busway and splitters) where work could be performed on energized parts.
3. Circuits 240V or less fed by single transformer rated less than 125 kVA may be omitted from the computer model and will be assumed to have a hazard risk category 0 per NFPA 70E.
4. Working distances shall be based on IEEE 1584. The calculated arc flash protection boundary shall be determined using those working distances.
5. When appropriate, the short circuit calculations and the clearing times of the phase overcurrent devices will be retrieved from the short-circuit and coordination study model. Ground overcurrent relays should not be taken into consideration when determining the clearing time when performing incident energy calculations
6. The short-circuit calculations and the corresponding incident energy calculations for multiple system scenarios must be compared and the greatest incident energy must be uniquely reported for each equipment location in a single table. Calculations must be performed to represent the maximum and minimum contributions of fault current magnitude for normal and emergency operating conditions. The minimum calculation will assume that the utility contribution is at a minimum. Conversely, the maximum calculation will assume a maximum contribution from the utility. Calculations shall take into consideration the parallel operation of synchronous generators with the electric utility, where applicable as well as any stand-by generator applications.

   The Arc-Flash Hazard Analysis shall be performed utilizing mutually agreed upon facility operational conditions, and the final report shall describe, when applicable, how these conditions differ from worst-case bolted fault conditions.
7. The incident energy calculations must consider the accumulation of energy over time when performing arc flash calculations on buses with multiple

sources. Iterative calculations must take into account the changing current contributions, as the sources are interrupted or decremented with time. Fault contribution from motors should be decremented as follows:

a. Fault contribution from induction motors should not be considered beyond 5 cycles.

For each piece of ANSI rated equipment with an enclosed main device, two calculations shall be made. A calculation shall be made for the main cubicle, sides, or rear; and shall be based on a device located upstream of the equipment to clear the arcing fault. A second calculation shall be made for the front cubicles and shall be based on the equipment's main device to clear the arcing fault. For all other non-ANSI rated equipment, only one calculation shall be required and it shall be based on a device located upstream of the equipment to clear the arcing fault.

8. When performing incident energy calculations on the line side of a main breaker (as required per above), the line side and load side contributions must be included in the fault calculation.

9. Mis-coordination should be checked amongst all devices within the branch containing the immediate protective device upstream of the calculation location and the calculation should utilize the fastest device to compute the incident energy for the corresponding location.

10. Arc Flash calculations shall be based on actual overcurrent protective device clearing time. A maximum clearing time of 2 seconds will be used based on IEEE 1584-2002 section B.1.2. Where it is not physically possible to move outside of the flash protection boundary in less than 2 seconds during an arc flash event, a maximum clearing time based on the specific location shall be utilized.

11. Provide the following:

a. Results of the Arc-Flash Hazard Analysis shall be submitted in tabular form, and shall include device or bus name, bolted fault and arcing fault current levels, flash protection boundary distances, working distances, personal-protective equipment classes and AFIE (Arc Flash Incident Energy) levels.

b. The Arc-Flash Hazard Analysis shall report incident energy values based on recommended device settings for equipment within the scope of the study.

c. The Arc-Flash Hazard Analysis may include recommendations to reduce AFIE levels and enhance worker safety.

N. Field Adjustment:

1. Electrical SubContractor shall adjust relay and protective device settings according to the recommended settings table provided by the coordination study.

2. Electrical SubContractor shall make minor modifications to equipment as required to accomplish conformance with short circuit and protective device coordination studies.

3. Switchgear manufacturer shall notify the design engineer in writing of any required major equipment modifications.

O. Arc Flash Labels:

1. Electrical SubContractor shall provide a 4.0 in. x 4.0 in. Brady thermal transfer type label of high adhesion polyester for each work location analyzed.
2. The labels shall be designed according to the following standards:
   a. UL969 – Standard for Marking and Labeling Systems
   b. ANSI Z535.4 – Product Safety Signs and Labels
   c. NFPA 70 (National Electric Code) – Article 110.16
3. The label shall include the following information:
   a. System Voltage
   b. Flash protection boundary
   c. Personal Protective Equipment category
   d. Arc Flash Incident energy value (cal/cm²)
   e. Limited, restricted, and prohibited Approach Boundaries
   f. Study report number and issue date
4. Labels shall be printed by a thermal transfer type printer, with no field markings.
5. Arc flash labels shall be provided for equipment as identified in the study and the respective equipment access areas per the following:
   a. Floor Standing Equipment - Labels shall be provided on the front of each individual section. Equipment requiring rear and/or side access shall have labels provided on each individual section access area. Equipment line-ups containing sections with multiple incident energy and flash protection boundaries shall be labeled as identified in the Arc Flash Analysis table.
   b. Wall Mounted Equipment – Labels shall be provided on the front cover or a nearby adjacent surface, depending upon equipment configuration.

P. General Use Safety labels shall be installed on equipment in coordination with the Arc Flash labels. The General Use Safety labels shall warn of general electrical hazards associated with shock, arc flash, and explosions, and instruct workers to turn off power prior to work.

3.18 STORAGE AND INSTALLATION OF EQUIPMENT

A. The electrical subcontractor shall store and install electrical equipment and wiring listed for dry locations only after the building is watertight.

3.19 WASTE MANAGEMENT

A. Separate and recycle materials and material packaging in accordance with Waste Management Plan and to the maximum extent economically feasible and place in designated areas for recycling.

B. Set aside and protect materials suitable for reuse and/or remanufacturing.

C. Separate and fold up metal banding; flatten and place along with other metal scrap for recycling in designated area.

D. Coordinate with Section 017419 – CONSTRUCTION WASTE MANAGEMENT AND DISPOSAL.

3.20 TRAINING

A. All training shall be scheduled with the user. Training shall be videotaped and a DVD delivered to the Owner. Refer to each specific system for amount of training required.

3.21 SPARE PARTS/ATTIC STOCK:

A. REQUIREMENTS:

1. Provide attic stock of the following quantities and parts for each piece of equipment as follows:

Equipment/Unit	Parts Description	Quantity
LED Lights	LED Drivers	2 of each type
	Single faced exit signs	Refer to 2.8.D.1.a
	Double faced exit signs	Refer to 2.8.D.1.a
Fire Alarm	Smoke detectors of each type (Duct, ceiling, fire detectors)	3
	Detector	3
	Pull stations	3
	Spare printer ribbon	1
	Extra set of keys and tools for access to locked and tamperproof components	3

End of Section

Section 26 08 00

COMMISSIONING OF ELECTRICAL SYSTEMS

PART 1 - GENERAL

1.1 RELATED DOCUMENTS

A. Drawings and general provisions of the Contract, including General and Supplementary Conditions and other Division 01 Specification Sections, apply to this section.

1.2 SUMMARY

A. This section includes commissioning process requirements for Electrical systems, assemblies, and equipment.

B. Related Sections:

1. Division 01 Section "General Commissioning Requirements" for general commissioning process requirements.

1.3 DESCRIPTION

A. Refer to Division 01 Section “General Commissioning Requirements” for the description of commissioning.

1.4 DEFINITIONS

A. Refer to Division 01 Section “General Commissioning Requirements” for definitions.

1.5 SUBMITTALS

A. Refer to Division 01 Section “General Commissioning Requirements” for CxA’s role.

B. Refer to Division 01 Section “Submittals” for specific requirements. In addition, provide the following:

C. Certificates of readiness

D. Certificates of completion of installation, pre-start, and startup activities.

E. O&M manuals

F. Test reports

1.6 QUALITY ASSURANCE

A. Test Equipment Calibration Requirements: Contractors will comply with test manufacturer's calibration procedures and intervals. Recalibrate test instruments immediately after instruments have been repaired resulting from being dropped or damaged. Affix calibration tags to test instruments. Furnish calibration records to CxA upon request.

1.7 COORDINATION

A. Refer to Division 01 Section "General Commissioning Requirements" for requirements pertaining to coordination during the commissioning process.

PART 2 - PRODUCTS

2.1 TEST EQUIPMENT

A. All standard testing equipment required to perform startup, initial checkout and functional performance testing shall be provided by the Contractor for the equipment being tested. For example, the electrical contractor of Division 26 shall ultimately be responsible for all standard testing equipment for the electrical systems and controls systems in Division 26.

B. Special equipment, tools and instruments (specific to a piece of equipment and only available from vendor) required for testing shall be included in the base bid price to the Owner and left on site, except for stand-alone data logging equipment that may be used by the CxA.

C. Proprietary test equipment and software required by any equipment manufacturer for programming and/or start-up, whether specified or not, shall be provided by the manufacturer of the equipment. Manufacturer shall provide the test equipment, demonstrate its use, and assist in the commissioning process as needed. Proprietary test equipment (and software) shall become the property of the Owner upon completion of the commissioning process.

D. All testing equipment shall be of sufficient quality and accuracy to test and/or measure system performance with the tolerances specified in the Specifications. If not otherwise noted, the following minimum requirements apply: Temperature sensors and digital thermometers shall have a certified calibration within the past year to an accuracy of 0.5°F and a resolution of + or - 0.1°F. Pressure sensors shall have an accuracy of + or - 2.0% of the value range being measured (not full range of meter) and have been calibrated within the last year.

PART 3 - EXECUTION

3.1 GENERAL DOCUMENTATION REQUIREMENTS

A. With assistance from the installing contractors, the CxA will prepare Pre-Functional Checklists for all commissioned components, equipment, and systems

B. Red-lined Drawings: The contractor will verify all equipment, systems, instrumentation, wiring and components are shown correctly on red-lined drawings. Preliminary red-lined drawings must be made available to the Commissioning Team for use prior to the start of Functional Performance Testing. Changes, as a result of Functional Testing, must be incorporated into the final as-built drawings, which will be created from the red-lined drawings. The contracted party, as defined in the Contract Documents will create the as-built drawings.

C. Operation and Maintenance Data: Contractor will provide a copy of O&M literature within 45 days of each submittal acceptance for use during the commissioning process for all commissioned equipment and systems. The CxA will review the O&M literature once for conformance to project requirements. The CxA will receive a copy of the final approved O&M literature once corrections have been mad by the Contractor.

D. Demonstration and Training: Contractor will provide demonstration and training as required by the specifications. A complete training plan and schedule must be submitted by the Contractor to the CxA four weeks (4) prior to any training. A training agenda for each training session must be submitted to the CxA one (1) week prior the training session

3.2 CONTRACTOR'S RESPONSIBILITIES

A. Perform tests as required by Division 26.

B. Attend construction phase controls coordination meetings.

C. Participate in Electrical systems, assemblies, equipment, and component maintenance orientation and inspection as directed by the CA.

D. Provide information requested by the CxA for final commissioning documentation.

E. Include requirements for submittal data, operation and maintenance data, and training in each purchase order or sub-contract written.

F. Prepare preliminary schedule for Electrical system orientations and inspections, operation and maintenance manual submissions, training sessions, equipment start-up and task completion for owner. Distribute preliminary schedule to commissioning team members.

G. Update schedule as required throughout the construction period.

H. Assist the CxA in all verification and functional performance tests.

I. Provide measuring instruments and logging devices to record test data, and provide data acquisition equipment to record data for the complete range of testing for the required test period.

J. Gather operation and maintenance literature on all equipment, and assemble in binders as required by the specifications. Submit to CxA 45 days after submittal acceptance.

K. Coordinate with the CxA to provide 48-hour advance notice so that the witnessing of equipment and system start-up and testing can begin.

L. Notify the CxA a minimum of two weeks in advance of the time for start of the testing and balancing work. Attend the initial testing and balancing meeting for review of the official testing and balancing procedures.

M. Participate in, and schedule vendors and contractors to participate in the training sessions.

N. Provide written notification to the CM/GC and CxA that the following work has been completed in accordance with the contract documents, and that the equipment, systems, and sub-system are operating as required.
   1. Electrical equipment including but not limited to switchgear, panel boards, motor control centers, lighting, receptacles, dimmers and all other equipment furnished under this Division.
   2. Emergency generators, ATS switches and emergency power systems.
   3. Fire alarm system
   4. Lightning protection
   5. Grounding

O. The equipment supplier shall document the performance of his equipment.

P. Provide a complete set of red-lined drawings to the CxA prior to the start of Functional Performance Testing.

Q. Equipment Suppliers
   1. Provide all requested submittal data, including detailed start-up procedures and specific responsibilities of the Owner, to keep warranties in force.
   2. Assist in equipment testing per agreements with contractors.
   3. Provide information requested by CxA regarding equipment sequence of operation and testing procedures.

R. Refer to Division 01 Section “General Commissioning Requirements” for additional Contractor responsibilities.

3.3 CxA'S RESPONSIBILITIES

A. Refer to Division 01 Section “General Commissioning Requirements” for CxA’s Responsibilities.

3.4 TESTING PREPARATION

A. Certify in writing to the CxA that Electrical systems, subsystems, and equipment have been installed, calibrated, and started and are operating according to the Contract Documents.

B. Certify in writing to the CxA that Electrical instrumentation and control systems have been completed and calibrated, that they are operating according to the Contract Documents, and that pretest set points have been recorded.

C. Certify in writing that testing procedures have been completed and that testing reports have been submitted, discrepancies corrected, and corrective work approved.

D. Place systems, subsystems, and equipment into operating mode to be tested (e.g., normal shutdown, normal auto position, normal manual position, unoccupied cycle, emergency power, and alarm conditions).

E. Inspect and verify the position of each device and interlock identified on checklists.

F. Check safety cutouts, alarms, and interlocks with smoke control and life-safety systems during each mode of operation.

G. Testing Instrumentation: Install measuring instruments and logging devices to record test data as directed by the CxA.

3.5 GENERAL TESTING REQUIREMENTS

A. Provide technicians, instrumentation, and tools to perform commissioning test at the direction of the CxA.

B. Scope of Electrical testing shall include the entire Electrical installation, from the incoming power equipment throughout the distribution system. Testing shall include measuring, but not limited to resistance, voltage, and amperage of system(s) and devices.

C. Test all operating modes, interlocks, control responses, and responses to abnormal or emergency conditions, and verify proper response of building automation system controllers and sensors.

D. The CxA along with the Electrical contractor and other contracted subcontractors, including the fire alarm Subcontractor shall prepare detailed testing plans, procedures, and checklists for Electrical systems, subsystems, and equipment.

E. Tests will be performed using design conditions whenever possible.

F. Simulated conditions may need to be imposed using an artificial load when it is not practical to test under design conditions. Before simulating conditions, calibrate testing instruments. Provide equipment to simulate loads. Set simulated conditions as directed by the CxA and document simulated conditions and methods of simulation. After tests, return settings to normal operating conditions.

G. The CxA may direct that set points be altered when simulating conditions is not practical.

H. The CxA may direct that sensor values be altered with a signal generator when design or simulating conditions and altering set points are not practical.

I. If tests cannot be completed because of a deficiency outside the scope of the Electrical system, document the deficiency and report it to the Owner. After deficiencies are resolved, reschedule tests.

J. If the testing plan indicates specific seasonal testing, complete appropriate initial performance tests and documentation and schedule seasonal tests.

3.6 ELECTRICAL SYSTEMS, SUBSYSTEMS, AND EQUIPMENT TESTING PROCEDURES

A. Equipment Testing and Acceptance Procedures: Testing requirements are specified in individual Division 26 sections. Provide submittals, test data, inspector record, infrared camera and certifications to the CA.

B. Electrical Instrumentation and Control System Testing: Field testing plans and testing requirements are specified in Division 26 Sections "Instrumentation and Control" and "Sequence of Operations" Assist the CxA with preparation of testing plans.

C. Emergency Generator Testing and Acceptance Procedures: Provide technicians, load banks, infrared cameras, instrumentation, tools and equipment to test performance of designated systems and devices at the direction of the CxA. The CxA shall determine the sequence of testing and testing procedures for each equipment item and pipe section to be tested.

D. Fire Detection and Alarm System Testing: Provide technicians, instrumentation, tools and equipment to test performance of designated systems and devices at the direction of the CxA. The CxA shall determine the sequence of testing and testing procedures for each equipment item and pipe section to be tested.

E. Electrical Distribution System Testing: Provide technicians, load banks, infrared cameras, instrumentation, tools and equipment to test performance of designated systems and devices at the direction of the CxA. The CxA shall determine the sequence of testing and testing procedures for each equipment item to be tested

F. Vibration and Sound Tests: Provide technicians, instrumentation, tools, and equipment to test performance of vibration isolation and seismic controls as required by specifications.

G. The work included in the commissioning process involves a complete and thorough evaluation of the operation and performance of all components, systems and sub-systems. The following equipment and systems shall be evaluated:

Electrical Power Systems
Electrical service and switchgear
Transformers
Motor control centers
Electrical distribution systems
Emergency and standby power systems including automatic transfer switching systems
Lighting and lighting control systems
Low voltage systems
Grounding and bonding systems
Photovoltaic systems
Interfaces to automated temperature/building automation control systems
Life Safety Systems
Fire alarm systems
Egress lighting

3.7 DEFICIENCIES/NON-CONFORMANCE, COST OF RETESTING, FAILURE DUE TO MANUFACTURER DEFECT

A. Refer to Division 01 Section “General Commissioning Requirements” for requirements pertaining to deficiencies/non-conformance, cost of retesting, or failure due to manufacturer defect.

3.8 APPROVAL

A. Refer to Division 01 Section “General Commissioning Requirements” for approval procedures.

3.9 DEFERRED TESTING

A. Refer to Division 01 Section “General Commissioning Requirements” for requirements pertaining to deferred testing.

3.10 OPERATION AND MAINTENANCE MANUALS

A. The Operation and Maintenance Manuals shall conform to Contract Documents requirements as stated in Division 01.

B. Refer to Division 01 Section “General Commissioning Requirements” for the AE and CxA roles in the Operation and Maintenance Manual contribution, review and approval process.

3.11 TRAINING OF OWNER PERSONNEL

A. Refer to Division 01 Section “General Commissioning Requirements” for requirements pertaining to training.

End of Section

Section 26 61 11

THEATRICAL LIGHTING CONTROLS

PART 1 - GENERAL

1.1 SUMMARY

A. This section includes control systems for performance lighting and house lighting.

B. Section Includes:

1. Work in the following space:
   a. Auditorium
2. Systems:
   a. Relay Panels
   b. Electronics Racks
   c. Control Consoles and Accessories
   d. House Light Control Systems
   e. Data Communications Devices
   f. Performance Lighting Distribution and Control Faceplates
3. Provision of materials, components, modifications, assemblies, equipment and services as specified herein. These include, but are not limited to:
   a. Verification of site dimensions and conditions
   b. Plan control system run lengths with the Electrical Contractor. Submit length take off with shop drawings. Provide cost for in-line switches and repeaters with the bid.
   c. Submittals as required by the Contract Documents
   d. Engineering of equipment and systems as required by the Contract Documents
   e. Manufacture of equipment and systems as required by the Contract Documents
   f. Coordination with the System Integrator as required by the Contract Documents
   g. Scheduling, sequencing and coordination with other trades
   h. Installation and supervision for equipment and systems specified herein and elsewhere in the Contract Documents
   i. Testing and demonstration of equipment and systems as specified herein and elsewhere in the Contract Documents
   j. Commissioning and system configuration by manufacturer’s factory trained technicians

C. Products Supplied But Not Installed Under This Section:

1. TBD

D. Products Installed But Not Supplied Under This Section:

1. TBD

E. Related Sections:
   1. Division 11: Equipment:
      a. Section 11 61 33: Theatrical Rigging
      b. Section 11 61 91: Theatrical Lighting Instruments and Accessories
   2. Division 26: Electrical
      a. Section 26 51 13: Architectural Luminaires, Lamps, Ballasts

1.2 REFERENCES

A. Reference Standards:
   1. National Fire Protection Association (NFPA) Publication: National Electrical Code, NFPA70
   2. Underwriters Laboratories Standards:
      a. UL498, Electrical Attachment Plugs and Receptacles
      b. UL508, Electrical Industrial Control Equipment
      c. UL891, Dead-front Electrical Switchboards
      d. UL1573, Stage and Studio Lighting Units
   1. United States Institute for Theatre Technology Standard: DMX512-A (2008), Digital Data Transmission Standard for Controlling Lighting Equipment and Accessories
   2. ANSI Standards
      a. ANSI E1.11 - 2008 (R2013) Entertainment Technology - USITT DMX512-A, Asynchronous Serial Digital Data Transmission Standard for Controlling Lighting Equipment and Accessories
      b. E1.17-2015 Entertainment Technology - Architecture for Control Networks
      c. E1.20-2010 Entertainment technology – Remote Device Management over DMX512 Networks
      d. E1.27-2-2009 (R2014) Entertainment Technology – Recommended Practice for Installing Control Cables
      e. E1.30-7-2009, EP129 - Allocation of Internet Protocol Version 4 Addresses to ACN Hosts
      f. E1.31-2016 Entertainment Technology - Lightweight streaming protocol for transport of DMX512 using ACN
   3. Institute of Electrical and Electronics Engineers, Inc.:
      a. Standard: 802.3
      b. Standard: 802.11 b or g
   4. National Electric Code
   5. American National Standards Institute
   6. International Building Code

1.3 DEFINITIONS

A. AHJ: Authority Having Jurisdiction

B. DMX: Digital Multiplexing

C. NEC: National Electric Code

D. UL: Underwriters Laboratories, Inc.

E. USITT: United States Institute for Theatre Technology, Inc.

F. ESTA: Entertainment Services and Technology Association

G. FURNISH: Deliver and hand over to others for installation

H. INSTALL: Set in place and connect

I. PROVIDE: Furnish and Install

1.4 SUBSTITUTIONS

A. Substitutions, changes, or deletions from the plans and Specifications will not be allowed without the prior written approval of the Architect.

1. Substitution proposals from manufacturers not listed herein shall be accompanied by sufficient catalogue data, specifications, technical information, shop drawings, and samples to prove equivalence or superiority of the proposed substitution.

2. If any additional wiring or conduit is required due to an accepted substitution, the Control System Manufacturer shall contract with the General Contractor to perform this additional work at no cost to the Owner.

B. Proposals to submit bids for specific equipment by manufacturers listed herein which have been modified or improved will be considered, provided they are submitted to the Architect for approval.

1. Proposals shall be accompanied by sufficient catalog data, specifications, technical information, and samples to permit proper evaluation.

C. All questions regarding these plans and Specifications shall be referred to the Architect.

1.5 SUBMITTALS WITH BIDS

A. In addition to the submittals required under the General Conditions of these Specifications, all bidders shall submit with their bids the following:

1. Current specifications and catalog cuts for the stage lighting and house lighting equipment

2. Current specifications and catalog cuts for the house light control system.

3. Current specifications and catalog cuts for the stage lighting control console.

4. The specifications and catalog cuts furnished shall be those which were in effect on the date of issue of this Specification.

5. Documentation demonstrating the existence of a seven (7) day, twenty-four (24) hour field service organization staffed by more than one (1) full time factory-trained service technician capable of making field service repair visits.

a. Manufacturer's representatives and/or outside technicians cannot be listed as members of the field service organization.

6. A list of at least ten (10) systems of similar scope and size which have been in service for at one (1) year.
7. A schedule with the following time estimates:
   a. Length of time required to prepare shop drawings.
   b. Length of time required to supply all equipment.

1.6 SUBMITTALS

A. Provide submittals in accordance with General and Special Conditions. Submit submittals in a timely manner, allowing sufficient time for adequate review and possible resubmittal without jeopardizing the project schedule.

B. Shop Drawings:
   1. Submit shop drawings within sixty (60) days of award of contract, unless otherwise indicated in Division 1.
   2. Drawings for fabrication and installation of all products; Drawings will show all information necessary to explain fully the design features, appearance, function, fabrication, installation and use of system components in all phases of operation.
      a. Show materials, thickness, gauges
   3. Provide relay panel schedules based on the current information from the contract documents.
   4. Fabrication, Installation, and Erection shall not commence until shop drawings have been approved by the Architect and the Theatre Consultant.
   5. Submittal shall be drawn in an 11 inch by 17-inch format.
   6. All sheets in the submittal shall be of the same size.
   7. Submittal shall include a title sheet listing all sheets in the submittal.
   8. Submittal shall include a complete bill of materials showing all items being supplied by the manufacturer and or supplier.
   9. Coordinate and document the proposed control wiring signal runs to verify run distance and limitations. Provide run length takeoffs in the shop drawing riser.
   10. Review control signal cable runs with the electrical contractor and provide guidance and wiring diagrams based on site conditions.
      a. Wiring diagrams shall identify cable runs in excess of standard lengths and locations for in-line switches and/or repeaters.

C. Wiring diagrams shall take advantage of control topologies to minimize conduit and cable runs.

D. Commissioning Documentation:
   1. Certificates from the manufacturer's field engineer stating the installed system is operating properly and complies with manufacturer's recommendations
   2. Ethernet cable run certification
   3. Schedule of all tested and certified Ethernet cable run lengths

E. Record Drawings and Maintenance Manuals:

1. Operations and Maintenance Manuals (O&M) shall include:

   a. As-built drawings

   b. Final relay and associated panel schedules including DMX, sACN and EDMX addressing

   c. Contact information for pertinent manufacturers

   d. Safety and Operational Instructions

   e. Complete parts and subassembly list

   f. Software version information

   g. Wiring diagrams and termination schedules

   h. Periodic Maintenance Schedule

   i. A maintenance procedure for finishes

   j. Certificates of compliance with applicable codes

   k. Records of final testing and log

   l. Spare parts list and source information

   m. Warranty documentation

   n. Provide the above in universal electronic format files; pdf file type is preferred, as full-size printable sheets. Submit files on standard pc format USB clearly labeled including project name, project architect, theatre consultant, contractor name, date of submittal.

2. Bind all O&M documentation separate from general building sections so they can be turned over to the users after approval.

3. Provide draft copy of completed manuals for review to the Theatre Consultant before the start of commissioning.

4. Include diagrams depicting the system layout and interconnections. Reduced size, 11 by 17 inch preferred.

5. Provide three (3) copies of operation manuals

6. Provide two (2) copies of each system configuration on USB flash drives

1.7 QUALITY ASSURANCE

A. Qualifications:

1. Manufacturer: A firm who has been continuously engaged in the production of theatrical lighting and control equipment for at least fifteen (15) years and in the manufacture of theatrical control and dimming systems for a minimum of ten (10) years.

2. Installer: Skilled technicians who are thoroughly trained and experienced in the necessary crafts and who are completely familiar with the specified requirements and best industry practices for the proper installation of the work

B. Manufacturer shall provide a twenty-four (24) hour emergency service phone line.

1. A field service engineer shall respond to an emergency call on this line within thirty (30) minutes.

1.8 DELIVERY, STORAGE AND HANDLING

A. Deliver equipment and controls securely wrapped in factory fabricated wooden or fiberboard containers.

B. Handle equipment and controls carefully to prevent breakage, denting and scoring finish. Do not install damaged equipment and controls; replace and return damaged units to equipment manufacturer.

C. Acceptance at Site: Contractor shall accept and inventory all equipment upon delivery and provide copies of the inventory to the architect.

D. Storage and Protection: Store equipment in a secure, environmentally controlled location. Place no equipment until that location is substantially completed, free from construction dust, and “broom clean.” Store in original cartons and protect from dirt, physical damage, weather, and construction traffic.

E. The Control System Manufacturer shall coordinate delivery of all equipment with the Electrical Contractor.

1. If required by the Electrical Contractor, control system equipment shall be delivered in a minimum of three (3) separate shipments based on Electrical Contractor requirements.

2. Minimum shipment increments shall include:

a. Shipment #1: All items in which conduit is terminated. This shall include dimmer racks, relay cabinets, line voltage and control station back boxes.

b. Shipment #2: All items in which wiring is terminated. This shall include control station faceplates, etc.

c. Shipment #3: All items that are not required until the system activation by the Control System Manufacturer's field service representative. This shall include dimmer modules, electronics modules, control consoles, monitors, focus remote, cables, portable control stations, etc.

d. Control System Manufacturer shall schedule shipment #3 based on discussions with the Owner.

e. If shipment #3 items are delivered to the job site prior to the agreed upon schedule, the Control System Manufacturer shall be responsible for providing storage for these items until they are required on the job site.

1.9 PROJECT CONDITIONS

A. Field Measurements: Contractor is to verify all dimensions as they relate to requirements of the specification and manufacturer’s requirements and is to notify the Owner’s Representative of any variations, which would affect the installation and safe operation of the systems.

1. Coordinate the proposed control wiring signal routes to verify run distance and limitations.

1.10 SCHEDULING AND SEQUENCING

A. Provide a project schedule at time of contract award, indicating critical path for installation of these systems and coordination with other trades.

B. Coordinate with Electrical contractor for the provision of conduit for electrical power and control wiring.

1.11 WARRANTY

A. Special Warranty:

1. Provide warranty for systems and equipment to be free of defective components, faulty workmanship, and improper adjustment for a period of two (2) years from the date of substantial completion or acceptance by the Owner, whichever is later. Paint and exterior finishes are excluded. Replace items showing evidence of defective materials or workmanship (including installation workmanship) within thirty (30) days after notification. Make replacements without cost to the Owner.

2. Rectify conditions that might present a hazard to human life, well-being, or property within forty-eight (48) hours of notification.

B. Designate warranties on manufactured equipment to the Owner to commence on the date of system acceptance.

1.12 COMMISSIONING

A. Provide demonstration and testing of systems described in this section.

1.13 MAINTENANCE

A. Maintenance Service: Provide maintenance service for a period of two (2) years after final acceptance of the installation. This service shall cover parts and labor. This service consists of at least two (2) half-yearly visits to the site for checking and adjusting of equipment. Perform the first visit six (6) months after the system has been accepted.

B. Continuing Service Proposal: At time of bid, provide a separate proposal for continuing annual service visits to the installation for inspection and maintenance of the supplied systems.

1. Provide a proposal for the first visit to occur two (2) years after the date of hand-over and to continue for five (5) years after the date of commencement.

2. The proposal shall remain valid and extended until the date of hand-over, at which time the Owner may accept or reject the proposal without prejudice.

3. Warranty site visits, as specified in the Contract Documents, are specifically excluded from the Continuing Service Proposal.

PART 2 - PRODUCTS

2.1 MANUFACTURERS

A. Provide the control systems from components (except where otherwise stated) that are the products of one of the following manufacturers:

1. Electronic Theatre Controls, Inc., Middleton, WI - (608) 831-4116

2. MA Lighting (managed by A.C.T. Lighting) – (201) 996-0884

3. Strand Lighting (Signify), New York, NY (401) 374 3319

2.2 SPECIALTY SUBCONTRACTORS

A. The systems described herein shall be provided by a single contractor. The following subcontractors are pre-approved bidders for work contained in this specification:

1. Barbizon Lighting, Woburn, MA – (781) 935-3920
2. High Output, Canton, MA – (781) 364-1812
3. Main Stage, Pensacola, FL – (800) 851-3618
4. Starlite, Moorestown, NJ – (800) 738-7400
5. Limelight Productions, Lee, MA - (800) 243-4950

B. Other Contractors wishing to bid must submit qualifications to the Architect and Client for approval prior to bid.

1. Requirements:

a. Specialty Subcontractor and the individuals responsible for installation in the field shall have been continuously engaged in the sales and integration of power distribution and control equipment similar to that specified herein for a minimum of ten (10) years and shall have completed at least eight (8) installations of this type and scope.

b. Specialty Subcontractors shall have at time of bid and continuously maintain throughout the project and warranty period a Specialty Contractor's license appropriate for work in this Section.

2.3 MANUFACTURED UNITS

A. Control Consoles:

1. General:

a. Control consoles to be provided by same manufacturer as control system.

b. Provide software current at time of installation.

i. Provide a minimum two (2) year subscription to update all performance lighting console software such as fixture libraries, visualization software, and related lighting paperwork.

c. Console shall be configured to be a node on the lighting network and shall be ACN compatible.

d. Software Features:

i. Capacity to display the following screens

ii. Stage (live) - Levels currently active on stage

iii. Preview (blind) - Levels recorded in a preset

iv. Softpatch - Patching information

v. Setup configuration - Basic operating parameters

vi. Disk read, write and format

vii. Clear show

viii. Setup Parameters

ix. Default Fade Time

x. Dimmer configuration

xi. Channel configuration

xii. Hardware configuration

xiii. Print Functions:

a. Stage Display

b. Cues

c. Submasters

d. Patch

xiv. Patching:

a. Proportional patching of dimmers to channels of control

xv. Recording

xvi. Channel list constructed with AND and THROUGH functions

xvii. Proportional adjustment of current channel list with level wheel

xviii. Setting of levels with AT function

xix. Release of channel list without modification

xx. Recording of stage or blind settings

xxi. Cue numbers between 000.1 to 999.9

xxii. Non-sequential recording

xxiii. Cue time fades of 1 to 99 seconds

xxiv. Split fade up and down times

xxv. Cue linking allowing cues to automatically follow each other

xxvi. Link delay time

e. Playback:

i. Pairs simultaneously timed cross fades, pile-on fades, and split fades

ii. Last action within each fader pair

iii. Highest level between fader pairs

iv. Capacity to override, halt, or release halted fades

v. Discrete overriding of each half of a fader pair

f. Submasters:

i. Totals specified herein shall be for physical faders. Digital “soft” submasters or pages of submasters shall not count to the total specified.

ii. Submasters are overlapping in a highest takes precedence fashion.

iii. Each submaster has a bump button which forces channels assigned to that submaster to their recorded level.

iv. Submasters are recorded live or blind.

v. Proportional control of assigned levels

vi. Capacity to build cues from submasters

g. Effects package including:

i. Effects built from submasters

ii. Variable one (1) to six (6) part chase

iii. Level and rate control of chase

h. On-line help information

2. 500 Channel Performance Lighting Console

a. Minimum Basic Capacities:

i. One thousand twenty-four (1,024) outputs

ii. Five hundred (500) control channels

iii. Ten thousand (10,000) cue memory capacity

iv. Forty (40) submasters

b. Hardware Features:

i. Two (2) black 19-inch touch screens

ii. One (1) remote focus port

iii. One (1) Ethernet port

iv. Operating software stored in upgradeable, internal non-volatile memory.

v. Show data storage in battery backed up random access memory

vi. One (1) internal hard drive unit for library storage

vii. Extended numeric keypad for entering dimmer, channel, submaster, preset, level, time and link instructions

viii. One alpha-numeric keyboard for notating cue information

ix. Display keypad to provide access to display settings

x. Level wheel (or pad) for proportional intensity control over user selectable channels

xi. Two (2) electronically timed cross faders with manual override, each with a fade time status display, HOLD, CLEAR, GO BACK and GO functions

xii. Proportional Grand master

xiii. Receptacles for plug-in dimmer control cables

xiv. AC power cable and a set of 25'-0" control cables with connectors

c. Acceptable products:

i. Basis of Design: Electronic Theater Controls – Element 2 – 1K

ii. Or Approved Equal

B. Console Accessories - Refer to the schedule herein for quantities:

1. Remote Focus Unit:

a. Provide portable units capable of calling up dimmers, channels, cues and submasters.

b. Provide console with wired remote focus units as listed herein.

c. Provide each wired unit with one (1) 25-foot control cable and one (1) 50 foot extension cable.

d. Device shall be capable of calling up dimmers, channels, cues and submasters.

e. Provide spare battery and charger for each handheld portable.

2. Console Desk:

a. Provide roll top console stand suitable for use at front of house lighting control position.

b. Acceptable Products:

i. Basis of Design: HSA High Rise Standard Rolltop (HRSTD-II)

ii. Or Approved Equal

3. Dust Covers:

a. Provide standard dust covers

i. Provide for each console

ii. Provide for each video monitor/display.

b. Acceptable Products:

i. Basis of Design: OEM

4. Refer to the schedule herein for quantities

a. Back-up data storage:

i. Provide two (2) 256GB USB flash drives per console.

b. Worklight:

i. Provide one (1) console powered worklight per console.

c. Uninterrupted power supply (UPS)

i. Power filtration/line regulation/battery backup with the following minimum capacities:

a. Input voltage < 132 V AC

b. Output voltage 115 V AC ± 5 percent

c. Transfer voltage 103 V AC

d. Surge energy 240 J

e. Surge current 6500 A peak

f. Surge response time 0 ns (instantaneous)

g. Noise filtration, full time EMI/RFI suppression, 100 kHz to 10 MHz, > 60 dB

h. Audible low battery signal

i. Minimum of ten (10) minutes back-up time

C. House Light Control System

1. General:

a. Provide an integrated House Light Control system. The system is capable of controlling performance and house lighting through local and master control stations.

i. Coordinate with Electrical Engineer, Architectural Lighting Designer and System Integrator (if any) for DMX addressing requirements. Provide processors with capacity for the total of all DMX assignments required for controlling architectural LEDs to their finest resolution.

b. House Light Controls and Control Console have simultaneous “pile on” control of dimmers and relays as shown on the Drawings.

c. System is programmable using a laptop computer or designated LCD touchscreen control stations.

d. User interface is through pushbutton and or LCD touchscreen control stations.

e. Provide relays and circuit breakers based on zone designations. Relays shall not be ganged on individual circuit breakers.

2. Standard Operating Features:

a. Control system allows cross fading between presets within each of multiple rooms.

b. Presets can mirror between stations.

c. System parameters are user configurable. These parameters include but are not limited to current date, current time, dimmer type, high level limit, control station name, preset names, presets, mirror designation, lockout modes, dimmer assignments per channel, preset master names, station numbers, channel levels, and station names.

d. System accepts dry closures from external sources. Closures shall be momentary alternate action turning channels or presets on or off.

e. Fade times on each preset are adjustable from 0 - 999 seconds.

f. Preset masters are available to control groups of presets throughout the system.

g. Presets shall be programmed to be recalled from the AV system control panel.

h. Programming of 8 presets is required. Presets to be stored in the houselight processor.

i. Provide RS232 serial cable connection to the AV control system.

j. Preset masters shall also provide “template” ability whereby station activation or control parameters maybe changed.

k. System provides disk storage of configuration and lighting data.

l. Provide Architectural lighting program to owner for future changes to system configuration.

3. Pushbutton Stations:

a. Provide pushbutton stations with the following minimum capabilities and equipment:

i. Each pushbutton may be configured to control a single channel or a single preset as required.

ii. Each pushbutton may be configured either to toggle a preset or channel on and off or to initiate a crossfade to another preset as required.

iii. Each pushbutton may be configured to allow resetting of the channel or preset intensity by holding the pushbutton until the preset or channel fades to the desired level and releasing the pushbutton to store the new level.

iv. Faceplate signage is screened as per Contract Documents. Each pushbutton station may be configured to control multiple channels or presets as required by the different states for which the system is configured.

v. Station shall fit into a standard single gang wall box for recessed installation.

vi. Provide painted steel backbox sized to faceplate dimensions for surface installation.

vii. Provide LED indicators programmable as locator lights, station active pilot lights, or station enabled pilot lights.

4. LCD Touchscreen Stations:

   a. All LCD touchscreens should be 7-inch minimum Active Matrix type screens.

   b. Custom configure LCD touchscreens to project requirements.

   c. Station shall provide up to 128 presets.

   d. Station shall be able to address individual dimmers and relays within a preset and modify levels and fade times.

   e. Multiple LCD touchscreen control stations shall mimic and control shall be last action takes precedence.

   f. Provide programming, patching and recording ability from Lighting Control Room stations.

   g. Provide LCD Screen graphics and functionality as shown on the Contract Drawings.

   h. Provide painted steel backbox appropriately sized for recessed installation.

   i. Provide painted steel backbox sized to faceplate dimensions for surface installation.

   j. Provide lockable cover as shown on faceplate drawings.

5. Portable LCD touchscreen (portable consolette):

   a. Provide portable panel in a tabletop consolette with 25 foot control cable for each space with a dedicated house worklight control system.

   b. Master states shall be user configurable via external PC and shall include the ability to:

      i. Lock out or enable control stations

6. Control Station Material and Finish:

   a. Material: 1/8 inch aluminum

   b. Finish: “Black” or “Custom” as indicated on the Drawings.

      i. Black finish: 120 grit, horizontally brushed black anodized

      ii. Special finish: Powder coat painted finish

   c. Legends: Engraved and paint filled as shown or as directed.

   d. Reinforce faceplate as needed to minimize deflection.

7. Configure the system to provide no delay time between the toggle "on" position and the illumination of the lighting fixture and the reporting back to the station.

8. Acceptable Products: Subject to the above requirements, provide one of the following products:

   a. Basis of design: Electronic Theatre Controls Unison/Paradigm

b. Or approved equal

D. DMX Driven Relay Panels (Intelligent Panel Board System)

1. General:

a. Breaker Panels shall be UL Listed and labeled.

b. Breaker Panels shall consist of a main enclosure with breaker subpanels, integral control electronics, and provision for accessory cards.

i. Up to three accessory cards shall be supported per breaker panel

a. Panel shall be network enabled

b. Panel shall have ride thru option

2. Provide signage on the relay panels with the following attributes:

a. Material: 1/8-inch black lamacoid

b. Finish: Black with white fill

c. Engraving: 3/8-inch-high characters with non-yellowing white fill

d. Indicate the following on the sign:

Project:	Project Name
Theatre Consultant:	Theatre Projects
Manufacturer:	Company Name city, state and service telephone number

e. Rivet to front on one (1) relay panel in each dimmer/relay room.

3. Control Features:

a. Standard control format is DMX-512.

i. Addressing shall be set via the user interface button keypad with any circuit patched to any DMX control address.

ii. The breakers shall respond to control changes (DMX or Stations) in less than 25 milliseconds. DMX512 update speed shall be 40Hz.

iii. Setting changes shall be able to be made across all, some, or just one selected breaker in a single action from the face panel

iv. DMX data loss shall allow for levels/breakers to be held for ever or for a specified time before switching to a lower priority source

b. Initial Panel setup

i. The breaker panel shall automatically detect the type of breaker installed in each location without need for manual configuration of the physical arrangement.

ii. Quick rack setup shall be available to apply address settings across all circuits for rack number, DMX Start Address, sACN universe, and sACN start address.

iii. Emergency Setup Menu shall provide optional delays when emergency is activated or deactivated, and option to turn off non-emergency circuits shall be available. Record function shall allow circuits that are turned on to be added to the emergency setting.

4. User Interface:
    a. The user interface shall contain a graphical display with button pad to include numeric entry, navigation arrows and enter.
    b. Test shortcut button shall be available for local activation of preset, sequence and set level overrides.
    c. The user interface shall have a power status LED indicator, a DMX status LED indicator, a network status LED indicator, and an LED indicator for errors.
    d. Ethernet interface shall be installed and shall default to automatic IP through link local and DHCP. Upon receiving IP address, the address of the Network Interface Card (NIC) shall display in the about menu. Static address and settings shall also be possible.
    e. The control interface shall support a USB memory stick interface for uploads of configurations and software updates.
5. Functional:
    a. Panel setup shall be user programmable. The control interface shall provide the following breaker setup features (per circuit):
        i. Type (1 pole, 2 pole, or 3 pole)
        ii. Name
        iii. Circuit Number
        iv. DMX address
        v. sACN address
        vi. Space Number
        vii. Circuit Modes
        viii. Include in UL924 emergency activation
    b. Breaker panels shall support discrete addressing of each breaker.
        i. The panel shall be capable of switching 6 poles on or off at once, or in a user-selectable delay per breaker using a period of 0.1 to 60 seconds, in 0.1 second increments
        ii. Control electronics shall report the following information per branch circuit:
            a. Breaker state (On/ Off)
            b. Breaker state (Open/ Closed)
            c. Current draw (In Amps)
            d. Voltage
            e. Energy usage
        iii. Built in Control shall include:
            a. Ability to record up to 16 presets in each space from the control panel, connected control stations, or timed events
            b. Presets shall be programmable by recording current levels (as set by DMX or connected control stations), by entering levels on the control panel directly, manually selecting breaker state on each breaker, or a combination of these methods.

c. Indication of an active preset shall be visible on the control panel display.

d. One 16-step sequence per space for power up and power down routines

e. The panel shall have a UL924-listed contact input for use in Emergency Lighting systems. The panel shall respond to the contact input by setting included breakers to “on”, while setting non-emergency breakers “off”. Each breaker can be selected for activation upon contact input.

f. Upon data loss, the system shall provide options to hold last look infinitely or hold for a configured time period set by the installing technician then fade/switch to the input of the next available priority.

g. Control electronics shall respond directly to control stations for zone, preset, and sequence control. Systems that require secondary control systems for this functionality are not acceptable.

h. After power loss, electronics shall be capable of holding the system in its previous state until new level data (DMX, architectural presets, sequences and zones, or local overrides) is received to make each breaker change state.

6. Electrical:

a. Breaker Panels shall support power input from:

i. 120/208V three phase 4-wire plus ground

b. Breaker:

i. Bus connection type: Stab on

ii. 1, 2, or 3 poles

iii. 15 amp, 20 amp, or 30 amp

iv. 22,000 SCCR; 65,000A series rated w main breaker

v. High inrush trip curve

vi. Maintains trip curve through entire thermal range

vii. Guaranteed not to trip at full load

viii. Load lugs accept 6-18awg load wiring

ix. Multi-conductor rated output terminal

x. Integral mechanically held air gap relay

xi. Manual control of relay state using breaker handle w/o power

xii. Integral current sensing

xiii. Integral position and trip sensing

xiv. Control and status provided by contact pads directly at bottom of the breaker case. No external wires or connections required for control or feedback

xv. The breaker panel shall support a maximum feed size

a. 400 Amps at 48 circuits

c. Breaker panels shall support main circuit breaker options:

i. Main breaker options shall be available

ii. Main breakers shall be field installable

iii. Main breakers shall allow the following range of wire sizes:

a. Up to 300kcmil at 100A and 200A

b. Up to 600kcmil at 400A

iv. Main Lug input shall support up to 2x200kcmil

7. Accessories for use as emergency lighting panel

a. Provide power loss sensing device, by-pass option, UPS battery backup and other accessories to configure standard relay panel for use on a normal/emergency feed.

b. At time of power loss relay panel control module shall switch all relays within that panel on.

c. Refer to the electrical drawings for relay panel assignments to emergency lighting use.

d. Acceptable Products:

i. Basis of Design: Electronic Theatre Controls - Sensor IQ Intelligent Panelboard System

ii. Or approved equal

E. Data Communications

1. Provide a fully functioning Performance lighting Ethernet system. Install the system in conformance with the latest ESTA and IEEE 802.3 standards and the control console manufacturer's requirements.

a. Uninterrupted power supply (UPS) Power filtration/line regulation/battery backup with the following minimum capacities:

i. Input voltage < 132 V AC

ii. Output voltage 115 V AC ± 5 percent

iii. Transfer voltage 103 V AC

iv. Surge energy 240 J

v. Surge current 6500 A peak

vi. Surge response time 0 ns (instantaneous)

vii. Noise filtration, full time EMI/RFI suppression, 100 kHz to 10 MHz, > 60 dB

viii. Audible low battery signal

ix. Minimum of ten (10) minutes back-up time

2. Provide Cat-6a green jacketed cable to identify the lighting control network.

3. Coordinate the wireless Ethernet protocols with other areas of theatrical production (Sound, Rigging and Automation, and Administration) to ensure that the theatrical lighting system has its own dedicated secured channel and does not broadcast SSID information that would allow the system to be compromised. Set up MAC address filtering if nearby networks require it.

4. Control (Aux) Rack

a. Provide standard wall-mounted, hinged 19 inch control rack(s) with sufficient space to accept devices as shown on the drawings.

b. Control Rack Accessories:

i. Locking door

ii. Regressing brackets to permit the door to close with connectors patched to devices.

iii. Blank panels to fill all spaces

c. Provide signage on the Aux rack with the following attributes:

i. Material: 1/8-inch black lamacoid

ii. Finish: black with white fill

iii. Engraving: 3/8-inch-high characters with non-yellowing white fill

iv. Indicate the following on the sign:

Project:	Project Name
Theatre Consultant:	Theatre Projects
Manufacturer:	Company Name City, state and service telephone number

v. Rivet to front on one (1) Aux rack in each dimmer/relay room.

5. 24+2 Gigabit Ethernet Switches-PoE / Patch Panels:

a. Provide managed switches and patch panels of a high quality from a company with five or more years of experience manufacturing this equipment.

b. All Gigabit Ethernet switches shall be Power-over-Ethernet units capable of operating standard and fast Ethernet protocols.

c. The switch shall include the following connections:

i. Qty. 24, 10/100/1000BaseT ports with 802.3af Power over Ethernet

ii. Qty. 2, 10/100/1000BaseT ports

iii. Qty. 2, mini-GBIC (SFP) ports fitted with 1000BaseSX Fiber Optic module

d. Label switches and patch panels with the locations of the field boxes and as labeled in the box schedules.

e. Provide proper quantity of Category 6 patch cables to patch all field devices to hubs/switches.

f. All wireless switches must comply with latest IEEE 802.3 b/g standards and are to be installed using best industry practices.

g. Provide web browsable switches that can be accessed through any commercially available web browser.

h. Provide in-line switches based on proposed and actual cable run lengths.

i. Provide rack mounted power filtration/line regulation/battery backup unit (as specified herein) for each hub/switch.

j. Acceptable switch manufacturers:

i. Basis of design:

a. Hewlett-Packard – Procurve series, 3000 Hanover Street, Palo Alto, CA

b. Cisco Systems – 300 series, 170 West Tasman Drive, San Jose, CA

c. Or approved equal

6. Ethernet Nodes:
    a. Provide the latest products available from the control console manufacturer at the time of installation.
    b. Ethernet Nodes to be sACN compatible.
    c. Provide rack mounted dual four port nodes in each aux rack for DMX output. See drawings for quantities.
    d. Provide control cable packages as listed in the schedule in Part 3 of this section.
    e. Acceptable Products:
        i. Basis of design:
            a. Electronic Theatre Controls - Net3 Gateways

F. Distribution and Control Faceplates and Back Boxes
1. Provide line voltage and control faceplates and back boxes as shown in the TL-series drawings.
2. General:
    a. For surface mounted conditions faceplate and back box dimensions are equal.
    b. Remove sharp edges and burrs on faceplates.
    c. In all cases faceplate screw color is to match faceplate color.
3. Distribution (Line Voltage) Faceplates:
    a. Material: Minimum 14-gauge steel
    b. Finish: “Black” or “Custom” as indicated on the Drawings
        i. Black finish: Powder coat flat black enamel
        ii. Special finish: Powder coat painted finish to match Architect’s sample
    c. Provide terminal strips as needed for connection of wiring within pigtail boxes.
    d. Reinforce faceplates as needed where deflection may occur under heavy use.
    e. Provide a removable label on the faceplate designating the box number as shown in the drawings.
    f. Label each faceplate with circuit numbers as shown on the Drawings and Schedules.
        i. Material: 1/8 inch black lamacoid
        ii. Finish: Black with non-yellowing white fill
        iii. Engraving: 1/2 inch high characters with non-yellowing white fill
        iv. Attach labels to the faceplate with appropriate adhesive and rivet to faceplates.
    g. Label the inside back of each box with an arrow indicating the "up" position.
    h. Label the outside top of each box with a removable OSHA yellow sticker with a minimum of 1-inch high lettering indicating the "up" position.
    i. Fill unused pre-drilled mounting holes.
    j. Label each pigtail connector with circuit number, unless otherwise indicated.

i. Directly engrave into cover of connector in 1/2-inch-high characters with non-yellowing white fill.

k. Flexible Cable:

i. Type SO sized to accommodate the maximum load of the terminating connector

ii. Color: Black

4. Control Faceplates:

a. Material: 1/8-inch aluminum

b. Finish: “Black” or “Custom” as indicated on the Drawings

i. Black finish: 120 grit, horizontally brushed black anodized

ii. Special finish: Powder coat painted finish to match Architect’s sample

c. Reinforce faceplate as needed to minimize deflection.

d. Legends: Engraved and paint filled as shown or as directed.

e. Provide a removable label on the faceplate designating the box number as shown in the drawings.

f. Faceplate shall fit into standard sized gang wall box for recessed installation.

g. Provide painted steel backbox sized to faceplate dimensions for surface installation.

h. Receptacles

i. XLR

a. Neutrik DL series black metal housing XLR with silver contacts or equal

ii. Ethernet

a. Neutrik etherCON D Series black metal housing RJ45 or equal

5. Acceptable Manufacturers:

a. Electronic Theatre Controls

b. TMB Associates

c. Lex Products

d. Union Connector

G. DMX isolated Splitter

1. Five (5) outputs minimum

2. Termination switch

3. 2500V opto isolation between input and output signals

4. 250V fault protection

5. Provide pipe mount accessories

6. RDM compatible

7. Acceptable Manufacturers:

a. Basis of design:

i. Pathway Connectivity Solutions

ii. Doug Fleenor Design

2.4 ACCESSORIES

A. Provide two (2) copies of associated manuals.

B. Configuration Documentation:

1. Provide two (2) copies of each system configuration on the USB flash drive.

2.5 SUPPLEMENTARY

A. Provide equipment and hardware in addition to the items specified previously that are necessary to provide a fully working system in conformance with the intent of the Contract Documents.

PART 3 - EXECUTION

3.1 EXAMINATION

A. Examine areas where performance controls are to be installed and to verify that conditions are satisfactory for installation and comply with manufacturer’s requirements and those specified in this section.

B. Lighting control electronics shall not be installed in rooms where the interior finishes are not complete.

1. Control rooms and performance electrical rooms shall be broom clean and free of debris.

2. Do not proceed with installation until unsatisfactory conditions have been corrected.

C. Examine drawings and confirm that number, size, and location of conduits are adequate for proposed system.

D. Review the network cables runs and provide in-line switches and power for runs exceeding 300 feet.

3.2 INSTALLATION

A. Install performance lighting and controls where shown, in accordance with manufacturer's written instructions and with recognized industry practice to ensure that performance lighting equipment complies with applicable requirements of NEC and UL standards and with the applicable portions of NECA's "Standard of Installation."

B. All load circuit conductors shall be continuous from the performance electrical rooms to the back box without splices or connectors.

C. All data wiring shall be continuous from termination point to termination point. No splices or connectors allowed.

3.3 FIELD QUALITY CONTROL

A. Provide or facilitate the following tests or inspections. Correct deficiencies and retest deficient items.

B. Visual and Mechanical Inspections: Include the following:

1. Inspect each receptacle, and other loose items of equipment for defects, finish failure, corrosion, physical damage, labeling, and nameplate.
2. Exercise and perform operational tests on mechanical parts and operable devices according to manufacturer's instructions or routine functional operation.
3. Check tightness of electrical connections with torque wrench calibrated within the previous six (6) months. Use manufacturer's recommended torque values.
4. Verify proper protective device setting and fuse types and ratings.

C. Electrical Tests: Perform according to manufacturer's instructions. Exercise caution testing devices containing solid state components.

1. Operational and continuity tests of all circuits. Perform an outlet by outlet operational test of the relay circuits to determine proper wiring and exact correspondence between the circuit numbers and the receptacle labels.
2. Operational tests of Ethernet runs: Test each Ethernet wiring run for proper operation in conformance with the IEEE standard. Document the length of each run.

D. Manufacturer's Field Service:

1. Provide the services of a qualified service representative, employed regularly and full time by the manufacturer of the control system(s), to check the installation of the control system(s) and ensure its proper operation. Do not energize any part of the control system until their check is complete and the service representative is present to observe the turn-on procedure.
2. Provide manufacturer's technician to configure house/work lighting control system as directed prior to system commissioning. One (1) set of changes to the initial operating configuration may be required subsequent to commissioning. One (1) set of changes will be required following acceptance.

E. Pre-Commissioning Test

1. Organize and conduct a test of the DMX addressing for the house and work light system.
2. Verify fixtures and racks have been addressed according to the coordinated DMX addressing table.
3. Schedule the pre-commissioning test upon completion of the DMX addressing.
4. Notify the architect fourteen (14) days prior to the test.
5. Provide field technicians and equipment required to address fixtures to their assigned resolution. The computer, if used in place of the console, shall have the ability run timed, simultaneous fades of all DMX addresses.
6. Store finalized DMX addressing scheme on the control processor and at an off-site location.

F. System Commissioning:

1. Upon completing installation, other tests, and manufacturer's check-out, schedule an inspection and operating test with the Architect. Facilitate such tests as may be required to ensure that all equipment is in compliance with the intent of the specification.

2. Upon completion of the installation, and before scheduling the system inspection with the Architect and Architectural Lighting Designer, the Electrical Contractor shall confirm the following in writing:
    a. Theatrical load circuits have been tested and are operational.
    b. Data circuits have been tested and are operational.
    c. Architectural control stations installed and are operational.
    d. Architectural lighting loads are terminated, operational and assigned addresses per the contract documents.
    e. Loose equipment is on site and located in the control room for each performance space. Equipment should be secured within these control rooms to prevent theft, or damage from construction debris.
    f. If any of the above items are found to be incomplete after receipt of notification, the Electrical Contractor shall reimburse expenses including labor, travel, hotel and meals.
3. Comply with the following conditions required for commissioning:
    a. Provide documentation to the Architect certifying all Ethernet outlets adhere to IEEE standards.
    b. Loose equipment provided under this section to be on site and available for testing.
    c. All architectural lighting fixtures wired to the control system shall be installed and lamped.
    d. Provide full and uninterrupted access to stage, auditorium, and technical areas required for commissioning tests. Blackouts of lighting will be required.
    e. Contractor's project representative to be present during tests as required.
    f. Provide Manufacturer technicians for final programming of all systems.
    g. Manufacturer's factory field technician to be present during tests and inspections.
    h. Provide personnel to operate equipment and perform adjustments as necessary.
    i. Provide access equipment as required.
    j. Provide four (4) stations of professional quality radio communication and battery charging station.
        i. Provide a headset for each station.
4. Contractor is required to facilitate the Consultant/Architect commissioning of the Control system. This commissioning will include but is not limited to the following items.
    a. Verify that loose and installed equipment quantities are as contracted.
    b. Inspect all system components individually for conformance to specification.
    c. Test each branch circuit for operation, correct circuit identification, and proper arrangement of hot, neutral, and ground conductors.
    d. Spot test selected branch circuits at maximum load.
    e. Verify operation of all houselight fixtures. Test operation of all houselight control devices. Verify that logical operation of controls is as specified.
    f. Verify operation of all portable control and portable display devices from all associated receptacle locations.
    g. Using a DMX source, verify operation of DMX distribution network.

h. Confirm the proper operation of the lighting Ethernet system.

i. Review operation, maintenance, and instruction manuals. Review warranty certificate.

j. Confirm that user training has/will occur per specification.

5. Notification to the Architect a minimum of fourteen (14) days prior to date of inspection that installation is complete and that all building systems and conditions have been met for complete testing is required before a specific commissioning date will be confirmed.

3.4 CLEANING

A. Remove paint spatters and other spots, dirt, and debris.

B. Repair scratches and mars of finish to match original finish.

C. Clean devices and equipment internally and externally using methods and materials as recommended by manufacturers.

3.5 DEMONSTRATION AND INSTRUCTION

A. The manufacturer of the system shall provide a minimum of twenty (20) hours of training in the operation of the control console, architectural control system, and other related systems specified herein. These sessions shall consist of five (5) – four (4) hour sessions at times separate from the check-out of the systems. Training time to be arranged with the staff of the facility and shall take place over the first six (6) months after building acceptance. These training sessions cannot be *completed consecutively and should be separated by no less than 1 month or as directed by users.*

B. Provide digital video of training for Owner's use in future training sessions.

3.6 CONTROL EQUIPMENT SCHEDULE

A. The following schedule includes off-the-shelf equipment for the lighting control system. Provide equipment and hardware in addition to the items specified that are necessary to provide a fully working system.

1. Provide unit pricing for items noted in the following schedule.

ITEM #	DESCRIPTION	Unit Pricing Required	Quantity	Grand Total
1	500 channel lighting console		1	
2	19 inch flat screen touch panels		2	
3	Worklight		1	
4	USB flash drive		1	
5	UPS		2	
6	Roll Top Console Desk		1	
7	Hardwired Remote Focus Unit		1	

ITEM #	DESCRIPTION	Unit Pricing Required	Quantity	Grand Total
8	2-port network nodes with Mega Clamps		1	
9	10 foot Network cable TMB CAT6A Neutrik EtherCon connectors		1	
10	25 foot Network cable TMB CAT6A Neutrik EtherCon connectors		1	
11	50 foot DMX Cable TMB PC224P Neutrik 5pin XLR		1	
12	DMX gender bender male-to-male		1	
13	Portable LCD Touchscreen (portable consolette)		1	

Note: Schedule is not all inclusive, refer to body of specification for additional equipment required.

End of Section

THEATRE PROJECTS CONSULTANTS, INC.
COPYRIGHT © 2019
L:\19522-FULLER MIDDLE SCHOOL\19522-99-2019-11-19-100CD ISSUE\01-SPECS\19522-26 61 11 - THEATRICAL LIGHTING CONTROLS.DOCX

DO NOT REMOVE
THIS PAGE INTENTIONALLY LEFT BLANK

Section 27 00 00

TECHNOLOGY
(TRADE CONTRACT REQUIRED AS PART OF SECTION 26 00 01)

PART 1 - GENERAL 1

1.1 GENERAL PROVISIONS 1
1.2 RELATED DOCUMENTS 1
1.3 COMMISSIONING 2
1.4 QUALITY ASSURANCE 2
1.5 COOPERATION AND COORDINATION WITH OTHER TRADES 2
1.6 SUBMITTALS 3
1.7 OPERATING INSTRUCTIONS AND MAINTENANCE MANUALS 5
1.8 TELEPHONE/DATA SYSTEM 5
1.9 SYSTEM DESCRIPTION 8
1.10 SCOPE OF WORK 8
1.11 PROTECTION OF WORK AND PROPERTY 9
1.12 SEQUENCING AND SCHEDULING 9
1.13 WARRANTY 10
1.14 MAINTENANCE 11
1.15 SEISMIC REQUIREMENTS 11
1.16 FUNCTION AND OPERATION 11

PART 2 - PRODUCTS 12

2.1 GENERAL 12
2.2 COMMUNICATION EQUIPMENT ROOM FITTINGS 12
2.3 FIBER OPTIC CABLE: 15
2.4 UTP CABLE (BACKBONE) 18
2.5 FIBER INNERDUCT 19
2.6 FIBER DISTRIBUTION 19
2.7 WORK STATION CABLE 20
2.8 MAIN DISTRIBUTION FACILITY (MDF) 22
2.9 INTERMEDIATE DISTRIBUTION FACILITIES 23
2.10 TESTING AND DOCUMENTATION 24
2.11 PUBLIC ADDRESS SYSTEM 26
2.12 WIRELESS MASTER CLOCK SYSTEM 37
2.13 ELEVATOR TELEPHONE LINE FAULT MONITOR 41
2.14 TWO WAY COMMUNICATIONS CALL BOXES 41

PART 3 - EXECUTION 44

3.1 GENERAL 44
3.2 EQUIPMENT RACKS, CABINETS AND BRACKETS 46
3.3 TERMINATIONS 46
3.4 CABLE PATHWAYS 46
3.5 SEALING OF PENETRATIONS AND OPENINGS 47
3.6 SEISMIC SUPPORTS, SUPPLEMENTARY STEEL AND CHANNELS 47
3.7 IDENTIFICATION 49
3.8 CABLE SUPPORTS 50
3.9 CABLE PROTECTION 50

3.10 INSTALLATION 51
3.11 TRAINING....52
3.12 ACCEPTANCE DEMONSTRATIONS 53
3.13 PROJECT OWNER COORDINATION 54
3.14 CLEANING UP 54
3.15 PROJECT CLOSEOUT 54
3.16 SPARE PARTS/ATTIC STOCK:....55

End of Index

Section 27 00 00

TECHNOLOGY
(TRADE CONTRACT REQUIRED AS PART OF SECTION 26 00 01)

PART 1 - GENERAL

1.1 GENERAL PROVISIONS

A. Trade Contract: As provided under Section 26 00 01 – ELECTRICAL TRADE CONTRACT REQUIREMENTS and supplemented under the Bidding Requirements, Contract Forms, and Conditions of the Contract, and applicable parts of Division 1 - GENERAL REQUIREMENTS.

1. Work of this Trade Contract includes all individual specification sections listed in Section 26 00 01.

B. TRADE CONTRACT REQUIRING A PARAGRAPH “E” LISTING on the FORM FOR TRADE CONTRACT required per M.G.L. Chapter 149 Section 44A to 44L, as amended to date. The Electrical Subcontractor will be responsible for all related building preparation and coordination, see specification for additional Paragraph “E” Listing requirements of the Listed Systems Contractor, and coordination of responsibilities.

C. Section 27 00 00 TECHNOLOGY shall be a Trade Subcontract of Section 26 00 01 ELECTRICAL TRADE CONTRACT REQUIREMENTS, requiring a Paragraph “E” Listing on the FORM FOR TRADE CONTRACT.

D. This section shall be provided by a qualified Telecommunications Trade Sub-Contractor.

1. The Telecommunications Sub-Contractor shall be DCAM Certified by the state of Massachusetts Division of Capital Asset Management, in the category of: TELECOMMUNICATIONS SYSTEMS. The Telecommunications Sub-Contractor shall be DCAM Certified by the state of Massachusetts Division of Capital Asset Management, in the category of: TELECOMMUNICATIONS SYSTEMS.

1.2 RELATED DOCUMENTS

A. All of the Contract Documents, including Drawings, General and Supplementary Conditions and Division 01 - General Requirements, apply to the Work of this Section.

B. Carefully examine all of the Contract Documents for requirements which affect the Work of this Section. The exact scope of Work of this Section cannot be determined without a thorough review of all specification Sections and other Contract Documents.

C. Refer to Section 012300, Alternates, for alternates which may affect the work of this Section.

1.3 COMMISSIONING

A. Where indicated in the equipment or commissioning specifications, engage a factory-authorized service representative, to perform startup service as per functional test sheets and requirements of Section 019113 – General Commissioning Requirements and Section 28 08 00 – Commissioning of Electronic Safety and Security.

B. Complete installation and startup checks and functional tests according to Section 01 91 13 – General Commissioning Requirements, Section 28 08 00 – Commissioning of Electronic Safety and Security and manufacturers written instructions.

C. Operational Test: After electrical system has been energized, start units to confirm proper unit operation. Rectify malfunctions, replace defective parts with new one and repeat the start-up procedure.

D. Verify that equipment is installed and commissioned as per requirements of sections 01 91 13, 28 08 00 and manufacturers written instructions/requirements.

1.4 QUALITY ASSURANCE

A. Sustainable Goals: The Architect has designed the project to meet the Owner's sustainable goals. Products and systems have been specified which meet certain third-party evaluations or have particular VOC and source requirements. Evaluation of products proposed for substitution will be evaluated based on the Owner's sustainable goals and other criteria included in Division 01. The Sub-Contractor is encouraged to use sustainable construction practices, means and methods. Unless specifically stated in a specification section, no sustainable design documentation is required of the Telecommunications Sub-Contractor.

1.5 COOPERATION AND COORDINATION WITH OTHER TRADES

A. The work shall be so performed that the progress of the entire building construction, including all other trades, shall not be delayed and not interfered with. Materials and apparatus shall be installed as fast as conditions of the building will permit and must be installed promptly when and as directed.

B. This Section shall be furnish/installed as follows by a single firm/company that is a qualified Telecommunications Sub-Contractor. The Electrical Sub-Contractor shall be responsible for properly preparing the project for installation by Telecommunications Sub-Contractor, as specified.

1. Electrical Sub-Contractor responsibilities shall include: The Electrical Sub-Contractor shall be responsible for furnishing and installing all related building preparation including, but not limited to: outlet boxes with plaster rings, floor boxes, poke through devices, pathways, power, cableways, cable tray, cable protection, wiremold, surface raceways, cable supports, J hooks, conduits with bushings, sleeves with bushings (all conduits, stubs, sleeves, etc. shall be brought to an accessible ceiling or accessible area below floor), pull strings, bonding, grounding, core drilling, cutting, patching, fireproofing of penetration & openings, environmental seals, smoke and fire stopping seals including all conduits, raceways, sleeves, slots etc. where cables pass from one location to another, seismic supports, supplementary steel and channels, etc., for a

completely operational system, as specified. The Electrical Sub-Contractor shall also accept delivery and properly store & secure all equipment and materials required by the Telecommunications Sub-Contractor. The Electrical Sub-Contractor shall install all specialized backboxes and any exterior antennas furnished by Telecommunications Sub-Contractor.

a. The Electrical Sub-Contractor shall provide cable tray over each rack and cabinet as required to facilitate a neat and orderly installation of cables and to secure the top of the racks to the structure. Cables shall drop straight down to equipment racks. Cable trays shall be secured at both ends to the structure and connected together as required for a complete contiguous installation. Utilize proper supports to support the cable tray to the building structure as well as the equipment rack and cabinet. Submit mounting supports for approval before installation.

b. This entire Section: The Electrical Sub-Contractor shall read this section in its entirety and shall provide all requirements of the Electrical Sub-Contractor as detailed in this Section.

2. Telecommunications Sub-Contractor responsibilities for this section shall be: Telecommunications Sub-Contractor shall be responsible for providing, installing, programming, troubleshooting, training and warranty service of all cabling, terminal equipment, headend equipment specified in this section for a completely operational system. The Telecommunications Sub-Contractor shall furnish all specialized backboxes (speaker, microphone, amplifier, etc.) and all exterior antennas to the Electrical Sub-Contractor for their installation.

a. Keep fully informed as to the shape, size and position of all openings required for all apparatus and give information in advance to build openings into the work. The Electrical Sub-Contractor shall furnish and set in place all sleeves, pockets, supports and incidentals.

b. All distribution systems which require pitch or slope such as plumbing drains, steam and condensate piping shall have the right of way over those which do not. Confer with other trades as to the location of pipes, ducts, lights and apparatus and install work to avoid interferences.

c. Coordinate exact locations and roughing in dimensions of all work before installation and make all final connections as required. Any changes required to avoid interferences or to provide adequate clearances for Code and maintenance requirements shall be made at no additional costs.

d. Structural elements of the project shall not be relocated, altered or changed to accommodate the work without written authorization from the Architect.

e. Work that is installed before coordination with other trades or that causes interference with the work of other trades shall be changed to correct condition.

f. Obtain a complete set of Project Drawings and Specifications for coordination and to determine the full scope of work.

g. Attend project coordination meetings to coordinate work of this Section, work of other trades and project and phasing requirements.

1.6 SUBMITTALS

A. Product Data for all materials specified and shown on drawings to be installed.

B. Equipment List: Provide a detailed Equipment List showing quantities by manufacturer and model number of all major items of equipment and installation material to be used in the system as specified herein.

C. Submit supporting hardware for this system as part of the work for approval prior to installation.

D. Product Data: Include complete sets of indexed cut sheets, in quantity as dictated by the project, of all major pieces of equipment and materials being supplied. Arrange these sheets in the order the equipment appears in the Specification. Clearly highlight information showing compliance with this and/or all applicable Specifications. In the event that the manufacturer or representatives' cut sheet contains more than one item, clearly indicate which items of the cut sheet are intended for installation.

E. Shop Drawings: Submit a set of complete Shop Drawings, by system, showing equipment to be installed. Include system configuration block diagrams of all equipment, indicating equipment type and model numbers. Show each and every component, system and subsystem, as well as all proposed connections between system components, and proposed layouts of equipment racks for the entire system.

1. System Labeling Schedules: Electronic copy of labeling schedules, in software and format selected by Owner.
2. Cabling administration drawings and printouts.
3. Wiring diagrams to show typical wiring schematics including the cross-connects.
4. Cross-connects. Detail mounting assemblies and show elevations and physical relationship between the installed components.
5. Cross-connects and patch panels. Detail mounting assemblies and show elevations and physical relationship between the installed components.
6. Cable tray layout showing cable tray route to scale with relationship between the tray and adjacent structural, electrical and mechanical elements.

F. Quality Assurance Submittals:

1. Provide manufacturer's certification that Installer is qualified to install systems specified.
2. Provide names, qualifications, and certifications of installation personnel including Communication Systems Installer's site Supervisor/Foreman who shall be in charge of, and responsible for, all activities at the job site for the duration of the Project. The job Supervisor/Foreman shall not be changed during the project without notification and approval from the Owner.
3. Complete warranty information including sample Registration Certificate.
4. Technical Diagrams and Drawings:
   a. Simplified single line block diagrams showing the interconnection of all equipment and functional relationships. Show all equipment, patch panels, cables and jacks, whether connected or not. The intent of these diagrams is to provide sufficient clear and complete information that a technician of average skill may efficiently troubleshoot and service the system, even if unfamiliar with the installation.

b. Provide "As Built" architectural quality plan Drawings at 1/8 in. = 1 ft.-0 in. scale. Provide an electronic copy of the “As Built” drawings on CD(s). As-Built Drawings shall include all device addresses.

c. All technical diagrams and drawings shall be mounted on the wall behind a clear plastic cover for protection. There shall be 1 set of the above drawings and diagrams provided per equipment room, this includes both the MDF Room and all IDFs.

1.7 OPERATING INSTRUCTIONS AND MAINTENANCE MANUALS

A. Refer to Division 01 – General Requirements.

1.8 TELEPHONE/DATA SYSTEM

A. General:

1. All telecommunication and data system interconnecting wiring, terminal blocks, connections, terminations, shall be furnished and installed by a licensed and certified installer.

2. The Electrical Sub-Contractor (E.C.) shall furnish and install all raceways, and outlet boxes as indicated on the drawings, including pull wires for all empty raceways and all access panels. General Contractor will furnish and install all backboards (3/4 in. thick by 78 in. high) which shall be mounted at the MDF room and each IDF room.

3. General Requirements:

a. Applicable Standards:

1) Materials and equipment shall be installed in accordance with the most current versions of the National Electrical Code, local codes, safety codes, ANSI, ASTM, EIA, TIA, BISCI, IEEE, UL, NFPA.

b. The following industry standards are the basis for the structured cabling system described in this document.

- ANSI/TIA/EIA
- TIA/EIA-568-B — Commercial Building Telecommunications Cabling Standard
- TIA/EIA-568-B.1 — General Requirements
- TIA/EIA-568-B.2 — Balanced Twisted Pair Cabling Components Standard
- TIA/EIA-568-B.3 — Optical Fiber Cabling Components Standard
- TIA/EIA - 942 — Telecommunications Infrastructure for Data Centers
- TIA/EIA-569-A — Commercial Building Standard for Telecommunications

		Pathway and Spaces
•	TIA/EIA-606-A	Administration Standard for the Telecommunications Infrastructure of Commercial Buildings
•	J-STD-607-A	Commercial Building Grounding/Bonding Requirements NFPA
•	NFPA 70	National Electric Code (NEC) ISO/IEC
•	ISO 11801	Generic Cabling for Customer Premises
•	EIA/TIA-TSB 67.	Telecommunications Systems Bulletin, Additional Transmission Specifications for Unshielded Twisted-Pair Cabling Systems"
•	EIA/TIA-455-61.	"FOTP-61, Measurement of Fiber or Cable Attenuation Using an OTDR".
•	IEEE 802.3	"Carrier Sense Multiple Access with Collision Detection".
•	ATM Forum Standard for 155 Mb/s ATM over Category 6 (AF-PHY-0015.000, 9/94)	
•	BISCI:	Telecommunications Distribution Methods and LAN Design Manual
•	IEEE-802:	Standards for Local Area Networking
•	UL	Performance Levels Certification Program
•	ANSI-IEEE-C2:	National Electrical Safety Code (NESC)
•	ANSI/NFPA-101:	Life Safety Code
•	Massachusetts Electric Code CMR527	

c. Exposed wiring is not acceptable in any occupied space.

d. Sub-Contractor is responsible for strict adherence to Massachusetts electrical codes, and all other applicable codes.

e. The Sub-Contractor is responsible for obtaining municipal permits and inspections as mandated by law.

f. All exposed cabling shall be run in raceway or conduit.

g. All penetrations in station raceway shall have rubber or equivalent grommets to prevent cable cuts on trough edges.

h. Raceway shall be of sufficient size to accommodate all wiring. Fill density not to exceed 40 percent, unless otherwise noted. It is the responsibility of the bidder to determine the size needed based upon the floor plans provided. A minimum size of 1 in. conduit shall be adhered to, U.N.O or approval by the engineer.

i. All raceways shall be attached to the building structure using screws and anchors.

j. The I.T. Sub-Contractor is responsible for all aspects of MDF & IDF construction. Refer to drawings for configuration of each IDF and MDF.

k. All cabling at the MDF and IDFs shall be neatly bundled and dressed to the termination blocks. All appropriate cable management materials (slotted duct, D rings, etc.) should be utilized for this purpose. All wiring at IDF cabinets shall be installed concealed.

l. All labeling of cables shall be 6 in. back from the termination with machine generated labels, hand written labels are not permitted.

m. All cable pulls in conduit, raceway, innerduct, etc. shall have pull string left in place for future use.

n. Color code identification of cables must be maintained throughout all splices.

o. All station cabling shall be clearly and legibly labeled at both the faceplate end and the IDF/MDF termination blocks. In addition to labeling both the inside of the faceplates and IDF/MDF termination blocks, the cable jacket shall be labeled six inches back from the terminations on both ends. Labeling shall be machine generated.

p. Labeling of the outside of the jack with identification numbers shall be made using a Panduit LS8 handheld label machine or equal. Samples shall be provided to Engineer for approval prior to installation, the labeling scheme shall be submitted for review and approval, coordinate with the Schools IT Department prior to submitting.

q. In order to qualify for installation of the data communications system, Sub-Contractor must possess the required license classification, a performance history, experience in the installation and termination of optical fiber cable systems, and proof of time in business. Sub-Contractor must be trained and certified for the communications cable and hardware which it installs, and must furnish proof of certification.

r. License Classification: Sub-Contractor must possess a valid state Sub-Contractor's License.

B. Unless otherwise indicated, the following work is not included as part of the systems integrator's responsibilities in this SECTION, except for coordination, and is to be performed by others as indicated:

1. Raceway shall be provided by the Electrical Sub-Contractor.
2. Empty conduits to accessible point above ceiling or below floor shall be provided by the Electrical Sub-Contractor.
3. Floor boxes and poke through devices shall be provided by the Electrical Sub-Contractor.
4. Standard device boxes with plaster rings for data and Integrated Instructional Technology Network System shall be provided by the Electrical Sub-Contractor.
5. Clock system backboxes and specialty pigtail connectors shall be installed by the Electrical Sub-Contractor and provided by this systems integrator. 120V wiring by Electrical Sub-Contractor.
6. Speaker/paging system backboxes shall be installed by the Electrical Sub-Contractor and provided by this systems integrator.
7. Structural blocking to support wall and ceiling mounted televisions/monitors shall be provided by the Construction Manager.
8. Interface with public utilities telephone service shall be arranged by the owner, and coordinated with this systems integrator.
9. Telephone equipment and handsets will be provided under a separate contract.
10. DEFINITIONS

C. Main Cross Connect (MC): The MC is the location, within a building or complex of buildings, where the entire telecommunications system originates. It may include: the physical location, enclosure, wire and cable management hardware, termination hardware, distribution hardware, and patching and equipment racks.

D. Horizontal Cross Connect (HC): The HC is the location in a building where a transition between the backbone or vertical riser system and the horizontal distribution system occurs.

1.9 SYSTEM DESCRIPTION

A. The data communications system shall consist of four components, active switch equipment, an optical fiber backbone, a copper twisted-pair backbone, and twisted pair copper work station cabling.

1.10 SCOPE OF WORK

A. The work under this Section includes providing of all material, labor, equipment and supplies and the performance of all operations to provide a complete working Integrated Instructional Technology Network System as required by the Drawings and details and as specified herein. Where the Drawings, Specifications, Codes, Regulations, Laws, or the requirements of the local Authority conflict, provide the higher quality and higher quantity indicated or required and follow the strictest requirement. In general, the work includes, but is not limited to, the following:

1. Cabling for Sound and Clock per manufacturers requirements.
2. Equipment Racks and Cabinets.
3. Protection of new and existing work.

4. Record Drawings and Documentation.
5. Operation and Maintenance Instructions and Manuals for the Section's work.
6. Nameplates, Labels and Tags.
7. Testing and certification.
8. Sound, Public Address, Master Clock.

1.11 PROTECTION OF WORK AND PROPERTY

A. Be responsible for the care and protection of all work included under this Section until it has been tested and accepted.

B. Protect all equipment and materials from damage from all causes including theft. All materials and equipment damaged or stolen shall be replaced with equal material or equipment at the option of the Architect and Owner.

C. Materials and equipment stored for this project shall be protected and maintained according to the manufacturer's recommendations and requirements and according to the applicable requirements of NFPA 70B.

D. Protect all equipment, outlets and openings with temporary plugs, caps and covers. Protect work and materials of other trades from damage that might be caused by work or workmen and make good any damage caused.

E. Use caution to avoid damage to existing work, and to prevent harm to personnel working in all areas.

F. Observe all safety precautions and requirements for the construction.

G. When open-flame or spark producing tools such as blower torches, welding equipment, etc., are required in the process of executing the work, the General Contractor shall be notified not less than twenty-four hours in advance of the time that the work is to begin and the location where the work is to be performed. Provide, where necessary, fire protective covering and maintain a constant non-working fire watch where work is being performed and until it is completed.

H. The General Contractor and the Installer are responsible for initiating, maintaining, and supervising all safety precautions and requirements during construction.

1.12 SEQUENCING AND SCHEDULING

A. Coordinate the work of this Section with the respective trades responsible for installing interface work, and ensure that the work performed hereunder is acceptable to such trades for the installation of their work.

B. Continuity of all services shall be maintained in all areas which will be occupied or temporarily relocated during the construction period. If an interruption of service becomes necessary, such shall be scheduled in advance, made only upon consent of the Owner and at a time outside normal working hours as the Owner shall designate.

C. Refer to the overall scheduling of the work of the project. Schedule work, process Submittal and order materials and equipment to conform to this schedule and install work to not delay nor interfere with the progress of the project.

D. Inform Architect immediately of any delays or potential delays. Furnish manufacturer's letter to verify order date, equipment delays, expected shipment date, order number, and potential remedies to speed up delivery. Any costs to speed up delivery shall be implemented at no cost to the project if the equipment or material was not ordered as soon as possible after Contract award or within the time frames indicated with the Submittal.

E. Be aware of, and plan for, project scheduling and phasing. Provide for complete continuous operation of all systems. Coordinate scheduling and phasing with the Architect, Owner, other Trades, and the General Contractor.

1.13 WARRANTY

A. Voice and Data Cabling Warranty: The products that shall best support the needs of the project and provide the highest level of system performance over the life of the facility, shall be a voice and data cabling system that is made up of system components designed, manufactured and installed as a total system solution. This requirement also applies to data patch cords specified in this Section; e.g. Ortronics patch cords shall be used with Ortronics jacks and patch panels.

B. Provide a Manufacturer's Extended Product Warranty that covers product defects for all passive components of the Voice and Data Cabling System. Passive components are defined as those exhibiting no gain or contributing no energy to the Data Cabling System and include but are not limited to cabling, connectors, outlets, patch panels, patch cords, racks as outlined in PART 2 of this Specification.

1. The following shall be covered by the Manufacturer's Extended Product Warranty:

a. All passive components that comprise the Voice and Data Cabling System will be free from manufacturing defects in material of workmanship under normal and proper use.

b. All passive components that comprise the Voice and Data Cabling System shall exceed the specifications of ANSI/TIA/EIA 568B series, and exceed ISO/IEC 11801 standards, including all subsequent changes to these standards that are in effect at the time of bidding, and shall meet or exceed the performance specifications as outlined in PART 2 of this Specification.

c. The installation shall exceed the insertion and return loss, attenuation and near end crosstalk (NEXT) requirements of ANSI/TIA/EIA 568B series and the ISO/IEC 11801 standards for cabling links/channel configurations specified in these standards including all subsequent changes to these standards that are in effect at the time of bidding.

d. Each Voice and Data Channel shall be capable of delivering data at 1.2 Gbps between active network electronics. A Data Channel is comprised of all passive components including cabling, connectors, patch panel port, and patch cords, with up to a total of 4 connections between Owner's network electronics (not in the contract).

2. Upon successful completion of the Voice and Data Cabling System installation by the Communication Systems Installer, and subsequent inspection by an authorized representative of the Manufacturer of the passive components, the Owner shall be provided with Registration Certificate, from the Manufacturer, registering the Installation.

3. Duration of Warranty: The warranty shall run for 20 years from the Date of Substantial Completion of the Project.
4. The Extended Product Warranty is applicable to the Voice and Data Cabling System passive components at the original site of installation. Under the Extended Product Warranty, the Manufacturer of the passive components shall either repair or replace the defective product(s) at the Manufacturers cost. This includes the replacement or repair cost of defective materials and the cost of labor to repair or replace any and all defective products.
5. The Communication Systems Installer shall provide a Manufacturer's warranty that the Voice and Data Cabling System shall be free from defects which prevent operation of the specific applications for which the original Voice and Data Cabling System was designed to support, including but not limited to: 10Base-T; 100Base-T; 52/155 Mbps ATM; 622Mbps 64-CAP ATM; 1000Base-T Gigabit Ethernet.

1.14 MAINTENANCE

A. Provide installers maintenance contract quote, upon request, for a period equal to warranty.

B. Upon receipt of notice from the Owner of failure of any part of the systems during the warranty period, the affected parts shall be replaced. Any equipment requiring excessive service consisting of more than two unscheduled service calls, shall be considered defective and shall be replaced.

C. Response times to warranty issues shall differ according to the level of the problem.
1. A problem is considered to be corrected when the system and its components operate according to specified requirements.
2. Warranty work shall be performed according to the procedures of the Owner, its staff and tenants and their normal operations.

1.15 SEISMIC REQUIREMENTS

A. Equipment and work shall meet the restraint requirements per the Massachusetts Building Code.

1.16 FUNCTION AND OPERATION

A. The intended function of the data communications cable system is to transmit data signals from a central location to several individual data outlet locations. Upon completion of the work outlined in this specification, the system shall be capable of transmitting data signals at a rate of 1000 Mbps.

B. The multimode optical fiber cable system shall be capable of transmitting signals with a minimum bandwidth of 500 MHz at both 850 or 1300 nm. The cumulative signal loss, through connectors, jumpers, couplers, and fiber cable, shall be less than 10 dB. The singlemode optical fiber cable system shall be capable of transmitting signals with a bandwidth of up to 500 MHz at both 1300 and 1550 nm. The cumulative signal loss, through connectors, jumpers, couplers, and fiber cable, shall be less than 10 dB.

C. Work station cable, from the HC to the work area, shall be installed in accordance with EIA/TIA-568-A specified installation practices, EIA/TIA TSB 67 recommended installation practices, manufacturer specified installation practices, and shall be capable of transmitting a signal at 1000 Mbps with acceptable attenuation and cross-talk measurements. The entire work station cable system, including wiring blocks, cable, and telecommunications outlets shall be tested for Category 6 compliance.

PART 2 - PRODUCTS

2.1 GENERAL

A. Throughout Part 2, material quantities are given. These quantities are given for reference purposes only. It is the responsibility of the Sub-Contractor to provide appropriate quantities of materials to provide a complete, functional system.

B. Equipment shall be installed in accordance with Technology drawings. General installation provisions are as follows:

1. Equipment Racks: Equipment racks shall be assembled and mounted in locations shown in the Drawings and as described herein. Each rack shall be assembled in accordance with the manufacturer's instructions and recommendations. Each rack shall be mounted such that the side rails are plumb. Each rack shall be affixed to the building structure at each of the mounting holes provided. Attachment shall be by 1/2 in X 1-1/4 in. lag bolts. A 3/8" pilot hole shall be drilled for each lag bolt. Each bolt shall be tightened to the extent that it holds the mounting hardware firmly, but not so tight as to distort the hardware or strip the threads. Equipment racks are to be co-located with the quadplex power outlets to allow for easy connection of racked equipment to the power system of the school.
2. Wiring Blocks and Wire Management Components: Where required, wiring blocks and wire management components shall be mounted to the plywood backboard. Wiring blocks and wire management shall be mounted in accordance with the attached drawings. Each device shall be mounted such that its horizontal dimension is level. In cases where more than one device is mounted, they shall be aligned vertically. Each device shall be affixed to the plywood backboard by means of screws suitable for fastening to plywood. A minimum of four of the mounting holes provided shall be utilized for fastening. Screws shall be tightened to the extent that they hold the device snug to the backboard, but not so tight as to distort or damage the device. Wiring blocks shall be terminated in accordance with the manufacturer's instructions and recommendations. Installation of accessories shall also be conducted in accordance with the manufacturer's instructions and recommendations.

2.2 COMMUNICATION EQUIPMENT ROOM FITTINGS

A. SUMMARY
Section Includes:

1. Telecommunications mounting elements.
2. Pathways
3. Telecommunications equipment racks and cabinets
4. Grounding.

B. COORDINATION: Coordinate layout and installation of communications equipment with Owner's telecommunications and LAN equipment and service suppliers. Coordinate service entrance arrangement with local exchange carrier.

1. Meet jointly with telecommunications and LAN equipment suppliers, local exchange carrier representatives, and Owner to exchange information and agree on details of equipment arrangements and installation interfaces.
2. Record agreements reached in meetings and distribute them to other participants.
3. Adjust arrangements and locations of distribution frames, cross-connects, and patch panels in equipment rooms to accommodate and optimize arrangement and space requirements of telephone switch and LAN equipment.
4. Adjust arrangements and locations of equipment with distribution frames, cross-connects, and patch panels of cabling systems of other communications, electronic safety and security, and related systems that share space in the equipment room.
5. Coordinate location of power raceways and receptacles with locations of communications equipment requiring electrical power to operate.

C. PATHWAYS

1. General Requirements: Comply with TIA/EIA-569-A.
2. Cable Support: NRTL labeled. Cable support brackets shall be designed to prevent degradation of cable performance and pinch points that could damage cable. Cable tie slots fasten cable ties to brackets.
   a. Comply with NFPA 70 and UL 2043 for fire-resistant and low-smoke-producing characteristics.
   b. Support brackets with cable tie slots for fastening cable ties to brackets.
   c. Lacing bars, spools, J-hooks, and D-rings.
   d. Straps and other devices.

D. EQUIPMENT FRAMES (RACKS)

1. Manufacturers:
   a. APC
   b. Cooper B-Line, Inc.
   c. Hubbell Premise Wiring.
   d. Panduit
   e. Or equal
2. General Frame Requirements:
   a. Distribution Frames: Freestanding and wall-mounting, modular-steel units designed for telecommunications terminal support and coordinated with dimensions of units to be supported.
   b. Module Dimension: Width compatible with EIA 310 standard, 19-inch panel mounting.
   c. Finish: Manufacturer's standard, baked-polyester powder coat.

3. Floor-Mounted Racks: Modular-type, four-post quick rail, aluminum construction.
    a. Vertical and horizontal cable management channels, top and bottom cable troughs, grounding lug, and a power strip.
    b. Baked-polyester powder coat finish.
4. Equipment Cabinets:
    a. 42RU, 24 in. W x 42 in. D.
    b. Steel construction.
    c. Treated to resist corrosion.
    d. Perforated front and rear doors.
    e. Lockable front and rear doors.
    f. Louvered side panels.
    g. Cable access provisions top and bottom.
    h. Grounding lug.
    i. Rack-mounted, 250-cfm fan.
    j. 19 in. Dual slide rack mount monitor keyboard drawer (provide two)
    k. Power strip provide two.
    l. All cabinets keyed alike.
    m. Regulatory approvals: EIA-310-D
    n. Warranty: 5-years
    o. Standards: UL 60950
5. Cable Management for Equipment Frames:
    a. Metal, with integral wire retaining fingers.
    b. Baked-polyester powder coat finish.
    c. Vertical cable management panels shall have front and rear channels, with covers.
    d. Provide horizontal crossover cable manager at the top of each relay rack, with a minimum height of two rack units each.
6. Power Strips: Comply with UL 1363.
    a. Rack mounting.
    b. Receptacles: Six 20-A, 120-V ac, NEMA WD 6, Configuration 5-20R receptacles for each power strip. Provide three in each rack.
    c. LED indicator lights for power and protection status.
    d. LED indicator lights for reverse polarity and open outlet ground.
    e. Circuit Breaker and Thermal Fusing: When protection is lost, circuit opens and cannot be reset.
    f. Cord connected with 15-foot line cord.
    g. Rocker-type on-off switch, illuminated when in on position.
    h. Peak Single-Impulse Surge Current Rating: 33 kA per phase.

i. Protection modes shall be line to neutral, line to ground, and neutral to ground. UL 1449 clamping voltage for all 3 modes shall be not more than 330 V.

E. GROUNDING

1. Comply with requirements in 260000 Section "Grounding and Bonding for Electrical Systems." for grounding conductors and connectors.
2. Telecommunications Main Bus Bar:
   a. Connectors: Mechanical type, cast silicon bronze, solderless exothermic-type wire terminals, and long-barrel, two-bolt connection to ground bus bar.
   b. Ground Bus Bar: Copper, minimum 1/4-inch-thick by 4 inches wide with 9/32-inch holes spaced 1-1/8 inches apart.
   c. Stand-Off Insulators: Comply with UL 891 for use in switchboards, 600 V. Lexan or PVC, impulse tested at 5000 V.
   d. Comply with ANSI-J-STD-607-A.

F. LABELING

1. Comply with TIA/EIA-606-A and UL 969 for a system of labeling materials, including label stocks, laminating adhesives, and inks used by label printers.

2.3 FIBER OPTIC CABLE:

A. Fiber: The following cable specifications shall also be met by the cable manufacturer for fiber optic cable:

1. Multimode Optical Fiber Cabling: Multimode optical fiber cables shall be laser-optimized 50/125µm capable of supporting 10G/S data rates for distances up to 300 meters. Multimode optical fiber cables shall meet all of the requirements delineated within the specifications of ANSI/TIA/EIA-568-B1, B2, B3 and ISO/IEC 11801, 50/125 fiber shall be as noted in Table 1and 2.

Table 1
Minimum Performance Parameters for LightSystem™ Cables Containing laser optimized 50/125 Multimode Fiber

Fiber	Maximum Attenuation (dB/km)		Minimum Bandwidth (MHz-km)		Guaranteed Transmission Distance (m)	
	@ 850 nm	@ 1300 nm	@ 850 nm	@ 1300 nm	@ 850 nm	@ 1300 nm
Laser Optimized 50/125µm	3.5	1.0	1500	500	300	550

2. Singlemode Optical Fiber Cable:
   a. Singlemode mode LightSystemTMal fiber cables shall meet all of the requirements delineated within the specifications as listed in section 1 except that the attenuation and zero dispersion limits shall be as noted in Table 3 and 4.

TABLE 3
Minimum Performance Parameters for LightSystem™ Cables Containing Singlemode Fiber

Fiber	Cable Type	Maximum Attenuation (dB/km)		Zero Dispersion	
		@ 1310 nm	@ 1550 nm	Wavelength (nm)	Slope (nm2-km)
Singlemode	Inside Plant	1.0	1.0	1300-1324	< 0.093
	Outside Plant	0.5	0.5		

TABLE 4
Minimum Performance Parameters for LightSystem PlusTM Cables Containing Singlemode Fiber

Fiber	Cable Type	Maximum Attenuation (dB/km)		Zero Dispersion	
		@ 1310 nm	@ 1550 nm	Wavelength (nm)	Slope (nm2-km)
Singlemode	Inside Plant	0.5	0.5	1300-1320	< 0.092
	Outside Plant	0.4	0.3		

3. Attenuation:
   a. The LightSystem™ cable as noted in Tables 1 and 3 and LightSystem PlusTM as noted in Tables 4 cable shall perform in accordance with the attenuation limits when tested per ANSI/EIA/TIA-455-46, -53, -61 or -78 (as applicable).
4. Bandwidth:
   a. LightSystem™ as noted in Table 1 cable and LightSystem PlusTM cable as noted in Table 2 shall perform in accordance with the bandwidth limits when tested per ANSI/EIA/TIA-455-51 or ISO/IEC 793-1-C2A
5. Transmission distance:
   a. The protocol pertinent to the transmission distance noted in Table 2 for LightSystem PlusTM cable is 10 Gigabit Ethernet per IEEE 802.3z.
6. Zero Dispersion Wavelength and Slope:
   a. LightSystem™ cable shall perform as noted in Table 3 and LightSystem Plus™ cable as noted in Table 4 in accordance with the Zero Dispersion wavelength and slope limits when tested per ANSI/EIA/TIA-455-168, -169, or -175 (as applicable).
7. Fiber Laser Optimized 50/125 μm Multimode Optical fiber cables shall be manufactured by one of the following:
   a. Berk-Tek
   b. Commscope
   c. General Cable
   d. Mohawk
   e. Optical Cable Corporation
   f. Or equal

g. Be a minimum of twelve strands of Laser Optimized 50/125 μm multimode optical fiber for horizontal cabling.

h. Be appropriate for the environment in which it is installed.

8. Fiber equipment cords shall:

a. Be available in standard lengths of 1, 3, and 5 meters, custom lengths shall also be available, and shall meet or exceed standards as defined in ANSI/TIA/EIA-568-A and ISO/IEC 11801.

b. Utilize duplex fiber cable that is 50/125 micron multimode, OFNR riser grade, and meets the requirements of UL 1666.

c. Utilize cable where the attenuation shall not exceed 3.5 dB/km @ 850 nm wavelength or 1.0 dB/km @ 1300 nm.

d. Have a cable jacket color for Laser Optimized 50/125 in aqua.

e. The connectors shall be SC or ST in accordance with TIA/EIA-568-A and must include a ceramic ferrule.

f. Have ST connectors with a metal coupling nut.

g. Have a minimum return loss of 20 dB (25 dB typical) at both 850 nm & 1300 nm.

h. Be made by an ISO 9001 and 14001 Certified Manufacturer.

i. Be UL 1666 approved.

j. Siemon Company FJ Series Fiber Jumpers Recommended Category 6.

9. Coordinate fiber patch cords with Owner prior to release. Provide SC to LC, ST to LC, or any combination of the two. Provide one per fiber port.

10. Warning Tags: At each location where the fiber cable is exposed to human intrusion, it shall be marked with warning tags. These tags shall be yellow or orange in color, and shall contain the warning: "CAUTION FIBER OPTIC CABLE". The text shall be permanent, black, block characters, and at least 3/16" high. A warning tag shall be permanently affixed to each exposed cable or bundle of cables, at intervals of not more than five (5) feet. Any section of exposed cable which is less than five (5) feet in length shall have at least one warning tag affixed to it.

11. T-Bar Suspended Ceilings: Copper station cabling may be run outside of conduits and above T-Bar suspended ceilings when available, at the option of the installer. Cables installed in this fashion are to be run horizontally in bundles and tied down neatly, well clear of any light fixtures or other electrical appliances that may affect data transmissions.

B. Optical fiber Interconnect Equipment: Interconnect equipment may be mounted either on the plywood backboard or in the equipment racks, depending on the particular application. When mounted on the backboard, the horizontal dimension shall be level. A minimum of four of the mounting holes provided shall be utilized for fastening. Screws shall be tightened to the extent that they hold the device snug to the backboard, but not so tight as to distort or damage the device. Interconnect equipment mounted in racks shall be affixed to the rack by at least four screws. The screws shall be of the correct size and thread configuration for the holes in the rack. They shall be tightened to the extent that they hold the equipment firmly to the rack, without distorting the equipment or stripping the threads.

C. All optical fiber interconnect devices shall be assembled and installed in accordance with the manufacturer's instructions and recommendations. All large openings into wall mounted cabinets shall be covered by a grommet.

2.4 UTP CABLE (BACKBONE)

A. Manufacturers: Subject to compliance with requirements, provide products by one of the following:
   1. Belden CDT Inc.; Electronics Division.
   2. CommScope
   3. Mohawk; a division of Belden CDT.
   4. Molex
   5. Superior Essex Inc.
   6. Or equal

B. Description: Multi-pair Backbone Cable: Category 5e, 100-ohm, 25-pair UTP binder groups covered with a gray thermoplastic jacket.
   1. Comply with ICEA S-90-661 for mechanical properties.
   2. Comply with TIA/EIA-568-B.1 for performance specifications.
   3. Comply with TIA/EIA-568-B.2, Category 5e.
   4. Listed and labeled by an NRTL acceptable to authorities having jurisdiction as complying with UL 444 and NFPA 70 for the following types:
      a. Communications: Type CMP, complying with NFPA 262.

C. Multi-pair backbone cables: Provide copper backbone cable that meets or exceeds the following specifications:
   1. Electrical Specifications:

Maximum DC Resistance	28.6 Ω/1,000 ft (9.4 Ω/100m)
Maximum DC Resistance Unbalanced	5 percent
Maximum Capacitance Unbalanced (pair to ground)	1,000 pF/1000 ft. (328 pF/m)
Mutual Capacitance @ 1kHz	18 nF/1000 ft (5.9 nF/100 m), max.

   2. Attenuation (dB/100 m [328 ft.]):

Frequency	Attenuation (Max.)
1.00 MHz	2.3 dB
4.00 MHz	4.9 dB
10.00 MHz	8.5 dB
16.00 MHz	12 dB

   3. Worst Pair Near-End Crosstalk (NEXT) dB/100 m [328 ft]:

Frequency	Pair-To-Pair NEXT (Max.)
1.0 MHz	13.8 dB
4.0 MHz	11.2 dB
10.0 MHz	10.2 dB
16.0 MHz	9.2 dB

2.5 FIBER INNERDUCT

A. DESCRIPTION: From the MDF to each IDF, segments of optical fiber innerduct shall be installed.

1. Quantities Required: Innerduct runs do not have to be continuous throughout, breaks are expected at the pull boxes. Sub-Contractor is responsible for determination of actual lengths of innerduct required. Enough innerduct shall be provided and installed to extend from the fiber service loop in the MDF to the fiber service loop in each IDF. If the route passes through a pull box, the segments of innerduct shall extend twelve inches into the pull box. If the route passes through an enroute HC, each segment of innerduct shall extend at least twelve inches beyond the end of the service conduit.

B. INSTALLATION: Fiber innerduct shall be installed in accordance with manufacturer's instructions and industry standards. Within the equipment rooms, the innerduct shall extend from the end of conduit to four feet above the floor and shall be affixed to the backboard by means of clamps designed for that purpose. Care shall be taken to avoid kinking the innerduct or applying excessive tension during the installation process.

2.6 FIBER DISTRIBUTION

A. DESCRIPTION: From the MDF to each IDF a continuous segment of fiber cable shall be provided.

1. Product: 12 strands multi-mode 50/125 UM OM3 laser optimized
2. Quantities Required: The Sub-Contractor is responsible for determination of actual segment lengths. Actual quantities will be determined by the routing established by the electrical engineer.
3. Required Accessories and Quantities:
   a. Kit of Parts: Sufficient quantities to block and buffer both ends of each cable segment.
   b. Sealant: Sealant sufficient quantities to block each end of each cable segment.

B. INSTALLATION: Installation shall be conducted following guidelines established by the product manufacturer and industry standards.

1. Fiber Optic Cable: During installation of the optical fiber cable segments into the conduit system, special care shall be taken to avoid damage to the cable. While under pulling tension, the cable shall not be bent into a curve with a radius of less than 20 times the cable diameter. Pulling tension shall not exceed manufacturer's recommended maximum tensile load. Sub-Contractor shall utilize a winch with tension control or a "break-away" link designed to break away at or below the recommended maximum tension.

C. The optical fiber cable shall be routed through the existing conduit and onto the appropriate rack mounted LIU or HC backboard. Routing on the backboard shall be straight and plumb. A minimum ten foot service loop shall be provided at each terminal location. Refer to Drawings for cable configuration.

D. Label each fiber optic cable at each end per ANSI/TIA-606A

1. Provide a unique backbone cable identifier that shall be assigned to each backbone cable between two TSs in one building. The building-backbone cable identifier shall be marked on each end of the cable within 300 mm (12 inches) of the end of the cable jacket.
   a. The backbone cable shall have the format FS1/FS2-N, where:
   b. FS1 is the TS identifier for the space containing the termination of one end of the backbone cable;
   c. FS2 is the TS identifier for the space containing the termination of the other end of the backbone cable;
   d. N is one or two alphanumeric characters identifying a single cable withone end terminated in the TS designated FS1, and the other end terminated in the TS designated FS2.
2. Provide Panduit Label core Fiber optic cable identification system or equal for all fiber connections.
3. Provide labeling for each single optical fiber in a backbone between two TSs in one building that shall be marked on the front of the patch panel, the IDC connector labeling strip, or the optical-fiber patch panel. The identifier (FS1/FS2-N.D) shall be labeled in a way that clearly identifies the associated pair or optical fiber. This requirement may be met by marking the FS1/ FS2-N portion of the identifier on each patch panel, IDC connector, or group of IDC connectors, and the D portion of the identifier by each port or section of an IDC connector terminating the pair or optical fiber.
   a. The FS1/FS2-N.D format breaks down as follows:
      1) FS1/FS2-N is a building backbone cable identifier;
      2) D is two to four numeric characters identifying a single optical fiber.

2.7 WORK STATION CABLE

A. DESCRIPTION: From each MDF or IDF, 4-pair enhanced Category 6A cables shall be routed to each work station (data outlets). Category 6A shall be installed for wireless access node outlets per Technology Drawings.

1. Product:
   a. Copper 4-pair UTP:
      1) UTP cables shall:
         a) Be manufactured by one of the following:
            - Hitatchi Cable Manchester
            - Hubbell Premise Wiring
            - Berk-Tek
            - Commscope
            - General Cable
            - Mohawk
            - Or equal

2. Required Accessories and Quantities (Hard Wall Locations):
   a. Work Station: shall be metal with ivory or white finish (refer to drawings), Single Gang, Single Port Face plate. Using Panduit CMB**-X blank modules to fill unused ports. Refer to drawings for two, three, and four gang configurations. Modules shall be CJ688TP** – color to be selected by engineer.
3. CAT6A cables shall be small diameter cable. The nominal cable outside diameter shall be no greater than 0.27 in. and distance limitations shall be no less than 295 ft.
4. Cable Color configuration:
   a. - Green - Wireless
   b. - Black - Security/Card Access
   c. - Blue - VoIP
   d. - Blue - Data
5. Work Area Equipment Cords: The Work Area Equipment Cords shall meet or exceed the following criteria:
6. Modular Equipment Cords: Category 6/6A cable
7. Category 6A, modular equipment cords shall:
   a. Be round, and consist of eight insulated 24 AWG, stranded copper conductors, arranged in four color-coded twisted-pairs within a flame-retardant jacket.
   b. Be equipped with modular 8-position (RJ45 style) plugs on both ends, wired straight-through with standards compliant wiring.
8. Use modular plugs which exceed FCC CFR 47 part 68 subpart F and IEC 60603-7 specifications, and have 50 micro-inches minimum of gold plating over nickel contacts.
9. Be resistant to corrosion from humidity, extreme temperatures, and airborne contaminants.
10. Utilize cable that exhibit power sum NEXT performance.
    a. Be available in several colors with or without color strain relief boots featuring a snagless design.
    b. Provide one 10 foot cord per data jack shown on drawings.
    c. Be made by an ISO 9001 and 14001 Certified Manufacturer.
    d. Electrical Specifications:
    e. DC resistance per lead: 9.38 Ω / 100 m maximum.
    f. Input impedance without averaging: 100 Ω + 15 percent from 1 to 100 MHz.
    g. 100 percent transmission tested with laboratory grade network analyzers for proper performance up to 1000 MHz. Vendor shall guarantee cords are compatible with category 6A links/3A links.
11. UL VERIFIED (or equivalent) for TIA/EIA proposed category 6A electrical performance.
12. UL LISTED 1863.

13. All information outlets for 100 Ω 22-26 AWG copper cable shall:
    a. Be available in black, white, gray, ivory and light ivory.
    b. Accommodate a minimum of two 8-position / 8-conductor modular jacks.
    c. Utilize compliant pin technology 110 style insulation displacement connectors which allows the use of a 4-pair impact tool.
    d. Allow for a minimum of 200 re-terminations without signal degradation below standards compliance limit.
    e. Be constructed of high impact, flame-retardant thermoplastic.
    f. Be available in a screened version for 100 Ω ScTP cable.
    g. Be made by an ISO 9001 and 14001 Certified Manufacturer.
    h. Electrical Specifications:
    i. ANSI/TIA/EIA-568-B1, B2, B3 and ISO/IEC 11801 proposed category 6A compliant.

B. INSTALLATION: Installation shall be conducted in accordance with guidelines established the manufacturer and industry standards. Wall Plates shall be mounted such that their vertical dimension is plumb. Each wall plate shall be labeled with its respective work station number. Each modular mounting frame shall be labeled with its respective work station number.

2.8 MAIN DISTRIBUTION FACILITY (MDF)

A. DESCRIPTION: The equipment shall be installed in accordance with Drawings.
1. Products and Quantities:
    a. Equipment Rack: - As specified.
    b. Fiber Interconnect: Panduit FRME24 rack mount fiber optic enclosure or equal. Supply and install as many as necessary to service all fiber strands entering the MDF.
    c. Modular Patch Panels: Panduit angled patch panel or equal: 48-port patch panel wired Category 6A Patch Panel. One port for each workstation served from the MDF with a minimum of 12 spare ports are required. Provide CAT6A angled patch panel for wireless CAT6A ports. If the number of workstation cables, plus required spare count 12 is greater than 48, then a second 48-port patch panel is required. Supply and install as many patch panels in the MDF as necessary to service all workstation cables plus the required spare count. Provide separate CAT 6A patch panels for CAT 6A cables serving wireless access point outlets. Labeling of patch panels shall be Red for voice/data and green for wireless.
    d. Patch Cables: Panduit UTPSPXX-** or equal where XX is the length in feet and ** is the color. The length shall vary between 3 ft. and 25 ft. and shall be determined by the owner. Colors shall also be determined by the owner. A minimum of five different color patch cables shall be carried for different systems.
        1) Cable Color configuration:
            a) - Green - Wireless
            b) - Black - Security/Card Access
            c) - Blue - VoIP
            d) - Blue - Data

e. Data Port Labeling Standard
   1) <Closet>-<Patch Panel>-<Cable Purpose><Patch Panel Port Number> For Example: 3330-B-D43, This signifies that IDF Room 3330 Panel B on Data Patch Panel port 43

2. Required Accessories and Quantities:
   a. Adapter Panels: Panduit FAP6WEIDSC – 6 Port Duplex Multimode SC Adapter Panels.
   b. Fiber Jumpers: Panduit F6D3-3M3Y, 3 meter and 5 meter, Duplex, 50 micron OM3, SC to LC Fiber and ST to LC Fiber Jumper or equal.
   c. Cable Management: Panduit WMPH2E Front/Rear cable manager or Panduit WMPLS Low Profile Cable Manager or equal.
   d. Cable Management Rings and Strain Relief: Panduit WMBV1 21 in. x5 in. Vertical Manager Ring, Panduit WMBV2 2 in. x5 in. Vertical Manager Ring and/or Panduit WMSRC1 or WMSRC2 strain relief clips. Provide and install sufficient quantities to conform to the attached Drawings.
3. Equal manufacturers:
   a. Hubble
   b. Ortronics
   c. Commscope
   d. Or equal

B. INSTALLATION: Installation shall be conducted in accordance with manufacturer's recommendations, industry standards, and this specification. Installation includes complete assembly and mounting of the fiber interconnect equipment, dressing the fiber and copper cables, complete assembly and mounting of the equipment rack, and mounting of the wiring blocks. Equipment shall be mounted in accordance with attached Drawings.

2.9 INTERMEDIATE DISTRIBUTION FACILITIES

A. DESCRIPTION: The equipment shall be installed in accordance with Drawings.
1. Products and Quantities:
   a. Equipment Rack: - As specified.
   b. Fiber Interconnect: Panduit FRME24 rack mount fiber optic enclosure or equal. Supply and install as many as necessary to service all fiber strands entering the IDF.
   c. Modular Patch Panels: Panduit CPPLA48WBLY or equal: 48-port patch panel wired Category 6A Patch Panel. One port for each workstation served from the IDF with a minimum of 12 spare ports are required. Provide CAT6A angled patch panel for wireless CAT6A ports. If the number of workstation cables, plus required spare count 12 is greater than 48, then a second 48-port patch panel is required. Supply and install as many patch panels in the IDF as necessary to service all workstation cables plus the required spare count. Provide separate CAT 6A patch panels for CAT 6A cables serving wireless access point outlets. . Labeling of patch panels shall be Red for voice/data and green for wireless.

d. Patch Cables: Panduit UTPSPXX-** or equal where XX is the length in feet and ** is the color. The length shall vary between 3 ft. and 25 ft. and shall be determined by the owner. Colors shall also be determined by the owner. A minimum of five different color patch cables shall be carried for different systems.
   1) Cable Color configuration:
      a) - Green - Wireless
      b) - Black - Security/Card Access
      c) - Blue - VoIP
      d) - Blue - Data

e. Data Port Labeling Standard
   1) <Closet>-<Patch Panel>-<Cable Purpose><Patch Panel Port Number> For Example: 3330-B-D43, This signifies that IDF Room 3330 Panel B on Data Patch Panel port 43

2. Required Accessories and Quantities:
   a. Adapter Panels: Panduit FAP6WEIDSC – 6 Port Duplex Multimode SC Adapter Panels.
   b. Fiber Jumpers: Panduit F6D3-3M3Y, 3 meter and 5 meter, Duplex, 50 micron OM3, SC to LC Fiber and ST to LC Fiber Jumper or equal.
   c. Cable Management: Panduit WMPH2E Front/Rear cable manager or Panduit WMPLS Low Profile Cable Manager or equal.
   d. Cable Management Rings and Strain Relief: Panduit WMBV1 21 in. x5 in. Vertical Manager Ring, Panduit WMBV2 2 in. x5 in. Vertical Manager Ring and/or Panduit WMSRC1 or WMSRC2 strain relief clips. Provide and install sufficient quantities to conform to the attached Drawings.

3. Equal manufacturers:
   a. Hubble
   b. Ortronics
   c. Commscope
   d. Or equal

B. INSTALLATION: Installation shall be conducted in accordance with manufacturer's recommendations, industry standards, and this specification. Installation includes complete assembly and mounting of the fiber interconnect equipment, dressing the fiber and copper cables, complete assembly and mounting of the equipment rack, and mounting of the wiring blocks. Equipment shall be mounted in accordance with Drawings.

2.10 TESTING AND DOCUMENTATION

A. Testing Agency: Engage a qualified testing agency to perform tests and inspections.

B. Perform tests and inspections.

C. Tests and Inspections:
   1. Visually inspect UTP jacket materials for NRTL certification markings. Inspect cabling terminations in communications equipment rooms for compliance with color-coding for pin assignments, and inspect cabling connections for compliance with TIA/EIA-568-B.1.

2. Visually confirm Category 5e marking of outlets, cover plates, outlet/connectors, and patch panels.
3. Visually inspect cable placement, cable termination, grounding and bonding, equipment and patch cords, and labeling of all components.
4. Test UTP copper cabling for DC loop resistance, shorts, opens, intermittent faults, and polarity between conductors. Test operation of shorting bars in connection blocks. Test cables after termination but not cross-connection.
    a. Provide test instruments that meet or exceed applicable requirements in TIA/EIA-568-B.2. Perform tests with a tester that complies with performance requirements in "Test Instruments (Normative)" Annex, complying with measurement accuracy specified in "Measurement Accuracy (Informative)" Annex. Use only test cords and adapters that are qualified by test equipment manufacturer for channel or link test configuration.
5. Multi-pair Voice Riser Tests:
    a. Test each pair of multi-pair voice riser cables for proper polarity; no reversals; no transpositions; continuity; no shorts; no AC voltages; no DC voltages; no opens; and proper numbering at each termination.
    b. Bring cables and/or pairs not meeting the requirements of the standard into full compliance, at no additional cost to the Owner.
    c. Document cable testing in accordance with Submittals Article. Provide a table of test results in a 3-ring binder submitted with the as-built Drawings.
6. Category 6A Data, and Voice UTP Cable Testing:
    a. Test voice and data jack in each Outlet for Category 6A ANSI/TIA/EIA 568B series compliance, using a Certified Level III testing instrument. Tests shall verify both the integrity of all conductors and correctness of the termination sequence. Tests shall also include length, mutual capacitance, characteristic impedance, attenuation and near-end and far-end crosstalk. Testing shall be performed between modular jacks at the Outlets and the modular jacks at the patch panel field.
    b. The Communication Systems Installer shall bring cables and/or pairs not meeting the requirements of the standard into full compliance, at no additional cost to the Owner.
    c. Document cable testing in accordance with Submittals Article. Provide a table of test results in a 3-ring binder submitted with the as-built Drawings.
7. Fiber Optic Cable Testing:
    a. Test all fibers in the completed end-to-end system. Testing shall consist of a bi-directional end to end OTDR trace, or a bi-directional end to end power meter test performed per ANSI/TIA/EIA 455 53A. The system loss measurement shall be provided at 850 and 1310 nanometers.
    b. Pre-installation cable testing: Test all fiber optic cable prior to the installation of the cable. Assume all liability for the replacement of the cable should it be found defective after the installation.
    c. Loss Budget: Fiber links shall have a Maximum Loss of:
    d. Maximum Loss = (allowable loss per km) (km of fiber in link) + (.4dB)(number of connectors) Note: A mated connector-to-connector interface is defined as a Single connector.

e. Loss numbers for the installed link shall be calculated by taking the sum of the bi-directional measurements and dividing that sum by two. Any link not meeting the requirements of the Maximum Loss shall be brought into compliance at no additional charge to the Owner.

f. Prepare a certification report listing the test results and both the calculated and measure loss for each fiber. Submit this report with the test results as called for in the Submittals Article.

g. Bring cables and/or strands not meeting the requirements of the standard into full compliance.

h. Test data shall reference wing and room number locations.

D. Final Verification Tests: Perform verification tests for UTP systems after the complete communications cabling and workstation outlet/connectors are installed.

1. Voice Tests: These tests assume that dial tone service has been installed. Connect to the network interface device at the demarcation point. Go off-hook and listen and receive a dial tone. If a test number is available, make and receive a local, long distance, and digital subscription line telephone call.

E. Document data for each measurement. Print data for submittals in a summary report that is formatted similar to Table 10.1 in BICSI TDMM, or transferred from the instrument to the computer, saved as text files, and printed and submitted.

F. Remove and replace cabling where test results indicate that they do not comply with specified requirements.

G. End-to-end cabling will be considered defective if it does not pass tests and inspections.

H. Prepare test and inspection reports.

2.11 PUBLIC ADDRESS SYSTEM

A. SUMMARY

1. Section Includes:

a. Public Address and Notification System Equipment

B. DEFINITIONS

1. Channels: Separate parallel signal paths, from sources to loudspeakers or loudspeaker zones, with separate amplification and switching that permit selection between paths for speaker alternative program signals.
2. VU: Volume unit.
3. Zone: Separate group of loudspeakers and associated supply wiring that may be arranged for selective switching between different channels.

C. PERFORMANCE REQUIREMENTS

1. Delegated Design: Design supports and seismic restraints for control consoles, equipment cabinets and racks, and components, including comprehensive engineering analysis by a qualified professional engineer, using performance requirements and design criteria indicated.
2. Seismic Performance: Provide supports and seismic restraints for control consoles, equipment cabinets and racks, and components that withstand the effects of earthquake motions determined according to SEI/ASCE 7.
3. The term "withstand" means "the unit will remain in place without separation of any parts from the device when subjected to the seismic forces specified and the unit will be fully operational after the seismic event."

D. SUBMITTALS

1. Product Data: For each type of product indicated.
2. Shop Drawings: For supports and seismic restraints for control consoles, equipment cabinets and racks, and components. Include plans, elevations, sections, details, and attachments to other work.
3. Detail equipment assemblies and indicate dimensions, weights, required clearances, method of field assembly, components, and location and size of each field connection.
4. Console layouts.
5. Control panels.
6. Rack arrangements.
7. Calculations: For sizing backup battery.
8. Wiring Diagrams: For power, signal, and control wiring.
9. Identify terminals to facilitate installation, operation, and maintenance.
10. Single-line diagram showing interconnection of components.
11. Cabling diagram showing cable routing.
12. Delegated-Design Submittal: For supports and seismic restraints for control consoles, equipment cabinets and racks, and components indicated to comply with performance requirements and design criteria, including analysis data signed and sealed by the qualified professional engineer responsible for their preparation.
13. Detail fabrication and assembly of supports and seismic restraints for control consoles, equipment cabinets and racks, and components.
14. Coordination Drawings: Reflected ceiling plans, drawn to scale, on which ceiling-mounted items including lighting fixtures, diffusers, grilles, speakers, sprinklers, access panels, and special moldings are shown and coordinated with each other, using input from installers of the items involved.
15. Qualification Data: For qualified Installer and testing agency.
16. Seismic Qualification Certificates: For control consoles, equipment cabinets and racks, accessories, and components, from manufacturer.
17. Basis for Certification: Indicate whether withstand certification is based on actual test of assembled components or on calculation.

18. Dimensioned Outline Drawings of Equipment Unit: Identify center of gravity and locate and describe mounting and anchorage provisions.
19. Detailed description of equipment anchorage devices on which the certification is based and their installation requirements.
20. Field quality-control reports.
21. Operation and Maintenance Data: For public address and mass notification systems to include in emergency, operation, and maintenance manuals.

E. QUALITY ASSURANCE

1. Installer Qualifications: Installer must be or use a qualified Systems Integrator who is a manufacturer's authorized representative and who has manufacturer certified staff to oversee the installation, testing and commissioning of the units required for this project. Staff must be currently certified at the time of bid.
2. Testing Agency Qualifications: Qualified agency, with the experience and capability to conduct testing indicated.
3. Testing Agency's Field Supervisor: Currently certified by NICET at Level III to supervise on-site testing.
4. Source Limitations: Obtain public address and mass notification systems from single source from single manufacturer.
5. Electrical Components, Devices, and Accessories: Listed and labeled as defined in NFPA 70, by a qualified testing agency, and marked for intended location and application.
6. Comply with NFPA 70.

F. COORDINATION

1. Coordinate layout and installation of system components and suspension system with other construction that penetrates ceilings or is supported by them, including light fixtures, HVAC equipment, fire-suppression system, and partition assemblies.

G. EXTRA MATERIALS

1. Furnish extra materials that match products installed and that are packaged with protective covering for storage and identified with labels describing contents.
   a. Admin phone: One.
   b. Ceiling Page Speakers: Four
   c. Ceiling Intercom Speaker: Four
   d. Exterior wall speakers: Two

H. WARRANTY

1. On-going system expansion, service and support shall be available from multiple factory certified vendors. Include with the public address and notification system package the recommended service agreement for phase 1 and phase 2 of the project. Provide recommended service agreement pricing at the time of bid complete with manufacturers suggested inventory and pricing for system parts and technical support labor for post phase 2.

2. Provide written warranty, signed by the manufacturer and installer, agreeing to repair or replace at no cost to the Owner, equipment which is defective either in material or workmanship. Warranty Period: one year from the date of Substantial Completion of the entire project, equipment installed in phase one shall have extended warranties to equal one year after substantial completion of the entire project. Refer to phasing specifications for project schedule and phases.

I. PRODUCTS

1. MANUFACTURERS

a. Manufacturers: Subject to compliance with requirements, provide products by one of the three or equal:

1) Valcom 6025 Class Connect IP upon which this specification is based – any other product listed here and submitted must be substantially equal in performance to that which is specified.
2) TOA Electronics IP
3) Informacast Singlewire Advanced with On Site Professional Services

J. FUNCTIONAL DESCRIPTION OF SYSTEM

1. System Functions: Provide the following Application Server system functions, components and capabilities:

a. IP end points. Browser based application server located in MDF. Application server shall include the following features:
b. Unlimited bell schedule
c. Unlimited time events
d. Emergency tones
e. Auto Volume Increase for Emergency Pages
f. Programmable Pre/Post Page Delays
g. Pre-Recorded Audio Messages and Tones
h. Door Entry Control
i. Energy Management Control
j. Radio Interoperability Capability
k. Calendar Based Scheduling
l. Initiate Messages with Customized GUI
m. Import WAV and JPEG files
n. Overrides- Multiple Levels
o. Quick Launch Mode for Emergency Voice Messaging
p. Volume Control Per Event
q. System Back-up and Restore
r. Permission Based Rights
s. Managed by District or local school
t. Redundant High Availability Mode
u. Text to Speech Capability
v. Ability to Receive CAP (Common Alert Protocol)

w. Messages for Emergency Notification

x. Built in Power Pack

2. The above feature set shall be included.
3. Two-way intercom communications between all locations equipped with Control Console and/or telephone system handset, and all locations equipped with a public address system speaker. Integration between the owner furnished Cisco Phone System/Cisco Call Manager shall be included.
4. A hardware server with web based applications shall be included.
5. Include an HD rackmount console equal to Middle Atlantic RM-KB-LCD with 17" LCD monitor, keyboard and touchpad.
6. Main Distribution Frame Room shall include an FXS Gateway equal to Valcom VE8014 for integration with the Cisco Phone system. A 4 port unit with provide DTMF access of channel dial codes and groups.
7. Each MDF and IDF shall also include a minimum of one each Valcom VE8004AR 4 port audio gateway with VP-6124 power supply and VP-9202 shelf. VE8004AR shall include an audio output on each port which shall, in turn, feed the self-amplified speakers in the respective area.
8. Connect classroom intercom speakers back to respective MDF/IDF closets using standard CAT-6 wiring. Each speaker will incorporate PoE connection. Include licenses for each speaker as necessary per manufacturer's requirements based on system supplied.
9. User capability to change system programming for all paging functions, class tone functions, and clock functions – both master and slave. Provide the owner with the required training, documentation, and software to accomplish these functions.
10. Rack mount the main equipment in the MDF within tel/data furnished rack under separate section. Provide remote system programming capability of Public Address and Master Clock features by web based software. Attending to the main equipment in the MDF for normal day-to-day operation of the system is not a necessary requirement. Systems requiring regular adjustment will be rejected.
11. User capability to selectively connect any IP zone to any available signal channel.
12. User capability to selectively control sound level of speakers.
13. "All-call" feature that connects the all-call sound signal simultaneously to all zones regardless of zone.
14. Phones shall be able to page any IP connected speaker or module. They shall also be able to have intercom communication with any classroom containing an IP speaker.
15. Administrative Control Console for facilitating all Public Address System announcements and programming, to include but not be limited to: Emergency all-call; paging zone and number assignments; call-in priority levels with tone characteristics; Master Clock event and tone signaling; monitor and reporting on call-in line faults; and manually distribute unique tones to all zones and speakers in the system.

16. Cabling, appropriate adapters and connection to a local building digital VoIP System (by Owner), allowing any telephone handset that is part of the telephone system to page and conduct hands free open voice communication with any speaker in the system; the Control Console; or any other classroom telephone. Connection to the local phone system shall not diminish or restrict any of the capabilities of local telephone system. Public Address System interfaces shall allow any programmed telephone to perform but not be limited to the following intercommunication system functions: all-call, zone call, intercom call to classroom speakers, distribute class change signals.
17. User programmable zone paging to all classroom and office speakers using Control Console or telephone. Public address zones shall be software programmable to include 2, 3, 4 digit numbers or a letter and a 3-digit number, or any combination. Zone paging shall be independent of time and program zones and shall provide easy access to groups of zones or all-zone pages.
18. Distribution of general announcements over school loudspeakers using a Control Console, or telephone handset, on an All-Call basis, pre-selected zone basis, or multiple-zone basis to any of eight paging zones. Speaker assignments to any of eight zones shall be user-programmable from the Control Console.
19. Distribution of emergency paging announcements over school loudspeakers using a Public Address Control Console, or telephone handset. Emergency announcements shall have the highest priority over other system functions.
20. Ability to designate individual room station within the system as a fixed zone by the simple entering of a single keystroke at the Control Console during a page selection.
21. A preset shall be provided to mute all local sound systems by contact closure allowing the Public Address system to override local sound system programs. Microphone shall transmit to all rooms or specific speakers' zones as programmed in the system software.
22. The capability of multiple open voice intercom paths. Intercom paths shall be global.
23. Automatic gain control of intercom speech to assure constant speech level.
24. Automatic sounding of a warning tone over any loudspeaker selected for two-way communications to alert the classroom teacher to an incoming announcement.
25. A minimum of four channels for intercom communications or audio program distribution.
26. Emergency Calls that can be initiated from a single call key programmed at the classroom telephone.
27. The ability to monitor the school building either on or off the premises from a single telephone.
28. Page by zone shall be software controlled and zones shall be as indicated on plans. At a minimum, incorporate the following individual zones:
29. Hallways/common office areas, conference rooms/bathrooms.
    a. Dining Commons
    b. Gymnasium
    c. Auditorium

d. Outside Speakers

30. Include a minimum of 4 zones of paging from each IDF location. Wiring to speakers in each area of the building shall generally terminate back to the respective MDF or IDF.
31. Audio zones that are different than paging and time zones. Audio source equipment shall have the ability to be located remotely from the main system control electronics, and shall have the ability to distribute two channels of audio simultaneously if so desired.
32. System shall perform diagnostics, or logging transactions either on or off premises.
33. The ability to interface to the power supplies of door strikes (provided by Door Hardware), to allow remote control of door strike through the paging system. The ability to control at minimum the exterior doors with Door Signally (DS) devices is required.
34. Time Signal tones of an integrated Master Clock System to be distributed throughout zone selected for time signaling over programmed loudspeakers on a manual of automatic basis.
35. Powered speakers with power supplies shall be used for common areas, conference rooms, bathrooms and general paging areas such as hallways and gym/caf/dining/auditorium/outside speakers.
36. Cabling that is specified by the manufacture, which provides shielding of conductors so that the Public Address System does not interfere with the Telephone Systems and Telephone System cabling.
37. Produce a program-signal tone that is amplified and sounded over all speakers, overriding signals currently being distributed.
38. Reproduce high-quality sound that is free of noise and distortion at all loudspeakers at all times during equipment operation including standby mode with inputs off; output free of non-uniform coverage of amplified sound.
39. Provide integration with local sound systems in gym/caf/auditorium/music classrooms to mute the respective system during an announcement to that specific zone.
40. Provide integration with security system to receive an input and either distribute a pre-recorded message or a specific tone. The message or tone shall be coordinated with the owner prior to programming.

K. GENERAL EQUIPMENT AND MATERIAL REQUIREMENTS

1. Compatibility of Components: Coordinate component features to form an integrated system. Match components and interconnections for optimum performance of specified functions.
2. Equipment: Comply with UL 813. Equipment shall be modular, using solid-state components, and fully rated for continuous duty unless otherwise indicated. Select equipment for normal operation on input power usually supplied at 110 to 130 V, 60 Hz.
3. Equipment Mounting: Where rack, cabinet, or console mounting is indicated, equipment shall be designed to mount in a 19-inch housing complying with TIA/EIA-310-D.
4. Weather-Resistant Equipment: Listed and labeled by a qualified testing agency for duty outdoors or in damp locations.

L. POWER SUPPLIES

1. Shall be sized to power speakers in respective area with spare capacity on each circuit.

M. Output Power: 24VDC output/rack mount.

1. Equal to Valcom VP-6124 with VP-9202 rack mount shelf

N. AUDIO GATEWAYS

1. Mounting: rack/shelf mount
2. Equal to Valcom VE8004AR
3. Each port can provide either an audio output port or an audio input port. These shall be configured as outputs.
4. Audio output shall be adjustable to feed powered speakers.
5. Audio gateway channels may be directly accessed via Session Initiation Protocol (SIP).
6. Furnish one per IDF location minimum.

O. HANDSET

1. Include one VEADP audio handset console with LCD as an emergency backup. Locate this in the MDF.

P. SPEAKERS

1. IP Intercom Speaker:
   a. Typical for all classrooms
   b. Equal to Valcom VE4060A
   c. Size: 8 inches with RJ-45 connector
   d. 802.3af compliant
   e. High Efficiency Class D amplifier
   f. Levels to be set via software
   g. Include Valcom V-9916M speaker bridge and backbox combination with each speaker
2. Common Area Speakers:
   a. Amplified Ceiling Speaker equal to Valcom V-1020C
   b. Size: 8 inches
   c. Includes pop on or pop off volume control knob
   d. Voice Coil Impedance – 45 ohm
   e. Output rating – 96db @4’
   f. Signal to noise ratio -70
   g. Power requirement – 50ma @ -24VDC
   h. Include Valcom V-9916M speaker bridge and backbox combination with each speaker
3. Exterior Flush Loudspeakers:
   a. Equal to Valcom V-1080

b. Weatherproof design
c. Stainless Steel hardware
d. Recess mounted using Valcom V-9805 enclosure with faceplate
e. Built in volume control
f. -4 to 131 degrees F
g. 108db @ 4’
h. 200ma 24VDC
i. 400Hz to 10KHz

4. Wall Mounted Flush Loudspeakers
   a. Equal to Valcom V-9880 one way page speaker with V-9809 enclosure and faceplate
   b. Steel Mesh baffle
   c. Tamper resistant faceplate
   d. Heavy Guage Steel Construction
   e. Flexhorn design – used for loud areas as indicated on plans (i.e. gym, automotive, mechanical spaces).
   f. 24VDC powered speaker
5. Pendant Loudspeaker for Cafeteria and Promenade
   a. The pendant loudspeaker shall be a JBL Control 65P/T or equal is a compact full-range, two-way pendant-type loudspeaker that provides superb sound reproduction and very consistent, wide coverage for rooms with open architecture ceilings and other locations where a pendant form factor is desired.
   b. JBL’s patent-pending Radiation Boundary Integrator® (RBI) technology, adapted from the groundbreaking VERTEC™ Series of line array loudspeakers, delivers consistent coverage of the listening area. Combining a large 200 mm (8 in) diameter waveguide with low-frequency projection apertures, the two coaxially-mounted drivers provide a seamless integration of coverage, resulting in extremely even pattern control and coverage where all listeners hear a consistent, high-fidelity sound quality. The wide 120° coverage pattern allows for the use of fewer speakers, reducing the cost of the installed system without sacrificing performance.
   c. Excellent sound quality coupled with stylish design and easy installation makes the Control 65P/T ideal for a wide variety of applications including retail, restaurants, hotels, casinos, fitness centers, convention centers, exhibit spaces, conference rooms, atriums, museums, transit centers and other open-ceiling applications.
   d. The Control 65P/T includes a single-point mounting system for easy and secure suspension in open-ceiling applications. Two complete hanging cable systems are included, providing both main and safety suspension cables. Include are extra-long 4.5 m (15 foot) high tensile galvanized steel wire rope having spring clips for the loudspeaker end of the cable and UL listed cable fasteners for infinitely adjustable suspension height.

e. The system's 130 mm (5¼ in) low-frequency driver features a polypropylene-coated cone and 25 mm (1 in) copper voice coil with vented fiberglass resin coil-former for high power handling and improved long-term reliability. The coaxially-mounted 20 mm (¾ in) textile softdome high frequency driver features internal damping for smooth extended response, along with an aluminum voice coil former and neodymium magnet assembly with ferro-fluid cooling, for high-fidelity sound quality with enhanced long-term sound level capability.

f. The Control 65P/T contains a high-quality 60 Watt multi-tap transformer for use on 70V/100V distributed loudspeaker lines, and is switchable for 8-ohm voice-coil direct operation.

g. Euro-style clip-in connectors allow for easy wiring. For protected outdoor applications, rubber boots are included to cover the input connectors, and an optional terminal cover is available for harsher locations.

h. Provide IP interface and amplification as required

6. Pendant Loudspeaker for Auditorium

a. Loudspeaker shall be JBL AWC62 or equal compact, coaxial-driver, 2-way, highly weather-resistant full-range loudspeaker system which is ideal for speech and music-fill in a wide variety of applications, including sports facilities, racetracks, stadiums, fairgrounds, rodeos, skating rinks, themed entertainment venues, cruise ships, water parks, outdoor background music/ paging systems, swimming pools, and a wide variety of other outdoor or indoor venue types.

b. The AWC62 is comprised of a high-power coaxial 165 mm (6.5 in) low frequency driver and 25 mm (1 in) high frequency compression driver. The co-axial design utilizes a unique tapered pole-piece design and transitions to the cone of the low frequency driver as a large diameter pattern control horn for the high frequencies, both eliminating high-frequency beaming which is common among this category of speaker and extending pattern control to the lowest possible frequencies. The result is a coaxial speaker with wide, extremely consistent 110° coverage on a broadband basis.

c. Component features include a Kevlar-reinforced low frequency cone for reliability, well-damped surround for smooth frequency response, high temperature voice coil and a reduced distortion design through saturated-gap magnet geometry.

d. The paintable enclosure is constructed of thick, ABS plus fiberglass and is heavily braced to maximize low-frequency performance. The corrosion-resistant zinc-rich extra-thick powder coated steel grille is backed with open cell foam and high thread-count mesh, providing excellent protection in the harshest environments.

e. The system is rated IP-56, per IEC529 when installed at minimum 5° down-tilt. The system is equipped with a 120W 70V/100V multi-tap transformer. Connection is made via outdoor-rated terminals in a recessed terminal cup. A protective terminal compartment cover is included, along with gland nut, which forms a water-tight seal with round-jacketed cable having outside diameter between 4 mm (0.16 in) and 9 mm (0.36 in).

f. A heavy-duty weather-capable zinc-rich, thick powder coated U-type bracket is included.

g. Provide IP interface and amplification as required.

7. SPEAKER VOLUME CONTROL
   a. Equal to Valcom V-2992-W white wall mounted speaker volume control
   b. Controls volume of up to 150 speakers
   c. Embossed 0 to 10 numbers
   d. Single gang mounting

8. CONDUCTORS AND CABLES
   a. Jacketed, twisted pair and twisted multipair, untinned solid copper.
      1) Insulation for Wire in Conduit: Thermoplastic, not less than 1/32 inch thick.
      2) Plenum Cable: Listed and labeled for plenum installation.

9. RACEWAYS
   a. Conduit and Boxes: Comply with Division 26 Section "Raceway and Boxes for Electrical Systems." Do not use flexible metal conduit.
   b. Provide outlet boxes not less than 2 inches wide, 3 inches high, and 2-1/2 inches deep.

10. Submittals
    a. Specification Sheets shall be submitted on all items including cable types.
    b. Submit diagram of system control cabinet showing relative position of all major components.
    c. Submittal shall contain wiring diagrams showing typical connections for all equipment and one line diagrams showing system signal flow. This diagram shall also be laminated and installed inside the front lockable door of the main equipment cabinet.
    d. Submittals shall include narrative description of system functions and operation. Sections of this narrative description should detail basic operational functions such as, “turning on the system,” “basic microphone technique,” “multiple microphone techniques,” “operation of a graphic equalizer”.
    e. Final approval of the any alternate product/system shall be determined at the time of job completion. Failure to provide the "precise functional equivalent" may result in the removal of the alternate system at the Technology Subcontractor's expense.
    f. Supervise on-site testing.

11. Unspecified Equipment and Material.
    a. Provide any item of equipment or material not specifically addressed on the Drawings or in this Document and required to provide a complete and functional installation in a level of quality consistent with other specified items. Includes Lockable Equipment Cabinet sized for up to 25% future equipment expansion.

12. Equipment Racks
    a. All equipment racks shall provide 44 spaces (77”) minimum for mounted system equipment.

b. All equipment racks shall be multi-rack format ("gangable") style, bolted together, and open cavity.

c. All equipment racks will be provided with lockable rear doors.

d. Equipment rack(s) shall be located in climate-controlled areas/rooms as shown on drawings.

e. All head-end, distribution, and source equipment, including data and power, shall be located in racks configured as approved by the Engineer.

f. Rack mounted equipment shall be accessible from front and rear.

g. All unused rack spaces will be covered with appropriate blank/vent panels.

13. Network Swiches:

a. Provide all network switches required for IP paging system operation:

1) Provide all required network switches. Network switches are proprietary

a) IDF rooms shall utilize HP/Aruba 2920 , model# J9729A

b) MDF room shall utilize HP/Aruba 5406R model# JL003A with 2 -1100 Watt power supplies (Model J9829A)

2.12 WIRELESS MASTER CLOCK SYSTEM

A. DEFINITIONS

1. NIST: The National Institute of Science and Technology.
2. PC: Personal computer.
3. UTC: Universal time coordinated. The precisely measured time at zero degrees' longitude; a worldwide standard for time synchronization.

B. PERFORMANCE REQUIREMENTS

1. Seismic Performance: Master clock and housing shall withstand the effects of earthquake motions determined according to ASCE/SEI 7.

a. The term "withstand" means "the unit will remain in place without separation of any parts from the device when subjected to the seismic forces specified and the unit will be fully operational after the seismic event."

C. SUBMITTALS

1. Product Data: For each type of product indicated. Include construction details, material descriptions, dimensions of individual components and profiles, and finishes (including available colors) for each product indicated and describe features and operating sequences, both automatic and manual, for the following:

a. Master unit.

b. Indicating clocks.

c. Signal equipment.

d. Equipment enclosures and back boxes.

e. Accessory components.

2. Shop Drawings: For clock systems. Include plans, elevations, sections, details, and attachments to other work.
3. Samples for Initial Selection:
   a. Manufacturer's color photographs or color chips showing the full range of colors available for clocks, signal equipment, and control panels.
4. Delegated-Design Submittal: For the master clock and housing indicated to comply with performance requirements and design criteria, including analysis data signed and sealed by the qualified professional engineer responsible for their preparation.
   a. Detail fabrication and assembly of the master clock and housing.
   b. Design Calculations: Calculate requirements for selecting seismic restraints.
5. Field quality-control reports.
6. Operation and Maintenance Data: For clock and program control to include in emergency, operation, and maintenance manuals.

D. QUALITY ASSURANCE

1. Electrical Components, Devices, and Accessories: Listed and labeled as defined in NFPA 70, by a qualified testing agency, and marked for intended location and application.
2. Comply with NFPA 70.S

E. MASTER AND SECONDARY CLOCK SYSTEM

1. Manufacturers: Subject to compliance with requirements, provide products by one of the following:
2. Basis-of-Design Product: Basis of design is Primex.
   a. Primex
   b. American Time
   c. Sapling, Inc.
   d. Simplex Grinnell
   e. Or equal.
3. Master Clock System
   a. Time programming shall be accomplished by way of a microprocessor-based and user-programmable master control system integrated within the Integrated Sound and System. The unit will further permit programming, diagnostics, and activity logging through connection to an external computer. The system shall be provided with a GPS antenna mounted to the roof as shown on the riser diagram with the necessary hardware-software to interface to the integrated communications system.
   b. Correction to the second, the master time controller shall provide all secondary clocks correction to the second.
   c. The master time controller shall provide the following functions:
      1) Wireless control of the slave 12 in. and 16 in. clocks located throughout the building
      2) Wireless repeaters shall be provided in the MDF and IDF on each floor linked via a RS485 loop between the master clock and each

repeater as necessary.

3) Capacity for storing 900 events and up to 100 Holidays in nonvolatile memory.
4) Ability to review, edit and delete events
5) Review events from any entered time of day
6) Events shall be programmable to any or all of (8) zone circuits
7) Selection of any of (8) schedules to allow flexibility due to seasonal changes or special events
8) Fully automatic Holiday program execution.
9) User programmable Automatic Daylight Savings Time Change
10) Separate bell duration for each zone circuit
11) Latched operation of zones to control lighting or other devices
12) User-programmable custom slave clock correction. Output relays rated at five amperes shall be provided on all zone circuits.

d. The secondary clock shall be a wireless clock 12 or 16 inch depending on location. All clocks shall be square in shape. The clock will be capable of receiving a signal from multiple clocks. The clock shall receive and transmit with 915–928 MHz frequency–hopping technology. The clock is to be capable of transmitting the time simultaneously without interfering with each other. The clocks shall include automatic calibration, as well as a diagnostic function that allows the user to view the quality of the signal, the last time the clock received a correction signal, a gearbox test and a comprehensive analysis of the entire clock. The clock shall have a maximum correction time of five minutes. It shall be designed to be used with the Repeater one for each of the two floors located in the data MDF and IDF, which can be regulated via wireless communication protocol. Upon receipt of the wireless signal, the clock will immediately self–correct. The clock shall have a semi–flush smooth surface ABS case. The dial is to be made of durable polystyrene material. The crystal is to be shatterproof, side molded polycarbonate. Glass and visible molding marks are unacceptable. The clock shall have black hour and minute hands as well as a red second hand.

e. Clocks in the gymnasium shall be 16 in. and provided with wire guards.

f. Digital LCD Multi-Line Administrative telephones integration, the time on the Digital LCD Multi-Line Administration telephones shall be automatically and continually synchronized with the schools Master Clock System which supports all the school's secondary clocks and class change tones. System that requires the owner to do periodic manual synchronization between the telephone systems clock and the schools Master Clock shall not be acceptable.

g. An outside GPS antenna with 100' cable shall be included so as to furnish a GPS time standard to the building. The electrical contractor shall be responsible for installing this antenna cable.

F. INSTALLATION

1. Mount system components with fastening methods and devices designed to resist the seismic forces indicated in Division 26 Section "Vibration and Seismic Controls for Electrical Systems."

G. IDENTIFICATION

1. Comply with Division 26 Section "Identification for Electrical Systems."

2. Color-code wires, and apply wire and cable marking tape to designate wires and cables so they are uniformly identified and coordinated with wiring diagrams throughout the system.

H. FIELD QUALITY CONTROL

1. Manufacturer's Field Service: Engage a factory-authorized service representative to inspect, test, and adjust components, assemblies, and equipment installation, including connections.
2. Perform tests and inspections.

   a. Manufacturer's Field Service: Engage a factory-authorized service representative to inspect components, assemblies, and equipment installations, including connections, and to assist in testing.
3. Tests and Inspections:

   a. Perform operational-system tests to verify compliance with the Specifications and make adjustments to bring system into compliance. Include operation of all modes of clock correction and all programming and manually programmed signal and relay operating functions.

   b. Verify that units and controls are properly labeled and interconnecting wires and terminals are identified.
4. Clock system will be considered defective if it does not pass tests and inspections.
5. Prepare test and inspection reports.

I. ADJUSTING

1. Program system according to Owner's requirements. Set system so signal devices operate on Owner-required schedules and are activated for durations selected by Owner. Program equipment-control output circuits to suit Owner's operating schedule for equipment controlled.
2. Adjust sound-output level of adjustable signal devices to suit Owner's requirements.
3. Occupancy Adjustments: When requested within 12 months of date of Substantial Completion, provide on-site assistance in adjusting system to suit actual occupied conditions. Provide up to three visits to Project during other-than-normal occupancy hours for this purpose.

J. DEMONSTRATION

1. Engage a factory-authorized service representative to train Owner's maintenance personnel to adjust, operate, and maintain clock-and-program-control system components.

2.13 ELEVATOR TELEPHONE LINE FAULT MONITOR

A. Provide Line Fault Monitor designed for connection across incoming telephone lines on systems using telephone dialers (e.g., 612) or digital communicators (e.g., 678, 678UL-B. 793 or 794) or control/communicators. It will cause a signal to be generated if the telephone line between dialer or communicator and the central station is cut or shorted, or if incoming service is otherwise interrupted. The signal can be in the form of sounding the on-premises protective system's alarm bell (when the system is ON), or the lighting of a trouble indication lamp on an optional accessory tester (such as the 664 for non-UL Listed applications).

B. Monitor shall be mounted within a Listed control unit or other enclosure connect to intrusion alarm system on dedicated zone.

2.14 TWO WAY COMMUNICATIONS CALL BOXES

A. SUMMARY

1. Section Includes: Area of Refuge Base Stations, call boxes and signage

a. The Area of Refuge Base Station is to be located at a central control point on the first floor or as determined by local Authority having jurisdiction. Call Boxes are to be located on all floors above and below the first floor, ideally next to a stairwell emergency exit or elevator landing on each floor.

b. The Area of Refuge Base Station must be capable of handling a minimum of 5 Call Boxes. Visual indicators on the base station allow Rescue personnel to know which Area of Rescue Call Box needs assistance. The Base Station must allow Rescue personnel to speak to all Call Boxes or individual Call Boxes.

c. The Emergency communication hardware shall comply with the Americans with Disabilities Act (ADA). The phone shall have the ability to be programmed with up to 5 emergency phone numbers. Upon activation of the emergency push button, a call will be automatically placed to the Base Station. If no one answers at the Base Station, the Call Box must dial a secondary location outside the building to activate two way off-site person to person voice communications. via landline, cellular device (part # 2100-GSMLC or 2100-CDMALC), or IP (part # 2100-VOIP). Provide all three methods in bid.

B. SUBMITTALS

1. Submit product data sheets. Include operations manuals.

2. Submit wiring diagrams detailing wiring schematics and cabling.

C. MANUFACTURERS

1. Manufacturers: Subject to compliance with requirements, provide products by one of the following: Aiphone is Basis of Design.

a. Rath Area of Refuge

b. Aiphone

c. Or Equal.

D. FUNCTIONAL DESCRIPTION OF SYSTEM

1. Construction
   a. The Area of Refuge Base Station (models 2500) must have a stainless steel or powder coated steel housing, red coil cord emergency Handset, be 120vac powered, and maintain back-up power for 4 hours.
   b. The Area of Refuge Call Boxes (models 2100) must be in full compliance with Americans with Disabilities ACT (ADA). Call Boxes require a hands-free speakerphone with an LED to indicate status of call.
   c. The Area of Refuge Call Boxes must allow the programming in of a specific location message of the Call Box. This allows Rescue personnel to know the location of the activated Call Box.
   d. The Area of Refuge Call Boxes are to be located no higher than 48” above ground level to ensure conformance with the ADA requirements.
   e. The Area of Refuge Call Boxes must have a Braille faceplate located no higher than 48” for front reach and 54” for side reach above ground level to ensure conformance with the ADA requirements.
   f. The Area of Refuge Base Station must provide an audible and visual indicator that a Call Box has been activated.
   g. The area of Refuge 24vac Power Supply model 2500-PWR24U must be capable of supplying power to a minimum of 10 Call Boxes. (does not power Base Station)
2. Mounting
   a. The Area of Refuge Base Station is to be mounted on a wall flush mounted.
   b. Areas of Refuge *Call Boxes* are to be wall flush mounted.
3. Electrical
   a. Call Boxes and Base Station are to be powered by RATH® 24vdc Power Supply part # 2500-PWR24. Base Station to have option of 120vac power.
   b. Wiring from the Base Station to the Call Boxes shall be CI 2 hour fire-rated cable, use RATH® Communication Cable part # RP6600300M. 2 hour fire rated cable is required and shall be provided.
   c. Call Boxes must have built-in battery backup and include a rechargeable battery to maintain backup power for a minimum of 4 hours of talk time. If Call Boxes require protective covers per local municipal codes, use RATH® 2100-XXXSSRC2.
   d. Base Station must have a built-in battery backup and include a rechargeable battery to maintain backup power for a minimum of 4 hours of talk time.
   e. System shall be in compliance with all state and local Electrical Codes.

4. Communications
   a. The Call Boxes shall have an ADA compliant and vandal resistant speakerphone.
   b. The Call Boxes shall be Hands-Free and be a push-button-once to talk system. Once the button has been pushed, the Call Box will call the Base Station. If no answer at the Base Station, it will automatically call preprogrammed emergency numbers. The Call Box must be capable of

being programmed with up to 5 emergency numbers.

c. Call Box shall have Location Message capability. Call Box must have a minimum 18 second recordable message capability, programmable to play 1 or 2 times. Call Box shall notify called party of the location of the call upon being received at the emergency dispatch center.

d. Call Box shall be capable of allowing the called party to replay the Location Message if necessary to ensure an understanding of the caller location.

e. If system is not attended to 24 hours a day, the Call Box must dial a secondary location outside the building to activate two way off-site person to person voice communications.

f. Once call has been made (button pushed), the call can only be terminated by the called party.

g. Call Box must have a red LED that will light up upon push of the button. The light shall be a solid color when the Call Box is activated, and will flash when call has been answered.

h. The Call Box must be capable of being programmed and reprogrammed on-site and remotely.

i. Standard Call Box features:

1) Five number programming.

2) Operating Temperature of between -40˚F to +150˚F (-40˚ to + 65˚ C)

3) Programmable passwords.

4) On-Site or Remote Programmable.

5) EEPROM memory to protect programming.

5. Signage

a. System shall consist of a minimum of one 120/277vac edge light sign (part # 7050 or 7050E), and a “location” and “instruction” sign (part # 7049SS) to clearly indicate location of designated area. A tactile sign (part # 7043/7044 or 7087) with raised letter and Braille shall be located at entrance to area.

6. Monitoring

a. Off-Site monitoring of the system shall be provided by Rath Monitoring.

b. Must be a UL Listed monitoring service provider

c. Minimum 3 year agreement for monitoring of the system.

d. Call Boxes shall dial Rath Monitoring at 800-xxx-xxxx.

7. Graphics

a. Area of Refuge Base Station must include wording identifying the location of each Call Box and light an LED when a particular Call Box has been activated.

b. Call Box wording must include “Emergency Phone”, “International Phone symbol” and raised Braille lettering.

8. Cabling

a. Cabling for two-way communication system shall meet the applicable requirements for pathway survivability. Cabling installation shall consist of one or more of the following:

b. 2 hour fire-rated circuit integrity (CI) cable – RATH® Part # RP6600300M (for a UL Listed option use part # RPP66010002)

c. 2 hour fire-rated cable system

E. STARTUP SERVICE

1. Engage a factory-authorized service representative to perform startup service.

a. Verify that electrical wiring installation complies with manufacturer's submittal and installation requirements.

b. Complete installation and startup checks according to manufacturer's written instructions.

F. ADJUSTING

1. On-Site Assistance: Engage a factory-authorized service representative to provide on-site assistance in adjusting sound levels, resetting transformer taps, and adjusting controls to meet occupancy conditions.

2. Occupancy Adjustments: When requested within 12 months of date of Substantial Completion, provide on-site assistance in adjusting system to suit actual occupied conditions. Provide up to three visits to Project during other-than-normal occupancy hours for this purpose.

G. DEMONSTRATION

1. Engage a factory-authorized service representative to train Owner's maintenance personnel to adjust, operate, and maintain the public address and mass notification systems and equipment.

H. WARRANTY

1. The Base Station and Call Boxes shall be warranted for a period of three years.

PART 3 - EXECUTION

3.1 GENERAL

A. Do not install equipment and materials which have not been reviewed by the Architect. Equipment and materials which are installed without the Architect's review or without complying to comments issued with the review shall be removed from the project when so instructed by the Architect. No payment will be made for unapproved or removal if it is ordered removed. The Installer shall be responsible for any ancillary costs incurred because of its removal and the installation of the correct equipment and materials.

B. Obtain detailed information on installation requirements from the manufacturers of all equipment to be furnished, installed or provided. At the start of construction, check all Contract Documents, including all Drawings and all Sections of the specifications for equipment requiring electrical connections and service and verify electrical characteristics of equipment prior to roughing.

C. Equipment and systems shall not be installed without first coordinating the location and installation of equipment and systems with the General Contractor and all other Trades.

D. Any and all material installed or work performed in violation of above requirements

shall be re-adjusted and corrected by the Installer without charge.

E. Refer to all Drawings associated with the project, prior to the installation or roughing-in of the electrical outlets, conduit and equipment, to determine the exact location of all outlets.

F. After installation, equipment shall be protected to prevent damage during the construction period. Openings in conduits and boxes shall be closed to prevent the entrance of foreign materials.

G. Home runs indicated are not to be combined or reduced without written consent from the Architect.

H. All connections to equipment shall be made as required, and in accordance with the approved submittal and setting drawings.

I. Delivery, Storage and Handling:

1. Deliver, store, protect and handle products in accordance with recommended practices listed in Manufacturer's Installation and Maintenance Manuals.
2. Deliver equipment in individual shipping splits for ease of handling, mount on shipping skids and wrap for protection.
3. Inspect and report concealed damage to carrier within specified time.
4. Store in a clean, dry space. Maintain factory protection or cover with heavy canvas or plastic to keep out dirt, water, construction debris, and traffic. Heat enclosures to prevent condensation. Meet the requirements and recommendations of NFPA 70B and the Manufacturer. Location shall be protected to prevent moisture from entering enclosures and material.
5. Handle in accordance with NEMA and the Manufacturer's recommendations and instructions to avoid damaging equipment, installed devices and finish.
6. The equipment shall be kept upright at all times. When equipment has to be tilted for ease of passage through restricted areas during transportation, the Manufacturer shall be required to brace the equipment suitably to ensure that the tilting does not impair the functional integrity of the equipment.

J. Site Observation:

1. Site observation visits will be performed randomly during the project by the Architect. Reports will be generated noting observations. Deficiencies noted on the site visit reports shall be corrected. All work shall comply with the Contract Documents, applicable Codes, regulations and local Authorities whether or not a particular deficiency has been noted in a site visit report.
2. Be responsible to notify the Architect ten working days prior to closing in work behind walls, raised access floors, ceilings, etc., so that installed work can be observed prior to being concealed.
3. Areas shall stay accessible until deficiencies are corrected and accepted. Notify the Architect when all deficiencies are corrected. Return reports with items indicated as corrected prior to re-observation by the Architect.

K. Project Open House:

1. If the Owner elects to have an open house at the end of the project, provide assistance to the Owner. Cooperate and provide manpower to operate and

demonstrate systems during the open house as requested by the Owner.

3.2 EQUIPMENT RACKS, CABINETS AND BRACKETS

A. Securely mount equipment racks, cabinets and wall mounted relay brackets to the building structure. Proper supports such as 3/8" lag screws and expansion anchors shall be used. Proper quantity of supports shall be utilized. Dry wall screws and other types of supports not specifically approved to support equipment are specifically prohibited. Submit mounting supports for approval before installation.

B. Position racks, cabinets, and wall mounted relay brackets in order to have minimum 3-foot clearance for easy access. Equipment racks, cabinets and relay brackets mounted on or against walls shall have 3-foot clearance in front of deepest component. Free standing equipment racks and cabinets shall have 3-foot clearance in front and rear of deepest components. Provide 3-foot clearance between free standing equipment racks or cabinets and any other obstruction to allow access from front to rear of rack or cabinet for maintenance.

C. The Electrical Contractor shall provide cable tray over each rack and cabinet as required to facilitate a neat and orderly installation of cables and to secure the top of the racks to the structure. Cables shall drop straight down to equipment racks. Cable trays shall be secured at both ends to the structure and connected together as required for a complete contiguous installation. Utilize proper supports to support the cable tray to the building structure as well as the equipment rack and cabinet. Submit mounting supports for approval before installation.

D. Cable Management: All cables shall enter the wiring closet to within the equipment racks and/or brackets. Secure the bundle(s) to the rack strain relief and wire management behind the patch panels and cross connect block panels. Install horizontal and side-mounted vertical cable management panels and brackets for routing and management of patch cables. Maintain EIA/TIA and BICSI standards on bundling, supporting and bend radii.

E. Once the cabling system has been installed and terminated, install all active components and surge protected power strips into the racks, cabinets and wall mounted relay brackets.

F. Surge Protected Outlet Strips: Mount UPS and surge protected outlet strips per Manufacturer's directions. Refer to details on the Drawings for mounting location.

3.3 TERMINATIONS

A. All copper conductors of every cable shall be completely terminated at both ends.

3.4 CABLE PATHWAYS

A. Install cables in pathways provided by the Electrical Subcontractor or required under execution part of this Section.

B. Provide all equipment and cabling for a complete installed operating system. In general, pathways, outlet boxes and grounding are provided by the Electrical Sub-Contractor.

C. All pathways provided under this Section shall comply with fill capacities as per

Code, EIA/TIA 569 and BICSI.

D. Cable bending radius shall not be less than minimum required by EIA/TIA and BICSI.

E. Cabling installed concealed shall be supported from the building structure (e.g. cable trays, J-Hooks, etc.).

F. Cables shall be installed no closer than 12 inches (305mm) to electrical equipment and wiring. When cables are required to cross power wiring, they shall only do so perpendicular to the power wiring. Telecommunications cabling and power wiring shall only cross each other the minimal number of times as required due to building design limitations.

G. Clearances: Clearances between cabling and other building systems as required by EIA/TIA 569 and BICSI shall be maintained throughout the building.

H. All cables shall be installed in a neat and workman-like manner. Cables shall be installed parallel and perpendicular to building elements.

I. Provide expansion fittings and adequate cable slack at all building expansion joints.

J. Fire/smoke seal all conduits, raceways, sleeves, slots, etc. where cables pass from one location to another.

3.5 SEALING OF PENETRATIONS AND OPENINGS

A. Environmental Seals

1. Provide seals on raceways exposed to widely different temperatures, as in refrigerated or cold storage areas. Install seal to prevent circulation of air from warmer to colder sections through the raceway.
2. Provide seals under device plates for outlets on walls between conditioned and non-conditioned spaces.
3. Provide outlet plate gasket seals at all work area outlets on interior and exterior walls.

3.6 SEISMIC SUPPORTS, SUPPLEMENTARY STEEL AND CHANNELS

A. Provide all supports, supplementary steel and channels required for the proper Seismic installation, mounting and support of all work installed under this Section.

B. All supports, supplementary steel and channels shall be furnished, installed and secured with all fittings, support rods and appurtenances required for a complete support or mounting system.

C. Supplementary steel and channels shall be firmly connected to the building construction in a manner approved by the Architect prior to the installation of same. Submit to the Architect, via the General Contractor, the locations proposed for using supplementary steel and channels for the support of equipment, fixtures and raceways. The submittal shall indicate the mounting methods, size and details of the supports, channels and steel; it shall indicate also that weight which the supports, channels and supplementary steel is to carry.

D. The type and size of the supporting channels and supplementary steel shall be of

sufficient strength and size for seismic restraint and to allow only a minimum deflection in conformance with the channel and supplementary steel manufacturer's requirements for loading.

E. All supplementary steel and channels shall be installed in a neat and workmanlike manner parallel to the walls, floor and ceiling construction. All turns shall be made with 90 degrees and 45 degrees' fittings, as required to suit the construction and installation conditions.

F. All supplementary steel, channels, supports, and fittings, shall be Underwriters' Laboratories, Incorporated, approved, be galvanized steel and be manufactured by Steel City, Unistrut, Power-Strut, T. J. Cope, Chalfant or approved equal.

G. Provide supports to meet the required Seismic rating as indicated under "Part One" of this Specification.

H. Provide beam clamps with set screws (C-clamp type).

I. Work under this Section shall be held in place by Seismic rated methods.

J. Supporting from the roof decking will not be acceptable.

K. Provide expansion anchors on masonry units or brick work. Power actuated supports will not be accepted.

L. Provide stainless steel or corrosion resistant supports in corrosive areas on wet or damp areas.

M. Support work from the building structure, independent of suspended ceilings, roof deck or other trades work. Where duct work, pipes, pipe racks, type of building construction materials or structural framing members provide obstruction or difficult support means, hanger rods shall be used in association with horizontal sections of steel support channels, in an approved manner.

N. All work shall be installed in a rigid and satisfactory manner and shall be supported by bar hangers in frame construction or shall be fastened directly with wood screws on wood, bolts with expansion shields on concrete or brick toggle bolts on hollow masonry units, and machine screws or welded threaded studs on metal. Threaded studs of the proper type and holding capacity driven in by a power charge and provided with lock washers and nuts are acceptable for mounting of equipment on solid concrete walls or slabs.

O. Obtain written permission from the General Contractor allowing use of power activated charges. Use only properly trained and licensed operators.

P. Do not use power charge driven supports for any work that is to be hung from a horizontal surface without written permission from the Architect.

Q. Preset inserts of the proper type and holding capacity shall be used in overhead slab construction wherever possible.

R. Provide lateral supports for work to prevent excessive movement during a seismic event using rods, braces or galvanized or stainless steel cables.

S. Pendants, supports or hanging rods longer than 12 inches (300mm) shall be laterally

braced.

T. Where installed in damp, wet and areas requiring wash down, all surface mounted panels, boxes, junction boxes, conduit, etc., shall be supported by spacers to provide a clearance between wall and equipment.

3.7 IDENTIFICATION

A. Identify system components, wiring, and cabling complying with TIA/EIA-606-A. Comply with requirements for identification specified in Section 26 00 00 "Identification for Electrical Systems."

1. Confirm labeling scheme with the Owner prior to final labeling.
2. Color-code cross-connect fields and apply colors to voice and data service backboards, connections, covers, and labels.

B. Using cable management system software specified in Part 2, develop Cabling Administration Drawings for system identification, testing, and management. Use unique, alphanumeric designation for each cable and label cable, jacks, connectors, and terminals to which it connects with same designation. At completion, cable and asset management software shall reflect as-built conditions.

C. Cable Schedule: Install in a prominent location in each equipment room and wiring closet. List incoming and outgoing cables and their designations, origins, and destinations. Protect with rigid frame and clear plastic cover. Furnish an electronic copy of final comprehensive schedules for Project.

D. Cabling Administration Drawings: Show building floor plans with cabling administration-point labeling. Identify labeling convention and show labels for telecommunications closets, backbone pathways and cables, entrance pathways and cables, terminal hardware and positions, horizontal cables, work areas and workstation terminal positions, grounding buses and pathways, and equipment grounding conductors. Follow convention of TIA/EIA-606-A. Furnish electronic record of all drawings, in software and format selected by Owner.

E. Cable and Wire Identification:

1. Label each cable within 4 inches of each termination and tap, where it is accessible in a cabinet or junction or outlet box, and elsewhere as indicated.
2. Each wire connected to building-mounted devices is not required to be numbered at device if color of wire is consistent with associated wire connected and numbered within panel or cabinet.
3. Exposed Cables and Cables in Cable Trays and Wire Troughs: Label each cable at intervals not exceeding 15 feet.
4. Label each terminal strip and screw terminal in each cabinet, rack, or panel.
   a. Individually number wiring conductors connected to terminal strips and identify each cable or wiring group being extended from a panel or cabinet to a building-mounted device with name and number of particular device as shown.
   b. Label each unit and field within distribution racks and frames.
5. Identification within Connector Fields in Equipment Rooms and Wiring Closets: Label each connector and each discrete unit of cable-terminating and

connecting hardware. Where similar jacks and plugs are used for both voice and data communication cabling, use a different color for jacks and plugs of each service.

F. Provide preprinted or computer-printed type labels with printing area and font color that contrasts with cable jacket color but still complies with requirements in TIA/EIA 606-A, for the following:

1. Cable Labels: Use flexible vinyl or polyester that flexes as cables are bent.

3.8 CABLE SUPPORTS

A. Provide strain relief hardware for backbone cables at each floor level as they pass from one floor to the next.

B. Provide hook and loop (Velcro) cable wraps at all panels, equipment racks and cabinets. Cable ties are specifically prohibited.

C. Cable ties for horizontal cables shall be secured with minimum required compression in order to secure the cables properly without impeding the signal transmission rating (geometry) of the cable. Hook and loop (Velcro) cable wraps may be used in lieu of cable ties for copper cables only. Cable-ties are specifically prohibited for fiber optic cables.

D. When pathways are not provided or specified, provide J-Hook supports from the building structure as required for cable runs to the cable drop location. Maximum distance between supports shall be five feet (1 500mm) depending on the structural elements of the building. Maximum number of cables per support shall be thirty. Provide additional supports as required when cable quantities exceed thirty and to maintain required bending radius of cables. Cables installed exposed or in areas subject to abuse (below 10 feet (3m) above finished floor) or in accessible areas shall be installed in conduit.

E. All cables shall be supported directly from building structure. Under no circumstance shall cable be installed using cross bracing, plumbing/sprinkler pipes, ceiling systems or any other system that is not a specifically approved method to independently support cables. Cables shall not be allowed to rest on ceiling tiles, duct work, piping, etc. Supports shall be provided as required in order for cables to avoid contact with any other building system. Bundle cables in groups by Room.

3.9 CABLE PROTECTION

A. Provide bushings in all metal studs and the like where cables will pass through. Bushings shall be of two-piece construction with one piece inserted through the opening and the second piece locking it into place. Single piece bushings with locking tabs or friction fit are specifically prohibited.

B. Cables to be installed in existing enclosed open bays or furred spaces where conduit stubs are not provided shall be protected from chafing or any damage. The Installer shall verify that the warranty shall not be violated before installing any cabling in these locations.

C. Provide cutting, coring, sleeves and bushings and seal as required at all penetrations.

D. Fiber optic backbone cables shall be installed in inner duct.

E. Cables damaged during installation shall not be repaired. They shall be completely replaced with new cable.

3.10 INSTALLATION

A. All cabling shall be installed in conduit where indicated on plans, or shall be installed open using other methods, approved by architect, such as J-Hooks.

1. Install wiring, per manufacturers recommendations. Use UL listed plenum cable in environmental air spaces including plenum ceilings.

B. All wiring shall be new and concealed in pipe where exposed.

C. All conduits and raceways shall have pull strings remaining after cable is pulled.

D. Impedance and Level Matching:

1. Carefully match input and output impedances and signal levels at signal interfaces. Provide matching networks where required.

E. Control Circuit Wiring:

1. Install control circuits in accordance with NFPA 70 and as indicated. Provide number of conductors as recommended by system manufacturer to provide control functions indicated or specified.
2. Make installation in strict accordance with approved manufacturer's drawings and instructions.
3. The Installer shall provide necessary transient protection on the AC power feed, all station lines leaving or entering the building, and all central office trunks. All protection shall be as recommended by the equipment supplier and referenced to earth ground.

F. Weatherproofing:

1. Provide weatherproof enclosures for items to be mounted outdoors or exposed to weather.

G. Typical Layouts and requirements of the specified systems:

1. Typical layout:
   a. Equipment racks and cabinets
   b. Backbone cabling
   c. Headend equipment
2. Typical layout of telecommunications equipment racks and cabinets.
   a. Each equipment rack and cabinet shall contain the following equipment:
      1) Fiber optic patch panel
      2) Fiber optic cable management
      3) Surge protector power strip
      4) Patch panels - Horizontal distribution
      5) Horizontal distribution cable management
      6) Vertical cable management
      7) Patch cords

b. Provide space for the installation of network electronics equipment in the equipment racks.

c. Furnish and install horizontal cable management between each patch panel (fiber optics, Hub distribution, Horizontal distribution, and telephone distribution).

d. Furnish and install horizontal distribution patch panels in each wire center with sufficient ports to terminate all modular jacks shown on the drawings plus twenty percent spares. The exact number of modular jacks and horizontal distribution patch panels shall be obtained from the drawings.

e. Furnish and install all equipment racks and cabinets required to support the aforementioned equipment.

f. The MDF room shall contain fiber optic patch panel quantities which correspond to the total number of fiber optic patch panels located in the IDF rooms.

g. Grounding bars shall be installed under SECTION 26 00 00. Furnish and install the required grounding to ensure that all of the aforementioned equipment is grounded and bonded.

3. Headend

a. The headend consists of connecting hardware for the following:

1) Paging System

2) Master Clock System

b. Final terminations from IDC cross connect block panels to telephone equipment and PBX by -Telephone Company and Equipment Installer. Coordinate with Telephone Company and Equipment Installer for final terminations.

c. Final terminations from the IDC cross connect block panels to the headend equipment shall be provided by the headend equipment installer.

d. Coordinate with the headend equipment installer and the electrical contractor for:

1) The installation of all the IDC cross connect block panels at the headend equipment. Installation shall be neat in appearance.

2) The final terminations at the headend.

3.11 TRAINING

A. As a minimum, training sessions shall consist of the following:

1. General project information and review shall be by the General Foreman or Superintendent of the Trade.

2. Specific system training shall be by a Factory Trained Representative.

3. Provide a complete review of the project and systems including, but not limited to, the following:

a. In a classroom environment review each Record Drawing (use of typicals is acceptable).

b. Note equipment layouts, locations and control points.

c. Review each system.

d. Review system design operation and philosophy.

e. Review alarms and necessary responses.
f. Review standard troubleshooting techniques for each system.
g. Review areas served by equipment.
h. Identify color codes used.
i. Review features and special functions.
j. Review maintenance requirements.
k. Review operation and maintenance manuals.
l. Respond to questions (record questions and answers).

4. After classroom training, walk the entire project, review each equipment room and typical locations. Explain equipment and proper operation.

B. During the instruction period the Owner and Maintenance Manual shall be used and explained.

C. The Owner and Maintenance Manual material shall be bound in 3-ring binders and indexed. On the edge of the binder provide a clear see-through plastic holder with a typed card indicating the Project name, the Architect's name, the installer's name and the Volume number (e.g., Vol. No. 1 of 2).

D. Provide name, address and telephone number of the manufacturer's representative and Service Company for all items supplied so that the source of replacement parts and service can be readily obtained.

1. Include copies of manufacturers and installer's warranties and maintenance contracts and performance bonds properly executed and signed by an authorized representative.
2. Include copies of all test reports and certifications.

3.12 ACCEPTANCE DEMONSTRATIONS

A. Systems installed under this Section shall be demonstrated to the Owner and Architect. Demonstrations are in addition to necessary testing and training sessions. Notify all parties at least 7 days prior to the scheduled demonstration. Schedule demonstrations, in cooperation with and at times convenient to all parties, so as to not disturb ongoing activities.

B. Systems shall be tested prior to the demonstrations and each system shall be fully operational and tested prior to arranging the Acceptance Demonstration. Final payments will be withheld until a satisfactory demonstration is provided for all systems indicated or requested.

C. If the demonstration is not totally complete, performing all functions, features and connections or interfaces with other systems, or if there is a failure during the demonstration, additional demonstrations shall be arranged. Provide and pay for all costs, labor and expenses incurred for all attendees for each additional demonstration required for acceptance and demonstration of complete system operation.

D. Demonstrations shall be scheduled in ample time to complete all activities prior to final acceptance and Owner occupancy. Demonstrations shall take place at least 30 days prior to the scheduled project completion date and 30 days prior to owner’s use

and occupancy.

E. As a minimum, provide demonstrations for systems indicated under "Work Included" under Part One of the Specifications. Provide demonstrations of additional systems as requested by the Owner, or Architect.

3.13 PROJECT OWNER COORDINATION

A. Prior to Substantial Completion of the project and in ample time to address and resolve any coordination issues, request and arrange meetings between the Owner, Owner's Vendors and Consultants, Architect and General Contractor to discuss the Scope of Work for each system being provided and the interface required for a fully functional and operational system upon project completion. Initial meetings shall be scheduled three months prior to the scheduled Substantial Completion date or as soon as Submittals are submitted and reviewed for projects with shorter schedules.

B. At these meetings the required interface with the Owner shall be reviewed, requests for information required to complete programming or for coordination shall be presented and system operation and philosophy shall be discussed.

C. Additional meetings shall be held as requested by any party so that all issues are resolved and with the goal and intent being that all systems are fully operational and functional upon project Substantial Completion and that the responsibility for all components required is clearly established.

3.14 CLEANING UP

A. Upon completion of all work, and testing, thoroughly inspect all exposed portions of the installation and completely remove all exposed labels, markings, and foreign material.

B. The interior of all boxes and cabinets shall be left clean; exposed surfaces shall be cleaned and plated surfaces polished.

C. Repair damage to finish surfaces resulting from work under this Section.

D. Remove material and equipment from areas of work and storage areas.

E. All equipment shall be clean from dirt, dust, and fingerprints prior to final acceptance.

F. Touch up all damaged pre-finished equipment using materials and methods recommended by the Manufacturer.

3.15 PROJECT CLOSEOUT

A. Provide close out submittals as required herein and in DIVISION 01 including the following close out submittals.

1. Operation and Maintenance Manuals
2. Record Drawings.
3. Test Reports.

B. Obtain written receipts of acceptance close out submittals submitted. Receipts shall specifically detail what is being delivered (description, quantity and specification

section) and shall be dated and signed by firm delivering materials and by the Owner's Representative.

C. Construction Waste Management

D. Comply with Division 01 requirements for construction waste management and recycling.

3.16 SPARE PARTS/ATTIC STOCK:

A. REQUIREMENTS:

1. Provide attic stock of the following quantities and parts for each piece of equipment as follows:

Equipment/Unit	**Parts Description**	**Quantity**
Cables	UTP 4-pair Station Cable	1000'
	7 foot patch cables	100
Integrated Sound, PAS	Ceiling Speakers pair	1
	Exterior Speakers pair	1

End of Section

DO NOT REMOVE
THIS PAGE INTENTIONALLY LEFT BLANK

Section 27 08 00

COMMISSIONING OF COMMUNICATIONS

PART 1 – GENERAL

1.1 RELATED DOCUMENTS

A. Drawing and general provisions of the Contract, including General and Supplementary Conditions and other Division 01 Specification Sections, apply to this section.

1.2 SUMMARY

A. This section includes commissioning process requirements for communication systems, assemblies and equipment.

B. Related Sections:

1. Division 01 Section “General Commissioning Requirements” for general commissioning process requirements.

1.3 DESCRIPTION

A. Refer to Division 01 Section “General Commissioning Requirements” for the description of commissioning.

1.4 DEFINITIONS

A. Refer to Division 01 Section “General Commissioning Requirements” for definitions.

1.5 SUBMITTALS

A. Refer to Division 01 Section “General Commissioning Requirements” for CxA’s role.

B. Refer to Division 01 Section “Submittals” for specific requirements. In addition, provide the following:

C. Certificates of readiness

D. Certificates of completion of installation, prestart, and startup activities

E. O&M manuals

F. Test Reports.

1.6 QUALITY ASSURANCE

A. Test Equipment Calibration Requirements: Contractors will comply with test manufacturer' calibration procedures and intervals. Recalibrate test instruments immediately after instruments have been repaired resulting from being dropped or damaged. Affix calibration tags to test instruments. Furnish calibration records to CxA upon request.

1.7 COORDINATION

A. Refer to Division 01 Section "General Commissioning Requirements" for requirements pertaining to coordination during the commissioning process.

PART 2 – PRODUCTS

2.1 TEST EQUIPMENT

A. All standard testing equipment required to perform startup, initial checkout and functional performance testing shall be provided by the Contractor for the equipment being tested. For example, the communication contractor of Division 27 shall ultimately be responsible for all standard testing equipment for the communication system in Division 27. A sufficient quantity of two-way radios shall be provided by each subcontractor.

B. Special equipment, tools and instruments (specific to a piece of equipment and only available from vendor) required for testing shall be included in the base bid price to the Owner and left on site, except for stand-alone data logging equipment that may be used by the CxA.

C. Proprietary test equipment and software required by any equipment manufacturer for programming and/or start-up, whether specified or not, shall be provided by the manufacturer of the equipment. Manufacturer shall provide the test equipment, demonstrate its use, and assist in the commissioning process as needed. Proprietary test equipment (and software) shall become the property of the Owner upon completion of the commissioning process.

D. All testing equipment shall be of sufficient quality and accuracy to test and/or measure system performance with the tolerances specified in the Specifications.

PART 3 – EXECUTION

3.1 GENERAL DOCUMENTATION

A. With assistance from the installing contractors, the CxA will prepare Pre-Functional Checklists for all commissioned components, equipment, and systems

B. **Red-lined Drawing**: The contractor will verify all equipment, systems, instrumentation, wiring and components are shown correctly on red-lined drawing. Preliminary red-lined drawings must be made available to the Commissioning Team

for use prior to the start of Functional Performance Testing. Changes, as a result of Functional Testing, must be incorporated into the final as-built drawings, which will be created from the red-lined drawings. The contracted party, as defined in the Contract Documents will create the as-built drawings.

C. **Operation and Maintenance Data**: Contractor will provide a copy of O&M literature within 45 days of each submittal acceptance for use during the commissioning process for all commissioned equipment and systems. The CxA will review the O&M literature once for conformance to project requirements. The CxA will receive a copy of the final approved O&M literature once corrections have been made by the Contractor.

D. **Demonstration and Training**: Contractor will provide demonstration and training as required by the specifications. A complete training plan and schedule must be submitted by the contractor to the CxA four weeks (4) prior to any training. A training agenda for each training session must be submitted to the CxA one (1) week prior to the training session.

3.2 CONTRACTOR'S RESPONSIBILITIES

A. Perform commissioning tests at the direction of the CxA.

B. Attend construction phase controls coordination meetings.

C. Participate in communication systems, assemblies, equipment, and component maintenance orientation and inspection as directed by the CxA.

D. Provide information requested by the CxA for final commissioning documentation.

E. Include requirements for submittal data, operation and maintenance data, and training in each purchase order or sub-contract written.

F. Prepare preliminary schedule for Communication system orientations and inspections, operation and maintenance manual submissions, training sessions, equipment start-up task completion for owner. Distribute preliminary schedule to commissioning team members.

G. Update schedule as required throughout the construction period.

H. Assist the CxA in all verification and functional performance tests.

I. Provide measuring instruments and logging devices to record test data, and provide data acquisition equipment to record data for the complete range of testing for the required test period.

J. Gather operation and maintenance literature on all equipment, and assemble in binders as required by the specifications. Submit to CxA 45 days after submittal acceptance.

K. Coordinate with the CxA to provide 48-hour advance notice so that the witnessing of equipment and system start-up and testing can begin.

L. Participate in, and schedule vendors and contractors to participate in the training sessions.

M. Provide written notification to the CM/GC and CxA that the following work has been completed in accordance with the contract documents, and that the equipment, systems, and sub-system are operating as required.

1. Communication Systems (example: cabling, routers, switches, fiber patch panels, software, fiber-optic cable, server racks, CAT 5E cable, CAT 6 cable, CAT 6a cable, computers, etc. to provide entire communication network) and all other equipment furnished under this Division.

N. The equipment supplier shall document the performance of his equipment.

O. Provide a complete set of red-lined drawings to the CxA prior to the start of Functional Performance Testing.

P. Equipment Suppliers

1. Provide all requested submittal data, including detailed start-up procedures and specific responsibilities of the Owner, to keep warranties in force.
2. Assist in equipment testing per agreements with contractors.
3. Provide information requested by CxA regarding equipment sequence of operation and testing procedures.

Q. Refer to Division 01 Section “General Commissioning Requirements” for additional Contractor responsibilities.

3.3 CxA’S RESPONSIBILITIES

A. Refer to Division 01 Section “General Commissioning Requirements” for CxA’s Responsibilities.

3.4 TESTING PREPARATION

A. Certify in writing to the CxA that communication systems, subsystems, and equipment have been installed, calibrated, and started and are operating according to the Contract Documents.

B. Certify in writing to the CxA that communication instrumentation and controls have been completed and calibrated, that they are operating according to the Contract Documents, and that pretest set points have been recorded.

C. Certify in writing that testing procedures have been completed and that testing reports have been submitted, discrepancies corrected, and corrective work approved.

D. Place systems, subsystems, and equipment into operating mode to be tested (e.g., normal shutdown, normal auto position, normal manual position, unoccupied cycle, emergency power, and alarm conditions).

E. Inspect and verify the position of each device and interlock identified on checklist.

F. Testing Instrumentation: Install measuring instruments and logging devices to record test data as directed by the CxA.

3.5 GENERAL TESTING REQUIREMENTS

A. Provide technicians, instrumentation, and tools to perform commissioning test at the direction of the CxA.

B. Scope of Communication systems testing shall include the entire communication equipment installation, from the incoming equipment throughout the distribution system. Testing shall include all equipment and devices.

C. Test all operating modes, interlocks, control responses, and responses to abnormal or emergency conditions, and verify proper response of building automation system controllers and sensors.

D. The CxA along with the communications contractor(s) and other contracted subcontractors, shall prepare detailed testing plans, procedures, and checklists for communication systems, subsystems, and equipment.

E. Tests will be performed using design conditions whenever possible.

F. Simulated conditions may need to be imposed using an artificial load when it is not practical to test under design conditions. Before simulating conditions, calibrate testing instruments. Provide equipment to simulate loads. Set simulated conditions as directed by the CxA and document simulated conditions and methods of simulation. After tests, return settings to normal operating conditions.

G. The CxA may direct that set points be altered when simulating conditions is not practical.

H. The CxA may direct that sensor values be altered with a signal generator when design or simulating conditions and altering set points are not practical.

I. If tests cannot be completed because of a deficiency outside the scope of the Communication system, document the deficiency and report it to the Owner. After deficiencies are resolved, reschedule tests.

J. If the testing plan indicates specific seasonal testing, complete appropriate initial performance tests and documentation and schedule seasonal tests.

3.6 COMMUNICATION SYSTEMS, SUBSYSTEMS, AND EQUIPMENT TESTING PROCEDURES

A. **Equipment Testing and Acceptance Procedures:** Testing requirements are specified in individual Division 27 sections. Provide submittals, test data, inspector record and certifications to the CA.

B. **Communication System Testing:** Field testing plans and testing requirements are specified in Division 27 Sections. Assist the CxA with preparation of testing plans.

C. **Communication System Testing:** Provide technicians, instrumentation, tools and equipment to test performance of designated systems and devices at the direction of the CxA. The CxA shall determine the sequence of testing and testing procedures for each equipment item to be tested.

D. The work included in the commissioning process involves a complete and thorough evaluation of the operation and performance of all components, systems and sub-systems. The following equipment and systems shall be evaluated:

1. Cabling, switches, servers, routers, interfaces and terminals
2. Master clock system
3. Public address system
4. Coordination and functionality with the Building Automation System/Building Management Controls System, if applicable

3.7 DEFICIENCIES/NON-CONFORMANCE, COST OF RETESTING, FAILURE DUE TO MANUFACTURER DEFECT

A. Refer to Division 01 Section “General Commissioning Requirements” for requirements pertaining to deficiencies/non-conformance, cost of retesting, or failure due to manufacturer defect.

3.8 APPROVAL

A. Refer to Division 01 Section “General Commissioning Requirements” for approval procedures.

3.9 DEFERRED TESTING

A. Refer to Division 01 Section “General Commissioning Requirements” for requirements pertaining to deferred testing.

3.10 OPERATION AND MAINTENANCE MANUALS

A. The Operation and Maintenance Manuals shall conform to Contract Documents requirements as stated in Division 01.

B. Refer to Division 01 Section “General Commissioning Requirements” for the AE and CxA roles in the Operation and Maintenance Manual contribution, review and approval process.

3.11 TRAINING OF OWNER PERSONNEL

A. Refer to Division 01 Section “General Commissioning Requirements” for requirements pertaining to training.

End of Section

DO NOT REMOVE
THIS PAGE INTENTIONALLY LEFT BLANK

Section 27 41 00
AUDIOVISUAL SYSTEMS

PART 1 - GENERAL

1.01 APPLICABLE PROVISIONS OF THE CONDITIONS OF THE CONTRACT AND DIVISION #1, GENERAL REQUIREMENTS, GOVERN WORK IN THIS SECTION.

1.02 DESCRIPTION OF WORK

A. The work of this Section consists of the provision of materials, labor, and equipment and the like necessary and/or required for the complete execution of audiovisual equipment and related work for this project as required by the schedules, keynotes and drawings, including, but not limited to the following:
   1. Unless otherwise specified, supply only new equipment, parts and material, and protect equipment from construction dust and debris until final acceptance. Operate only as required for testing as part of installation procedure. Provision of manufactured components, installation, wiring, and testing is the responsibility of a single contractor.
   2. The system drawings indicate the general layout of the various items of equipment and their functional relationships. However, layout of equipment, accessories, and conduit systems are diagrammatic unless specifically detailed and do not necessarily indicate every item required for a complete installation. Provide any incidental equipment needed in order to result in a complete and operable system even if not specified or shown on drawings without claim for additional payment.
   3. Quantities of major installed and portable equipment, including any add- or deduct- alternates, are indicated on the system and electrical drawings. Quantities of portable equipment are indicated in schedules contained in the drawings or specifications; quantities of installed equipment are determined by examining the functional diagrams, plans, and riser diagrams.
   4. Refer to audiovisual plan drawings for receptacle back box location and quantity information. Also, refer to architectural reflected ceiling plans for exact location of ceiling-mounted devices.
   5. Verify correctness of parts lists and equipment model numbers and conformance of each component with manufacturer's specifications.
   6. Obtain permits necessary for the execution of the work. Comply with applicable local codes and regulations.
   7. Provide inserts; cover plates, etc. as required for a complete system.
   8. Supply and install strut channel hardware above finished ceiling for mounting of video projectors.

B. Functional Requirements of Systems:
   1. Gymnasium Sound and Video System
      a. Ceiling-mounted loudspeaker set up in zones to cover the seating areas and floor area separately.
      b. Wireless hand held microphone and XLR line input for auxiliary audio sources.
      c. Wall-mounted touch panel to control input source select and volume control.

d. Video projection screen and projector to show local input or overflow from Auditorium AV system

2. Auditorium AV System
   a. Video projection system with wall/ceiling mounted video projector to show and image on a motorized video projection screen located above the stage area.
      1) Sources include wired HDMI input located on the stage and at the control location.
   b. Suspended left and right program loudspeakers to playback audio from video sources and local microphone inputs.
   c. Wired and wireless microphone systems for voice amplification.
   d. Various input plates on the stage area for additional microphone connections. All visible faceplates in the Auditorium are to be satin bronze finish.
   e. Self-powered monitor loudspeakers for on-stage monitoring of audio sources.
   f. Video camera location in auditorium to show stage in remote locations in the school, including:
      1) Green room
      2) Band, Chorus, and Drama rooms
      3) Cafeteria
      4) Gymnasium
   g. Wall-mounted and portable control panel to control AV system.
      1) Power On/Off
      2) Video and audio source select.
      3) Basic audio mixing
3. Band, Chorus, and Drama Rooms
   a. Stereo audio playback speakers.
   b. Classroom AV Flat panel display with HDMI & wireless input and touch sensitive overlay to be provided by Owner (not to be supplied as part of the AV scope).
   c. Stereo or pair of hanging microphones.
   d. Simple hard disk recording and playback system for rehearsals.
   e. Classroom AV system to show video feed from auditorium.
   f. Band Room: microphone inputs with connection to the auditorium sound system.
4. Cafeteria/Learning Commons
   a. Video projection system with ceiling mounted video projector to show and image on a motorized video projection screen. The video projector will be mounted in a motorized video projector lift that will raise the video projector into the ceiling when not in use.
   b. Video feed from auditorium
   c. Loudspeaker mounted in a niche to play back local audio and audio from video source, including auditorium feed.
   d. Wireless hand held microphone and XLR line input for auxiliary audio sources.
   e. Wall-mounted touch panel to control input source select and volume control.

C. Related Work Specified Elsewhere:
   1. Metals (05 00 00)

2. Rough Carpentry (06 10 00)
3. Finish Carpentry (06 20 00)
4. Heating, Ventilating, and Air-Conditioning (23 00 00)
5. Electrical (26 00 00)
6. Communications (27 00 00)
7. Structured Cabling (27 10 00)

D. Definitions:
1. Owner: Fuller Middle School.
2. Architect: Jonathan Levi Architects.
3. Consultant: Acentech Incorporated.
4. Bidder: Audiovisual contractor or other entity generating the response to this set of audiovisual bid documents.
5. Audiovisual Contractor or Contractor: Company responsible for work under this section.
6. Furnish: procure, and deliver the equipment to the job site, freight prepaid, for receipt, staging, and installation by others.
7. Install: Provide, store, unpack, and securely attach or mount equipment to structure following industry standards, approved shop drawings, and manufacturer recommendations.
8. Provide: Furnish and Install equipment.
9. Provided by Others and Not in Contract (NIC): Work related to this contract, but will be provided by parties other than the AV Contractor.
10. Owner-Furnished Contractor Installed (OFCI) or Owner-Furnished Equipment (OFE): Equipment furnished by the Owner for installation by the Audiovisual contractor. The Audiovisual contractor shall be responsible for installing and integrating this equipment as detailed herein.
11. Installation Materials: Installed cable, loose cable, terminations, cable management, voice/data/video patch cords, adapters, I/O panels, cable dressing, lacing bars, copper bus bars, labels, rack shelves, rack mounts, power strips/distribution, and other materials as needed to install the systems.

E. Equipment Furnished by Audiovisual Contractor and Installed By Others:
1. Provide the following device boxes/conduit boxes to the Electrical Contractor for installation:
   a. Floor Boxes
   b. Display Monitor boxes
   c. Ceiling Speaker back boxes
   d. Local Control Back boxes
   e. Information Display Panel back boxes
   f. Others as indicated on AV Contract Drawings or required

1.03 SUBMITTAL REQUIREMENTS

A. General:
1. Provided in Division 01
2. Contractor must provide four submissions as described in this specification. Those submissions include:
   a. Bid submission
   b. Shop drawing, bill of materials, and programming

c. Test reports
d. As-Built drawings and operation manuals

3. Delivery Schedule:
   a. Bid submittal package: By date specified, to include:
      1) Basis of bid documents, including:
         a) Itemized equipment costs for specified equipment or APPROVED substitutions.
         b) Qualifications/References
         c) Certifications (including certificate of bonding, if required)
         d) Proposed payment terms
   b. Bill of material submission: No later than 30 days following award of contract provide the following as one unified package:
      1) Bill of materials
      2) Manufacturer product data sheets
   c. Shop drawing submission: No later than 60 days following award of contract provide the following as one unified package:
      1) Shop drawings.
      2) Control system layouts and digital signal processing configurations.
   d. Test result submission: One week before acceptance testing provide the following:
      1) System test and certification reports
      2) Owner's manuals with manufacturers' equipment manuals
      3) One (1) draft copy of user operational manuals
      4) One (1) draft copy of "as-built" system diagrams
   e. As-built drawings and operational manual submission: Within 30 days after final acceptance testing visit provide the following:
      1) Final as-built system diagrams in hard copy and editable electronic file formats.
      2) Final user operational manuals in hard copy and editable electronic file formats.
      3) Control software for AV Control System, digital signal processors, and other programmable devices. Include complete job-specific source code files.
      4) Custom finish material samples, if applicable.
4. Unless otherwise directed by contract, do not order equipment until the bill of materials has been reviewed and approved by the AV consultant.
5. Approval for isolated items will not be considered, except by prior AV consultant authorization.
6. Rejected items and items requiring correction must be resubmitted together, unless authorized otherwise.

1.04 BID SUBMITTALS

A. As defined in Division 01.

B. Instructions to Bidders: To be considered, Bids must be made in accord with the Architect's Instructions to Bidders and this Article.

C. Examinations: Carefully examine the contract documents and the construction site to obtain first-hand knowledge of existing conditions. Contractors will not be given

extra payments for conditions that can be determined by examining documents on-site, and will not be relieved of any obligations with respect to bid.

D. Equipment for the project is shown on the plans, reflected ceiling plans, elevations, and functional diagrams. The contractor must develop a list of equipment for each type of space detailed on the drawings. Contractor is responsible for providing miscellaneous parts to provide a complete and working audiovisual system in each of the spaces outlined in the drawings.

E. The system was designed around the Crestron control system. AMX or Extron is an acceptable substitute. The contractor will be responsible for providing the equipment necessary to provide a complete system if AMX or Extron is provided.

F. Equipment: The contractor must refer to this specification, drawings and addendums in preparing the bid response. The contractor is responsible for providing complete and working systems for each of the spaces outlined in the documents.

G. Questions: Submit questions about the contract documents in writing. Replies requiring changes to the contract documents will be issued to bidders as addenda and will become part of the Contract. The Architect and Owner may give, but will not be responsible for oral clarifications. Questions received less than 10 days before bid date cannot be answered in writing.

H. Acceptable Products: Model numbers and manufacturers identified herein indicate a standard of quality and performance. Other products will be considered, subject to approval of complete technical data, samples and results of independent testing of proposed equipment, submitted in accordance with Division 1 requirements and “Substitutions” section below.

I. Substitutions: To obtain approval for substitutions and for items identified as "approved equal", submit written requests at least 10 days before bid date. Requests received after this time will not be considered. Requests shall clearly describe the product for which approval is asked, including data necessary to demonstrate acceptability. If the product is acceptable, an Addendum may be issued to bidders.

J. Equipment Availability: Verify with manufacturers availability and cost of equipment proposed, including equipment specified herein. No cost increases will be allowed for manufacturers' cost increases, or for substitutions required because of unavailability of proposed equipment.

K. Performance Bond: The successful bidder will furnish a Performance Payment Bond and Labor and Material Bond, underwritten by a surety company approved by the Architect and Owner, for fulfillment of provisions of the contract.

L. Basis of Bids:
   1. Submissions will be provided in electronic format described below. Electronic submissions must be supplied in Microsoft Excel. *.xls or *.xlsx format.

2. Include a complete itemized list for each base-bid system indicating the manufacturer, model number, unit cost and total costs for specified items. Itemization of miscellaneous equipment such as cable, switches, and receptacles is not required.
3. Clearly indicate the total cost, including expenses, for each individual system to allow the Owner to select any or all systems to be included in the contract. Itemization of miscellaneous equipment such as cable, switches, and receptacles is not required.
4. Organize each list with the information presented, in the order that it appears in this specification, in 6 columns from left to right:
   a. Paragraph number as it appears in this specification.
   b. Paragraph title as it appears in this specification.
   c. Manufacturer and model number.
   d. Quantity.
   e. Unit Cost.
   f. Extension (unit cost times quantity).
   g. Example:

Paragraph #	Paragraph Title	Manufacturer & Model Number	Qty.	Unit Cost	Extended Cost
Section 2.1	Microphones				
2.1.B	Hand-Held Microphone	xxx	#	$x	$xxx

5. At the end of each list indicate the cost of other items, such as for miscellaneous equipment, engineering, installation labor, overhead, taxes, etc.
6. On a separate list, indicate costs of any specified add- or deduct-alternates with the information presented in the same manner as for the base-bid system.
7. Include a listing of any voluntary alternates proposed by the bidder as substitutions or additions to the specified systems.
8. Include any notes or comments if necessary to qualify the bid.
9. Identify any sub-contractors and indicate the work they are to do.
10. Provide documentation of ability in installing similar systems. Furnish the names, addresses, and telephone numbers of the System Designer, Architect, General Contractor, and Owner on three projects similar in scope, which the Contractor has installed within the last 5 years.
11. Include certification of ownership and full familiarity with the operation of the following minimum test equipment. Provide a list of the manufacturer, model, and serial number for each item of test equipment required.
    a. Audio Test Equipment:
        1) SMAART, EASERA or similar measurement platform that includes a laptop computer, audio preamp, Type 1 measurement microphone, cables, and stands, to complete the system test.
        2) AC impedance bridge.
        3) Sound level meter and octave band filter set.
        4) Digital Multimeter.
        5) Calibrator with appropriate microphone adapter similar to General Radio, Norsonic, or Rion calibrators.

6) Random or pseudo-random pink noise generator.
7) Plug and cable tester (suggested: Whirlwind DCT-9 or PylePro PCT40).
8) Loudspeaker polarity indicator (suggested: BSS Audio AR130,).

b. Video Test Equipment:
1) Photometer with luminance and illuminance probes.
2) TriStimulus Color Analyzer with Laptop computer (suggested: Sencor OTC1000-CM).
3) Multi-frequency computer RGB test pattern generator (suggested: Extron VTG-300R, VTG-400D or VTG-400DVI).
4) HDMI test pattern generator (suggested: Quantum Data 780BH)
5) HDMI cable test instrument similar to the Quantum Data 780BH.
6) Coaxial cable test kit (for testing whether in-place cable will support SDI signals): FM Systems CTG-500 kit.

c. Video Studio/Production Test Equipment:
1) Camera Test & Setup Charts (DSC Labs or equal; Grayscale, Colorbar, Skin Tone).
2) Handheld Waveform/Vectorscope (suggested Leader LV5333).
3) Handheld HD Generator (Hamlet Axiom or equal).

M. QUALITY ASSURANCE
1. Project Management: Maintain the same person in charge of work throughout installation.
2. Contract Documents: Maintain a complete set of system drawings and specifications at the site during installation.
3. Fabrication and Installation: Completely fabricate equipment racks and subassemblies in contractor fabrication shop. Make field connections of audio, video, and control wiring including microphone, line level, loudspeaker, video, and control system circuits to equipment, equipment racks, and connection panels. Continuously supervise the installation and connection of cable and equipment.
4. Contractor Qualifications: To be considered qualified for this work; the contracting firm must be experienced in the provision of audiovisual systems similar in complexity to those required for this project, and meet the following:
a. The Contractor’s primary business is the provision, fabrication, and installation of professional audiovisual and related systems.
b. The Contractor has been regularly engaged in the installation and service of professional audiovisual presentation systems for a period of at least five years.
c. The Contractor is an authorized dealer for the specified Audiovisual Control System systems.
d. The contractor employs a Certified programmer for programming Audiovisual Control System, as required.
e. The Contractor is, at a minimum, Avixa certified solution provider, with at least (1) CTS-I and (1) CTS-D certified employee on-site for the duration of the installation.

f. The contractor has a Crestron/Extron/AMX/etc.Certified Installer onsite during the installation and termination of HDBaseT or similar digital transmission systems (DigitalMedia, XTP, DTP, or DGX) equipment, as required.

g. At the request of the Architect, demonstrate the following capabilities:

1) Adequate plans and equipment to complete the work.

2) Sufficient staff with appropriate technical experience to oversee and execute the work.

5. Subcontractors: The Contractor may arrange for sub-contract field and special shop work to be done by others.

1.05 SUBSTITUTIONS

1. General: The Contractor has the burden of proving, at the Contractor's own cost and expense and to the satisfaction of the Architect, that the proposed product is similar and equal to the named product.

2. Basis:

a. Requests for acceptance of proposed equivalents made following the award of bid will be considered by the Architect only in the following cases:

1) The named products cannot be obtained by the Contractor because of strikes, lockouts, bankruptcies or discontinuance of manufacturer and the Contractor makes a written request to the Architect for consideration of the proposed equivalent.

2) The proposed equivalent, in the opinion of the Architect, is equal or superior to the named product and its use is to the advantage of the Owner.

b. A formal request must be made for the substitution documenting fully the above reason. Include complete data on the proposed substitution substantiating compliance with the Contract Documents including: product identification and description, performance and test data, references and samples where applicable, and an itemized comparison of the proposed substitution with the products specified or named by Addenda, with data relating to Contract time schedule, design and artistic effect where applicable, and its relationship to separate contracts. Accompany the request by accurate installed cost data on the proposed substitution in comparison with the product specified.

3. Consideration:

a. A request for substitution is a representation by the Contractor that:

1) The Contractor has personally investigated the proposed substitution and determined that it is equal or superior to that specified.

2) The Contractor will provide the same warranty for the substitution that would be for that specified.

3) The cost data presented are complete and include related costs under this Contract, but exclude costs under separate contracts and exclude Architect's re-design costs, and that the Contractor waives claims for additional costs related to the substitution, which subsequently become apparent.

4) Indicate if there will be any cost impact on work by other trades.

5) The Contractor will coordinate the installation of the accepted substitute, making such changes as may be required for the Work to be complete.

b. Change Order modifying the Specifications will document an accepted substitution. The Contract Price will be changed only if the substitution results in cost savings to the Owner.

1.06 SHOP DRAWING AND BILL OF MATERIAL SUBMITTALS

A. Coordinate submittals with requirements set forth in Section 00 10 00 Solicitation.

B. CAD drawings will be in current AutoCAD .dwg format (with bound XREFs) or portable document format (PDF). Other submissions will be provided as PDFs, unless otherwise stated.

C. Shop Drawings and Bill of Materials Submittals:

1. General:

a. The following is required for approval, prior to ordering product, fabrication, and installation. Submit complete and at one time. Isolated items will not be considered for approval, except by prior authorization. Rejected items and items requiring correction must be resubmitted at one time, except by prior authorization.

b. Submittals shall be provided as complete electronic PDF files that include the following:

1) A single collated file of the Bill of Materials for each system, listed in the order it appears in this specification, configured to print on standard 8-1/2” x 11” or 11” x 17” paper.

2) A single collated file of cut sheets for equipment listed in this specification configured to print on standard 8-1/2” x 11” paper.

3) A single collated file containing drawings configured to print as a full-size set at project standard sheet size.

4) Control system touch panel layouts, as identified below.

5) Digital signal processing layouts, as identified below.

c. The diagrams and details included with these specifications, modified to reflect the stated requirements and to reflect the details of the system as awarded, and including additional required information, may be used in preparing shop drawings. Drawings that are submitted without the necessary modifications will be rejected.

2. Bill of Materials and Catalog Data Sheets:

a. Bill of Materials and Catalog Data Sheets of manufactured items. At the end of the Bill of Materials include Catalog Data Sheets (“cut” sheets) for product arranged in the order listed in the specifications and in the Bill of Materials. Include a cover page identifying the project and submittal. Organize the Bill of Materials in 6 columns from left to right:

3. Paragraph number as it appears in this specification.

1) Paragraph title as it appears in this specification.

2) Manufacturer.

3) Model number.

4) Quantity.

5) Comments (if any are needed).

6) Example:

Paragraph #	Paragraph Title	Manufacturer	Model No.	Qty.	Comments
Section 2.1	Microphones				
2.1.B	Hand-Held Mic	xxx	xxx	#	

b. Audiovisual Control System and Digital Signal Processing:
   1) Detailed control panel layouts and control logic notes, prepared by the control system programmer:
      a) Provide tree diagrams indicating signal flow for review and approval by Owner and AV Consultant.
      b) Upon approval of the above by AV Consultant, and prior to beginning control system code development, provide color draft set of control system touch panel layout diagrams (Graphic User Interface) for review and approval by Owner and AV consultant, noting comments from prior review. Include text, buttons, colors, images, and backgrounds as well as page flips, sub-pages, and overall page logic flow.
      c) Upon approval of the above by AV Consultant, provide control system touch panel programming file for final review and approval by Owner and AV consultant, noting comments from prior review.
   2) Detailed layouts for digital signal processors:
      a) Signal flow diagrams.
      b) Detail presets and interconnection to audiovisual control system.

D. Samples:
   1. Finish for control panels, racks, cabinets, and loudspeaker grilles.
   2. Mechanical connectors for use in wiring.

1.07 TEST REPORT SUBMITTALS

A. Test Reports: Upon completion of SYSTEM PERFORMANCE TESTS AND ADJUSTMENTS specified in PART 3 - EXECUTION, submit for approval in writing test results including numerical values for measurements. Also submit written certification that the installation conforms to specifications, is complete and operable, and is ready for FINAL ADJUSTMENTS AND ACCEPTANCE TESTS specified in PART 3 - EXECUTION. Provide three (3) copies unless otherwise specified.

1.08 AS-BUILT DRAWING AND OPERATION MANUAL SUBMISSIONS

A. Operation and Maintenance Data - Coordinate with Section 01700
   1. Draft Copies: At time of FINAL ADJUSTMENTS AND ACCEPTANCE TESTS specified in PART 3 - EXECUTION, provide draft copies of specified diagrams, schedules, and manuals for inspection during demonstration and acceptance testing. Submit final copies of documents within 30 days of project acceptance date. Drawings shall be drawn using the current version of AutoCAD. For Contractor-prepared drawings, schedules and instructions

provide (1) draft copy and (2) final copies in electronic format for inclusion in the specified Complete Instruction and Maintenance Manual.

2. Functional Diagrams: Simplified single line block diagram showing interconnection of major equipment components and functional relationships. Illustrate receptacles, patch panel jacks, attenuators, transformers, switches, and loudspeakers. Key each patch panel jack to the patch bay by row and jack number. Diagram shall not illustrate terminal or interconnection cable number designations The Functional Diagram included with these specifications, modified to exclude details, transformer tap designations, etc., and to provide the information described above and any as-built changes, is suitable for this purpose.
3. As-Built Diagrams:
   a. The intent of the diagrams is to provide sufficiently clear and complete information that a technician of average skill may efficiently troubleshoot and service the system, even if unfamiliar with the installation.
   b. Provide drawings showing terminal blocks, connectors, relays, switches, transformers, attenuators, equipment components, and wires. Label devices with manufacturer, model number, and reference number (e.g. "SW 15," "TB 6"); reference numbers shall be consistent across drawings with no repetitions. As a minimum, provide an expanded version of the functional diagrams with cables fanned out at termination points and labeling as specified above; provide additional drawings where system complexity does not permit complete information to be shown legibly on an individual sheet no larger than the project sheet size. Provide labels for cables continued onto another drawing, indicating termination device, terminal numbers, and drawing sheet on which the termination is shown.
   c. As-built drawings are to include full connection information for each termination of conductors within a cable, either on the drawing itself via cable breakouts or by designating the connection type and providing separate details for each connection type.
   d. Provide layout drawings of panels and other custom assemblies containing switches, relays, terminal blocks, receptacles, etc., using reference numbers to identify physical locations of devices or label devices with reference numbers in a location visible while viewing cable terminations. On wiring diagrams, label conductors within cables for insulation color or other identifier. Label connectors, barrier strips, switches, relay sockets, etc., for terminal number. If device does not provide terminal designations, provide key diagram for reference.
4. Receptacle Location Plan: Plan of area showing locations and designations of receptacles.
5. Building Plan: Plan drawing of the building indicating the areas covered by the various zone volume controls.
6. Patch Panel Assignment Schedule: Mount a typed schedule of patch panel assignments behind acrylic at the equipment racks.
7. Spare Parts List: List of consumable spare parts (projector lamps, air filters, etc.) with part numbers.

8. Control Setting Schedule: Fully document the settings of non-user-adjustable controls. This includes power amplifier gain controls, equalizer settings, etc.
9. Complete Instruction and Maintenance Manual: Prepare in the form of an instructional manual for use by Owner's personnel. Provide one (1) draft copy and two (2) final copies unless otherwise specified.
    1) Original Owner and Maintenance Manuals provided from manufacturer or high-quality color reproductions.
    b. Drawings: Provide sequenced bound drawings in project standard size.
10. Content of Manuals:
    a. Provide a table of contents arranged in systematic order. Identify each product by product name and other identifying symbols as set forth in Contract Documents.
    b. Contractor, name of responsible principal, address and telephone number.
    c. Certificate of Warranty for the system as a whole as well as copies of the manufacturer’s warranty for each equipment item.
    d. Service Contract. Include a preliminary schedule for the specified semi-annual site visits.
    e. Complete as-built diagram(s) for systems.
    f. Functional Diagram(s).
    g. Receptacle Location Plan(s).
    h. Patch Panel Assignment Schedule.
    i. Building Plan(s).
    j. Original copies, high-quality laser printer printouts of PDF files, or high-quality photocopies of manufacturers' installation, operation, and service manuals, including schematic diagrams for each equipment item.
    k. Shop drawings of custom-fabricated items.
    l. Control Setting Schedule.
    m. Audiovisual Control System:
        1) Color printouts of touch screens control panel graphic layouts, as installed.
        2) Listing of system brand, models and associated peripherals.
        3) DVD or USB flash drive containing the master program for the system, the touch screen display program (including macros), programming, communication, or other project-specific software required for re-programming, and a limited license agreement for the use and modification of contractor-generated source code in connection with the maintenance and modification of the system for which it was written.
    n. Software for Programmable Devices: Where a computer has been used in programming system components, provide DVD or USB flash drive containing the software, instructions for making interconnections to the programmed devices for the purpose of modifying the programming, and a limited license agreement for the use and modification of contractor-generated source code in connection with the maintenance and modification of the system for which it was written.

o. Applicable software and hardware licenses to be documented and original copies of the licensed provided to owner.

1.09 JOB CONDITIONS

A. Sequencing and Scheduling:
1. Coordinate work with adjacent work of other trades to facilitate construction and prevent conflicts.
2. Afford other trades reasonable opportunity for installation of work and for the storage of materials.
3. Staff the job to keep pace with the other Trades.
4. Abide by the decision of the Architect in case of conflict or interference by other trades.
5. Refuse: Remove refuse from the job site to the satisfaction of the Architect and Owner.

B. Insurance on the work of this specialty trade shall be provided as specified in Section 00810.

1.10 WARRANTY

A. Warrant equipment to be free of faulty workmanship and defects, and from damage due to contamination by construction dust and debris for a minimum period of one year from date of final acceptance.

B. Warrant repairs to "existing" equipment for a period of 90 days.

C. Emergency service: Within 24 hours of notification, restore the system to operation, replacing defective materials and repairing faulty workmanship. Make temporary repairs and provide loaner equipment at no charge if defective materials cannot be permanently replaced or repaired within this 24 hour time period.

D. Emergency service: alternate text for 24/7 operations.

E. Paint and exterior finishes, fuses, lamps, and projection lamps excluded from above warranties except when damage or failure results from defective materials or workmanship covered by warranty.

F. The minimum warranty provisions specified above shall not diminish the terms of individual equipment manufacturers' warranties.

1.11 SERVICE CONTRACT

A. Provide a one-year service contract to commence after acceptance of installation without additional cost. Service to include two semi-annual visits to the site for routine adjustment and maintenance of equipment. Provide a preliminary schedule for the semiannual visits.

B. Toward the end of each year's Service Contract, provide the owner with a proposal for continued service during the next year.

1.12 TRAINING

A. The Owner may assign personnel to participate with the contractor during installation. Without delaying the work, familiarize the Owner's personnel with the installation, equipment, and maintenance.

B. During tests and adjustments, permit the Owner's personnel to observe. When feasible explain the significance of each test.

C. Provide sufficient training to personnel selected by the Owner on operation and basic maintenance of systems and equipment. Explain operation of control systems, set-up, and operation of individual pieces of equipment and functions of overall systems.

D. Separate from the bid response quotation; provide an hourly cost for additional training.

1.13 INSPECTION

A. Notify the Architect of any defects in work by other trades affecting installation.

PART 2 - PRODUCTS

2.01 MICROPHONES AND ACCESSORIES

A. Wireless Microphone System
1. Wireless Microphone Receiver:
a. Predictive switching diversity.
b. Intelligent scanning automatically finds and deploys the cleanest frequencies to transmitters over IR sync.
c. Front panel gain adjustment buttons.
d. AES 256-bit encryption-enabled.
e. Front panel LCD menu and controls with lockout feature.
f. Audio and RF LED meters with peak indicator.
g. Built-in limiter circuitry prevents digital audio clipping from excessive signal levels.
h. Remoteable ½ wave antennas.
i. Minimum Overall Performance Requirements:
1) Frequency Response: 20-20,000 Hz.
2) Working Range: 330 ft, minimum.
j. Acceptable Products:
1) Shure ULX-D series receiver with UA820 half-wave antennas, and antenna amplifiers as required. Gymnasium antenna to be provided with protective plastic cover. Provide channel count, as required.
2) Approved equal.
2. Handheld Microphone/Transmitter
a. Handheld wireless microphone.
b. Frequency and power lockout.
c. Acceptable Products:

1) Shure ULXD2/SM58 with SB900 rechargeable battery and SBC200 battery charger.
2) Approved equal.

3. Body-Pack Transmitter:
   a. Backlit LCD with easy to navigate menu and controls.
   b. Rugged metal construction.
   c. Detachable ¼ wave antenna.
   d. Frequency and power lockout.
   e. Acceptable Products:
      1) Shure ULXD1 with SB900 rechargeable battery and SBC200 battery charger.
      2) Approved equal.
4. Earset Microphone:
   a. Miniature microphone with headband omnidirectional capsule.
   b. Frequency response: 20-20,000 Hz.
   c. Equivalent Noise: 24 dbA.
   d. Acceptable Products:
      1) Countryman H6 with appropriate transmitter connector.
      2) Approved equal.
5. In-Line Antenna Amplifier:
   a. Acceptable Products:
      1) Shure UA834WB.
      2) Approved equal.

B. Ceiling Microphone (Monitor)
1. Cardioid directional condenser microphone mounted on flexible 4-inch flexible gooseneck.
2. Minimum Performance Characteristics:
   a. Cardiod polar pattern.
   b. Frequency Response: 50 to 17,000 Hz.
   c. Output Impedance: 180 ohms.
   d. Sensitivity: -35.0 dBV/Pa (17.8 mV).
   e. Maximum SPL: 124.2 dB.
   f. Signal to Noise Radio (ref 94 dB SPL): 66dB.
3. Provide color as directed by architect.
4. Acceptable Products:
   a. Shure MX202x/C.
   b. Audio-Technica U853A.
   c. AKG HM1000.
   d. Approved equal.

A. Stereo Recording Microphone
1. Minimum Performance Characteristics:
   a. Element: Fixed-charge back plate, permanently polarized condenser
   b. Polar Patter: Cardioid.
   c. Frequency Response: 30-20,000 Hz.
   d. Impedance: Phantom: 200 ohms.
   e. Signal to Noise Ratio: 70 dB, 1 kHz at 1 Pa.
   f. Output Connector: Integral 3-pin XLRM-type.
   g. Phantom powered.
2. Acceptable Products:

a. One (1) Shure VP88 with cables and mounting accessories, as required.
b. Pair of Audio Technica U853A with AT8451 microphone hanger adapters. Provide with miscellaneous hardware to arrange pair of microphones to hang in an XY pattern, and accessories, as required. Provide color as directed by Architect.
c. Approved equal

B. Gooseneck Microphone with Desktop Base
1. Characteristics:
a. Cardioid directional condenser microphone mounted on flexible gooseneck with desktop base, programmable switch, and removable windscreen.
b. Matte-black finish, with 18" overall length.
c. Gooseneck flexible at top and bottom, with rigid center section.
d. 9 to 52 VDC phantom power.
2. Acceptable Products:
a. Shure MX418D/C with preamp, and windscreen.
b. Approved equal.

C. Handheld Microphone
1. Vocal microphone useable on microphone stand or hand-held for live performance, sound reinforcement, and recording.
2. Cardiod dynamic directional characteristic.
3. Built-in wind screen and shock mount.
4. Supply with 25 ft. cable and hardware for stand mounting.
5. Acceptable Products:
a. Shure SM58.
b. Sennheiser E825S.
c. AKG D5.
d. Audio-Technica AT2010.
e. Approved equal.

D. Microphone Floor Stands:
1. Black finish with tripod base and boom arm.
2. Acceptable Products:
a. Ultimate Pro T-T.
b. K&M 210/9.
c. AKG equivalent.
d. Approved equal

2.02 AUDIO MIXERS AND PREAMPS

A. Audio Recorder
1. Rack mountable audio recorder with balanced audio inputs and outputs.
2. Features:
a. Records to SD/SDHC and USB media in MP3 and WAV (up to 24-bit/44.1kHz).
b. Balanced and unbalanced inputs and outputs.
c. Front panel USB connection.

d. Dual Record feature (records to two media options simultaneously for primary and backup recording).

3. Acceptable Products:
   a. Denon DN-300R.
   b. Approved equal.

B. Digital Mixing Console (Auditorium)
1. Professional quality audio mixing console designed for live sound reinforcement, recording and reproduction of multi-channel sound effects, and stereo recording. Includes 32 input modules with direct outputs and insert points. All console assembly and construction performed completely by console manufacturer.
2. Features:
   a. Option slot module with 64/64 channel Dante I/O.
   b. 4 Stereo effects engines.
3. Mono Inputs:
   a. Linear fader, gain sensitivity adjustment, and channel On button.
   b. High-, mid-, and low-frequency equali2zer controls.
   c. Level LEDs: Illuminate green at dB below clipping.
   d. Assignment to group and program outputs with pushbuttons and pan pot.
   e. Balanced inputs, with 3-pin "XLR"-type connectors (mic) and switchable 48 volt phantom power; separate balanced inputs, with TRS phone jacks (line).
4. Group Outputs:
   a. Each with individual linear motion faders, LED bargraph meter, channel On buttons.
   b. Stereo Master Output:
   c. Two program outputs (L & R) with dual motion fader and two LED bargraph meters.
   d. Monitor section with volume control, source selector buttons, and stereo headphone, studio, and control room monitor outputs.
5. Minimum Performance Requirements:
   a. Frequency Response: 20-60,000 Hz, ± 0.5 dB (at +4 dBm output with equalization set in flat position).
   b. Hum and Noise: -126 EIN, -88 dB with one group fader and one input fader at nominal level (20-20,000 Hz, input termination of 150 ohms, all output assign switches ON, input sensitivity switches at "-60").
   c. Distortion: 0.008% THD at 1,000 Hz max gain.
   d. Maximum Output: +22 dBu.
6. Acceptable Products:
   a. Soundcraft Performer 3 provided with Dante I/O card, MADI card, and configured iPad control app. Provide with one Soundcraft Compact Stagebox with MADI card and 32 microphone inputs and 16 line outputs.
   b. Allen & Heath GLD-112 w/ Dante card and configured iPad control app and digital stage box.
   c. Approved equal.

C. Rack Mount Audio Mixer
1. 10-Channel Rackmount Mixer with Bluetooth.

2. Features:
    a. 4 XLR inputs; 2 in the front.
    b. Pre-fader and post-fader aux sends; stereo aux return.
    c. Bluetooth streaming with simple single-button pairing.
    d. Frequency Response: 20 Hz – 50 KHz, ±0.5 dB.
    e. Dynamic Range: 108 dB.
    f. THD+N: < 0.005% (Mic/Line Input to Main Out)
3. Acceptable Products:
    a. DN-410X.
    b. Approved equal.

2.03 AUDIO PROCESSING EQUIPMENT

A. Digital Audio Signal Processor Type 1
1. Computer controlled digital signal processor.
2. Provide system with inputs and outputs as indicated on the functional drawings.
3. Features:
    a. Selectable audio inputs (balanced line level audio or microphone level).
    b. Any input assignable to any output.
    c. 24-bit DSP capable of limiters, matrix routing, delay, parametric/graphic equalizers, and high/low shelf equalization.
    d. RS-232 control port.
    e. Logic input/outputs for control.
    f. Configurable card frame for I/O cards.
4. Minimum Performance Requirements:
    a. Frequency Response: 20-20,000 Hz, ±0.5 dB.
    b. Distortion: 0.01% THD, 20-20,000 Hz, +10 dBu.
    c. Dynamic Range: 105 dB minimum, (A-weighted, 20Hz to 20kHz).
    d. Maximum Output: +24 dBu.
    e. Dante digital audio networking.
5. Acceptable Products:
    a. BSS BLU-806DA configured as shown on drawings..
    b. Biamp Tesira Server-IO with Dante audio network card, and audio input/output cards configured, configured as shown on drawings.
    c. Symetrix Edge configured as shown on drawings.
    d. QSC Qsys configured as shown on drawings.
    e. Approved equal.

B. Digital Audio Signal Processor Type 2
1. Computer controlled digital signal processor.
2. Provide system with inputs and outputs as indicated on the functional drawings.
3. Features:
    a. Selectable audio inputs (balanced line level audio or microphone level).
    b. Any input assignable to any output.
    c. 24-bit DSP capable of limiters, matrix routing, delay, parametric/graphic equalizers, and high/low shelf equalization.
    d. RS-232 control port.

e. Logic input/outputs for control.
f. Configurable card frame for I/O cards.

4. Minimum Performance Requirements:
   a. Frequency Response: 20-20,000 Hz, ±0.5 dB.
   b. Distortion: 0.01% THD, 20-20,000 Hz, +10 dBu.
   c. Dynamic Range: 105 dB minimum, (A-weighted, 20Hz to 20kHz).
   d. Maximum Output: +24 dBu.
5. Acceptable Products:
   a. BSS BLU-160 configured as shown on drawings, provide with BSS BLU-10 (color to be approved by Architect) as indicated on AV drawings.
   b. Biamp Tesira Server-IO with Dante audio network card, and audio input/output cards configured, configured as shown on drawings.
   c. Symetrix Edge configured as shown on drawings.
   d. QSC Qsys configured as shown on drawings.
   e. Approved equal.

C. Microphone Preamp
1. Dual channel microphone preamplifier with line-level outputs.
2. Minimum Performance Requirements:
   a. Balanced XLR Microphone Inputs
   b. Independent Controls for Each Preamplifier
   c. Front-Panel 20 to 60 dB Gain Control
   d. Switch-selectable 48 Volt Phantom
   e. Switch-Selectable 15 dB Input Pad
   f. Switch-Selectable Polarity Reversal
   g. CLIP Indicators for Peaks 3 dB Below Clipping
   h. Balanced Line-Level Outputs
3. Acceptable Products:
   a. Radio Design Labs HR-MP2A with PS-24AS power supply.
   b. Extron MP101 (one per microphone) with power supply.
   c. Approved equal.

D. Line Level Input Adapter
1. Stereo input to convert a consumer-level audio input to professional level mono output.
2. Minimum Performance Requirements:
   a. Frequency Response: 50-20,000 Hz ±1 dB.
   b. Decora mount.
   c. Outputs: Balanced, 600 ohm load, +22 dBv max.
3. Acceptable Products:
   a. Radio Design Labs DS-CIJ3 with mounting hardware. Color to be approved by Architect.
   b. Approved equal.

2.04 AUDIO DISTRIBUTION AND POWER AMPLIFIERS

A. 1-Channel Audio Amplifier
1. Single-channel power amplifier with continuous average output power of 60 watts (minimum) at 70-volts with a total harmonic distortion of 0.1% @ 1 kHz.

2. Features:
   a. Convection cooled, fanless operation.
   b. Mono operating mode.
3. Minimum Performance Requirements:
   a. Voltage Gain (dB): 35.
   b. Input Sensitivity: +4 dBu.
   c. Distortion: Less than 0.1%.
   d. Frequency Response: 80Hz to 20kHz, +1/-3dB.
   e. Damping Factor: Greater than 100.
   f. Noise (20-20,000 Hz) <-90dB.
   g. Input Impedance: 10k ohms unbalanced/balanced.
4. Acceptable Products
   a. Extron XPA-601-70.
   b. LabGruppen Lucia 60/1-70.
   c. QSC SPA2-60.
   d. Approved equal.

B. 4-Channel Audio Amplifier
1. Four-channel power amplifier with continuous average output power all channels driven of 5000 watts/ (minimum) at 4-ohms, 8-ohms, or at 70-volt (1250W/channel).
2. Features:
   a. Frequency Response (8 Ohms, 20Hz-20kHz): +/- 0.25 dB.
   b. Signal To Noise Ratio (A-weighted): > 108 dB.
   c. THD (at full rated power, 20Hz-20kHz): 0.35%.
   d. Voltage Gain: 34 dB.
   e. Damping Factor (20 Hz to 100 Hz): >1000.
3. Input Impedance (nominal balanced, unbalanced): 10 kOhms, 5 kOhms.
   a. Load Impedance (Stereo/Dual Mode):2-16 Ohms; 70Vrms and 100Vrms.
   b. Load Impedance Bridge Mono: 4-16 Ohms; 140Vrms and 200Vrms.
   c. Cooling: Continuously variable speed forced air, front to back airflow.
   d. Maximum Fan Noise (re dBA SPL @ 1M): 45.
4. Acceptable Products:
   a. Crown DCi 4|1250N.
   b. Approved equal.

C. 2-Channel Audio Amplifier Type 1
1. Two-channel power amplifier with continuous average output power all channels driven of 1200 watts (minimum) at 4-ohms or 8-ohms (600W/channel).
2. Features:
   a. Frequency Response: 8 Ohms, 2Hz-40kHz.
   b. Signal To Noise Ratio (A-weighted): > 112 dB.
   c. THD (at full rated power, 20Hz-20kHz): 0.05%.
   d. Gain: 32 dB.
   e. Cooling: Forced air, with temperature controlled fan.
3. Acceptable Products
   a. Crown DCi 2|600N.
   b. LabGruppen equivalent.

c. QSC equivalent.
d. Approved equal.

D. 2-Channel Audio Amplifier Type 2
1. Two-channel power amplifier with continuous average output power all channels driven of 600 watts (minimum) at 4-ohms or 8-ohms (300W/channel).
2. Features:
a. Frequency Response: 8 Ohms, 2Hz-40kHz.
b. Signal To Noise Ratio (A-weighted): > 112 dB.
c. THD (at full rated power, 20Hz-20kHz): 0.05%.
d. Gain: 32 dB.
e. Cooling: Forced air, with temperature controlled fan.
3. Acceptable Products
a. Crown DCi 2|300.
b. LabGruppen equivalent.
c. QSC equivalent.

E. 35W Attenuator
1. Single gang 70V loudspeaker attenuator.
2. Features:
a. 10 step auto transformer.
b. UL listed.
c. Wall Plate with dial scale.
d. 35W power rating.
e. 27 dB attenuation.
3. Acceptable Products:
a. Atlas Sound AT35.
b. Approved equal.

F. Headphone Amplifier
1. 4-Channel headphone distribution amplifier.
2. Features:
3. Acceptable Products:
a. PreSonus HP4.
b. AKG HP4E.
c. Aphex Headpod 4.
d. Approved equal.

2.05 LOUDSPEAKERS

A. Auditorium Line Array Loudspeakers
1. Two way line array element.
2. Minimum Performance Requirements:
3. Sensitivity: 90 dB (1W/1m)
4. Max SPL: 122 dB Peak, 1m
5. Dispersion:100° H
6. Freq. Response:70 Hz to 20 kHz
7. One 8" low frequency transducers and two 1" high frequency compression drivers.
8. Enclosure: Multi-ply hardwood, perforated metal grille

9. Acceptable Products:
   a. JBL VRX928LA with JBL suspension frame and rigging hardware as required to interface with the rigging and structural supports provided by the GC/Architect. Coordinate color with Architect.
   b. Renkus Heinz equivalent.
   c. Approved equal.

B. Auditorium Subwoofer
1. Minimum Performance Requirements:
   a. Sensitivity: 91 dB (1W/1m).
   b. Freq. Range: 35 Hz to 250 Hz.
   c. Max SPL: 126 dB peak.
   d. Power: 1600 W PGM
2. Acceptable Products:
   a. VRX915S with rigging hardware as required. Coordinate color with Architect.
   b. Renkus Heinz equivalent.
   c. Approved equal.

C. Ceiling Loudspeaker (S1, hard ceiling)
1. Two-way loudspeaker with separate low- and high-frequency cones and voice coils, polypropylene cone, and synthetic rubber surround; with attached 70 volt line matching transformer, enclosure, and narrow ring grill.
2. Minimum Performance Requirements:
   a. Frequency Response: 75-20,000 Hz, ± 10 dB, on axis.
   b. EIA Sensitivity: 89 dB.
   c. Power Handling Capacity: 150 watts.
   d. Voice Coil Impedance: 8 ohms.
   e. Transformer Taps: 7.5, 15, 30, and 60 watts.
3. Acceptable Products:
   a. JBL Control 26 CT.
   b. Atlas Sound FAP62T.
   c. QSC AC-C6T.
   d. Approved equal.

D. Ceiling Loudspeaker (S1, ACT ceiling)
1. Low-profile lay-In 2' x 2' ceiling tile loudspeaker.
2. Minimum Performance Requirements:
   a. Frequency Response: 100-16,000 Hz, ± 10 dB, on axis.
   b. Sensitivity: 96 dB.
   c. Power Handling Capacity: 40 watts.
   d. Voice Coil Impedance: 8 ohms.
   e. Transformer Taps: 2.5, 5, 10 watts.
3. Acceptable Products:
   a. JBL LCT 81C/T.
   b. Approved equal.

E. Gymnasium Speakers
1. Features:
   a. 2-way, full range.
   b. Symmetrical trapezoidal enclosure.

c. LF subsystem & loading: 1x 8”.
d. HF subsystem & loading: 1x25mm.

2. Minimum Performance Requirements:
   a. Frequency Response: -3 dB, 100-20,000 Hz.
   b. Frequency Response: -10 dB, 80-18,000 Hz.
   c. Axial Sensitivity (dB SPL, 1 Watt @ 1m): 94dB.
   d. Nominal Impedance: 8 Ophms.
   e. Power Handling (IEC Standard): 200 watts.
   f. Maximum Output (dB SPL @ 1m): 118 dB.
   g. Nominal Coverage Angle: 120° x 120°.
3. Acceptable Products:
   a. JBL AWC82 with transformer and mounting hardware as required. Loudspeaker and associated mounting hardware is to be provided in white.
   b. Community Loudspeaker R.25 with transformer and mounting hardware as required. Finish for loudspeaker and mounting hardware to be approved by Architect.
   c. Approved equal.

F. Headphones
1. Dynamic stereo headphones with supraural ear pads.
2. Features:
   a. Nominal Impedance: 600 ohms.
   b. Sensitivity: 0.77V (1 mW) for 94.3 dB SPL.
   c. Maximum Continuous Input: 11V (200 mW).
   d. Weight: 7.9 ounces without cable.
3. Acceptable Products:
   a. AKG K-240 MKII.
   b. Sennheiser HD 280.
   c. Beyerdynamic DT 990 PRO.
   d. Approved equal.

G. Powered Stage Monitor
1. Self-amplified loudspeaker system includes a 12” woofer and an extended range 1.5” HF driver coupled to high frequency horn.
2. Minimum Performance Requirements:
   a. Frequency Range (-3 dB): 65 to 18,000 Hz.
   b. Nominal Dispersion: 90°x60°
   c. Maximum SPL Output: 126 dB peak.
   d. Power Rating: 1000W.
   e. Input Connectors: 2 x Balanced XLR/1/4 inch input, 1 x 3.5mm.
3. Provide with stand and cable
4. Acceptable Products:
   a. JBL EON612 with tripod.
   b. Electro-Voice ZLX-12P with tripod.
   c. QSC K12.2 with tripod
   d. Approved equal.

H. Loudspeaker in Niche(Learning Commons)
1. 2-way full-range loudspeaker system comprised of one 258 mm low frequency driver and one 25 mm exit/35 mm voice-coil compression driver.

2. Minimum Performance Requirements:
   a. Frequency Response: 68-23,000 Hz, -10 dB.
   b. Nominal Impedance: 8 ohms.
   c. Max SPL: 118 dB peak.
   d. Sensitivity: 95 dB 1W/1m.
   e. Power Handling Capacity: 400 watts program.
3. Acceptable Products:
   a. JBL AC195 with mounting hardware.
   b. Renkus Heinz CX81 with mounting hardware
   c. Approved equal.

I. Wall Mount Loudspeaker (Band/Chorus)
1. 2-way full-range loudspeaker system comprised of one 258 mm low frequency driver and one 25 mm exit/35 mm voice-coil compression driver.
2. Minimum Performance Requirements:
   a. Frequency Response: 68-23,000 Hz, -10 dB.
   b. Nominal Impedance: 8 ohms.
   c. Max SPL: 118 dB peak.
   d. Sensitivity: 95 dB 1W/1m.
   e. Power Handling Capacity: 400 watts program.
3. Acceptable Products:
   a. JBL AC195 with wall mount hardware.
   b. Renkus Heinz CX82 with wall mount hardware
   c. Approved equal.

2.06 ASSISTIVE LISTENING

A. General: Locate antenna for ALS no farther than 200 feet from transmitter. Coordinate location of antenna with Owner, Architect, and Electrical Contractor.

B. Provide with the sufficient receivers to meet the 2010 ADA standards with 25% of the receivers to be hearing-aid compatible

C. Assistive Listening Transmitter:
1. Features:
   a. Operates on 72MHz.
   b. LED indicators for audio level, RF modulation, and RF output power.
   c. Tunable to 57 wide and narrow band channels.
2. Minimum Performance Requirements:
   a. RF Frequency Range: 72.025 – 75.950 MHz.
   b. Transmitter Stability: 50PPM.
   c. Output Power: 100mW.
   d. Signal to Noise: 44dB.
3. Acceptable Products:
   a. Listen Technologies LT-800 72 MHz base unit with power supply, & rack mount kit.
   b. William Sound equivalent.
   c. Approved equal.

D. ALS Antenna:
1. Acceptable Products:

a. LA-122 Antenna kit, provided with RG-8/U cable as required. Gymnasium antenna to be provided with protective plastic cover.
b. William Sound equivalent.
c. Approved equal.

E. Receiver:
1. Features:
2. 17 channel digital receiver.
3. LED indicators.
4. Minimum Performance Requirements:
a. RF Frequency Range: 72.025 – 75.950MHz.
b. Sensitivity: .6uV typical, 1uV maximum for 12dB SINAD.
c. Signal to Noise: 80dB.
5. Acceptable Products:
a. Listen Technologies LR-4200-P1 receiver package with neck loop and ear speaker.
b. William Sound equivalent.
c. Approved equal.

F. Charging Station:
1. Features:
a. 12-unit charging tray.
2. Acceptable Products:
a. Listen Technologies LA-381-01. Provide charging stations to charge all receivers simultaneously.
b. William Sound equivalent.
c. Approved equal.

2.07 PRODUCTION COMMUNICATIONS

A. General
1. Full-duplex, wired communication system with multiple, independent channels, master control station, and various types of remote headset and loudspeaker stations.
2. System Performance Requirements:
3. Frequency Response: 250-8,000 Hz ±3 dB, worst case.
4. Signal-to-Noise Ratio: 60 dB.
5. Headphone Outputs: 200-1,000 ohm load, capable of driving headphones to min. 100 dB SPL.
6. Mic Inputs: Nominal 200 ohm source.
7. Operating Voltage: 24 to 28 VDC, nominal.

B. Production Communication Master Station
1. Features:
a. 2-Channel Headset/Speaker Main Station with Built-in 2-amp Power Supply, Rack Mount (1RU)
b. Two intercom channels with programmable front-panel buttons.
c. High-capacity, fail-safe power supply supports up to 40 beltpacks or 10 speaker stations or 12 headset stations; 3 IFB channels, announce button/relay, channel-linking button and Remote Mic Kill switch.

d. All Channel linking
e. Program input with individual channel level controls
f. Remote Mic Kill switch
g. Stage Announce

2. Acceptable Products:
   a. Clear-Com MS-702. Provide with compatible gooseneck microphone.
   b. Telex equivalent.
   c. Approved equal.

C. Power Supply
1. Acceptable Products:
   a. Clear-Com PK-7.
   b. Telex equivalent.
   c. Approved equal.

D. Prod Comm. Paging Station
1. Wall mounted paging station.
2. Two channel party-line wall station.
3. Features:
   a. Production communications belt-pack receptacle.
   b. Integrated speaker.
4. Acceptable Products:
   a. Clear-Com KB-702.
   b. Telex equivalent.
   c. Approved equal.

E. Prod. Comm. Station with Gooseneck Microphone in Desktop Enclosure
1. Desktop paging station.
2. Two channel party-line.
3. Features:
   a. Production communications belt-pack receptacle.
   b. Integrated speaker.
   c. Provide with angled desktop enclosure and gooseneck microphone.
4. Acceptable Products:
   a. Clear-Com KB-702GM with V-BOX enclosure and gooseneck microphone.
   b. Telex equivalent.
   c. Approved equal.

F. Production Communications Belt-Pack Unit
1. Belt-mounted headset station with mic on/off switch, call switch and indicator, headset receptacle, headset volume control, adjustable side tone, and extension connector for additional belt-pack units.
2. Single Channel Belt Pack
   a. 1-Channel.
   b. Acceptable Products:
      1) Clear-Com RS-701.
      2) Telex equivalent.
      3) Approved equal.
3. Dual-Channel Belt Pack
   a. Acceptable Products:

1) Clear-Com RS-702.
2) Telex equivalent.
3) Approved equal..

G. Prod Comm. Headset
1. Headset with earphone(s), noise-canceling boom microphone and min. 5 ft coiled cord terminated with connector compatible with Belt-Pack Units.
2. Single-Muff Headset
a. Acceptable Products:
1) Clear-Com CC-300 Single Muff.
2) Telex equivalent.
3) Approved equal.
3. Double-Muff Headset:
a. Acceptable Products:
1) Clear-Com CC-400 Double Muff.
2) Telex equivalent.
3) Approved equal.

2.08 VIDEO SOURCE EQUIPMENT

A. Blu-ray Player
1. High-definition DVD player compatible with Blu-ray, standard DVD, and Audio CD discs.
2. Features:
a. Maximum output resolution: 1080p/24.
b. HDMI video output capable of 1080i resolution.
c. Stereo analog output
d. Streaming video via BD Live.
e. HDMI v1.4 compatible.
f. RS-232C control.
g. Hand-held wireless remote control.
3. Acceptable Products:
a. Denon DN-500BD.
b. Sony UBP-X1000ES.
c. Approved equal.

B. BYOD Receiver
1. Video source allowing wireless presentation of laptops, tablets, and smart phones.
2. Features:
a. Fully managed over the network using SNMP.
b. Wireless: Dual band, 802.11n 2x2 Mimo WiFi.
c. OS support: Windows, OSX and Android.
d. Output format: HDMI 1.4 output with Audio.
e. Remotely managed and configured using any web browser.
f. Streaming video support: 4K resolution (3840 x 2160), HD (1920x1080), HD SD (1280x720).
3. Acceptable Products:
a. Mersive Solstice Pod Enterprise Unlimited with mounting accessories, as required.
b. Crestron Airmedia equivalent.

c. Approved equal.

C. HD Video Recorder
1. Features:
a. Video
1) HDMI and HD-SDI video input
2) Resolutions up to 1080p
b. Audio
1) Balanced inputs
2) Recording
3) Codec support: Uncompressed QuickTime, Apple ProRes 422 (HQ) QuickTime, ProRes 422 QuickTime, ProRes 422 (LT) QuickTime, ProRes 422 (Proxy) QuickTime, Avid DNxHD.QuickTime, Avid DNxHD MXF.
4) Timecode in/out.
2. Acceptable Products
a. Black Magic HyperDeck Studio Pro with (2) San Disk Extreme II 480GB solid state plug-in drives and Cable Matters (or equal SATA reader) SATA SSD external reader.
b. Approved Equal

D. PTZ Video Camera
1. Full HD PTZ camera w/ HD-SDI output.
2. Minimum Performance Requirements:
a. Imaging Sensor: 1/2.3 type Full-HD MOS.
b. Lens: Motorized 30x zoom, f1.6 to 4.7.
c. Focus: Auto/Manual switchable.
d. Output Format: HD: 1080/59.94i, 720/59.94p
e. Video Output: SDI.
f. IP video with up to 5 terminals.
g. Control: RS-422 or IP.
h. Rotation Range: Pan: ±175 °, Tilt: +90 ° to –30 °.
3. Acceptable Products:
a. Panasonic AW-HE40S with wall mount hardware, color to be white.
b. Sony SRG-300SE with wall mount hardware, color to be approved by Architect.
c. Approved equal.

2.09 VIDEO ROUTING AND PROCESSING

A. The functional diagram(s) connections shown on the bid documents are based on components manufactured by Extron. This manufacturer was used only as a reference to show the signal flow for the completed audiovisual system. Crestron and AMX are approved equals. The contractor must supply any additional equipment required to provide a complete audiovisual system.

B. 10x8 Digital Video Switcher
1. 10 x 8 digital video matrix switcher with scaler and audio DSP.
2. Features:
a. (6) HDMI, 4 DTP twisted pair, 6 balanced or unbalanced audio inputs, 4 microphone inputs.

b. (4) HDMI, (4) HDMI/TP output, 4 stereo Line audio.
c. EDID minder.
d. Integrated audio digital signal processor.
e. HDMI embed and de-embedding of audio.
f. HDMI to DVI Interface Format Correction: Automatically enables or disables embedded audio and InfoFrames, and sets the correct color space for proper connection to HDMI and DVI displays.
g. Ethernet monitoring and control.
h. RS-232 control.
i. Two independently scaled DTP outputs.

3. Minimum Performance Requirements:
   a. Maximum data rate: 10.2 Gbps (3.4 Gbps per color).
   b. Audio Inputs: Balanced, +4 dBu.
   c. Video: HDCP, Resolutions up to 4096 x 2160 up to 60 Hz or 4K.
   d. Standards: DVI 1.0, HDMI 1.4, HDCP 1.4, CEA-861E.
4. Acceptable Products:
   a. Extron DTP CrossPoint 108 4K.
   b. Approved equal.

C. 8x1 Digital Video Switcher
1. 8 x 1 digital video matrix switcher with scaler and audio DSP.
2. Features:
   a. (6) HDMI, 2 DTP twisted pair, 4 balanced or unbalanced audio inputs.
   b. (1) HDMI/TP output, 4 line audio.
   c. EDID minder.
   d. Integrated audio digital signal processor.
   e. HDMI embed and de-embedding of audio.
   f. Ethernet monitoring and control.
   g. RS-232 control.
3. Minimum Performance Requirements:
   a. Maximum data rate: 18 Gbps (6 Gbps per color).
   b. Audio Inputs: Balanced, +4 dBu.
   c. Video: HDCP, Resolutions up to 4096 x 2160 up to 60 Hz or 4K.
4. Acceptable Products:
   a. Extron IN1808.
   b. Approved equal.

D. HDMI Extender
1. HDMI input jack.
2. Supports computer resolutions up to 4K.
3. Analog 3.5 mm audio input.
4. HDCP compliant.
5. Signal transmission distance (1080p @ 60 Hz): Up to 330' (70 m) using shielded twisted pair (STP) cable or XTP DTP 24 STP cable.
6. Acceptable Products
   a. Extron DTP transmitters as required,
      1) DTP T HWP 4K 232 D, coordinate color with Architect.
      2) DTP T FB 232
      3) DTP T HWP 4K 231 D, coordinate color with Architect.
      4) DTP HDMI 4K 230 Tx
      5) Extron DTP T HWP 4K 331 D, coordinate color with Architect.

6) Extron DTP HDMI 4K 330 Tx.
7) Extron T 3G-SDI 230 D.
8) Approved equal.

E. HDMI Receiver
1. Standalone Digital Video receiver with HDMI output.
2. Supports computer resolutions up to 4K.
3. Bidirectional RS-232 for device control.
4. HDCP and EDID support.
5. Acceptable Products:
a. Extron DTP HDMI 4K 330 Rx.
b. Approved equal.

F. Digital Video Distribution Amplifier
1. Video distribution amplifier with video over twisted pair outputs.
2. Supports computer resolutions up to 4K.
3. Acceptable Products:
a. Extron DTP HD DA4 4K 230
b. Extron DTP HD DA8 4K 230
c. Approved equal

G. SDI to HDMI Converter
1. Features:
a. 3G-SDI, HD-SDI, and SDI to HDMI video scaling.
b. Output: One HDMI.
c. Inputs: One 3G-SDI/HD-SDI/SDI with buffered input loop-through on BNC connectors.
2. Acceptable Products:
a. AJA Hi5-Plus with mounting hardware.
b. Extron DSC 3G-HD A with mounting hardware.
c. Black Magic Mini Converter SDI to HDMI 6G with mounting hardware.
d. Approved equal.

2.10 VIDEO DISPLAYS

A. 22” Monitor
1. Features:
a. VESA mount compatible.
b. 1920 x 1080 resolution.
c. Brightness: 250 cd/m².
d. Connectors: D-Sub, HDMI.
e. Panel: IPS.
2. Acceptable Products:
a. LG Electronics 22MC57HQ-P.
b. Dell P2217H.
c. ViewSonic VA2256-MHD.
d. Approved equal.

B. Video Projector Type 1 (Auditorium & Gymnasium)
1. Wide-screen color LCD video projector.

2. Features:
   a. HDMI, DVI-D, 15 pin D-sub. Discrete Input Selection.
   b. RS-232 remote control and wireless remote control unit for presentation and set-up.
3. Minimum Performance Requirements:
   a. 12,000 ANSI lumens, laser light source, 34dB fan noise.
   b. 15,000:1 contrast ratio.
   c. 1920 x 1200 native panel resolution.
   d. Compatibility with HDTV sources include 480i, 480p, 576i, 576p, 720p, 1080i, 1080p.
   e. Vertical and horizontal lens shift.
   f. Network and RS-232 control ports.
   g. 20,000 hour lamp life.
   h. Gymnasium video projector to be supplied with metal protective cage.
4. Acceptable Products:
   a. Epson L1505U with appropriate zoom lens and mount.
   b. Sony VPL-FHZ120L with appropriate zoom lens and mount.
   c. Panasonic PT-RZ120 with appropriate zoom lens and mount.
   d. Approved equal.

C. Video Projector Type 2
1. Wide-screen color LCD video projector.
2. Features:
   a. HDMI, DVI-D, 15 pin D-sub. Discrete Input Selection.
   b. RS-232 remote control and wireless remote control unit for presentation and set-up.
3. Minimum Performance Requirements:
   a. 1920 x 1200 native panel resolution.
   b. Compatibility with HDTV sources include 480i, 480p, 576i, 576p, 720p, 1080i, 1080p.
   c. Vertical and horizontal lens shift.
   d. Network and RS-232 control ports.
   e. 20,000 hour lamp life.
4. Acceptable Products:
   a. Epson L1300U with appropriate zoom lens, mount, and projector lift.
   b. Panasonic equivalent.
   c. Sony equivalent.
   d. Approved equal.

2.11 CONTROL SYSTEMS

A. Custom Audiovisual Control System Software/Programming:
1. Custom software and programming for AV control system control panels and mainframes to provide control of AV devices and user-friendly control interface.
2. Programming provided by a programming service company engaged in providing such services to third parties as a principal business activity.
3. Product to be developed using AV control system manufacturer's programming tools and to include touch panel layouts, programming source and compiled code, and written documentation. Product to exploit full

graphical capabilities of control system hardware and maximum available feedback of controlled equipment.

4. Control functions as itemized in parts 1 and 3 of the audiovisual specification and on the contract drawings.
5. Product shall conform project standards, including colors, logos, etc.
6. Acceptable Products:
   a. Custom software and documentation from certified in-house programming staff or other sub-contractor as approved according to Division 1. Provide touchpanel layouts as required under Part 1.6 - Submittals.

B. 10” Tabletop Touch Panel
   1. A 10” LCD panel with touch sensitive screen.
   2. Features:
      a. Color touch-panel.
      b. Touchscreen:
         1) Display Type: TFT active matrix color LCD.
         2) Screen Dimensions: 10” diagonal.
         3) Resolution: 1280x800 pixels.
         4) Contrast: 950:1
      c. Communications protocol compatible with respective integrated control system.
      d. Communications:
         1) 10/100 Mbps Ethernet with LAN PoE.
   3. Acceptable Products:
      a. Crestron TSW-1060 with TSW-1060-TTK table top kit, color to be white.
      b. AMX equivalent.
      c. Approved equal.

C. 10” Wall Mounted Touch Panel
   1. A 10” LCD panel with touch sensitive screen.
   2. Features:
      a. Color touch-panel.
      b. Touchscreen:
         1) Display Type: TFT active matrix color LCD.
         2) Screen Dimensions: 10” diagonal.
         3) Resolution: 1280x800 pixels.
         4) Contrast: 950:1
      c. Communications protocol compatible with respective integrated control system.
      d. Communications:
         1) 10/100 Mbps Ethernet with LAN PoE.
   3. Acceptable Products:
      a. Crestron TSW-1060, color to be white.
      b. AMX equivalent.
      c. Approved equal.

D. 7” Wall Mounted Touch Panel
   1. A 7” LCD panel with touch sensitive screen.
   2. Features:

a. Color touch-panel.
b. Touchscreen:
1) Display Type: TFT active matrix color LCD.
2) Screen Dimensions: 7” diagonal.
3) Resolution: 1024x600 pixels.
4) Contrast: 1100:1
c. Communications protocol compatible with respective integrated control system.
d. Communications:
1) 10/100 Mbps Ethernet with LAN PoE.
3. Acceptable Products:
a. Crestron TSW-760, color to be white.
b. AMX equivalent.
c. Approved equal.

E. AV Control System Type 1
1. Fully integrated, programmable system for control of audiovisual system equipment and other motorized, electronic or electrical devices that can be remote controlled.
2. Features:
a. Supports 4-wire control network operation for interfacing with outboard, remote devices including control modules and control panels.
b. Supports 8-wire LAN/Ethernet expansion of the control network.
c. Programmable with high level language via external PC or Apple computer (computer not provided.)
d. Rack mountable.
3. Control Ports:
a. Ethernet: 8-wire RJ-type connector.
b. Relays: (8) normally opened, isolated relays rated at 1A, 30VAC/DC.
c. Input/Output: (8) programmable input and digital outputs.
d. IR/Serial: (8) serial outputs for IR, or serial interface.
e. COM: (3) bidirectional serial ports for RS-232, RS-422 or RS-485 communication.
f. Net: (1) 4-pin male connector for control network.
g. Listing below indicates the basis of the system. The contractor is responsible to review this configuration and supply all programming and any additional components required to make a fully-functional system.
4. Acceptable Products:
a. Crestron 3-Series System with the following Components
1) CP3N control processor with CEN-IO-COM-102 COM port modules.
2) Power supplies, cables, and miscellaneous accessories as required.
b. AMX equivalent.
c. Approved equal.

2.12 NETWORK

A. PoE Switch

1. Features:
    a. Connectors: RJ-45.
    b. Network Standards: IEEE 802.3, 802.3u, 802.3ab, 802.3bc, 802.3af, 802.3at Type 1 and 2.
    c. Data Rate: 10/100/1000Base-T auto-sensing Gigabit Ethernet.
    d. Supports IEEE 802.3at Type 2 PoE+, Class 4 (34.2W) power sourcing from any ports up to the maximum specified power capabilities; Maximum 34.2 Watts per port, 255 Watts total.
2. Acceptable Products:
    a. Crestron CEN-SWPOE-16.
    b. Crestron CEN-SW-POE-5
    c. Cisco equivalent
    d. Approved equal.

B. Audio Network Switch (Dante)
1. Network switch configured and optimized for digital audio.
2. Features:
    a. EtherCON Connectors: 4 front / 4 rear.
    b. LAN ports (1000BASE-T/100BASE-TX/10BASE-T/etherCON connector): 8.
    c. Support functions: Storm control, HOL blocking prevention, Loop detection, ACL, SNMP agents, Link aggregation (IEEE 802.3ad LACP, Static), Spanning tree (STP*, RSTP*, MSTP), Port mirroring, Port shutdown, Link speed down shift, Packet counter, Power saving mode (IEEE802.3az EEE; Disabled in DANTE mode), DHCP client, Logging, Firmware download via TFTP/HTTP, Config file download via TFTP *STP and RSTP are supported via downward compatibility of MSTP.
    d. QoS: 8 egress queues, Policy-based QoS, Remarking (CoS, ToS, DSCP), Scheduling (SP, WRR).
    e. Throughput: 15 Mpps.
3. Acceptable Products:
    a. Yamaha SWP1-8.
    b. Luminex GigaCore 12.
    c. Approved equal.

C. PoE Injector:
1. PoE injector for AV equipment.
2. Features:
    a. Connectors: RJ-45.
    b. 802.3af compliant.
    c. 350 mA maximum @ 48 Volts DC nominal.
3. Acceptable Products:
    a. Crestron PWE-4803RU.
    b. Approved equal.

2.13 RACKS, CARTS, FURNITURE, AND MOUNTS

A. Custom Loudspeaker Rigging Hardware
1. Acceptable Products:
    a. Adaptive Group.

b. Polar Focus.
c. Approved equal.

B. Video Projector Lift (Learning Commons)
1. Motorized video projector lift.
2. Features:
a. Lifting capacity up to 100 lb (45 kg).
b. Motorized lift system with low voltage control.
c. To be provided with ceiling closure panel and trim kit.
d. Ceiling closure to be sized for Learning Commons video projector.
3. Acceptable Products
a. Draper Scissor Lift SL4 with Ceiling Finish Kit (with B closure), Ceiling Access Door, and cabling. Coordinate finish with Architect.
b. Approved equal.

C. Projector Mount
1. UL listed.
2. Weight Capacity 250 lbs.
3. Roll: 5°, Pitch: 20°, Yaw: 360°.
4. Acceptable Products:
a. Legrand/Chief VCMU.
b. Peerless equivalent.
c. Premier equivalent.
d. Approved equal.

D. Equipment Rack General:
1. VERIFY ALL RACK SIZES, TYPES AND FINISHES WITH ARCHITECT OR PROJECT MANAGER BEFORE ORDERING.
2. VERIFY AND COORDINATE ALL BLOCKING AND CLEARANCE REQUIREMENTS BEFORE ORDERING.
3. Equipment rack for standard 19" wide panels. Minimum 16 gauge cold rolled steel construction with louvered sides. Mounting rails with tapped 10-32 threaded holes on EIA spacing. Welded construction.
4. Power for all rack equipment controlled by single master switch.
5. Finish as approved by architect.
6. Vent panels, blank panels and rack mount shelves as shown on drawings.
7. Provide shelves and rack mount hardware as required.
8. Cabling to be supported by lacing bars.

E. Equipment Rack
1. Welded floor rack assembly provided with side panels, lockable rear door and adjustable rear mounting rails, lacing bars and power distribution.
2. Features:
a. Height as indicated or required
b. Power for all rack equipment controlled by single master switch/power sequencer and vertical AC power raceway.
c. Vent panels, blank panels and rack mount shelves as shown on drawings.
d. Provide top panel with temperature controlled fan unit.
3. Provide caster bases and casters where necessary for service access
4. Acceptable Products:

a. Middle Atlantic Products ERK-4425 with rear rack rails, AC power distribution, vented top panel with temperature controlled fan unit, and locking doors, and caster base. Equipment rack for Gymnasium to be ERK-35-20 with accessories as listed above.
b. Lowell equivalent.
c. Atlas Sound equivalent.
d. Approved equal.

F. Equipment Rack (Band, Chorus, Commons)
1. Mobile presentation furniture rack.
2. Features:
a. Bolt-through casters (3”) and internal steel bracing.
b. Locking glass front door is standard.
3. Acceptable Products:
a. Middle Atlantic Products RFR series RFR-1628BR, finish to be approved by Architect.
b. Approved equal.

G. Portable Equipment Rack (for digital stage box)
1. Rack mount case for portable equipment.
2. Acceptable Products:
a. Gator GR Deluxe rack case.
b. SKB Roto Rack case.
c. Pelican Hardigg.
d. Approved equal.

H. Power Conditioner with Lights
1. Rack-mounted sequential power controller with front panel power switch and lights.
2. Features:
a. 8 rear panel outlets, 1 front panel outlet.
b. 15 amp rating with circuit breaker.
c. Noise filtration and surge protection.
3. Acceptable Products:
a. Furman M-8Dx.
b. Middle Atlantic equivalent.
c. SurgeX equivalent.
d. Approved equal.

I. Power Sequencer
1. Rack-mounted sequential power controller providing time-sequenced activation and de-activation of equipment with integrated system power switch.
2. Features:
a. Front panel actuation switch.
b. Alarm interface.
c. Four (minimum) sequencing steps.
d. Front AC outlet.
e. LED status indicator.
f. 20A, 9 outlet.
3. Acceptable Products:

a. Lowell ACR-SEQ6-2009.
b. Middle Atlantic equivalent.
c. SurgeX equivalent.
d. Equivalent.

J. AC Receptacle(s) & Raceway:
1. AC power receptacles for power distribution in equipment racks and cabinets.
2. Features:
a. Compatible with power sequencer for remote control of AC outlet raceway.
b. UL Recognized
c. Multiple circuit strip.
d. 20 Amp power rating.
e. Isolated Ground.
3. Acceptable Products:
a. Middle Atlantic MPR series, as required. Provide with compatible 20A remote controlled power raceway, as required.
b. Lowell POWERSTAC Series, as required. Provide with compatible 20A remote controlled power raceway, as required.
c. Equivalent.

K. Rack Hardware and Panels:
1. Blank Panels:
a. 16-gauge flanged solid steel with black smooth ended for or textured enamel finish.
b. Acceptable Products:
1) Middle Atlantic SB series.
2) Atlas Sound S19 series.
3) Lowell AFP series.
4) Approved equal.
2. Vent Panels:
a. 16-gauge flanged perforated steel with black smooth or textured enamel finish.
b. Acceptable Products:
1) Middle Atlantic VTF series.
2) Atlas Sound SVP19 series.
3) Lowell SVP series.
4) Approved equal.
3. Rack Drawer:
a. Lockable rack mount heavy-duty drawer with spring latch to keep drawer closed.
b. Acceptable Products:
1) Middle Atlantic D series drawers. Size as indicated on drawings.
2) Atlas Sound SD series, size as indicated on contract drawings.
3) Lowell UDE series, size as indicated on contract drawings.
4) Approved equal.
4. Pull Out Rack Shelf:

a. General: Slide out rack-shelf for support of portable equipment, capable of latching in open position.
b. Acceptable Products:
1) Middle Atlantic SS.
2) Lowell SLS.
3) Approved equal.

5. Fixed Rack Shelf:
a. General: Universal rack-shelf for non-rack mount equipment.
b. Acceptable Products:
1) Middle Atlantic U1.
2) Middle Atlantic WUSS15.5
3) Atlas Sound SH1-10.
4) Lowell US-110.
5) Approved equal.

2.14 MISCELLANEOUS

A. 8x4 Stage Box
1. 8 XLR-F microphone inputs.
2. 4 XLR-M line returns.
3. 50’-0” cable.
4. Multipin output connector compatible with multi-pair receptacle input.
5. Acceptable Products:
a. Whirlwind custom 8x4 stage box assembly.
b. Approved equal.

B. Auditorium Video Projector ISO Box
1. Acoustic enclosure for video projector.
2. Acceptable Products:
a. Whisper 100 projector enclosure. Coordinate finish with Architect.
b. Draper equivalent. Coordinate finish with Architect.
c. Approved equal

C. Gymnasium Video Projector Cage
1. Protective metal security cage.
2. Acceptable Products:
a. Legrand/Chief PG4A. Coordinate finish with Architect.
b. Approved equal

2.15 CABLING

A. The following tables list the cabling and connectors that have been approved for the project. This is not an all-inclusive list of the cabling required to complete the installation and fabrication of the audiovisual systems. The contractor may submit cable part numbers, models, and product data for cable that is not listed in the table for approval by the consultant.

Application	Description	Manufacturer	Model No.	Comments
Audio				

Microphone	22 AWG STP	West Penn Belden Liberty	291 8761 22-2C-SH-GRY	Equal
Microphone/Line Level (Plenum)	22 AWG STP	West Penn Belden Liberty	25291 88761, 87761 22-2C-PSH-WHT	Equal
Line Level	20 AWG STP	West Penn Belden Liberty	292 8762 20-2C-SH-GRY	Equal
Intercom	20 AWG STP	West Penn Belden Liberty	292 8762 20-2C-SH-GRY	Equal
Speaker Low Z - Mains and Subwoofers	10 AWG UTP	West Penn	HA210	Equal
Speaker Mains	12 AWG UTP	West Penn Belden Liberty	227 8477 10-2C-GRY	Equal
Speaker Mains (Plenum)	12 AWG UTP	West Penn Extron Liberty	25227 SPK-14 12-2C-P-WHT	Equal
Speaker General Purpose	14 AWG UTP	West Penn Belden Liberty	226 8473 14-2C-GRY	Equal
Speaker General Purpose (Plenum)	14 AWG UTP	West Penn Extron Liberty	25226 SPK-14 Plenum 14-2C-P-WHT	Equal
Speaker General Purpose	16 AWG UTP	West Penn Belden Liberty	225 8471 16-2C-GRY	Equal
Speaker General Purpose (Plenum)	16 AWG UTP	West Penn Extron Liberty	25225 SPK-16 Plenum 16-2C-P-WHT	Equal
Speaker General Purpose	18 AWG UTP	West Penn Belden Liberty	224 8461 18-2C-GRY	Equal
Speaker General Purpose (Plenum)	18 AWG UTP	West Penn Extron Liberty Belden	25224 SPK-18 Plenum 18-wC-P-WHT 89740	Equal
Video				
Hybrid Broadcast	2-Single Mode 9µ Mode Field 125µ Cladding 2-24 AWG UTP 4-20 AWG UTP 1-16 AWG Steel	Gepco Belden	HDC920 7804Ex	Equal

Precision Video	75 Ohm Coax RG-6U	West Penn Belden Alpha	6350 1694A 6458	Equal
Precision Video	75 Ohm Coax RG-59U	West Penn Belden Alpha	819 8241 9102	Equal
Video In Rack	75 Ohm Coax RG-59U	West Penn Belden Alpha	819 8241 9102	Equal
CATV Trunk Lines	75 Ohm Coax RG-11/U	West Penn Belden Liberty	821 9064 RG11-CATV-BLK	Equal
CATV Trunk Lines (Plenum)	75 Ohm Coax RG-11/U	West Penn Liberty	25821 RG11-P-CATV-WHT	Equal
Control and Data				
ALS Antenna	50 Ohm Coax RG-8U	West Penn Belden Liberty	810 7733A RG8-CMP-BLK	Equal
Category 5e	23 AWG UTP	West Penn Belden Liberty	4245 DataTwist 1200 24-4P-L5-EN	Equal
Category 6	23 AWG UTP	West Penn Belden Liberty	4246 DataTwist 2400 24-4P-L6	Equal
Category 6 (Plenum)	24 AWG UTP	Belden Liberty	DataTwist 7882A 24-4P-P-L6	Equal
RS232/422	24 AWG STP	West Penn Belden Black Box	D2404 9925 Series Extended Distance Data Cable	Equal
Crestnet/AXLink	2-18 AWG UTP with 2-22 AWG STP	West Penn Liberty Crestron	77350 Cresnet/AXLINK CRESNET-NP	Equal
Crestron/AXLINK (Plenum)	2-18 AWG UTP with 2-22 AWG STP	Liberty	Cresnet-P AXLINK-P	Equal
Crestron DigitalMedia	4 pr 24AWG STP (shielded)	Crestron	DM-CBL-3G-NP	No Equal
Crestron Fiber Optic DigitalMedia	OM3 Type 50/125um x 4 Multimode Fiber	Crestron	CRESFIBER8G-NP	No Equal
Extron XTP DTP	4 pr 24AWG STP (shielded)	Extron	XTP DTP 24/1000	No Equal
Extron Fiber Optic XTP	OM4 Type 50/125um x2 Multimode Fiber	Extron	OM4 MM P	No Equal
Interface Cables				

HDMI Interface Cable	High-speed Category 2 HDMI Cable w/locking connectors	Crestron Perfect Path	CBL-HD-LOCK 700 Series	Equal
DVI Interface Cable	Dual Link DVI-D	Crestron	CBL-DVI	Equal
Display Port	DisplayPort 1.2 cable 25’	Extron	26-657-25	Equal
25' Microphone, Line, and Intercom	22 AWG STP	Whirlwind Wireworks	WMKPVC-25 C-25	Equal
50' Microphone and Intercom	22 AWG STP	Whirlwind Wireworks	WMKPVC-50 C-50	Equal
25' Monitor Speaker	12 AWG UTP	Whirlwind Pro Co	SK525G12 S12NN-25	Equal
Mulit-pin to Fan-Out	12 Pair Multi-conductor 23 AWG STP	Whirlwind	FM120NRW1IF12	Equal

2.16 APPROVED CONNECTORS

A. Connectors listed below are suggested for use with the specified cabling. The list may not include all of the connectors required to complete the installation of the systems. If a different cable is submitted for approval by the consultant, provide the appropriate connector for the cable as part of the cable submission.

Application	Description	Manufacturer	Model No.	Comments
Audio				
Mic/Line/Intercom	XLR Male Panel Mount	Neutrik Swtichcraft	NC3MX A3M	Equal
Mic/Line/Intercom	XLR Female Panel Mount	Neutrik Switchcraft	NC3FD D3F	Equal
Combo Line	XLR plus ¼” Phone Panel Mount	Neutrik	NCJ5FI-S	Equal
Mic/Line/Intercom	XLR Male Inline Cable	Neutrik Switchcraft	NC3MD A3M	Equal
Mic/Line/Intercom	XLR Female Inline Cable	Neutrik Switchcraft	NC3FD A3F	Equal
Mic/Line Multipin	12 Pair Female Panel Mount	Whirlwind	W1CM	Equal
Mic/Line Multipin	12 Pair Male Inline Cable	Whirlwind	W1IM	Equal
Mic Broadcast	DT-12 Male Inline Cable	Whirlwind	DT12IM	Equal
Mic Broadcast	DT-12 Female Panel Mount	Whirlwind	DT12CF	Equal

Speaker	4-Pole Panel Mount	Neutrik	NL4MP	Equal
Speaker	8-Pole Panel Mount	Neutrik	NL8MPR	Equal
Speaker	4-Pole Inline Cable	Neutrik	NL4FC	Equal
Speaker	8-Pole Inline Cable	Neutrik	NL8FC	Equal
Video				
Hybrid Broadcast	Hybrid Panel Mount Male	Lemo	FMW.3K.93C.TLMC96Z	Equal
Hybrid Broadcast	Hybrid Panel Mount Female	Lemo	PEW.3K.93C.TLCC96Z	Equal
Precision Video	75 Ohm Panel Mount	Neutrik Trompeter Kings	NBB75DFG UBJ28 KC-99-54	Equal
Precision Video	75 Ohm Inline Cable RG-6	Neutrik Trompeter Kings	NBNC75BTU11 UPL2000 Series 2065-10-9	Equal
Precision Video	75 Ohm Inline Cable RG-59	Neutrik Trompeter Kings	NBNC75BLP9 UPL-220-014 or -023 2025-51-9 or 2025-53-9	Equal
Recessed Video Receptacle	75 Ohm Pass-Thru	Canare	BCJ-JRU	Equal
Control and Data				
50 Ohm ALS Ant.	50 Ohm BNC Cable Mount	West Penn	CN-BM53-13	Equal
Ruggedized RJ-45 Cat 5 Receptacle	Ruggedized RJ-45 Panel Mount	Neutrik	NE8FDV-YK-B	Equal
Ruggedized RJ-45 Cat 5 Connector	Ruggedized RJ-45 Inline Cable	Neutrik	NE8MC-1	Equal
Ruggedized RJ-45 Cat 6 Receptacle	Ruggedized RJ-45 Panel Mount	Neutrik	NE8FDY-C6-B	Equal
Ruggedized RJ-45 Cat 6 Connector	Ruggedized RJ-45 Inline Cable	Neutrik	NE8MC6-M0	Equal
Cat 6a Panel Connector	D-shape CAT6A panel connector, shielded, IDC termination, nickel housing	Neutrik	NE8DX-Y6	Equal
Cat 6a Panel Connector	D-shape CAT6A panel connector, shielded, IDC	Neutrik	NE*FDX-Y6-B	Equal

	termination, nickel housing			
RS232 Receptacle	RS232 Panel Mount Male	Amphenol	DB9S-SFJ	Equal
RS232 Receptacle	RS232 Panel Mount Female	Amphenol	DB9S-SMJ	Equal
RS232 Connector	RS232 Inline Cable	Amphenol	DB9S-SFJ or DB9S-SMJ w/metal backshell	Equal
Crestron DM Connector	Shielded RJ45	Crestron	DM-Conn	No Equal
Crestron DM Fiber Optic	SC 50um Fiber Connector	Crestron	CRESFIBER-CONN-SC50UM-12	No Equal

PART 3 - EXECUTION

3.01 GENERAL

A. Equipment will be installed by competent workers at locations shown on the drawings in strict accordance with approved shop drawings and manufacturer's instructions.

B. Equipment is to be firmly held in place, with the exception of portable equipment. This shall include loudspeakers, enclosures, amplifiers, cables, etc. Fastenings and supports adequate to support their loads with a safety factor of five, unless otherwise stated.

C. Take such precautions as necessary to prevent and guard against electro-magnetic and electro-static hum and to install the equipment so as to provide safety for the operator.

D. Protect equipment, including patch panels, connectors, receptacles, racks, consoles, and video projectors, from construction dust and debris until final acceptance of the system.

3.02 SYSTEM DEMONSTRATION AND CHECKOUT (COMMISSIONING)

A. System installation will be certified complete and in fully adjusted working order by contractor. Fill in and submit the Avixa Audiovisual Systems Performance Verification Checklist form prior to scheduling formal commissioning.

B. Fully Adjusted Working Order requires a system to be functional, set for normal operating conditions, and ready to be demonstrated to the AV consultant and end users for training and operation. This includes: termination of field and internal equipment rack cabling, cable labels, equipment labeling, installation of control system code, testing of devices under touch panel or button panel control, remote control panels, external control sensors, IP and network settings, image adjustments, audio mixing, level and equalization adjustments, assistive listening tests, and external sub-system device control. Fully demonstrate spares or pool

equipment supplied under the contract; including auxiliary interconnecting cables and accessories.

C. Confirm test results and data obtained and submitted for review during final commissioning, as requested.

D. Provide as-built drawings, manuals, and configuration software available to consultant during the final testing and commissioning. System Demonstration and Testing does not define the entire scope of proof of performance of the AV systems. Detailed performance requirements are listed in Section 3.13 below.

3.03 LABELS:

A. Except where otherwise specified, label as shown on drawings and as specified each item of rack-mounted equipment, switches, controls, and receptacles.
   1. Connector and Rack Panels: Constructed of engraved and filled anodized aluminum plates. Minimum 1/8" plate thickness. Dry transfer or other types of adhesive labels not acceptable.
   2. Rack-Mounted Equipment: Labels constructed of engraved and filled plastic laminate engraving stock. Designate function and input and output line(s) or loudspeaker(s) served by labeled equipment. Key designations to system functional and patch panel diagrams. Where possible, mount labels on blank panel directly above corresponding component. For modular equipment, provide label on inside of mainframe door identifying type of module for each slot (unless there is only one type) and gain setting as established at final checkout.
   3. Identification Panel: Install panel with 1/8"-high engraved characters on the front of the bank of equipment racks serving each space. Clearly identify the Project, System Installation Contractor, Architect, and System Designer in the following format:

PROJECT:	Owner’s Name Address Room or spaces served Owner’s technical support telephone
SYSTEM DESIGNER:	Acentech Incorporated 33 Moulton Street Cambridge, MA 02138 (617) 499-8000
SYSTEM INSTALLER:	Company Name Address Telephone
PROJECT ARCHITECT:	Company Name Address Telephone

   4. Receptacles: Engrave and fill receptacle label directly on mounting plate as indicated on Contract Drawings.

B. Identify wires and cables at every termination and connection point with the specified cable markers. The contractor is strongly encouraged to use a numbering scheme that identifies cables terminating at patch panel jacks with the patch bay row and jack designation; use A, B, and C suffixes to distinguish multiple cables terminating at the same jack.

C. Identify switches, relays, terminal blocks, etc., with reference numbers keyed to the as-built wiring diagrams.

D. Room numbers appear on the contract documents for reference only. Labels shall reflect the Owner's final room designations.

E. Labels and legends shall be as approved on shop drawings.

F. Cable Markers:
1. High-grade PVC clip-on or permanent-type cable markers with permanent markings, or printed vinyl tape protected by clear shrink tubing or adhesive wrap.
2. Acceptable Products:
a. Wieland Electrovert Type C or Z.
b. Brady B-702 with Alpha FIT-221 series clear tubing.
c. Brady BMP21-PLUS.
d. Dymo RHINO 6000

3.04 MICROPHONE EQUIPMENT

A. General:

B. Excluding wireless microphones, each portable microphone provided with case, stand adapter, and min. 15 ft. cable with attached XLR-type connector.

C. Condenser Gooseneck Microphone:
1. Permanently mount to lectern.
2. Locate to provide typical 6" to 18" working distance between microphone and lecturer's mouth.

D. Subminiature Microphones:
1. Boundary Microphone:
a. Mounted flush in ceilings (electrical boxes) and or furniture tops in locations as indicated.
b. Provide isolation from air handling noise.
c. Install with manufacturer provided isolation hardware.
2. Multi-Element Array Microphone:
a. Install with manufacturer supplied hanging or wall mounting brackets.
3. Hanging Microphone:
a. Suspended below ceilings at elevation shown or a minimum of 6” in locations as indicated.
b. Install with manufacturer provided isolation hardware.

E. FM Wireless Microphone System:

1. Orient antennas as recommended by manufacturer. Locate in positions shown on drawings.
2. Antenna Cables: Use specified low-loss 6/U (75 ohm) or 8/U (50 ohm) cable, impedance as required.
3. Except for transmitter equipment, equipment including preamps and active combiners requiring DC power provided with power supplies or powered by receivers (battery operation is not acceptable).
4. Do not mount antennas or attached preamplifiers directly to any metal structure. Mount at least 3 ft. from any large metal object.
5. Dual-Antenna Phase/Diversity System (Telex, Shure, Sennheiser): Use 2 antennas, both vertically oriented, observe manufacturer's minimum required spacing.

F. Digital Wireless Microphone System:
1. Install remote antennas min. ½ wavelength in distance from each other (UHF frequencies).
2. Antenna Cables: Use specified low-loss 6/U (75 ohm) or 8/U (50 ohm) cable, impedance as required by manufacturer.
3. For systems with Digital Transceivers (access point), mount with face aimed at desired coverage area.
4. Do not obstruct the microphone/transceiver line of site.
5. Observe minimum separation between mounted access point/transceivers.
6. Use RF spectrum scanning utility where required for RFI (Radio Frequency Interference) conflicts.

3.05 AMPLIFIERS AND DIGITAL AUDIO SIGNAL PROCESSORS

A. Gain Control Security:
1. Amplifiers and Signal Processing Equipment: Power amplifiers and signal processing equipment with front panel controls or power switches which are to be permanently adjusted (not normally adjusted by the operator), such as equalizers, distribution amplifiers, limiters, and audio delays, shall be furnished with lockout of front-panel controls, security panels, or be mounted on subpanel behind blank panels. Provide transparent plastic panels for viewing of indicators such as meters or LED indicators.

B. Audio DSP and Surround Processing:
1. Install all equipment to manufacture specifications and industry standards.
2. Adjust the system gain and equalization to meet specifications. Adjust equalization curves as required for speech and program audio playback.
3. Record and store all DSP configuration files.
4. Test all functions of each piece of audio DSP equipment, including front panel and remote controlled functions.

3.06 LOUDSPEAKER EQUIPMENT

A. Loudspeaker Arrays:
1. Loudspeaker rigging and structural supports will be provided by GC/Architect. AV contractor is to provide any necessary hardware required to interface the loudspeaker array with the loudspeaker rigging.

2. Carefully inspect the site to verify that no obstructions, such as beams, panels, large framing members, etc. exist between high-frequency horns and any seating area covered by the horns. Immediately notify Architect of any such obstructions.
3. Provide and install safety cable to secure all loudspeaker components and mountings.
4. Provide framework as required to properly support and align the loudspeaker arrays in the indicated locations. Provide shop drawings of proposed structure for review prior to fabrication. Obtain the stamp of a structural engineer registered in the same state as the construction site on shop drawings which depict loudspeaker cluster structure, framework and support system(s).
5. Paint all components and provide cloth grilles for loudspeaker enclosures as required by Architect.

B. Ceiling-Mounted Loudspeaker Enclosures and Grilles:
1. Ceiling Enclosures: Enclosures supported directly from ceiling structure in an approved manner. Support directly by acoustical ceiling tile is NOT ACCEPTABLE.
2. Flush and Surface-Mounted Ceiling Enclosures: Provide enclosures where indicated on drawings.
3. Surface-Mounted Wall Enclosure: Located as indicated on drawings. Coordinate enclosure colors with the Architect.

3.07 ASSISTIVE LISTENING SYSTEM

A. RF Assistive Listening System:
1. Orient external coaxial dipole antenna ground plane in proper direction.
2. Test all receivers with program material for noticeable dropouts in signal.
3. Test all bodypack receiver accessory headphones and neckloops.
4. Provide field strength data and commissioning report to AV consultant.

3.08 VIDEO EQUIPMENT

A. Video Projectors:
1. Verifications:
   a. Verify lens selection, locations, and elevations shown on drawings using manufacturer's throw distance and elevation formulas for specified projector model.
2. Submittals:
   a. Provide plan and section drawings verifying image size and format, lens-to-screen distances and mounting methods.
   b. Provide detailed drawings of custom-fabricated or stock mounts and hardware.
   c. Provide detailed drawings of millwork or finish items required for specified screen dimensions.
   d. Where mirrors are required, provide detailed drawings of mounting angles, reflection rays, support structures and hardware.
   e. Where projector mounts or motorized lifts are installed by others, provide drawings to guide installer indicating installation positions allowing optimal projector performance.

3. Mounting:
   a. Install projector mount and suspend projector at location and elevation indicated on approved shop drawings.
   b. Projector mounts and motorized lifts must meet all applicable safety and code requirements for ceiling mounted equipment.
   c. Fixed projector mounts must be rigid and completely free of sway or rotation deviation.
   d. Projector support pipes shall be only fixed-length pipes as required—do not use adjustable-length pipes.
   e. For ceiling-mounted installations where screen surfaces are vertical, level projector at 0° front-to-back and side-to-side.
   f. Position projector with lens centered on screen centerline in plan unless projector is provided with horizontal lens shift capability. Do not employ vertical or horizontal electronic keystone correction unless specifically authorized to do so.
   g. Wherever possible, minimize hardware and cables visible from audience seating and presenter area viewpoints.
   h. Paint exposed mounting hardware to match room interior or as instructed by Architect.
   i. Where structural mounts or millwork openings are provided by others, verify correct positioning and dimensions before mounting projector. Provide written notification to the Owner or Architect of any discrepancies in mount positioning or stability deficiencies before projector installation.
   j. Where rear projection screen millwork is provided by others, provide written notification to the Owner or Architect of any discrepancies in opening dimensions before screen or projector installation.
   k. Provide all necessary projector brackets, fittings, pipes, miscellaneous hardware and wireways.
   l. Run cabling from video projector box to projector within projector support pipe.
   m. Provide approved security cable for video projectors to accept padlock provided by owner.
   n. Confirm that the lift and or projector is isolated from building or external vibrations.
   o. When using an external box for projector components make sure the box is adequately ventilated and has enough AC power receptacles.
   p. Confirm that the projector fan noise is within the manufacturer's specification.

B. Video Display Panels:
   1. Submittals:
      a. Provide elevation drawings showing location of video displays for approval. Where display is part of a larger graphic display, verify exact location of display with Architect.
   2. Mounting:
      a. Install display mount and display at location and elevation indicated on approved shop drawings.
      b. For wall –mounted displays, provide mount to support display from blocking, if provided, or from wall studs. If a recessed box is provided

behind display for power outlets and electronic accessories, provide mount that does not obstruct access to box.

c. Wherever possible, minimize hardware and cables visible from audience seating and presenter area viewpoints.

d. Where display is mounted in an architectural recess, verify that sufficient clearance (2” minimum) is provided for ventilation airflow.

e. Provide display mounts with security provisions to accept owner-provided padlocks.

C. Pan/Tilt Video Cameras:

1. Submittals:

a. Provide elevation drawings showing location of cameras for approval.

2. Mounting:

a. Install camera at location and elevation indicated on approved shop drawings using approved wall mount or ceiling mount bracket.

b. Maintain clearance for pan/tilt operational limits.

c. Identify and correct with the architect any light source that may interfere with the camera iris.

3. Control:

a. Program control system to provide presets for principal views for each camera and provide means for users to modify presets.

D. Digital Media Transmission and Switching Systems:

1. Extended Display Identification Data (EDID):

a. Do not operate digital media transmission/switching equipment in “automatic EDID” mode, unless equipment provided has no other option.

b. Do not include resolutions in the EDID table that cannot be handled by display(s).

c. For systems where laptop computers will be used in “mirroring” mode, ensure that as many possible common resolutions are included in the EDID table without violating provision of preceding paragraph.

d. For inputs where the source is a fixed device (i.e. a fixed part of the system) create the EDID table with a single entry, again without violating provision of preceding paragraph but one.

2. HDCP Implementation:

a. For systems containing a non-HDCP-compliant display device, such as a class capture appliance or videoconference CODEC, and where switching equipment supports the capability, dynamically configure input devices for portable equipment such as laptops to report to the equipment as non-HDCP devices when the non-compliant device is in use.

3.09 CONTROL EQUIPMENT

A. Audiovisual Control System:

1. Do not mount wireless receiver gateways or antennas near large metal objects.

2. Carefully coordinate with manufacturer and with Architect the dimensions and mounting conditions of all items.

3. Provide all required cable, relays, and miscellaneous hardware to interface the audiovisual control system with controlled equipment.
4. Install all components so as to use the maximum amount of any tally signals provided by the controlled equipment, including lighting dimmer systems and video playback and recording devices.
5. Mount infrared LED emitter probes to face of controlled equipment using thin layer of clear silicone caulk. Position probe to provide control of device while continuing to allow use of infrared control supplied with equipment. Secure probe cables to prevent probe from being accidentally pulled from equipment during normal system operation.

B. Ethernet/IP/Local Area Network Accessibility and Control:
1. Coordinate Ethernet connectivity and IP addressing of control devices with Electrical Contractor and the Communications/Technology management of the facility. Owner will provide all required IP addresses to AV contractor.
2. Provide owner with remote control and management software interfacing via Local Area Network access from PC to any IP addressed control devices.
3. Coordinate with end-user and Communication/Technology management of the facility, on POP-3 email notification of system service issues where desired and /or where possible. Co-ordinate with Owner and Communications/Technology management of the facility on POP-3 email of service or security issues in case of failure or disconnection of any bi-directional (e.g. RS-232 or Cresnet/AXLINK) device.
4. Verify requirements of system control via IP with or Owner and Consultant.

C. Local Area Network Management Programming:
1. General:
   a. Verify requirements of room management/scheduling via IP with or Owner and Consultant.
2. Room AV system control:
   a. Use included software and Ethernet connectivity hardware of control systems.
   b. Program remote site portal to replicate appearance and function of control touch panel.
   c. Control program can be launched locally from designated AV technician computers as stand-alone “.exe” Windows-based executable file.
3. Remote System Status Monitoring and Management Programming:
   a. Use included software and Ethernet connectivity hardware of control systems.
   b. Provide system-wide and room-specific monitoring and management including:
      1) Room activity and system shut-down scheduling.
      2) Multiple user level password settings, including password change and lock-out of certain user passwords at certain times.

D. Audiovisual Control System Programming:
1. All programming to be performed by programmer certified by the manufacturer of the AV control system equipment provided.
2. Program system or instruct AV Control System Manufacturer to program system as instructed by the AV Consultant and the Owner, and as indicated

on the drawings so that all devices are controlled in a logical manner, and to take full benefit of the capabilities of the Control System.

3. Submit for approval changes to programming or control panels required by actual conditions (e.g. number of dimming system presets).
4. Refine and adjust, as required, programming to operate in a logical and consistent fashion. Make revisions to program as directed by the AV Consultant at checkout to correct operational inconsistencies or to properly control devices.
5. Ascertain that the system is optimally programmed for smooth transitions between media uses and for minimal wear-and-tear on equipment and audiovisual media.
6. Verify that video playback device transports, etc., are stopped when another input source is selected, unless playback device is routed to a different destination from the selected source.
7. Wherever possible, utilize status feedback of source equipment, dimming systems, etc., to indicate to the control system and user the actual operating mode of the equipment. When feedback is not available (e.g. consumer playback equipment) program control system to issue commands as required to minimize status reporting errors.
8. Provide color electronic drawing files of screen layouts of touchscreen control panels for approval prior to system programming.
9. Distinguish between primary and secondary control buttons by intensity or color. If available, use “3D” buttons to indicate button activation as visually “depressed”. Avoid excessive use of primary or other bold colors.

E. Color Video Touch-Screen Control Panels:
1. Submit panel graphics (including text, buttons, colors, images, backgrounds etc.), as well as panel flips, sub-panels and overall screen logic flow to the Owner and Consultant for review and approval.
2. Use Crestron Studio® or AMX TP Design 5 (G5 panel support) for panel logic programming and design; make software files available directly to the end user upon request, free of charge.
3. Join numbers (other than those reserved for panel logic), hardware programming and all other installation requirements including programming software and computers are the responsibility of the installing contractor.
4. Any adjustments, revisions, modifications, etc. to the panel graphics and control system required for complete operation are the responsibility of the installing contractor.

F. Lectern Control Panel:
1. Coordinate the touch panel cut-out with furniture manufacturer.
2. Provide furniture manufacturer with mounting template.
3. Verify size and mounting conditions with Architect.

G. Master and Portable Control Panels:
1. Install local control panels in associated backboxes, as required.
2. Verify size and mounting conditions with Architect.
3. Confirm operation of portable wireless panels, WAP access points, and Gateways.

H. Control System Functions:

1. Following are general descriptions and guidelines for control system panel functions and layouts:
   a. Turn system power on/off.
   b. Input Source selection.
   c. Separate speech and program audio volume controls. Preset microphone and audio playback levels on startup.
   d. Recovery from power outage.
   e. Control digital signal processors to provide system presets indicated in this specification or on the AV drawings or others as required.
   f. AC power failure and switchover to UPS.
   g. Others as identified elsewhere in the Contract Documents or required.
   h. After system shut-down, system will restart with default settings restored.
2. Following are specific descriptions and guidelines for control system panel functions and layouts:
   a. Volume Control (provide separate microphone and program audio volume controls where applicable).
   b. Projection screen up/down.
   c. Transport controls for all applicable AV sources.
   d. Select which video input is actively displaying and playing audio through the AV system.
   e. Others as identified elsewhere in the Contract Documents or required.
3. Where applicable, configure the audiovisual control system(s) with the following operation(s):
   a. Control system shall communicate with video display devices (particularly video projectors) during start-up and shut-down. Feedback shall be provided on the control panel indicating when the projector is cooling down, and inform the user that the projector cannot be restarted until cool-down is complete.
4. Interface with Fire Alarm System: The audiovisual system shall connect to the FAS as identified on the drawings. Systems shall be muted when triggered by the FAS.

3.10 NETWORKED AV & SECURITY

A. All equipment to be configured to prevent unauthorized users from access to the systems and network and prevent disclosure of confidential information.

B. Default passwords of internet connected audiovisual equipment are readily known and can be used as a means to access network equipment by unauthorized users. AV networked devices may include any device with a wireless or wired Ethernet port.
   1. Assign role based access control with different levels of access and permissions for each user type:
      a. Admin – Ability to make changes to network, security configurations, and user accounts.
      b. AV Configuration – Ability to make changes to AV Parameters.
      c. System User – System operation only.
      d. Others as required by the Owner.

2. Change all passwords from default values to project specific passwords. Follow industry recommended password strength standards when choosing new passwords.
3. Provide new passwords to the Owner.
4. Provide instructions to change passwords.

C. AV Network Switches:
1. Do not connect unauthorized AV network switches to the Owner's LAN.
2. Provide logical separation of AV and IT networks through hardware and VLAN's.
3. Disable unoccupied ports and services on managed switches.

3.11 PROJECTION SCREENS

A. General: Install projection screens at locations indicated to comply with screen manufacturer's written instructions.

B. Install front-projection screens with screen cases in position and relationship to adjoining construction indicated. Securely anchor to supporting substrate in a manner that produces a smoothly operating screen with vertical edges plumb and viewing surface flat when screen is lowered.
1. Test electrically operated units to verify that screen, controls, limit switches, closure, and other operating components are in optimum functioning condition.

3.12 RACKS, CABLES, CONNECTORS, AND MISCELLANEOUS EQUIPMENT

A. Wiring and Interconnections:
1. General:
a. Exercise care in wiring to avoid damage to cables and equipment.
b. Make all joints and connections with rosin-core solder or approved mechanical connectors, except mechanical connectors are NOT acceptable on microphone lines. Connections to transformer leads for distributed loudspeakers may be made using properly-sized wire nuts or nylon-insulated pigtail crimp connectors such as Waldom CE series. Wire nuts are not acceptable except at individual loudspeakers.
c. All connections to screw-type terminals shall be made using spade lugs. Bare or tinned wire is not acceptable.
d. All connections to lugless compression-type screw terminals shall be made using bare wire only. Do not tin wire.
e. All wiring executed in strict adherence to standard broadcast practices. This includes:
1) Dress cables in conveniently sized bundles, combed into parallel runs, either laced or banded with sufficient plastic ties.
2) For equipment mounted on glides, or otherwise requiring servicing from the front of the rack incorporate a cable "service loop" of sufficient length to permit the equipment to be pulled forward from the rack for servicing.

3) Support cables and bundles with sufficient plastic ties and support bars to ensure that no strain is placed on any connections or connectors.
4) Organize cables and cable bundles behind patch bays to permit easy access to the patch panels to add or remove cables.
5) Place cable markers 3"-5" back from video connectors to permit easy viewing. Do not bind markers into cable bundles.

f. All audio signal lines carried by twisted-pair cable and switched with two poles per line unless noted otherwise. Do not tie one side of audio line to other audio lines.

2. Grounding:
   a. Ground equipment, racks, and audio line shields to independent audio system ground ONLY as shown on drawings. If not shown on drawings, ground case of power striplines in equipment racks to the racks and directly to isolated ground buss in the power panel or to power system ground at the building AC service entry only.
   b. Ground all conduits ONLY to power system ground. Insulate all conduits and electrical boxes from sound system, including equipment racks and audio system ground.
   c. Insulate all conductors in conduit, including shields, from the conduit, back boxes, and from each other for the entire conduit length.
   d. Equipment Racks:
   e. Install equipment in racks to permit access to all equipment for service. Transformers, relays, terminal blocks, etc., mounted in rear of racks behind other equipment shall not prevent access to equipment connections or shall be mounted on hinged panels to permit access.
   f. Wire all racks completely in the shop. No internal rack wiring to be done on the job site.
   g. Install equipment in racks with ventilating panels as required to provide adequate ventilation and according to equipment manufacturer's recommendations.
   h. Connect all microphone, DC control, and line level cables to equipment racks via specified audio terminal blocks. External lines to patch bay terminated directly on patch bay terminal blocks.
   i. Connect loudspeaker lines with equipment racks via specified terminal blocks. Use spade lugs if barrier strips are used. Do not buss commons together. Do not ground.
   j. No signal or control lines shall leave a rack without connecting via terminal blocks.
   k. Provide unused panel space with blank or ventilating panels.
   l. Locate patch panels at least 30" above floor.
   m. Locate free-standing racks as indicated and to provide access to rear without moving racks.
   n. For permanently located racks containing equipment on glides, with desk/control surfaces, or which may be unsteady from cantilevered devices or personnel, bolt all racks to the concrete floor slab (through the access flooring if necessary).
   o. Bolt adjacent racks together on at least 3 locations along both the front and rear edges.

p. Equip racks not bolted to the floor because of service access with "Anti-tip" bases, casters and brake.

3. Wall-Mount Equipment Racks:
   a. Drywall Partitions: Before installation of drywall material, install blocking or other bracing required to support weight of equipment rack.
   b. If internal wall bracing is not provided before wall is closed in, install ¾” plywood mounting plate secured with drywall screws to at least three separate studs. Size of plate and number of mounting screws as required to support weight of rack. Paint plywood to match wall finish. Strut channel hardware support frame attached to structure is also acceptable.
4. Conduit:
   a. Run lines in metallic conduit or wireways unless otherwise indicated. Run microphone level, line level, loudspeaker level, and DC control wiring each in separate conduit.
   b. Do not locate AC power lines in conduit containing network, audio or video lines.
   c. Do not splice lines in conduit.
5. Exposed Cables:
   a. Line level or mic level lines exposed above countertops (such as those lines serving mixing consoles, program source equipment, etc.) shall be rubber-jacketed, AWG #20 two conductor with braided shield such as Belden 8412 or equivalent. Plastic or vinyl jacketed cables are not acceptable.
6. Receptacles:
   a. Wall-mounted receptacles in metal boxes at building standard receptacle height unless otherwise indicated.
   b. Floor-mounted receptacles in flush floor boxes with flush lids.
   c. Catwalk-mounted receptacles in metal boxes mounted on catwalk hangers at building standard receptacle height.
7. Balanced Receptacles:
   a. Attach "XLR" type connectors to mounting plates with machine screws unless using single-hole mounting types with threaded sleeve and mounting index to prevent rotation.
8. Unbalanced Receptacles:
   a. Install 1/4" phone jacks to mounting plates with insulating washer and sleeve to electrically isolate the jack from the electrical box and conduit.
   b. Install isolation/balancing transformers in electrical boxes or wireways adjacent to each unbalanced receptacle as indicated.
   c. Wire input receptacles to short the line except with connector inserted.
9. Video Receptacles: Install feed-through BNC receptacles to mounting plates with insulating washer and sleeve to electrically isolate the receptacle from the electrical box and conduit.
10. Loudspeaker Wiring:
    a. Note that Functional Diagrams or Conduit Drawings indicate required home runs for loudspeakers and loudspeaker zones. Home run requirements depend on line power loss as well as functional considerations and shall be strictly adhered to.

b. Loudspeaker lines above ceilings installed using specified UL listed plenum-rated cable. Lines installed as high as possible, directly to undersides of floor or to roof decks above, using strain reliefs, cable ties, or other approved method to attach lines securely and neatly to building structure. Lines installed loosely or otherwise on top of ceiling tiles, ductwork, etc., are NOT ACCEPTABLE.
c. Floor-to-floor lines installed using specified UL listed plenum-rated cable. Attach lines securely and neatly to building structure using Owner-approved method.

11. Fiber Optic Cables:
a. Terminate fiber optic strands with connectors compatible with connectors on equipment and with fiber optic cables provided.
b. Use of compatible quick-connection system is recommended (e.g. Corning UniCam® Pretium Installation Tool Kit for Corning fiber cable; Belden FiberExpress System or West Penn Wire Fiber products with Optimax Installation Tool Kit).
c. Neatly coil surplus fiber cable using bend radius larger than manufacturer’s minimum bend radius and secure to rack to prevent crimping or damage to cable, or provide rack-mount fiber management.

3.13 SYSTEM PERFORMANCE TESTS AND ADJUSTMENTS

A. Test equipment to verify conformance with manufacturer's performance specifications and with this specification.
1. Verify systems meet the requirements identified in this section or otherwise within the contract.
2. Adjust systems as required to conform to testing requirements for any failed tests.
3. Provide results of final, re-calibrated system testing to Architect and AV Consultant for review and approval prior to scheduling of commissioning testing by AV Consultant or any user training provided to Owner.

B. Audio Systems:
1. Absolute Impedance:
a. Set any loudspeaker level controls at zero attenuation. Measure absolute impedance value of each loudspeaker line at 250, l000, and 4000 Hz, without amplifier connected but with loudspeakers connected. Impedance shall be at least 90% of rated load impedance of respective amplifier. Check resistance of lines to loudspeaker and microphone receptacles, with receptacles open and short circuited.
2. Hum and Noise Level:
a. Adjust gain controls for optimum signal-to-noise ratio and full amplifier output with -55 dBm level at a microphone input and 0 dBm at line-level input.
b. Without changing gain, terminate microphone and line-level inputs with shielded resistors of l50 and 600 ohms, respectively.
c. Measure overall hum and noise level at each power amplifier output for each input channel. Level shall be at least 80 dB below rated power output of amplifier over a bandwidth of 20-20,000 Hz.
3. Electrical Distortion:

a. Load power amplifiers with resistors matching nominal impedance of output terminals used in system in place of actual loudspeaker loads.
b. Adjust gain controls as for hum and noise level tests.
c. Apply 1000 Hz size-wave signal from an oscillator having less than 0.l% total harmonic distortion to each microphone and line-level input at level required to produce measured full amplifier output.
d. Distortion shall measure less than 0.l%.

4. Parasitic Oscillation and RF Pickup:
   a. Set up system for each specified mode of operation.
   b. Use 50 - 100 MHz bandwidth oscilloscope and loudspeaker monitoring.
   c. Check to ensure that system is free of spurious oscillation and RF pickup in the absence of any input signal and also with system driven momentarily to full output at l60 Hz.
5. Buzzes, Rattles, Distortion:
   a. Apply a high-quality music signal to the system. Adjust the loudness for frequent peaks at its specified maximum sound pressure level.
   b. Apply sine-wave sweep from 50-50,000 Hz at 6 dB below full amplifier power.
   c. In both cases, listen carefully for buzzes, rattles, and objectionable distortion.
   d. Correct causes of such defects. If cause is outside the system, promptly notify the Architect and his Consultant, indicating cause and suggested corrective procedures.
6. Level Balance: Adjust level controls for items of similar equipment for identical measured voltage gain.
7. Measure system acoustical performance using a sound level meter set for "slow" meter damping except as otherwise noted, and flat response with random incidence at a height of 4 to 5 feet. Interior finishes and furnishings shall be in place, and system gain shall be adjusted to provide levels of 70 to 80 dB and at least 10 dB above background noise at the measuring locations for these tests, except as otherwise noted. Include the following tests and adjustments:
   a. Frequency Response:
      1) Measure loudspeaker frequency response with control equalization set for flat response, using 1/3-octave bands of filtered pink noise centered on ANSI preferred frequencies, or broadband calibrated pink noise measured in 1/3-octave bands using a calibrated real-time analyzer.
      2) Adjust equalization to provide average system response within ± 3 dB of a response (0 dB) which is flat from 63-2500 Hz and slopes uniformly from 0 dB at 2500 Hz to -5 dB at 10,000 Hz.
   b. Uniformity of Coverage:
      1) Use 4000 Hz octave band of random noise as test signal output to loudspeakers.
      2) Lateral Uniformity: ± 2 dB at positions equidistant from front of hall.
      3) Front-to-Back Uniformity: Decreasing linearly within ± 2 dB from 0 dB at front of hall to -6 dB at rear as measured on the hall center line.
   c. Maximum Output Level:

1) Measure with standard "fast" meter damping.
2) Loudspeaker Cluster: Capable of providing 95 dB SPL in the audience area on axis of any high-frequency horn and employing wideband recorded music as a test signal.
3) Distributed Loudspeaker Systems: Capable of providing 95 dB SPL on axis of any loudspeaker and using wideband recorded music as a test signal.

d. Speaker Polarity:
1) Using a NTI Minirator MR-PRO, use the generator Sawtooth (WAV) pattern to check the polarity of each program loudspeaker. When the speaker polarity is normal the measuring meeting will display POSITIVE.
2) Correct the polarity of any speaker out of phase.
3) Record results.

C. Video Systems: Test the video system following the approved Proof-of-Performance Test Plan to verify that it meets these minimum performance requirements. .
1. Video Standards:
a. Frequency Response: ± 0.5 dB, 60 to 4.l8 MHz.
b. Crosstalk: -40 dB at 3.58 MHz.
c. S/N Ratio: 45 dB, DC to 4.l8 MHz, unweighted, peak to RMS.
d. Hum: <10 mV peak to peak.
e. Line and Field Tilt: 2% with 60 Hz square wave.
f. Differential Gain: 1% at 3.58 MHz, l0-90% APL.
g. Differential Phase: ± 1° at 3.58 MHz, l0-90% APL.
h. Envelope Delay: ± 0.l microseconds, 0.2 to 2.1 MHz; ± 0.05 microseconds at 3.58 MHz.
i. Color Production: Primary and Complementary Colors (R, G, B, Cy, Yl, Mg) at 75% saturation within inner 50% of the inner boxes (± 2.5°) when viewed on vectorscope.
j. Signal Levels: 1 V p-p, ± l IRE, at 100% peak white color bar.
2. Audio Standards:
a. Frequency Response: ± l dB, 30-l5, 000 Hz.
b. Hum and Noise: -80 dBu, 30-l5,000 Hz, unweighted.
c. Distortion: 0.25% THD, 30-l5,000 Hz.
d. Signal Levels: +4dBu.

D. Video Display Systems: Calibrate each video display system as follows:
1. For projected displays align the image with the black borders of the screen:
a. If the display uses a variety of aspect ratios use the zoom lens to align the image with the black borders of the screen. If the image does not fill the screen (e.g., a 16:9 screen with 4:3 image) then align top and bottom of image with black border of screen.
2. Allow projector or flat panel display to warm up for a minimum of 30 minutes.
3. Turn off video enhancement circuitry options including image overscan.
4. Set factory color temperature to warm, D65, or other setting to achieve closest approximation to 6500°K color temperature. Set sharpness control to minimum.
5. Adjust black level and video gain:

a. Reduce ambient light to less than 2 foot-candles of ambient light on screen.
b. Using the PLUGE (Picture Lineup Generating Equipment) pattern from the signal generator, adjust the brightness (brightness control on most displays) until the “blacker-than-black” bar is visible on the screen and then decrease brightness until the bar just disappears.
c. Using the grayscale pattern from the signal generator, adjust the contrast control so that the highest grayscale transition disappears and then decrease contrast to make the transition just visible.
d. Repeat steps b and c as required for stabile results. Record control settings.

6. Adjust color level or gain:
   a. Display SMPTE color bar test pattern. Shut off red and green channels on display or use a blue filter to observe the display.
   b. Adjust color and tint controls for optimum blue balance.
   c. With only red channel operating or with red filter check red balance. Repeat for green channel. If red and/or green balance is significantly out of balance, make minor changes to color and tint controls to achieve best compromise for color control settings.
   d. Record control settings.
7. Adjust sharpness:
   a. Using the S802B or similar pattern, adjust sharpness control for maximum sharpness without ringing (duplicate lines).
   b. Record control setting.
8. Brightness, Uniformity, and Contrast Ratio:
   a. Using the ANSI 9-zone pattern and a spot photometer, measure screen brightness in each zone. Calculate screen brightness as the average of the nine zones and uniformity as the maximum variation from the average.
   b. For a projected image, use the ANSI 16-zone checkerboard test pattern and viewing locations measure the contrast ratio of representative white squares vs. adjacent black squares. Repeat contrast measurement with room lighting at representative viewing level (typically 7fc in seating area).
   c. Record measurements.

E. Digital Video Systems: Provide the following information for systems employing HDMI and/or digital media signals:
   1. The video timing (e.g. 1080p 30 fps Deep Color or 1366x768 30 Hz), HDCP use, and audio format of each non-portable digital source when operating.
   2. The video timings and supported audio formats for each connected sink.
   3. The video timings and supported audio formats presented in the EDID of sinks to each source – indicate the preferred video timing.
   4. The length of cable used on HDMI or shielded twisted pair cables used for AV distribution.
   5. The data rate supported by each shielded twisted pair cable used for AV distribution.

F. Video Projectors:
   1. Provide written verification of completion of the above procedures.

2. After completion of projector set-up, record the following items for inclusion in pre-acceptance test reports:
   a. Current lamp life hours shown on projector (include date), if lamps are used as a light source.
   b. Provide security service code if required by owner.
   c. Set-up software version number.
   d. Projector, input modules, and decoder card serial numbers for each system.
   e. Date of manufacture.
   f. Date of installation.
   g. List of supplied accessories (remotes, lens caps, tools, cables, backup discs, owner's manuals).

G. Remote Control Systems: Test each function of each control station or touch panel to verify proper operation and that each illuminated button and indicator operates properly when the associated function is selected.

H. Test Reports and Certificates: Submit results of tests and adjustments conducted above and certification that the installation is complete and ready for checkout as specified under SUBMITTALS in PART I - GENERAL.

3.14 FINAL ADJUSTMENTS AND ACCEPTANCE TESTS

A. Upon approval of the contractor's test report, and at a time set by the Architect, assist the Consultant(s) in performing final system adjustments and acceptance tests. Provide labor, material, tools, and measurement equipment necessary for these tests and adjustments, including the test equipment and material specified in Article 1.1, except as otherwise specified.

B. Supply sufficient representatives who are thoroughly familiar with details of the system to assist in the performance of these tests, and include the field supervisor in charge during the course of the installation work.

C. Budget 8 working hours for the performance of these tests and adjustments. If final acceptance is delayed beyond this period because of installation not in accordance with these specifications, pay for additional time and expenses of Consultant(s) during any resultant extension of the acceptance testing period.

D. Acceptance tests may include speech intelligibility surveys and subjective evaluations by observers listening at various positions under various operating conditions, using speech, music, and live or recorded effects material.

E. Measurement of frequency response, distortion, noise, or other characteristics may be performed on any item or group of items deemed necessary to determine conformity with specifications.

F. Adjustments: Adjust the system as instructed by the Consultant. Adjustments may be required to any portion of the system including:
   1. High-frequency horn aiming.
   2. Equalization and level balance.

3. Timing and functioning of the audiovisual control system.
4. Video projector alignment, contrast, brightness, and color content.

END OF SECTION

DO NOT REMOVE
THIS PAGE INTENTIONALLY LEFT BLANK

Section 28 00 00

SECURITY SYSTEM
(TRADE CONTRACT REQUIRED AS PART OF SECTION 26 00 01)

PART 1 – GENERAL 1

1.1 GENERAL PROVISIONS 1
1.2 RELATED DOCUMENTS 1
1.3 DESCRIPTION OF WORK 1
1.4 RELATED SECTIONS 3
1.5 COMMISSIONING 3
1.6 REFERENCES 4
1.7 SYSTEM DESCRIPTION 4
1.8 PERFORMANCE REQUIREMENTS 4
1.9 QUALIFICATIONS 4
1.10 INTERPRETATION OF DRAWINGS 5
1.11 MATERIAL AND EQUIPMENT STANDARDS 5
1.12 WARRANTY 6
1.13 MAINTENANCE 6
1.14 CERTIFICATES OF APPROVAL 6
1.15 OPERATING INSTRUCTIONS AND MAINTENANCE MANUALS 7
1.16 COOPERATION AND COORDINATION WITH OTHER TRADES 7
1.17 DEFINITIONS 8
1.18 SUBMITTALS 9
1.19 QUALITY ASSURANCE 9
1.20 DELIVERY, STORAGE, AND HANDLING 10
1.21 PROJECT CONDITIONS 10
1.22 HOISTING EQUIPMENT AND MACHINERY 10
1.23 STAGING AND SCAFFOLDING 11

PART 2 - PRODUCTS 11

2.1 SYSTEM CABLING 11
2.2 EQUIPMENT CABINETS 13
2.3 SURGE PROTECTED POWER STRIP 14
2.4 CABLE SUPPORTS 15
2.5 BONDING AND GROUNDING JUMPER CABLE 15
2.6 UNSHIELDED TWISTED PAIR (UTP) CABLING SYSTEMS 15
2.7 ELECTRONIC ACCESS CONTROL SYSTEM (PROPRIETARY) 17
2.9 HARDWARE AND PERIPHERALS 31
2.10 INTRUSION ALARM SYSTEM 40
2.11 EXTENDED SERVICE AND PREVENTATIVE MAINTENANCE AGREEMENT 43
2.12 INTEGRATED COMMUNICATION AND DOOR SYSTEM 45
2.13 IESS INTEGRATION 51

PART 3 - EXECUTION 52

3.1 GENERAL 52
3.2 EQUIPMENT RACKS, CABINETS AND BRACKETS 52
3.3 TERMINATIONS 52
3.4 CABLE PATHWAYS 52
3.5 SEALING OF PENETRATIONS AND OPENINGS 52
3.6 SEISMIC SUPPORTS, SUPPLEMENTARY STEEL AND CHANNELS 52
3.7 CABLE SUPPORTS 53
3.8 CABLE PROTECTION 53

3.9 INSTALLATION 53
3.10 TRAINING 53
3.11 ACCEPTANCE DEMONSTRATIONS 53
3.12 PROJECT OWNER COORDINATION 53
3.13 CLEANING UP 53
3.14 PROJECT CLOSEOUT 54
3.15 SPARE PARTS/ATTIC STOCK: 54

END OF SECTION

Section 28 00 00

SECURITY SYSTEM
(TRADE CONTRACT REQUIRED AS PART OF SECTION 26 00 01)

PART 1 - GENERAL

1.1 GENERAL PROVISIONS

A. Trade Contract: As provided under Section 26 00 01 – ELECTRICAL TRADE CONTRACT REQUIREMENTS and supplemented under the Bidding Requirements, Contract Forms, and Conditions of the Contract, and applicable parts of Division 1 - GENERAL REQUIREMENTS.

1. Work of this Trade Contract includes all individual specification sections listed in Section 26 00 01.

B. TRADE CONTRACT REQUIRING A PARAGRAPH “E” LISTING on the FORM FOR TRADE CONTRACT required per M.G.L. Chapter 149 Section 44A to 44L, as amended to date. The Electrical Subcontractor will be responsible for all related building preparation and coordination, see specification for additional Paragraph “E” Listing requirements of the Listed Systems Contractor, and coordination of responsibilities.

C. Section 28 00 00 SECURITY SYSTEM shall be a Trade Subcontract of Section 26 00 01 ELECTRICAL TRADE CONTRACT REQUIREMENTS, requiring a Paragraph “E” Listing on the FORM FOR TRADE CONTRACT.

D. This Section shall be provided by a qualified Systems Contractor.

1. The Systems Contractor shall be DCAM Certified by the state of Massachusetts Division of Capital Asset Management, in the category of: ALARM SYSTEMS. The Systems Contractor shall be DCAM Certified by the state of Massachusetts Division of Capital Asset Management, in the category of: ALARM SYSTEMS.

1.2 RELATED DOCUMENTS

A. All of the Contract Documents, including Drawings, General and Supplementary Conditions and Division 01 - General Requirements, apply to the Work of this Section.

B. Carefully examine all of the Contract Documents for requirements which affect the Work of this Section. The exact scope of Work of this Section cannot be determined without a thorough review of all specification Sections and other Contract Documents.

C. Refer to Section 012300, Alternates, for alternates which may affect the work of this Section.

1.3 DESCRIPTION OF WORK

A. Work described herein shall be interpreted as work to be done by the Integrated Electronic Security System Contractor. Work to be performed by other trades will be referenced to a particular contractor.

B. The work under this Section includes providing of all material, labor, equipment and supplies and the performance of all operations to provide a complete working Integrated Electronic Security System, as required by the Drawings and details as specified herein and in accordance with the Fuller Middle School. Where the Drawings, Specifications, Codes, Regulations, Laws, or the requirements of the drawings/specifications conflict, provide the higher quality and higher quantity indicated or required and follow the strictest requirement. In general, the work includes, but is not limited to, the following:

1. The Integrated Electronic Safety and Security System shall include:
   a. Electronic Access Control System (proprietary extension of existing district S2 system)
   b. Integration of Existing District Buildings (S2 access control system)
   c. Programming of existing Access control system database to include the new middle school.
   d. Upgrade of existing S2 software to the latest version. Include a cost within the Bid to upgrade the existing district access control system via the S2 forward program as well as update the SUSP to make the existing system current.
   e. Photo ID Badging System
2. Video Management System with required network video recorders for storage of video. (proprietary Cisco CCTV system extension of existing district system)
   a. IP CCTV cameras and licenses.
3. Intrusion Detection Systems.
4. Integrated Communication and Door System (IP Based Solution)
5. Equipment Racks and Cabinets.
6. Terminations.
7. Conduit Systems and sleeves will be provided by the Electrical Sub-Contractor.
8. 120VAC Power Requirements will be provided by Electrical Subcontractor.
9. Protection of new work.
10. Record Drawings and Documentation.
11. Staging.
12. Operation and Maintenance Instructions and Manuals for the Section's work.
13. Nameplates, Labels and Tags.
14. Testing and certification.
15. Fireproofing of Penetrations and Openings will be provided by the Electrical Sub-Contractor.
16. Access panels and doors.
17. Coordination with manufacturers, other trades and Owner.
18. Core drilling and cutting will be provided by Electrical Sub-Contractor.
19. Patching will be provided by General Contractor.
20. Testing of all equipment installed.
21. Training and product demonstrations
22. Facilitate and provide remote access to VMS for Police Dept.

C. Provide and maintain in safe adequate condition all staging and scaffolding required for the proper execution of the work of this Section.

D. Coordinate work with that of all other trades affecting or affected by work of this Section. Cooperate with such trades to assure the steady progress of all work under the Contract.

1.4 RELATED SECTIONS

A. Unless otherwise indicated, the following work is not included as part of the systems integrator's responsibilities in this SECTION, except for coordination, and is to be performed by others as indicated:

1. Surface mounted metal raceway will be provided by Electrical Sub-Contractor.
2. Empty conduits to accessible point above ceiling or below floor will be provided by Electrical Sub-Contractor.
3. Floor boxes and poke through devices will be provided by Electrical Sub-Contractor.
4. Standard device boxes with plaster rings for Integrated Electronic Security System will be provided by Electrical Sub-Contractor.
5. Interface with public utilities telephone service shall be arranged by the owner's service provider, and coordinated with this systems integrator.
6. Hardware: Section 087100 – Door Hardware
7. The installation, operating cost and maintenance of the controlled environmental conditions, for equipment located on site, as required by the manufacturer, NFPA 70B, or as specified in these specifications shall be the responsibility of the General Contractor.
8. All required sleeves, J-Hooks, boxes and conduits for a complete and operational system shall be provided by the Electrical SubContractor.
9. Section 019113 – General Commissioning Requirements and Section 28 08 00 – Commissioning of Electronic Safety and Security.

1.5 COMMISSIONING

A. Where indicated in the equipment or commissioning specifications, engage a factory-authorized service representative, to perform startup service as per functional test sheets and requirements of Section 019113 – General Commissioning Requirements and Section 28 08 00 – Commissioning of Electronic Safety and Security.

B. Complete installation and startup checks and functional tests according to Section 01 91 13 – General Commissioning Requirements, Section 28 08 00 – Commissioning of Electronic Safety and Security and manufacturers written instructions.

C. Operational Test: After electrical system has been energized, start units to confirm proper unit operation. Rectify malfunctions, replace defective parts with new one and repeat the start-up procedure.

D. Verify that equipment is installed and commissioned as per requirements of sections 01 91 13, 28 08 00 and manufacturers written instructions/requirements.

1.6 REFERENCES

A. Comply with applicable requirements of the following standards and those others referenced in their Section as most recently amended.

B. EIA/TIA Building Telecommunications Wiring Standards:
   1. No. 568B Series - Telecommunications Wiring Standards
   2. No. 569A - Telecommunications Pathways and Spaces
   3. No. 606 - The Administration Standard For the Telecommunications Infrastructure
   4. No. 607 - Grounding/Bonding

C. Materials and workmanship of the Integrated Security System shall conform to the latest issue of all industry standards, publications, or regulations referenced in this section and with the following applicable.
   1. Commonwealth of Massachusetts Building Code
   2. Massachusetts Electric Code, 2017 Edition
   3. State Department of Public Safety
   4. NFPA 101 “Life Safety Code”
   5. NFPA 72 National Fire Alarm Code
   6. NFPA Standards
   7. Standards of the Underwriters Laboratories (UL)
   8. Occupational Safety and Health Act (OSHA)
   9. Americans with Disabilities Act (ADA)
   10. Framingham

1.7 SYSTEM DESCRIPTION

A. Provide a complete working Integrated Electronic Safety and Security System as required by the Drawings and details and as specified herein.

1.8 PERFORMANCE REQUIREMENTS

A. Include GENERAL CONDITIONS, SUPPLEMENTARY GENERAL CONDITIONS and applicable parts of Division 01 as part of this Section.

B. Examine all Project Specifications and Drawings for requirements that affect work of this Section whether or not such work is specifically mentioned in this Section.

1.9 QUALIFICATIONS

A. It is the sole intent of this section to ensure to the end-user, single source responsibility from a single qualified systems integrator.

B. The Systems Integrator shall be experienced in the operations they are engaged to perform, trained, licensed, and factory certified.

C. UL Compliance: The system supplied shall be listed by Underwriter's Laboratories. A copy of the UL listing card for the proposed system shall be included with the Security subcontractor's submittal.

D. FCC Approval, the intrusion detection system shall be approved for direct interconnection to the telephone utility under Part 68 of FCC rules and regulations. Provide the FCC registration number of the system being proposed as a part of the submittal process.

E. The Systems Integrator shall hold a valid S-license in the Commonwealth of Massachusetts.

1.10 INTERPRETATION OF DRAWINGS

A. All work indicated on the Drawings is intended to be correct to scale, but figures dimensions and detailed Drawings are to be followed in every case. The Drawings shall be taken in a sense as diagrammatic. Size of raceways and methods of running them are indicated, but it is not intended to show every offset and fitting, nor every structural difficulty that may be encountered.

B. Locations indicated on the Drawings are approximate and it is intended that all equipment shall be located in accordance with the general and detail Drawings of the construction proper. Coordinate the location, mounting heights and routing of cabling work with other trade's requirements and with field conditions, Town electrician and engineer.

C. All measurements shall be taken at the building before fabrication commences.

D. Schematic diagrams shown on the Drawings indicate the required functions. Standard diagrams of the manufacturer may be used for the functions indicated without exact adherence to the Schematic Drawings shown. Work required for such deviations shall be provided.

E. Items referred to in singular number in Contract Drawings shall be provided in quantities necessary to complete work.

F. The right is reserved to make changes in locations of work prior to rough-in at no additional cost.

G. Where Drawings or Specifications conflict or are unclear, advise the Architect, in writing, before Award of Contract. Otherwise, interpretations of Contract Documents by the Architect shall be final, and no additional compensation shall be permitted due to discrepancies or unclarities resolved according to the Architect's interpretation.

H. It is the intent of these Contract Documents to have systems and components that are fully complete and operational and fully suitable for the intended use. There may be situations in the documents where insufficient information exists to precisely describe a certain component or subsystem, or the routing of a component. In cases such as this, where the Installer has failed to notify the Architect, in writing, of the situation prior to Contract Award, the Installer shall provide the specific component or subsystem with all parts necessary for the intended use, fully complete and operational, and installed in workmanlike manner either concealed or exposed per the design intent.

1.11 MATERIAL AND EQUIPMENT STANDARDS

A. Materials shall be new, unused, of recent manufacture, not previously installed, full weight, standard, the best quality of its kind and acceptable to the Architect.

B. Provide NRTL listed or labeled products whenever there are NRTL standards, listings or labeling available for that product category.

C. The Specifications or notes and description following a catalog number is basically to identify the item, but may also call for accessories, options or modifications which are not indicated in the catalog number.

D. Provide products of one manufacturer for each classification of equipment.

1.12 WARRANTY

A. Provide three (3) year Warranty, warranty shall start at time of substantial completion. Any failure due to defective material, equipment, installation or workmanship which may develop, shall be corrected at no expense to the Owner including all materials, labor, travel, expenses, system diagnostics and damage to areas, materials and other systems resulting from such failures.

B. Manufacturers shall provide replacement warranties for material and equipment furnished under this Section. Such warranties shall be in addition to and not in lieu of all liabilities which the Manufacturer and the Installer may have by law or by provisions of the Contract Documents.

C. Include copies of all warranties, maintenance contracts and training contracts or performance bonds in the Operation and Maintenance Manuals.

1.13 MAINTENANCE

A. Provide installers maintenance contract, for a period equal to warranty.

1.14 CERTIFICATES OF APPROVAL

A. Upon completion of all work, and as a condition to receiving payment at Substantial Completion, furnish to the Architect the following original signed certificates and include copies of these certificates as part of the Operation and Maintenance manuals: (Provide 3 copies of O & M Manuals).

1. Certification from the manufacturers authorized representative stating that authorized factory engineers have inspected and tested the operation of their respective equipment and found same to be installed in accordance with the manufacturer's requirements, all requirements for manufacturer's warranties are complied with, and equipment are within factory tolerances. This certification shall be provided for each piece of major equipment and for all complete systems. Provide certificate for additional items requested by the Architect.

2. Certificates of inspection, letters or notices from the appropriate governmental authorized inspection authorities stating that all portions of the work (indicate trade and responsibility) have been inspected and are installed in conformance with the applicable codes, laws, ordinances and referenced standards. If non-conformance notices are received, include the re-inspection certificate, letter of explanation, etc. as required to indicate complete conformance. Provide written evidence of all exceptions or variances given by the AHJ.

3. Certificate from the installing firm responsible for the work (indicate trade and responsibility) signed by an authorized Officer of the firm and the Foreman or Project Manager in charge, indicating trade license numbers and stating that to the best of the signer's knowledge and belief that the project (indicate project name and address) has been installed in compliance with the Contract Drawings, Specifications and Addenda, and all applicable codes, laws, ordinances and referenced standards. Where Security sub-contractors perform a portion of the work of this Section include certificates from them.

1.15 OPERATING INSTRUCTIONS AND MAINTENANCE MANUALS

A. Give detailed instructions, prior to the Substantial Completion of the work, to the responsible personnel designated by the Owner in the operation and maintenance of all work installed under this Section. A letter with two copies containing the name of the person or persons to whom the instructions were given and the dates of the instruction period shall be submitted to the Architect at the completion of the project.

B. Prepare three sets of Owner and Maintenance containing Manufacturer's catalogs, other similar data including the necessary photographic equipment cuts, wiring diagrams and final reviewed Shop Drawings and Product Data covering all equipment and devices furnished or installed under this Section. These manuals shall provide complete instructions for the proper operation and use of the equipment together with instructions for lubrication and periodic maintenance and for trouble shooting. Operating instructions shall be specific for each system and shall include copies of posted specific instructions. This manual shall contain only that information which specifically applies to this project and all unrelated material shall be deleted or clearly crossed out.

C. Submit a valid certificate of completion of installation and service training on the latest up-to-date version of the manufacturer’s equipment being provided from the security system (or systems) manufacturer (s) for at least two (2) present employees of the installer.

D. Include copies of all test reports and certifications.

1.16 COOPERATION AND COORDINATION WITH OTHER TRADES

A. The work shall be so performed that the progress of the entire building construction, including all other trades, shall not be delayed and not interfered with. Materials and apparatus shall be installed as fast as conditions of the building will permit and must be installed promptly when and as directed.

B. Electrical contractor shall provide box, conduit, pathways, 120V provisions and coordination only for this section. The integrated electronic security system components, wiring, and programming as described in this section will be provided by the General Contractor (GC). Electrical contractor to review this specification for coordination.

C. Section Includes:

1. One or more security access networked controllers.
2. Security access controllers connected to high-speed electronic-data transmission network.

3. Video Surveillance and all CCTV components, storage servers and integration software.
4. Intrusion Detection system and integration components to access control and CCTV.
5. Network switches required for “IESS” system.
6. Integrated door communication and video intercom system.

D. Related Sections:
1. Division 08 “All” for coordination with door hardware systems.
2. Division 23, Paragraph 2.30 Automatic Temperature Controls
3. Division 26 “All”

1.17 DEFINITIONS

A. CCTV: Closed-circuit television.

B. CPU: Central processing unit.

C. Credential: Data assigned to an entity and used to identify that entity.

D. Identifier: A credential card; keypad personal identification number; or code, biometric characteristic, or other unique identification entered as data into the entry-control database for the purpose of identifying an individual. Where this term is presented with an initial capital letter, this definition applies.

E. I/O: Input/Output.

F. LAN: Local area network.

G. Location: A Location on the network having a PC-to-controller communications link, with additional controllers at the Location connected to the PC-to-controller link with a TIA 485-A communications loop. Where this term is presented with an initial capital letter, this definition applies.

H. PCI Bus: Peripheral Component Interconnect. A peripheral bus providing a high-speed data path between the CPU and the peripheral devices such as a monitor, disk drive, or network.

I. RAS: Remote access services.

J. TCP/IP: Transport control protocol/Internet protocol incorporated into Microsoft Windows.

K. UPS: Uninterruptible power supply.

L. USB: Universal serial bus.

M. WAN: Wide area network.

N. Wiegand: Patented magnetic principle that uses specially treated wires embedded in the credential card.

O. Workstation: A PC with software that is configured for specific, limited security-system functions.

P. IESS: Integrated Electronic Security System

1.18 SUBMITTALS

A. Product Data: For each type of product indicated. Include rated capacities, operating characteristics, and furnished specialties and accessories. Reference each product to a location on Drawings. Test and evaluation data presented in Product Data shall comply with SIA BIO-01.

B. Shop Drawings: Include plans, elevations, sections, details, and attachments to other work.

1. Diagrams for cable management system.
2. System labeling schedules, including electronic copy of labeling schedules that are part of the cable and asset identification system of the software specified in Parts 2 and 3.
3. Wiring Diagrams. For power, signal, and control wiring. Show typical wiring schematics including the following:
   a. Controller layouts and interconnecting wiring.
   b. Each security device and wiring back to controllers.
   c. Full wiring diagram with all connections.
4. Cable Administration Drawings: As specified in "Identification" Article.
5. Battery and charger calculations for central station, workstations, and controllers.
6. Video storage calculations.

C. Samples: For card readers, rex devices, and keypads, jacks, jack assemblies, and faceplates. For each exposed product and for each color and texture specified.

D. Other Action Submittals:

1. Project planning documents as specified in Part 3.

E. Field quality-control reports.

F. Operation and Maintenance Data: Provide operation and maintenance for IESS per Division 01, Section 01 77 00.

1.19 QUALITY ASSURANCE

A. Installer Qualifications: An employer of workers trained and approved by manufacturer.

1. Cable installer must have on staff a registered communication distribution designer certified by Building Industry Consulting Service International. Provide current certification with shop drawings.
2. The installation contractor must possess a MA department of public safety ‘S’ license.
   a. Installing Contractor shall contain an S-License in conformance with M.G.L. Chapter 147 Sections 57 through 61.

B. Electrical Components, Devices, and Accessories: Listed and labeled as defined in NFPA 70, by a qualified testing agency, and marked for intended location and application.

C. Comply with NFPA 70, "National Electrical Code."

D. Comply with SIA DC-01, SIA DC-03 and SIA DC-07.

1.20 DELIVERY, STORAGE, AND HANDLING

A. Central Station, Workstations, and Controllers:

1. Store in temperature- and humidity-controlled environment in original manufacturer's sealed containers. Maintain ambient temperature between 50 and 85 deg F and not more than 80 percent relative humidity, noncondensing.
2. Open each container; verify contents against packing list; and file copy of packing list, complete with container identification, for inclusion in operation and maintenance data.
3. Mark packing list with the same designations assigned to materials and equipment for recording in the system labeling schedules that are generated by software specified in "Cable and Asset Management Software" Article.
4. Save original manufacturer's containers and packing materials and deliver as directed under provisions covering extra materials.

1.21 PROJECT CONDITIONS

A. Environmental Conditions: System shall be capable of withstanding the following environmental conditions without mechanical or electrical damage or degradation of operating capability:

1. Control Station: Rated for continuous operation in ambient conditions of 60 to 85 deg F and a relative humidity of 20 to 80 percent, noncondensing.
2. Indoor, Controlled Environment: NEMA 250, Type 1 enclosure. System components, except the central-station control unit, installed in [air-conditioned] [temperature-controlled] indoor environments shall be rated for continuous operation in ambient conditions of 36 to 122 deg F dry bulb and 20 to 90 percent relative humidity, noncondensing.
3. Outdoor Environment: NEMA 250, NEMA 250, Type 4X enclosures. System components installed in locations exposed to weather shall be rated for continuous operation in ambient conditions of minus 30 to plus 122 deg F dry bulb and 20 to 90 percent relative humidity, condensing. Rate for continuous operation where exposed to rain as specified in NEMA 250, winds up to 85 mph and snow cover up to 24 inches thick.

1.22 HOISTING EQUIPMENT AND MACHINERY

A. Unless otherwise specified, all hoisting and rigging equipment and machinery required for the proper and expeditious prosecution and progress of the Work of this Section shall be furnished, installed, operated and maintained in safe condition by the General Contractor, as specified under Section 015000, TEMPORARY FACILITIES AND CONTROLS.

1.23 STAGING AND SCAFFOLDING

A. Unless otherwise specified, each sub-contractor shall provide all lifts and man-lifts, and furnish, erect and maintain in safe condition, all staging and scaffolding as specified under Section 015000 Temporary Facilities and Controls, as needed for proper execution of the work of this Section. Staging and scaffolding shall be of adequate design, erected and removed by experienced stage builders having all accident prevention devices required by Federal, state and local laws.

PART 2 - PRODUCTS

2.1 SYSTEM CABLING

A. Provide and terminate all cabling per manufacturers recommendations for a completely operational system as specified.

B. CCTV System Cabling, provide & terminate all cabling as required for a completely operational CCTV System as required by equipment manufacturer.

1. CCTV Camera Cabling:
   a. CAT 6A cabling shall be provided for each CCTV camera location.
   b. Provide CAT 6A patch cabling as required between patch panels and POE switches at each IDF/MDF location and at camera locations.
   c. Power cabling for exterior devices shall be 12 gauge 2 conductor, provide applicable gauge per applicable distances.
   d. Data/Control cabling (for PTZ pan/tilt/zoom cameras) shall be 2-pair 22 gauge with an overall shield to applicable PTZ locations as specified, Belden #9841.
   e. Provide all line cords as required, field measured for proper length.
   f. Provide any additional cabling as required per manufacturer's specifications.
2. All Cat6A ethernet cabling for CCTV and Access control shall be black in color.
3. Telephone Line interface; provide and terminate a Cat 6 cable between security system headend and the MDF/Demarc.

C. Intrusion Alarm System Cabling, provide & terminate all cabling as required for a completely operational Intrusion Alarm System as required by equipment manufacturer.

1. Key Pad: The control station shall be connected to the control/communicator with #18 AWG, unshielded, 4-wire cable and have a maximum of 1000 feet between the control/communicator and the control station.
2. The Electrical Sub-Contractor shall provide 120VAC duplex outlet at the Intrusion Alarm System Controller location.
3. Multiplex Loops: Provide #18 AWG four conductor cable for loops up to 2000 feet, provide #18 AWG four conductor cable for loops up to 5000 feet. Do not use twisted pair or shielded cable for multiplex bus wiring loops. Cable shall be as required by the equipment supplier.
4. Audible Devices, provide a minimum #14 AWG four conductor cable.

5. Telephone Line interface, provide and terminate a Cat 6 cable between the Intrusion Alarm System Controller and the MDF/Demarc.

D. Cabling for Access Control System, provide & terminate all cabling as required for a completely operational Access Control System as required by equipment manufacturer.

1. EL = Door Lock Device; provide & terminate cabling between EL and associated Power Supply and between Power Supply and associated ACC. Electrical Sub-contractor shall confirm power supply location with installer. Electrical Sub-contractor shall provide 120VAC outlet and power supply backbox at power supply location. EL furnished and installed by door hardware, associated EL Power Supply furnished by door hardware provider, installed and wired by systems integrator. EL may be an Electronic Door Strike, Magnetic Door Lock, etc., see Architect for details.
2. CR = Door Reader Device; provide CR, provide and terminate cabling to associated ACC. The cable requirements of the card reader shall be a minimum five (5) conductor, 22 AWG, stranded cable with overall shield (for a Wiegand protocol interface). A six (6) conductor cable is required when controlling the red and green LED individually. A seven (7) conductor cable is required when both the red and green LED's are controlled by the Host. A 22 AWG twisted pair, shielded, stranded cable is required for use of the tamper switch. The card reader shall be provided with a 10 wire pigtail connector.
3. ALM = Alarm Line Module; provide ALM, provide & terminate cabling to associated Door Contact, and ACC. ALM mounts within J-Box at door location.
4. DC = Door Contacts (recessed in door/frame); DC furnished, installed and wired by systems integrator, provide & terminate cabling to associated ALM (Alarm Line Module).
5. ACC = Access Control System Controller.
6. ACS = PC & Monitor for Access Control System.
7. Fire Alarm System interface.

   Provide and terminate cabling between applicable electronic door lock power supplies and the fire alarm system headend. Terminations to fire alarm control panel by fire alarm subcontractor.

   Provide and terminate cabling between access control system head end and the fire alarm system head end. Terminations to fire alarm control panel by fire alarm subcontractor.

E. ACM Recommended Cables:

1. Specific rs-485 cables:
   a. PVC-Belden 9841 (1 pair), 9842 (2 pairs), 9844 all 24 AWG shielded
   b. Plenum – Belden 82841 (1 pair), 82842 (2 pairs), 89841 (1 pair), 89842 (2 pairs) all 24 AWG shielded.
   c. PVC – Belden 3105A (1 pair), 3107A (2 pairs), 3108A (3 pairs) all 22 AWG shielded (longer distances)
2. For Readers > Panel:
   a. Specific RS-232 cable
      1) PVC – Belden 9536 (6 wires) 24 AWG shielded
      2) PVC – Belden 9942 (6 wires) 22 AWG shielded (longer distances)

3. For Locks:
   a. Control Cables
      1) PVC – Belden 8719 (1 pair) 16 AWG shielded.
      2) Plenum – Belden 8471 (1 pair) 16 AWG unshielded (longer distances)
      3) PVC – 8461 (1 pair) 18 AWG unshielded
      4) Plenum – Belden 89740 (1 pair) 18 AWG unshielded
4. For Inputs:
   a. Control Cables
      1) PVC – Belden 8451 (1 pair) 22 AWG shielded
      2) PVC – Belden 8729 (2 pairs) 22 AWG shielded
      3) PVC – Belden 9418 (2 pairs) 18 AWG shielded
      4) PVC – Belden 9302 (2 pairs) 22 AWG shielded
      5) PVC – Belden 9305 (4 pairs) 22 AWG shielded
      6) PVC – Belden 9306 (6 pairs) 22 AWG shielded
      7) PVC – Belden 9309 (9 pairs) 22 AWG shielded
      8) Plenum – Belden 89418 (2 pairs) 18 AWG shielded
      9) Plenum – Belden 82777 (3 pairs) 22 AWG shielded, 82778 (6 pairs) 22 AWG shielded

2.2 EQUIPMENT CABINETS

A. Provide equipment cabinets to house all security equipment, communication equipment, telephone/data equipment, and audio visual equipment. Racks shall be located as shown on the drawings.

B. Manufacturer: Provide products meeting the requirements of the Drawings and Specifications from one of the following Manufacturers or equal:
   1. Chatsworth, Great Lakes.
   2. Winsted
   3. Lowell
   4. Or equal.

C. Equipment Cabinets
   1. Equipment Cabinets shall be seven feet (2134 mm) high, 24 inches (600 mm) wide, 31.5 inches (800 mm) deep, free standing cabinets as indicated on the drawings. These cabinets are also known as Primary Distribution cabinets, Remote Distribution cabinets, CCTV cabinets, AV cabinets, etc. Cabinet features shall include the following:
      a. Cabinets shall be welded construction, steel or aluminum, piano hinged doors with keyed locks and access handles on front and rear. Door locks shall be keyed alike. Color shall be approved by the Architect. Front door shall have integral shatter proof vision panels in a metal frame.
      b. Integral EIA nineteen inch (518 mm) wide, open bay equipment rack. Rack shall be as described herein this specification. Rack shall be located within the cabinet in order to properly mount all passive and active electronic components.

c. Shelves for electronic equipment with load carrying capacity to support at least 125 percent of each piece of electronic equipment weight. Shelves shall have adequate openings within them to dissipate heat and allow for adequate electronic equipment ventilation.

d. Mounting brackets specifically designed to support the equipment installed within the cabinet.

e. Hook and loop (Velcro) cable strain relief system on rear of rack to support horizontal and backbone cables. Tie-wraps are specifically prohibited.

f. Hook and loop (Velcro) horizontal and vertical cable management on front of rack to support patch cable and cross connect wiring. Tie-wraps are specifically prohibited.

g. Hook and loop (Velcro) cable management system independent of telecommunications cabling management to properly dress the electronic equipment power cords through the cabinet maintaining as much clearances between the two as possible. Tie-wraps are specifically prohibited.

h. Cabinets are to be design for convection ventilation, no fans shall be used. The individual cabinet shall have adequate ventilation in order to have a temperature within the cabinet be no greater than 88 degrees F based on an ambient room temperature of 78 degrees F in the warmer months of the year and 68 degrees F in the colder months of the year.

i. Bonding and grounding cables for all equipment not directly bolted to equipment rack (i.e shelf mounted electronic equipment, etc.).

j. Bonding and grounding buss bar with individual set screw terminals for at least six #6 Cu. bonding cables.

k. Surge protected power strip as described in this specification.

l. Patch panels as described in this specification.

m. Blank/louvered panels where required to fill gaps between equipment within the rack.

n. All hardware, supplementary steel, channel and supports as required to properly assemble the cabinet and support it to the building structure.

2.3 SURGE PROTECTED POWER STRIP

A. Manufacturer: Provide products meeting the requirements of the Drawings and Specifications from one of the following Manufacturers:

1. Wiremold Sentrex, TrippLite, S.L. Weber or equal.

B. Surge protected power strip shall be rack mount type with 10 ft. cord.

C. Surge protected power strip with six NEMA 5-15R outlets 15 amp capacity, 120 volts, UL 1449 listed, maximum surge current of 33,000 amps, clamping voltage of 260 volts, maximum 5 picosecond response time, resettable overload circuit breaker, surge suppression warning light, surge protection for line to neutral, line to ground, neutral to ground, EMI/RFI filters. One required for each load up to 1200 watts (total of individual equipment loads).

2.4 CABLE SUPPORTS

A. Manufacturer: Provide products meeting the requirements of the Drawings and Specifications from one of the following manufacturer's:

J-Hooks:	Caddy, Chatsworth, Mono-System, or equal.
Hook and Loop Fasteners:	Chatsworth, Ortronics, Siemons, or equal.
Cable Ties:	DEK, Panduit, Amp, 3M, T&B, or equal.
Beam Clamps:	Burndy, Minerallac, Kindorff, Steel City, OZ/Gedney, or euqal.
Split Mesh Strain Reliefs (Kellums):	Hubbell, Woodhead, or equal.

B. J-Hooks shall be sized to correctly support the number of cables, which pass through them. Under no circumstances shall cable quantity exceed 50 in any given support. Fill capacity shall be as required by code for conduit. That is to say that every J-Hook shall have a maximum of 40 percent fill capacity. Install additional supports as required.

C. Hook and loop fasteners shall be designed for their specific application. For example, if a hook and loop fastener is used to support cables to a rack, it shall have a grommeted outlet for use with a 10-32 rack mounting screw.

D. Cable-ties shall be correctly sized to support the quantity and types of cables installed.

E. Beam clamps shall be steel with threaded bolt type closure. Spring steel or "quick-clip" type clamps are prohibited.

F. Split mesh strain reliefs shall be properly sized for each cable that they support. Only one cable shall be installed in each split mesh strain relief.

2.5 BONDING AND GROUNDING JUMPER CABLE

A. Manufacturer: Provide products meeting the requirements of the Drawings and Specifications from one of the following manufacturers:

1. Belden (No. 8669) or equal.

B. Jumper cable shall be hollow braided, 60 amp capacity, copper.

C. Provide equal conduct of as described in "B" above for aluminum equipment.

D. Jumpers shall have compression or exothermic type terminals on both ends of cables. Terminals shall be compatible with jumper cable material and equipment material in order to not have any degenerative reaction.

2.6 UNSHIELDED TWISTED PAIR (UTP) CABLING SYSTEMS

A. Provide all security data cabling as specified herein and shown on the Security drawings. The security cable and jacks shall be red in color.

B. Manufacturer: Provide products meeting the requirements of the Drawings and Specifications from one of the following manufacturer's or equal:

Wire and Cable:	Belden, Berk-Tek, CommScope, General Cable, Mohawk, or equal.
Patch Panels:	Hubbell, Ortronics, Panduit, or equal
Patch Cables:	Shall be provided by patch panel, Outlet or wire and cable manufacturer.
Cable Management:	Shall be provided by patch panel manufacturer.

NOTE: Each of the products listed above shall be provided by a single manufacturer.

C. UTP Pin/pair Termination Assignment

1. The UTP cabling systems shall have EIA/TIA 568B Series standard pin/pair termination assignment. All conductors provided shall be properly and consistently terminated at both ends throughout the entire systems.

D. Horizontal Cable –Security Data

1. Provide & terminate cabling from each camera location to applicable IDF/MDF/Low Voltage rack locations.
2. Data Cable shall be TIA/EIA-568-B.2-1 Category 6A Unshielded Twisted Pair (UTP) as specified.
   a. Cable shall meet or exceed the approved TIA/EIA-568-B.2-1 Category 6A Unshielded Twisted Pair (UTP) cable standard for 24AWG four pair Category 6A cable.
   b. Acceptable equal cables shall be General Cable Command LINX 6; and GenSPEED 6000 Category 6A cables.
   c. Plenum rated cable - CMP rated jacket for Plenum applications.

E. Cable Management

1. Each equipment rack and equipment cabinet shall have cable management panels with horizontal and vertical brackets.
   a. Cable management shall be EIA 19 inch (518mm) rack mounted 3.5 inch (88mm) high panel with horizontal and vertical patch cable, distribution rings, or approved equivalent and shall be provided above and below each patch panel in the equipment rack.
   b. Equipment rack cable management shall be furnished by patch panel manufacturer.
   c. Cable management for high density, IDC Type cross-connect block panels shall be distribution rings integral to the panel or approved equivalent. Cable management shall be provided above and below each cross connect block in the equipment rack.

F. Modular Jacks

1. Jacks shall be TIA/EIA Category 6A (UL Category 6A) with printed circuit board technology and integral board mounted, color-coded, high density, IDC type terminations. Provide 8 position modular jacks. Keyed jacks are not allowed. Jacks shall be able to withstand at least a minimum of 2000 mating cycles without any transmission degradation.
2. Modular jacks color shall be red.

3. Each 8-position modular jack shall have color-coded icons.
4. Modular jacks that allow pre-connectorized cables to be connected to the jacks are specifically prohibited. Cables shall have single point IDC Type connection to the jacks only.
5. Jack modules shall be flame retardant thermoplastic with integral cable strain relief. Color shall match faceplate.

G. Data Patch Panels for Security

1. Patch panels shall be EIA nineteen inch (518mm), rack mounted, TIA/EIA Category 6A, UL Category 6A type patch panels with integral printed circuit board, color-coded, high density, IDC type terminations and 8 position modular jacks. Keyed jacks are not allowed. Jacks shall be able to withstand at least a minimum of 2000 mating cycles without any transmission degradation.
2. Provide high density rack mounted patch panels.
3. Modular Jacks that allow pre-connectorized cables to be connected to the jacks are specifically prohibited. Cables shall have single point IDC type connection to the jacks only.
4. Each port shall have color-coded identification label. Continuous label strips for multiple in-line ports are acceptable. Silk screened identifiers "l" through "96" are acceptable.
5. Patch panel shall have horizontal strain relief bar on mounted rear.
6. Data Port Labeling Standard
   a. <Closet>-<Patch Panel>-<Cable Purpose><Patch Panel Port Number>

      For Example: 3330-B-D43, This signifies that IDF Room 3330 Panel B on Data Patch Panel port 43

H. Patch Cables and Line Cords

1. Patch cables and line cords shall be factory pre-connectorized, TIA/EIA Category 6A (UL Category 6A), 4 UTP, 8-position modular jack, stranded conductors. Patch cables and line cords shall be able to withstand at least a minimum of 2000 jack mating cycles without any transmission degradation.

I. Cross Connect Cabling

J. Cross-connect cabling shall be NRTL certified that it meets or exceeds the TIA/EIA UL category rating of the system installed.

2.7 ELECTRONIC ACCESS CONTROL SYSTEM (Proprietary)

A. Access Control/Security Management System

1. System Description
   a. The access control system shall be an extension of the existing S2 system.
      1) Provide all required software upgrades at the existing head end to the latest compatible version and all required licenses to complete the system extension and support the Fuller Middle school. Coordinate admin rights with the town IT director.
   b. Manufacturer:
      1) S2 (Proprietary)

B. SUMMARY

1. Section includes the S2 Security Corporation Security and Database Management System (SMS) consisting of computer hardware, software, and associated licensing and equipment for monitoring, recording, and managing Electronic Access Control System (EACS) and Integrated Systems (IS) data and functionality.
2. The SMS shall meet the requirements of business and government access control systems. The system shall monitor and control facility access, and shall perform alarm monitoring, camera and video monitoring (when integrated with a compatible integrated Video Monitoring System), communications loss monitoring, and temperature monitoring. The system shall also maintain a database of system activity, personnel access control information, and system user passwords and user role permissions. The system shall be controlled from a web browser and require no software installation or client licenses. The system shall provide control and access to users on Local Area Networks (LAN), Wide Area Networks (WAN), wireless networks, and the Internet. The system shall provide email and/or text message alerts for all alarm conditions and threats.
3. The SMS includes the following sub-components:
   a. Operating Systems (OS) software and firmware
   b. Application Software
   c. Database Software
   d. Network connected Security Management Servers
   e. Network connected field level panels
4. The SMS shall be integrated with monitoring and control systems specified in the following specification sections:
   a. Division 280000 VMS, and intrusion sections
   b. Division 260000 Fire alarm and lighting control systems
   c. Division 270000 Public address system

C. RELATED DOCUMENTS

1. Drawings and general provisions of the Contract, including:
   a. Drawings:
      1) E500, E501A, E501B, E501C, E502A, E502B, E502C, EPH500, EPH501, EPH502
2. Related Specification Sections:
   a. Division 260000
   b. Division 270000

D. DEFINITIONS

1. API: Application Programming Interface
2. AVI: Audio Video Interleave
3. CA: Certificate Authority
4. CAC: Common Access Card
5. CE: European Union Conformity

6. CPU: Central Processing Unit
7. CSV: Comma Separated Values
8. DNS: Domain Name Server
9. DSM: Door Status Monitor
10. DVR: Digital Video Recorder
11. EACS: Electronic Access Control System
12. FCC: Federal Communications Commission
13. FIPS: Federal Information Processing Standard
14. FIFO: First In – First Out
15. FTP: File Transfer Protocol
16. FRAC: First Responder Authentication Credential
17. GB: Gigabyte
18. GSOC: Global Security Operations Center
19. HA: High Availability
20. HTML: Hypertext Markup Language
21. H.264: Video Compression Standard
22. I^2C: Inter-Integrated Circuit
23. IEEE: Institute of Electrical and Electronics Engineers
24. I/O: Input / Output
25. IP: Internet Protocol
26. IS: Integrated System
27. JPEG: Joint Photographic Experts Group
28. LAN: Local Area Network
29. LDAP: Lightweight Directory Access Protocol
30. MB: Megabyte
31. MJPEG: Motion JPEG
32. MSATA: Mini-Serial Advanced Technology Attachment
33. MSP: Mobile Security Professional
34. MTBF: Mean-Time Between Failure
35. NAS: Network Attached Storage
36. NAT: Network Address Translation
37. NBAPI: NetBox Application Programming Interface
38. NECA: National Electric Code Association
39. NFPA: National Fire Protection Association
40. NVR: Network Video Recorder
41. ODBC: Open Database Connectivity
42. OS: Operating System
43. OVID: Open Video Integration Driver
44. PDF: Portable Document Format

45. PIN: Personal Identification Number
46. PIV: Personal Identity Verification
47. PoE: Power over Ethernet
48. PTZ: Pan-Tilt-Zoom
49. RAID: Redundant Array of Independent Disks
50. RAM: Random Access Memory
51. REX: Request to Exit
52. RFID: Radio Frequency Identification
53. RoHS: Restriction of Hazardous Substances
54. ROM: Read Only Memory
55. RU: Rack Unit
56. SFTP: Secure File Transfer Protocol
57. SHA: Secure Hash Algorithm
58. SIO: Serial Input / Output
59. SLA: Sealed Lead-Acid
60. SMS: Security Management System or Short Message Service (text messaging)
61. SSL: Secure Sockets Layer
62. SUSP: Software Upgrade and Support Plan
63. TCP: Transmission control protocol - connects hosts on the Internet
64. TIA: Telecommunications Industry Association
65. TLS: Transport Layer Security
66. TWIC: Transportation Worker Identification Credential
67. UI: User Interface
68. UPS: Uninterruptible Power Supply
69. UTP: Unshielded Twisted Pair
70. VMS: Video Management System
71. WAN: Wide Area Network
72. Wi-Fi: Wireless Network

E. PERFORMANCE REQUIREMENTS

1. The S2 SMS shall be certified to meet the following standards:
   a. ISO 9000
   b. System shall be RoHS (Restriction of Hazardous Substances) compliant and meet proposed amendments to the reduction of toxic substances in manufacturing as stated in the Environmental Design of Electrical Equipment Act (EDEE)
   c. Electrical Components, Devices, and Accessories: Listed and labeled as defined in NFPA 70, by a qualified testing agency and marked for intended location and application
   d. Installation shall comply with NECA 1-2010 “Standard Practice of Good Workmanship in Electrical Construction”

e. Installation shall comply with NEC/NFPA 70E “Standard for Electrical Safety in the Workplace”

f. Electronic data exchange between Video Surveillance System and an Access Control System shall comply with SIA TVAC

g. Installation shall comply with FCC CFR 47 Part 15 Class A "Telecommunications, Radio Frequency, Digital Device Emission”

h. Installation shall comply with federal, state, and local codes and Authority Having Jurisdiction (AHJ)

F. ACTION SUBMITTALS

1. Product Data: Provide details and technical specifications for each product indicated. Include physical dimensions, features, performance, electrical characteristics, ratings, software versions, and operating system details.
2. Shop Drawings: Include system line diagrams, equipment locations, installation details, and system integration plans.
3. Detail equipment assemblies and indicate dimensions, weights, loads, required clearances, method of field assembly, components, and location and size of each field connection.
4. Functional Block Diagram: Show single-line interconnections between components for signal transmission and control. Show cable types, quantities, and sizes.
5. Plans and Elevations: Dimensioned plans and elevations of equipment racks, enclosures, and conduit interconnections, including access and workspace requirements.
6. Data Calculations: Provide data bandwidth and storage calculations, including data backup and archive configuration details meeting the minimum project requirements as described herein.
7. Power and Heat Load Calculations: Provide power and heat load calculations for all hardware, including UPS capacity calculations.
8. Wiring Diagrams: For power and signal wiring.
9. Equipment and Software List: Include every piece of equipment and software by product/model name and/or number, manufacturer, serial number, revision number, location, and date of original installation. If factory and/or bench testing regimens are required by the project plan, add pretesting record of each piece of equipment and software, listing name of person testing, date of test, and adjustments made.

G. INFORMATIONAL SUBMITTALS

1. ISO9000 Listing Certificates
2. CE and FCC Compliance Certificates:
3. Field quality-control reports
4. Current S2 Security Integrator Certification Letter
5. Current S2 Security Training Certificates (listing expiration dates) for two (2) technicians from the supporting office
6. Warranty: Software support and warranty information for all components, including Service Level Agreement (SLA) details, and duration of agreement from date of system acceptance by Owner

7. Product data sheets for system components highlighted to indicate the specific products, features, or functions required to meet this specification. Alternate or as-equal products submitted under this contract must provide a detailed line-by-line comparison of how the submitted product meets, exceeds or does not comply with this specification.
8. Bill of Materials.
9. Table of contents with page numbering.

H. CONTRACTOR REQUIERMENTS

1. The Security SubContractor shall have a supporting office within 100 miles of the project location
2. Certifications: Two (2) technicians from the supporting office shall hold current certifications with S2 Security
3. On-site maintenance and repair service shall be available locally and within four (4) hours of notification of condition
4. On-site Contractor personnel shall hold all required local, state, and federal licenses
   a. On-site Contractor personnel shall hold current certifications with S2 Security
5. The Contractor shall provide three (3) references for completed projects of similar scope

I. CLOSEOUT SUBMITTALS

1. Operation and Maintenance Data: For all components and software to include in emergency, operation, and maintenance manuals.
2. Extra Materials:
   a. Return all left-over (unused) product and materials to the Owner
3. Applicable operating system, database, client, and application software on portable storage media
4. Full System Backup as of closeout date on portable storage media
5. Submit one (1) printed and one (1) electronic copy of project binder in final form. This copy shall contain as a minimum:
   a. Table of Contents for each element
   b. Security SubContractor information - names phone numbers, and email for sales, technical support, and consumables reordering
   c. Lists of spare parts and replacement components recommended to be stored at the site for ready access
   d. Datasheets for all equipment
   e. Operation and maintenance manuals for all equipment
   f. Operation and maintenance procedures not covered in manufacture's manuals
   g. Training:
      1) Program Syllabus.
      2) Manual(s) and Material(s).

J. QUALITY ASSURANCE

1. Installation shall comply with federal, state, and local codes and Authority Having Jurisdiction (AHJ).
2. Electrical Components, Devices, and Accessories: Listed and labeled as defined in NFPA 70, by a qualified testing agency, and marked for intended location and application.
3. All software and hardware shall be programmed and installed in accordance with manufacturer's specifications.
4. All equipment shall be new, in current production, and the standard products of a manufacturer of ESS equipment.
5. Manufacturer shall guarantee availability of parts, for a minimum of seven (7) years from date of shipment.
6. On-site maintenance and repair service shall be available locally and within four (4) hours of notification of condition.
7. Security SubContractor shall review drawings and specifications.
8. Software integration between all integrated systems shall be tested and certified for interoperability by the manufacturer of each system.
9. Software integration between the SMS, VMS, and all other integrated system components shall be tested and certified for interoperability by the manufacturers of each system.

K. PERMITS

1. All permits required for the specified performance and completion of the work shall be secured by the Security SubContractor

L. PROJECT CONDITIONS

1. Environmental Conditions: System components shall withstand the following environmental conditions without mechanical or electrical damage or degradation of operating capability:
   a. Interior Environmentally Controlled Space: Rated for continuous operation in ambient temperatures of 32° to 95° F (0° to 35° C) dry bulb and a relative humidity of 20 to 80 percent, noncondensing.

M. WARRANTY

1. Manufacturer's standard form in which manufacturer agrees to service, repair or replace system components as needed for proper system operation as specified herein.
2. Warranty Period: a 2-year warranty on hardware and a 1-year warranty on labor and software from date of date of Owner Acceptance.

N. OPERATIONAL REQUIREMENTS

1. The SMS shall be implemented through network appliance architecture with a three-tier modular hardware hierarchy and embedded three-tier software architecture.
   a. The network appliance shall be capable of running on an existing TCP/IP network and shall be accessible, configurable, and manageable from any network-connected PC with a browser.

b. Browser access for configuration and administration of the system shall be possible from a PC on the same subnet, through routers and gateways from other subnets, and from the Internet. Control and management of the system shall therefore be geographically independent.

c. Security of the data communicated over the network to and from the browser, Network Controller, and field panels shall be protected by TLS protocol encryption. The connection shall use TLSv1.2, GCM mode and a 2048-bit RSA key.

d. The top hardware tier shall be the Network Controller. Embedded on the Network Controller shall be an operating system, a web server, security application software, and the database of personnel and system activity. Converged Video Access systems shall also include fully functional network video recorder.

e. The middle hardware tier shall be the Network Node. The Network Node shall make and manage access control decisions with data provided by the Network Controller, and it shall manage the communication between the Network Controller and Application Blades connected to the system's inputs, outputs, and readers. This modular design shall make it possible, even during network downtime, for the system to continue to manage access control and store system activity logs. When network connectivity is re-established, the system activity logs shall be automatically re-integrated.

f. The bottom hardware tier shall be the Application Blades. Four unique Application Blades shall be available:
   1) Access Control Blade: shall support two readers, four supervised inputs, and four relay outputs.
   2) Alarm Input Blade: shall support eight supervised inputs.
   3) Relay Output Blade: shall support eight relay outputs.
   4) Temperature Blade: shall support eight analog temperature sensor inputs.

2. The SMS shall integrate, within a browser interface, access control, alarm monitoring, video monitoring, and temperature monitoring applications. These applications shall be embedded in a three-tier software architecture.

   a. The database tier shall use PostgreSQL. PostgreSQL is a full featured, high performance database management system that supports ODBC. This shall provide a small footprint, low administration, and a high reliability relational database that is embedded without requiring the use of a separate PC server.

   b. The web server tier shall be based on an Apache™ embedded web server. This shall provide a graphically rich security management application through a standard web browser.

   c. The security application software tier contains the business logic. This application shall also be embedded on the Network Controller and requires no additional memory or processing power.

   d. This three-tiered embedded software design runs within an embedded Linux Ubuntu 16.04 LTS operating system and shall require no client-side software other than a web browser.

3. All equipment and materials used shall be standard components, regularly manufactured, and regularly utilized in the manufacturer's system.

4. All S2 systems and components shall have been thoroughly tested and proven in actual use.

5. The S2 Network Node shall make and manage access control decisions with data provided by the Network Controller, and it shall manage the communication between the Controller and Application Blades connected to the system's inputs, outputs, and readers. The Network Node shall be supplied with 120V AC at a minimum of 2.3 amps. The Network Node can optionally be powered by 12V DC at a minimum of 7Ah. Internal SLA battery backup shall supply sufficient power to provide for an orderly shutdown of the system in case of loss of external power. External battery backup shall be used to provide uninterrupted operation in the event of external power loss. Each Network Node shall support up to seven Application Blades. Communications between the Network Node and Network Controller shall be encrypted and authenticated using TLS digital certificates. Each Network Node shall have the following capabilities:

a.	Application Blades	7
b.	Readers	14
c.	Reader Groups	256
d.	Access Levels	512
e.	Portals	14
f.	Portal Group	64
g.	Supervised Inputs	56
h.	Input Groups	64
i.	Relay Outputs	56
j.	Output Groups	64
k.	Temperature Inputs	56
l.	Time specifications	512
m.	Time spec groups	512
n.	Time specs per group	8
o.	Threat Levels	8
p.	Threat Level Groups	32
q.	Holidays	30
r.	Access levels	512
s.	Access levels per person	32
t.	Credentials per person	Unlimited
u.	Card formats	64
v.	Elevators	14
w.	Floors	52
x.	Floor Groups	128
y.	Time spec groups	512
z.	Credential Storage	Unlimited
aa.	Activity Log Records	800,000

bb.	OS	Linux
cc.	Ethernet Ports	1
dd.	Dimensions (H, W, D) Wall Mount:	17.0in x 15.0in x 6.75in (43.18cm x 38.1cm x 17.15cm)
ee.	Dimensions (H, W, D) Rack Mount:	7.0inx19.0in x 15.0in (17.78cm x 48.26cm x 38.1cm)
ff.	Weight	18 lbs (8.6 kg)
gg.	Operation Temperature	32° to 95°F (0° to 35°C)
hh.	Storage Temperature	-4° to 158°F (-20° to 70°C)
ii.	Relative Humidity	5-90% non-condensing
jj.	MTBF	297,000
kk.	BTU/h	184

6. The Application Blades shall interface with the Network Controller through the Network Node. The Application Blades shall be blade-style circuit cards. There shall be four types of Application Blades:
   a. S2 Access Control Blade - The access control blade shall receive power via the ribbon cable bus directly from the Network Node blade. The access control blade shall supply up to 500 mA of power to one reader or 250 mA of power to each of two readers.

1)	Reader Connectors	2
2)	Max Reader Cable Length	500 feet (152m) (18 AWG twisted, shielded)
3)	Reader Power	500 mA
4)	Input Connectors	4
5)	Max Input Cable Length	2000 feet (610m) (22 AWG twisted shielded)
6)	Output Connectors	4

7. S2 Input Blade - The input blade shall receive power via the ribbon cable bus directly from the Network Node blade. It shall support a wide variety of input supervision types including normally-open circuit and normally-closed circuits, and zero, one or two resistor configurations.

a.	Input Connectors	8
b.	Max Input Cable Length	2000 feet (610m) (22 AWG twisted, shielded)
c.	Supervision Types	4 (open, closed, normal, alarm)

8. S2 Output Blade - The output blade shall receive power via the ribbon cable bus directly from the Network Node blade. Both normally-open circuit and normally-closed circuit output devices shall be supported. The relay outputs shall support any output devices that operate on the following maximum electrical ratings: 30 Volts DC or AC, 2.5 Amps inductive or 5.0 Amps non-inductive.

a.	Output Connectors	8
b.	Contact Type	Form C

c.	Max Electrical Ratings	30 Volts DC, 2.5 Amps Inductive, 5.0 Amps non-inductive.

9. S2 Temperature blade - The temperature blade shall receive power via the ribbon cable bus directly from the Network Node blade.

a.	Temperature Inputs	8
b.	Max Temperature Cable Length	1000 feet (305m) (18 AWG twisted, shielded)
c.	Temperature Range	32° to 158° F (0° to 70° C)

10. All wall-mount enclosures shall have a lock requiring a key, and a cabinet door tamper switch.
11. S2 Software Licensing:
    a. Software licensing shall be based upon the number of portals, cameras, and select features for one Network Controller. Software license upgrades shall be available if system portal and camera capacity must be increased. The S2 user license shall be valid in perpetuity and shall include one year of software updates from the date of shipment from the factory.
    b. Licensing shall be controlled by a Product Key and an Activation Key. The Product Key contains the licensed system features and limits. To upgrade your system license to enable more cameras or more portals you will need a new Product Key. The Activation Key contains the software support expiration date. The keys are locked to the system license number. The system license number shall be viewable on-screen on the About page
    c. All required licensing to support all required access control equipment shall be provided by the integrator. All system upgrade and support plan (SUSPs) shall be current, and if expired, shall be renewed through the next year.
12. Software upgrades shall be possible from a browser on any network-connected PC by uploading a software update to the Network Controller. The Network Controller shall automatically upgrade all connected Network Nodes. No client software installation shall be necessary.

O. EXAMINATION

1. Examine cable pathways including conduit, raceways, cable trays, and other pathway elements for compliance with space allocations, installation tolerances, hazards to cable installation, and other conditions affecting installation.
2. Examine rough-in for control cable and conduit systems to controllers, card readers, and other system components to verify conduit and back-box locations prior to installation of system devices
3. Examine available network capacity and support infrastructure. Consult with network administrator for compliance with network standards and capacity
4. Examine install location for compliance with space allocations, installation tolerance, hazards to safe system operation, and other conditions affecting installation
5. Examine roughing-in for LAN, WAN, and IP network before device installation

P. PREPARATION

1. Comply with SIA CP-01 Control Panel Standard.

2. Comply with ANSI/TIA-606-B Labelling Standard.
3. Prepare detailed project planning forms for programming and configuration of the SMS. Fill in all data available from project plans and specifications and publish as project planning documents for review and approval. These may include (but are not limited to):
   a. Define SMS Partitions.
   b. For each Location, record setup of Network Controller features and access requirements.
   c. Propose start and stop times for time zones and holidays, and match up access levels for doors.
   d. Set up groups, facility codes, software triggers, and list inputs and outputs for each Network Controller.
   e. Assign action message names and compose messages.
   f. Set up alarms. Establish trigger actions between events and video surveillance features.
   g. Prepare and install alarm graphic maps.
   h. Develop user-defined fields.
   i. Develop screen layout formats.
   j. Discuss badge layout options; design badges.
   k. Complete system diagnostics and operation verification.
   l. Prepare a specific plan for system testing, startup, and demonstration.
   m. Develop acceptance test concept and, on approval, develop specifics of the test.
   n. Develop cable and asset-management system details; input data from construction documents. Include system schematics and technical drawings in electronic format.
4. In meetings with Architect and Owner, present Project planning documents and review, adjust, and prepare final programming and configuration documents. Use final documents to program and configure software.

Q. CABLING
1. Comply with NECA 1, "Good Workmanship in Electrical Construction".
2. Wiring Method: Install wiring in raceway and cable tray except within consoles, cabinets, desks, and counters. Conceal raceway and wiring except in unfinished spaces.
3. Install LAN cables using techniques, practices, and methods that are consistent with Category 6 rating of components and fiber-optic rating of components, and that ensure Category 6 performance of completed and linked signal paths, end to end.

4. Junction boxes and enclosures containing security-system components or cabling, and which are easily accessible to employees or to the public, shall be provided with tamper resistant fasteners and/or tamper detection switches. In addition, hinged enclosure doors shall be equipped with locking hardware. Boxes above ceiling level in occupied areas of the building shall not be considered accessible. Junction boxes and small device enclosures below ceiling level and easily accessible to employees or the public shall be covered with a suitable cover plate and secured with tamperproof screws.
5. Install end-of-line resistors at the field device location and not at the controller or panel location.
6. Card Readers and Keypads and Peripheral Devices:
   a. Install number of conductor pairs recommended by device manufacturer for the functions specified.
   b. Follow device manufacturer's installation requirements for maximum cable distances and sizes.

R. IDENTIFICATION

1. Label, in plain English, each end of each cable, field panel, patch panel, network switch, or cabinet
   a. Each cable or wiring group being extended from a panel or cabinet to a building-mounted device shall be identified with the name and number of the device as shown
2. At completion, cable and asset management documentation shall reflect as-built conditions

S. SYSTEM SOFTWARE AND HARDWARE

1. Develop, install, and test software and hardware, and perform database tests for the complete and proper operation of systems involved.
2. Assign the software license(s) to Owner.
3. All default password shall be changed to those selected by the owner
   a. The Security Subcontractor shall retain no records of passwords for the project

T. FIELD QUALITY CONTROL

1. Manufacturer's Field Service: Engage a factory-authorized service representative to inspect components, assemblies, and equipment installations, including connections, and to assist in testing.
2. Factory Commissioning: Onsite visit by the Manufacturer's in-house personnel to inspect, test, and assess system programming, functionality, and performance.
3. Tests and Inspections:
   a. Inspection: Confirm that units and controls are properly installed, connected, and labeled, and that interconnecting wires and terminals are identified.
   b. Pretesting: Configure and pretest system components, wiring, and functions to confirm that they comply with specified requirements.

c. Operational Test: After installation of cables and connectors, demonstrate product capability and compliance with requirements.

d. Test Schedule: Schedule tests after pretesting has been successfully completed and system has been in normal functional operation for at least <14 days>. Provide a minimum of 10 days' notice of test schedule.

e. Operational Tests: Perform operational system tests to confirm that system complies with Specifications. Include all modes of system operation. Test equipment for proper operation in all functional modes.

4. The system is considered defective and the project incomplete if it does not pass tests and inspections

5. Prepare test and inspection reports.

U. STARTUP SERVICE

1. Engage a factory-authorized service representative to supervise and assist with startup service.

2. Provide onsite visit by Manufacturer’s in-house personnel to train Owner’s operations personnel.

3. Complete installation and startup checks according to approved procedures that were developed in "Preparation" Article and with manufacturer's written instructions.

4. Enroll and prepare badges and access cards for Owner's operators, management, and security personnel.

V. ADJUSTMENTS

1. Occupancy Adjustments: When requested within **<30 days>** of date of Substantial Completion, provide on-site assistance in adjusting system to suit actual occupied conditions. Provide up to two visits to Project for this purpose. Tasks shall include, but are not limited to, the following:

a. Check cable connections

b. Confirm system configuration and adjust settings needed

c. Recommend changes to the system to improve Owner's use

d. Provide a written report of adjustments and recommendations

W. DEMONSTRATION

1. Engage a factory-authorized service representative to train Owner's maintenance personnel to adjust, operate, and maintain the system equipment.

2. Develop and provide separate training modules for the following:

a. Computer system administration personnel to manage and repair the LAN and databases and to update and maintain software.

b. Operators who prepare and input credentials, monitor the SMS, and to enroll personnel.

c. Security personnel.

d. Hardware maintenance personnel.

e. Corporate management.

X. MAINTENANCE

1. The Security SubContractor shall offer a Software Upgrade and Support Agreement (SUSP)
   a. The Security subcontractor shall offer the SUSP in 3 year.
   b. As part of the agreement, normal business hours (9:00 AM – 6:00 PM), manufacture phone support shall be available.
   c. The option of 24/7 telephone support shall be offered.
   d. As part of the agreement, access to software patches and software upgrades shall be available.

Y. Security SubContractor Responsibility:

1. All products shall be new and unused, and be provided from the manufacturer's current and standard production. Where two or more equipment items of the same kind are provided, all shall be identical and provided by the same manufacturer. Drawings and specifications shall indicate major system components, and may not show every component, connector, module, or accessory required to support the operation specified. Security SubContractor will provide all components needed for complete and satisfactory operation.

2.8 HARDWARE AND PERIPHERALS

A. Core and Edge Network Switch (Proprietary)

1. Provide Power over Ethernet (PoE) network switch(s) for all cameras, access control panels, encoders/decoders, security workstations, video servers, and access control servers.
2. Each switch shall have 20 percent spare capacity per closet/IDF/MDF.
3. Each network switch shall be located in each IDF/MDF.
4. Provide all required network switches. Network switches are proprietary
   a. IDF rooms shall utilize HP/Aruba 2920 , model# J9729A
   b. MDF room shall utilize HP/Aruba 5406R model# JL003A with 2 -1100 Watt power supplies (Model J9829A)
5. Provide an interface to the owner's LAN as required.

B. IP CCTV Cameras (Proprietary)

1. The District has standardized on Cisco Meraki Cloud managed CCTV system. Provide all required licenses, software and firmware upgrades as required to add the cameras installed as part of this project to the existing district cloud based system.
2. Provide cameras with the following specifications for all outdoor fixed cameras as shown on the drawings.
   a. Manufacturer:
      1) Proprietary - Cisco model; MV72 Outdoor Varifocal Camera
   b. Camera
      1) 1/3" 4MP (2688x1520) progressive CMOS image sensor
      2) 256GB high endurance solid state storage
      3) 3-9mm focal length
      4) f/1.2-2.3 aperture

5) Field of view:
   a) Horizontal 36° - 112°
   b) Vertical 20° - 57°
   c) Diagonal 42° - 138°
6) Lens adjustment range:
   a) Tilt: 65°
   b) Rotation: +/- 90°
   c) Pan: 354°
7) 1/30s to 1/32,000s shutter speed
8) Minimum illumination 0.18 Lux (standard recording) and 0.01 Lux (night mode)
9) Built-in IR illuminators, effective up to 30m (98ft) Heating elements

c. Video
1) 1080p HD video recording (1920x1080) with H.264 encoding, up to 20fps
2) Cloud augmented edge storage (locally stored video with metadata in the cloud)
3) Optimized retention settings (scheduling and motion-based) for variable retention
4) Up to 40 days of 24/7 continuous video storage per camera*
5) Direct live streaming with no client software (native browser playback)**
6) Stream video anywhere with automatic cloud proxy
7) High dynamic range (HDR)

d. Data Security
1) Full disk encryption (AES 256-bit)
2) Automatically purchased and provisioned TLS certificates (publicly-signed)
3) Management encryption and two-factor authentication

e. Networking
1) 1x 10/100/1000 Base-T Ethernet (RJ45)
2) Dual band WLAN with antenna diversity supporting 2.4GHz and 5GHz
3) 802.11 a/b/g/n/ac
4) DSCP traffic marking

f. Power
1) Power consumption when not using heater 12.95W maximum via 802.3af PoE
2) Power consumption when using heater 25.5W maximum via 802.3at PoE

g. Features
1) Cloud managed with complete integration into the Meraki dashboard
2) Plug and play deployment with self-configuration
3) Dynamic day-to-night transition with IR illumination
4) Noise optimized motion indexing engine with historical search
5) Shared video wall with individual layouts supporting multiple cameras
6) Selective export capability with cloud proxy (with watermarked timestamps)
7) Highly granular view, review, and export user permissions with SAML integration
8) Motion heat maps for relative hourly or day-by-day motion overview

9) Motion alerts

h. Wireless
1) 2.4 GHz 802.11b/g/n radio
2) 5 GHz 802.11a/n/ac radio
3) Supported frequence bands (country-specific restrictions apply):
a) 2.412 - 2.484 GHz
b) 5.150 - 5.250 GHz (UNII-1)
c) 5.250 - 5.350 GHz (UNII-2)
d) 5.470 - 5.600, 5.660 - 5.725 GHz (UNII-2e)
e) 5.725 - 5.825 GHz (UNII-3)

i. 802.11ac and 802.11n Capabilities
1) 1x1 with one spatial stream
2) MU-MIMO support
a) 20 and 40 MHz channels (802.11n)
b) 20, 40, and 80 MHz channels (802.11ac)
3) Up to 256 QAM on both 2.4 GHz and 5 GHz bands

j. Antenna
1) Integrated omni-directional antennas (4.4 dBi gain at 2.4 GHz, 6.3 dBi gain at 5 GHz)

k. Security
1) WPA, WPA2-PSK, WPA2-Enterprise with 802.1X
2) EAP-TTLS
3) TKIP and AES encryption

l. Environment
1) Temperature: -40°C - 50°C (-40°F - 122°F)***

m. In the Box
1) Quick start & installation guide
2) MV camera hardware
3) Wall mounting kit
4) Junction box adapter plate

n. Physical Characteristics
1) Dimensions 165mm x 103mm (diameter x height)
2) Varifocal lens (up to 3x optical zoom)
3) Weight without mounting plate 1247g
4) Weight with mounting plate 1353g
5) Female RJ45 Ethernet connector
6) Multicolor, multifunction status LED
7) Reset button

o. Ratings
1) IK10 vandal-resistance
2) IP67 weather-proofing

p. Warranty
1) Warranty 3-year hardware warranty with advanced replacement

C. Provide cameras with the following specifications for all indoor fixed cameras as shown on the drawings.

a. Manufacturer:
   1) Proprietary - Cisco model; MV22 Indoor Varifocal Camera

b. Camera
   1) 1/3" 4MP (2688x1520) progressive CMOS image sensor
   2) 256GB high endurance solid state storage
   3) 3-9mm focal length
   4) f/1.2-2.3 aperture
   5) Field of view:
      a) Horizontal 36° - 112°
      b) Vertical 20° - 57°
      c) Diagonal 42° - 138°
   6) Lens adjustment range:
      a) Tilt: 65°
      b) Rotation: +/- 90°
      c) Pan: 354°
   7) 1/30s to 1/32,000s shutter speed
   8) Minimum illumination 0.18 Lux (standard recording) and 0.01 Lux (night mode)
   9) Built-in IR illuminators, effective up to 30m (98ft)

c. Video
   1) 1080p HD video recording (1920x1080) with H.264 encoding, up to 20fps
   2) Cloud augmented edge storage (locally stored video with metadata in the cloud)
   3) Optimized retention settings (scheduling and motion-based) for variable retention
   4) Up to 40 days of 24/7 continuous video storage per camera*
   5) Direct live streaming with no client software (native browser playback)**
   6) Stream video anywhere with automatic cloud proxy
   7) High dynamic range (HDR)

d. Data Security
   1) Full disk encryption (AES 256-bit)
   2) Automatically purchased and provisioned TLS certificates (publicly-signed)
   3) Management encryption and two-factor authentication

e. Networking
   1) 1x 10/100/1000 Base-T Ethernet (RJ45)
   2) Dual band WLAN with antenna diversity supporting 2.4GHz and 5GHz
   3) 802.11 a/b/g/n/ac
   4) DSCP traffic marking

f. Power
   1) Power consumption 12.95W maximum via 802.3af PoE

g. Features
   1) Cloud managed with complete integration into the Meraki dashboard
   2) Plug and play deployment with self-configuration
   3) Dynamic day-to-night transition with IR illumination

4) Noise optimized motion indexing engine with historical search
5) Shared video wall with individual layouts supporting multiple cameras
6) Selective export capability with cloud proxy (with watermarked timestamps)
7) Highly granular view, review, and export user permissions with SAML integration
8) Motion heat maps for relative hourly or day-by-day motion overview
9) Motion alerts

h. Wireless
1) 2.4 GHz 802.11b/g/n radio
2) 5 GHz 802.11a/n/ac radio
3) Supported frequence bands (country-specific restrictions apply):
a) 2.412 - 2.484 GHz
b) 5.150 - 5.250 GHz (UNII-1)
c) 5.250 - 5.350 GHz (UNII-2)
d) 5.470 - 5.600, 5.660 - 5.725 GHz (UNII-2e)
e) 5.725 - 5.825 GHz (UNII-3)

i. 802.11ac and 802.11n Capabilities
1) 1x1 with one spatial stream
2) MU-MIMO support
a) 20 and 40 MHz channels (802.11n)
b) 20, 40, and 80 MHz channels (802.11ac)
3) Up to 256 QAM on both 2.4 GHz and 5 GHz bands

j. Antenna
1) Integrated omni-directional antennas (4.4 dBi gain at 2.4 GHz, 6.3 dBi gain at 5 GHz)

k. Security
1) WPA, WPA2-PSK, WPA2-Enterprise with 802.1X
2) EAP-TTLS
3) TKIP and AES encryption

l. Environment
1) Temperature: 0°C - 45°C (32°F - 113°F)

m. In the Box
1) Quick start & installation guide
2) MV camera hardware
3) Wall mounting kit
4) Junction box adapter plate

n. Physical Characteristics
1) Dimensions 149mm x 97mm (diameter x height)
2) Varifocal lens (up to 3x optical zoom)
3) Weight without mounting plate 706g
4) Weight with mounting plate 842g
5) Female RJ45 Ethernet connector
6) Multicolor, multifunction status LED
7) Reset button

o. Ratings
1) IK08 vandal-resistance

p. Warranty
1) 3 year hardware warranty with advanced replacement

q. Ordering Information
   1) MV22-HW: Varifocal MV22 Indoor HD Dome Camera With 256GB Storage
   2) LIC-MV-XYR: Meraki MV Enterprise License (X = 1, 3, 5, 7, 10 years)
   3) MA-INJ-4-XX: Meraki 802.3at Power over Ethernet injector (XX = US, EU, UK, or AU)
   4) MA-PWR-MV-LV: Low voltage 12VDC/24VAC input PoE injector for MV cameras (coax converter)

2. Provide cameras with the following specifications for all 360 degree fixed cameras as shown on the drawings.
   a. Manufacturer:
      1) Proprietary - Cisco model; MV32 360 degree viewing Camera
   b. Camera
      1) 1/2.5” 8.4MP (4.2MP effective) progressive CMOS image sensor
      2) 256GB high endurance solid state storage
      3) 1.19mm focal length fixed lens
      4) f/2.0 aperture
      5) Field of view:
         a) Horizontal 180°
         b) Vertical 180°
      6) 1/30s to 1/32,000s shutter speed
      7) Minimum illumination 0.18 Lux
   c. Video
      1) 4.2MP (2058x2058) 360° overview with H.264 encoding, up to 15fps
      2) 1MP (1080x1080) 360° overview with H.264 encoding, up to 8fps
      3) Cloud augmented edge storage (locally stored video with metadata in the cloud)
      4) Optimized retention settings (scheduling and motion-based) for variable retention
      5) Up to 20 days of 24/7 continuous video storage per camera*
      6) Direct live streaming with no client software (native browser playback)**
      7) Stream video anywhere with automatic cloud proxy
      8) High dynamic range (HDR)
   d. Data and Network Security
      1) Full disk encryption (AES 256-bit)
      2) Automatically purchased and provisioned TLS certificates (publicly-signed)
      3) Management encryption and two-factor authentication
      4) Wireless security:
         a) WPA, WPA2-PSK, WPA2-Enterprise with 802.1X EAP-TTLS
         b) TKIP and AES encryption
   e. Networking and Wireless
      1) 1x 10/100/1000 Base-T Ethernet (RJ45)
      2) DSCP traffic marking
      3) Supported frequence bands (country-specific restrictions apply):
      4) 2.4 GHz 802.11b/g/n radio
         a) 2.412 - 2.484 GHz
      5) 5 GHz 802.11a/n/ac radio
         a) 5.150 - 5.250 GHz (UNII-1)
         b) 5.250 - 5.350 GHz (UNII-2)

c) 5.470 - 5.600, 5.660 - 5.725 GHz (UNII-2e)
d) 5.725 - 5.825 GHz (UNII-3)
6) 1x1 with one spatial stream
7) MU-MIMO support
a) 20 and 40 MHz channels (802.11n)
b) 20, 40, and 80 MHz channels (802.11ac)
8) Up to 256 QAM on both 2.4 GHz and 5 GHz bands
9) Integrated omni-directional antennas (4.4 dBi gain at 2.4 GHz, 6.3 dBi gain at 5 GHz)

f. Power
1) Power consumption 12.95W maximum via 802.3af PoE

g. Environment
1) Temperature: 0°C - 40°C (32°F - 104°F)

h. Physical Characteristics
1) Dimensions 106mm x 45.86mm (diameter x height)
2) Weight 215g Female RJ45 Ethernet connector
3) Multicolor, multifunction status LED
4) Reset button

i. Warranty
1) Warranty 3 year hardware warranty with advanced replacement

j. Ordering Information
1) MV32-HW: 256GB Indoor Fisheye Camera
2) LIC-MV-XYR: Meraki MV Enterprise License (X = 1, 3, 5, 7, 10 years)
3) MA-INJ-4-XX: Meraki 802.3at Power over Ethernet injector (XX = US, EU, UK, or AU)
4) MA-PWR-MV-LV: Low voltage 12VDC/24VAC input PoE injector for MV cameras

k. In The Box
1) Quick start & installation guide
2) MV camera hardware
3) Wall mounting kit

3. Provide all required mounting accessories for CCTV cameras.

a. Wall Mount Arm for MV72
1) Wall mount for attaching camera perpendicular to mounting surface
2) Includes pendant cap
3) Supported Models: MV72
4) Dimensions (wall bracket) 160.0mm L x 104.0mm W x 286.0mm D
5) Combined weight: 0.67kg
6) MA-MNT-MV-10

b. Pole Mount

c. Can be used in conjunction with MA-MNT-MV-10 Wall Mount Arm

d. Supported Models: MV72

e. Dimensions: 163.5mm L x 107.6mm W x 34.0mm D

f. Combined weight: 0.289kg

g. MA-MNT-MV-20

4. Wall Mount Arm for MV12
    a. Wall mount arm for attaching camera perpendicular to mounting surface Includes pendant cap
    b. Supported Models: MV12
    c. Dimensions (wall bracket): 91.3mm L x 94.0mm W x 302.3mm D
    d. Combined weight: 0.697kg
    e. MA-MNT-MV-30
5. Wall Mount Bracket
    a. Support models: MV22
    b. Dimensions: 48.0mm L x 130.0mm W x 156.2mm D
    c. Combined weight 0.503kg
    d. MA-MNT-MV-31

D. Exterior Camera Fiber Transceivers
1. Provide fiber optic transceivers for all pole mounted and remote building mounted cameras. Transceivers shall be located at the base of the pole in a NEMA rated heated enclosure.
2. Provide American Fibertek MX2-MM-FX or equal media converters as required for each camera. Transmitter shall be located in NEMA rated enclosure at the pole. Receiver shall be located in the security rack.
3. Provide Altronix T2428100WP or equal outdoor rated power supply for each camera, located at the pole. Power supply shall be located in NEMA 3R rated lockable enclosure at the pole.

E. Reader and Input/Output (I/O)Control Panels
1. General
    a. The control panels include but no limited to card reader modules, input modules, output modules, power supply, harnesses, and batteries. Provide quantities as required for a complete working system. Each module card shall be neatly installed in a locked wall cabinet. Enclosures shall be located in each IDF/MDF or as shown on the drawings. Each controller shall be connected to the security network switch. Provide Hoffman enclosures or approved equal.
2. Provide Mercury Security Corp. EP1502 with two reader interface intelligent controller.
3. Provide Mercury Security Corp. MR52 reader interface.
4. Provide Mercury Security Corp. 16 door power supply AC-LSP-16DR-MER.
5. Provide HID VertX series or approved equal. Provide with wall mounted cabinet and locking front door equal to Hoffman.

F. Combination Card Reader and Keypad
1. Provide contactless smart card readers with keypad as shown on the drawings.
2. Each reader shall operate on a 13.56 transmit frequency.
3. The reader shall have a Weigand output.

4. The readers shall have both an audio and visual notification for access granted and access denied.
5. The reader shall be suitable for indoor and outdoor applications.
6. The reader shall operate up to 500ft on 22AWG cable.
7. The reader shall be able to communicate with either 2K, 16K or 32K bit iClass cards.
8. Provide HID SE RK40 iClass readers.

G. Contactless Printable Smart Cards

1. Provide HID iClass Card model HID – CARD- iCLASS – SE-3000 iCLASS SE 2kbit white numbered.
2. Provide 100.

H. Door Contacts

1. Furnish and install 3/4 in. recessed magnetic door contacts as shown on the drawings.
2. Provide Sentrol/GE 1078C or equal unless noted below.
3. Provide DPDT contacts for all exterior doors which have a card reader. The second pole will be wired and connected to the intrusion alarm system. Provide Sentrol/GE model #1076-D or approved equal.

I. Request-to-exit devices

1. Furnish and install motion request-to-exit sensors as shown on the drawings and as required. Devices shall mount directly above the each door. Utilize doors that have hardware which have integral request-to-exit switches as required. Coordinate with door hardware.
2. Provide DS 150i or approved equal with trim plate.

J. Auxiliary Power Supply

1. Provide auxiliary power supply(s) for REX sensors as required. Provide Altronix or approved equal.

K. Electric strike/magnetic locks power supply

1. Furnished by hardware installed and wired by Electrical SubContractor. Security Interface by IESS SubContractor.
2. Fire Alarm interface by Electrical SubContractor.
3. Provide coordination with door hardware contractor.
4. Power supplies shall be interfaced to the fire alarm system as required.

L. Locking Devices (Electric strike/Magnetic locks/Electric locks/Electric Hinges locking hardware power supplies)

1. Furnished and installed by others. Wired by security Subcontractor.

M. Beacons

1. Provide blue security beacons as shown on the drawings. The unit shall wall or ceilings mount. The unit shall be 12/24 VDC and wired to the security management system.

N. Duress Stations

1. Provide remote duress red mushroom push button as shown on the drawings. The device shall be designed for high security applications and shall be vandal proof. Each duress button shall be wired to the USP for camera call-up and general alarm conditions. Each button shall report and be programmed independently of one another.
2. Provide Rauland HSS8 or approved equal.

O. UPS Units

1. Furnish and install UPS units for the complete Integrated Security systems as specified herein. UPS units shall be sized to support all equipment as specified herein for a minimum of 15 minutes. Provide calculations as required.
2. Each UPS units shall be located in the MDF room and IDF closets.
3. Material
   a. Each UPS shall have the following specifications.
   b. Up to .8 power factor (in watts)
   c. Independent battery pack chargers
   d. Simultaneous RS-232, USB and SNMP communications
   e. Monitoring and control software capable
   f. Front panel display with status indicators
   g. Hot swappable batteries
4. Provide Minuteman Endeavor ED series or approved equal.

2.9 INTRUSION ALARM SYSTEM

A. Intrusion Alarm Control Panel

1. Provide an intrusion system as required and as shown on the plans. The cost of monitoring the facility at a UL listed central station shall be included for a period of one year.
2. Provide Cellular service for virtual key pad application remote control for a period of 1 year.
3. The intrusion alarm panel shall be fully integrated to the S2 access control system and shall be a listed partner.
4. Provide all labor, materials, equipment, and services to perform all operations required for the complete installation and related work as shown in all contract documents.
5. All motion detectors, roof hatches and exterior doors shall report and be individually annunciated on the intrusion alarm system. For locations that are exterior access control doors, each door contact shall be double pole, double throw. One pole shall be wired to the intrusion alarm system and the other shall be wired to the access control system and programmed in accordance with the access control specification. Each exterior door shall be wired and individually reported to the intrusion alarm system.
6. Keypads shall be able to arm and disarm the intrusion alarm system
7. Once armed, any motion detector, door contact, glass break, etc shall both cause the audible sounder to sound and call the central station.

8. The control panel shall be capable of supporting Dynamic Host Communication Protocol (DHCP) Internet Protocol (IP) addressing.
9. The control panel shall be capable of two-way network communication using standard Ethernet 10BaseT in a LAN, WAN, or Internet configuration.
10. Provide Virtual keypad application for remote arming/disarming and monitoring of the intrusion system.
11. Provide an addressable intrusion alarm control panel complete with enclosure, power supply, door lock, etc.
12. The panel must support up to 500 addressable points.
13. The panel must be able to support 16 independent partitions.
14. Provide with battery back up and battery harness for a minimum of 4 hours.
15. Provide DMP XR550 series or approved equal.

B. Intrusion Alarm Keypad

1. Provide 32 character platinum keypad as shown on the drawings.
2. The keypads can be used to both arm and disarm the intrusion system.
3. Provide DMP 7060A-P or approved equal.

C. PIR Motion Detectors

1. Provide motion detectors of "home run" type as shown on the drawings. Sensors shall process their signals independently and shall have coverage patterns individually adjustable.
2. Each PIR shall be wired to the intrusion alarm system.
3. Provide long range detectors as shown on the plans and as required.
4. Wiring connections shall be made in equipment cabinets. Conductors other than that of detector will not be allowed at each device. Detectors shall not be wired in series or with door contacts. There shall be no exposed wiring leading to/from detectors.
5. Catalog, model and type numbers itemized herein for motion detectors are those of DMP.
6. Detectors shall be mounted on ceiling type wiremold box.
7. Fields of view that are directed at heat sources such as fans, radiators and other areas that may cause false alarms shall be masked out.
8. Provide DMP models 6155LX, AP750, FX series, KX-08, and SX-360Z or approved equal.
9. Provide one (1) addressable input module per motion, DMP 700 series or approved equal.

D. Door Contacts/switches

1. Provide recessed door contacts/switches as shown on the drawings. Contacts shall be 3/4 inch and have wire leads of sufficient length for splices to be made in wiremold box or mud type box located adjacent to door. Provide GE model #1078C or approved equal for interior doors. Provide DPDT contacts for all exterior doors, GE model #1076-D or approved equal.
2. In event that circumstances prevent the use of recessed contacts in some locations, surface contacts may be used, subsequent to approval of Architect.

3. Wiring for door contacts shall be concealed.
4. Door contacts shall not be wired in series with exception of double doors which may be wired to panel as single door location.
5. There shall be no splices in door frames or jambs. Door contact connections shall be made in wiremold or mud switch box located adjacent to door.
6. Provide one (1) addressable input module per door contact.

E. Overhead Door
1. Overhead door contact as shown on the drawings. Provide one (1) input module per device.
2. Provide Sentrol 2200 series or approved equal.

F. Glass Break Detectors.
1. Provide glass break detectors as shown on the drawings. Provide one (1) input module per device.
2. Provide DMP 5812A or approved equal.

G. Addressable Input Module
1. Provide single input module devices for all non-addressable inputs (motions, door contacts, glass break detectors, duress button, etc).
2. Provide DMP 700 series or approved equal.

H. Indoor Security Siren.
1. Provide interior security siren(s) as shown on the drawings.
2. Provide DMP 335 or approved equal.

I. Outdoor Security Siren:
1. Provide outdoor siren(s) as shown on the drawings. The horn shall draw 550ma at 12VDC.
2. Provide Ademco 748LC or approved equal.

J. Provide Virtual Keypad application

K. Provide virtual Keypad browser

L. Intrusion Alarm Panel Accessories and Modules
1. Interface Adapter Module. Provide DMP XR550 or equal
2. Loop/Zone expansion interface card. Provide a minimum of two (2) expansion cards per system. Provide a sufficient amount of zone cards to handle 574 points as required. Provide DMP 481 zone or approved equal.
3. Dual Phone Line Module. Provide one (1) DMP 893A module or approved equal per system.
4. Eight Input Module. Provide one (1) DMP 712-8 module or approved equal per system.
5. Zone Expansion Module. The individual zone expansion module shall be used to monitor door contacts, motion detectors, glass break detectors, and other monitor points. Provide one (1) DMP 711 module or approved equal per device as required.

6. Relay Output Module. Provide one (1) DMP 860 relay output module or approved equal per system. Provide with four (4) relays.

M. Provide Cellular communicator DMP 263LTE series or equal

N. Central Station Monitoring: Provide monitoring at a UL Listed central station for a period of one year.

2.10 EXTENDED SERVICE AND PREVENTATIVE MAINTENANCE AGREEMENT

A. General

1. The Systems Integrator shall supply a one year service and preventive maintenance agreement. The owner shall have the option to renew the agreement upon expiration.
2. The agreement must be provided by the Systems Integrator which provided and installed the entire Integrated Security System.
3. Equipment warranty shall be provided for a period of one year as described elsewhere within the specification.
4. Remote monitoring of the Intrusion Alarm system at a UL Listed Central station.
5. Access to 24/7/365 phone support. A technician will be
6. dispatched the next day of when the service call was placed.
7. A technician will be dispatched within 4 hours of when the call was placed for an emergency service call. Emergency service is defined as any one of the following: Video Server/ Video Workstation/Access Control Server/Access Control workstation fails, corridor camera/photo badge reader/card reader/intrusion panel or intrusion alarm keypad does not work.
8. A technician will be dispatched within 24 hours of when the call was placed for a normal service call.
9. Provide the client with 48 hours notice of arriving for all preventative maintenance work. And provide a one hour notice prior to arrival for all preventative maintenance work.
10. Provide the client a written report explaining the scope of the service call within 48 hours after completing the service call.

B. Preventative Maintenance

1. Upon a monthly basis:
   a. Reboot all Video servers. Verify all cameras are properly reporting and recording. Verify all workstations are reporting and working properly.
   b. Provide written report to end user stating the above is working properly.
2. Upon a quarterly basis:
   a. Inspect CCTV Cameras. Verify Camera Field of View and Focus.
   b. Verify Cameras are viewing the desired image by the customer.
   c. Check System Alarm and Event Logs.
   d. Verify Camera Programming, Naming, Image Quality Settings and Recording Settings.
   e. Verify System is Recording and Note Retention Period.

f. Verify Recording Hard Drive Configuration and Status. Check for Drive Failures or Bad Sectors.

g. Verify Motion Detection Recording Settings. Verify all cameras are capturing the expected Motion Activity. Note any discrepancies.

h. Verify PTZ Control of applicable Cameras. Check Presets, Tours and Home Position Settings.

i. Verify all channels of the Video Encoder (s) are working properly.

j. Provide Microsoft Window updates to each Security Workstation.

k. Verify network switch utilization and network switch ports are functioning.

l. Check Access Control Panel / Controller Communications Status.

m. Check Access Control Panel / Controller Batteries. Note Battery Type, Voltage, Amp-Hour Rating and Date Code. Test and Note Battery Voltage.

n. Inspect Door Hardware for Operation, Damage & Mis-Alignment.

o. Inspect and Test Operation of Access Control Equipment at each Door [Card Readers, Door Contacts, REX & Door Release Push Buttons where applicable].

p. Test Operation of Ancillary Access Control Inputs and Outputs.

q. Check System Alarm and Event Logs. Attach a printed copy of the logs if applicable.

r. Verify Camera Call-Up upon Event / Alarm where applicable.

s. Verify Door Programming, Time Schedules, Access Levels and Door Unlock Schedules. Note programming operation.

t. Verify Photo Badge Reader and Workstation Photo-ID Call-up Operation.

u. Verify System Time of Day is configured and is synchronizing with a time server or consistent source.

v. Verify and Note Current Software Version and Device Firmware Versions.

w. Verify Client and Server Computer Hardware Specifications. Verify CPU, Memory & Network Utilization. Note Performance Stats. Perform Reboot of all Computers and verify system back-online and note any changes in performance stats.

x. Verify Access Control System Database is configured for a regular back-up.

y. Check each Intrusion motion detector, intrusion door contact, glass break device, duress button and keypad to verify its working properly.

z. Provide written report to end user stating the above is working properly.

3. On an annual basis:

   a. Notify the owner of any new USP software upgrades/updates/patches which are available. Install upgrades/updates/patches as approved by the owner.

4. Hardware Support

   a. The Systems Integrator shall perform scheduled maintenance services on all systems and equipment as specified in this section.

b. Components and parts that are found to be defective, have failed operationally or which exhibit signs of near term failure will be identified during each preventive maintenance inspection or test. If the component or part is covered under a current Systems Integrator or factory warranty, said part or component will be replaced at no charge to CUSTOMER including labor during normal business hours.

c. For any equipment requiring repair or replacement that is not covered, an estimate will be prepared and submitted for approval on a reimbursable basis and repair authorization shall be issued in writing by an authorized representative of the CUSTOMER before proceeding with the work.

5. Response Time

a. Should an emergency arise, the Systems Integrator personnel will assess the situation either by phone or remote diagnostics, or both, and will determine the required course of action with the CUSTOMER.

b. On-Site Response Time: If it is determined that a site visit is required, the Systems Integrator personnel will arrive at the affected premises within four (4) hours of the request of the CUSTOMER.

c. If the resolution of the emergency service call requires the Systems Integrator to provide service for equipment that is not listed in this specification section, CUSTOMER will be liable for charges and expenses prevailing for such service.

d. Emergency Service will be provided during the following periods.

1) Provide Emergency Service Monday through Friday 8:00 AM – 5:00PM excluding evenings and weekends, city, state, federal and Systems Integrator observed holidays at no additional charge to the base annual service fee. Labor for travel time is included under this Agreement. The Systems Integrator will provide a response time as stated and agreed to above. Emergency Service requested by the CUSTOMER to be provided outside of the above stated times will be reimbursed by the CUSTOMER as shown below.

e. Emergency Service during the following periods is not included.

1) Emergency Service Monday through Friday 5:00PM – 8:00AM, weekends, city, state, federal and Systems Integrator observed holidays are not included. Emergency Services provided under this scope will be reimbursable by the CUSTOMER to the Systems Integrator at then current Systems Integrator published service labor rates and standard service charges (Minimum Labor Charge, Vehicle Charges, Round Trip Travel Time, Mileage, etc.

2.11 INTEGRATED COMMUNICATION AND DOOR SYSTEM

A. SECTION INCLUDES

1. IP Video Intercom. (Aiphone IX Series 2)

B. RELATED SECTIONS

1. Section - 260000

C. REFERENCES

1. American National Standards Institute (ANSI/TIA/EIA) 568 - Commercial Building Telecommunications Cabling Standard.

2. International Organization for Standards (ISO) 9001:2000 - Quality Management Systems - Requirements.

D. SYSTEM DESCRIPTION

1. IP Network Compatible Video Intercom System: A network-based communication and security system featuring video entry security, internal communication, emergency stations, and paging. All units and app in the systems shall be able to unlock doors remotely on a network, assist onsite visitors from an offsite location, broadcast emergency announcements, and communicate using a PoE network.
2. Power Source: Power over Ethernet (802.3af).
3. Network Interface: 10 BASE-T / 100 BASE-TX Ethernet (RJ-45).
4. Network Protocols: IPv4, IPv6, TCP, UDP, SIP, HTTP, HTTPS, MJPEG, RTSP, RTP, RTCP, IGMP, MLD, SMTP, DHCP, NTP, DNS.
5. Bandwidth Usage:
   a. G.711: 64Kbps x 2 per video call.
   b. 64Kbps per monitor.
   c. H.264: 24Kbps ~ 2,048Kbps.
6. Communication: Hands-free (VOX), push-to-talk (simplex), or handset (full-duplex).
7. Video Display: 7 inch color LCD.
8. Camera: Type:
   a. 1/3 inch color CMOS. 1.23 Megapixels.
   b. View Area at 0 degree camera angle mounted at 4 feet 11 inches (1500 mm) AFF: 2 feet 3 inches (700 mm) vertical x 3 feet 9 inch (1150 mm) horizontal at 19 inches (500 mm).
9. Video Stream: ONVIF Profile S.
10. Door Release: Programmable Form C dry contact, 24V AC/ DC, 500mA - use EL-12S (use RY-24L for larger contact rating, which requires 24V DC power supply) or use RY-IP44 with 4 multipurpose relays.
11. Wire Type: CAT-6A.
12. Distance:
    a. Any Station to Network Node: 330 feet (100 meters).

E. SYSTEM INTEGRATION

1. A requirement of this project is the integration of each SIP intercom station to the customers Cisco Unified Communications Call Manager (CUCM) telephone system.
   a. Provide support tool
   b. Create list of each IX series station's MAC address with station number and name included.
   c. Enable the call manager service of (CUCM)
   d. Get the license key for the station to register and register with Enterprise License Manager.
   e. Login to CUCM and create a security profile.

f. Register each user.

g. Add CUCM support tool.

h. Configure the call button to call handsets as required by the owner.

F. SUBMITTALS

1. Submit under provisions of Section 01 33 00 – Submittal Procedures.
2. Product Data: Manufacturer's data sheets on each product to be used, including:
   a. Preparation instructions and recommendations.
   b. Storage and handling requirements and recommendations.
   c. Installation methods.
3. Shop Drawings: Submit the following:
   a. Wiring Diagrams: Indicate wiring for each item of equipment and interconnections between items of equipment.
   b. Include manufacturer's names, model numbers, ratings, power requirements, equipment layout, device arrangement, complete wiring point-to-point diagrams, and conduit layouts.
4. Installation and Operation Manuals:
   a. Submit manufacturer's installation and operation manual, including operation instructions and component wiring diagrams.
   b. Provide detailed information required for Owner to properly operate equipment.
5. Warranty: Submit manufacturer's standard warranty.
6. Selection Samples: For each finish product specified, two complete sets of color chips representing manufacturer's full range of available colors and patterns.
7. Verification Samples: For each finish product specified, two samples, minimum size 6 inches (150 mm) square, representing actual product, color, and patterns.

G. QUALITY ASSURANCE

1. Manufacturer Qualifications: ISO 9001:2008 certified company.
2. Installer Qualifications: Factory trained and experienced with system installations of scope and size required for the Project.
3. Mock-Up: Provide a mock-up for evaluation of surface preparation techniques and application workmanship.
   a. Finish areas designated by Architect.
   b. Do not proceed with remaining work until workmanship is approved by Architect.
   c. Refinish mock-up area as required to produce acceptable work.

H. DELIVERY, STORAGE, AND HANDLING

1. Delivery: Deliver materials to site in manufacturer's original, unopened containers and packaging, with labels clearly identifying product name and manufacturer.

2. Storage: Store materials in clean, dry area indoors in accordance with manufacturer's instructions.
3. Handling: Protect materials during handling and installation to prevent damage.

I. PROJECT CONDITIONS

1. Maintain environmental conditions (temperature, humidity, and ventilation) within limits recommended by manufacturer for optimum results. Do not install products under environmental conditions outside manufacturer's absolute limits.

J. MANUFACTURERS

1. IP Video Intercom System: IX Series 2 Intercom System as manufactured by Aiphone Corporation,
2. 2N IP force
3. or equal.

K. SYSTEM DESIGN

1. Quantities as shown on drawings and as required for a complete and operational system.
2. Master Station(s): Provide master stations as shown on the contract documents.
3. Audio Video Door Stations:
   a. Model IX-DF with SBX-ISDVF
   b. Model IX-DF
4. Audio Only Door Stations:
   a. Model IX-SS with SBX-ISDVF - Surface Mount
   b. Model IX-SS - Flush Mount
5. Provide Selective Door/Gate Release.
6. Provide Audio/video streaming via ONVIF Profile S.
7. Provide ONVIF Profile S camera input (max 50).
8. Provide Overhead paging.
9. Provide Contact input at door station.
10. Provide IX Mobile for a quantity of 8 users. IX Mobile can receive and place calls, have two-way communication, view video and release doors. Four programmable speed dial buttons allow direct station calling, monitoring, or paging. Provide IXW-MA mobile app server.

L. FUNCTIONAL COMPONENTS:

1. As indicated on the drawings or as required to complete system.
   a. Video Master Station Model IX-MV7:
      1) An IP addressable video master station with a 7 inch color LCD monitor. It can be wall or desk mounted (desk stand included). The IX-MV7 offers handset (duplex) and hands-free (VOX/PTT) communication and call up to 500 other IX stations. It connects

directly to a network using CAT-5e/6 cable. This station requires a 802.3af compliant Power-over-Ethernet network.

b. Provide Model IX-DVF (Video Door Station - Flush Mount - Hands Free)

c. IXW-MA IP Programmable Relay Adaptor: Multi-purpose adaptor - PoE - screen only.

d. 2-Wire Network Adapter Model IX-1AS:

One 2-wire input with 2 built-in contact outputs; door release and camera call-up. Powered via PoE, Compatible with Aiphone's LE and NE series audio door or substations for connection to Video Master Station Model IX-MV7 over a network.

e. Wire Network Adapter Model IX-10AS (Ten IX-1AS adaptors in a rack mounted enclosure):

Ten 2-wire inputs with ten, 2 built-in contact outputs; door release and camera call-up. Powered via PoE, Compatible with Aiphone LE and NE series audio door or substations for connection to Video Master Station Model IX-MV7 over a network.

f. RY-IP44 IP Programmable Relay Adaptor:
   1) With 4 contact inputs and 4 relay outputs (compatible with the IX Series, IS-IP Series, and IPW-1A only).

g. 2-Wire Network Adapter Model IX-1AS:
   1) One 2-wire input with 2 built-in contact outputs; door release and camera call-up. Powered via PoE, Compatible with Aiphone's LE and NE series audio door or substations for connection to Video Master Station Model IX-MV over a network.

h. Wire Network Adapter Model IX-10AS (Ten IX-1AS adaptors in a rack mounted enclosure):
   1) Ten 2-wire inputs with ten, 2 built-in contact outputs; door release and camera call-up. Powered via PoE, Compatible with Aiphone's LE and NE series audio door or substations for connection to Video Master Station Model IX-MV over a network.

i. Network Paging Adapter Model IX-PA:
   1) Address book that supports up to 50 stations and can be connected to 3rd party devices. Can be accessed by an IX-MV master station or an instance of the IX Mobile App to allow messages to be broadcast through the IX-PA 600u or 8u output. A 3rd party device can be connected to the audio input to send messages to the paging adaptor's address book.

j. Stainless Steel Enclosure Model SBX-ISDVF:
   1) 18-Guage stainless steel enclosure designed for surface mounting the IX-DF, IS-SS, IX-DF-HID, and IX-DF-RP10 door stations.

k. Stainless Steel Enclosure Model SBX-ISDVFRA:
   1) 18-Guage stainless steel enclosure designed for surface mounting the IX rescue assistance subs. Compatible with the IX RA stations.

M. EXAMINATION

1. Examine areas to receive integrated security and communication system.
2. Notify Architect of conditions that would adversely affect installation or subsequent use.

3. Do not begin installation until unacceptable conditions are corrected.

N. PREPARATION

1. Verify the following compliance before starting installation.
   a. The unit turns inoperative during power failure.
   b. Keep the intercom wires at least 1 foot (30 cm) away from strong electrical wiring (AC 100-240 V) including, in particular, wiring for inverter electrical appliances. Noise and malfunction could result.
   c. If a strong light shines on the main unit screen, the picture may turn white or only silhouettes will be visible.
   d. Other manufacturer's devices (such as sensor, detectors, door releases) used with this system, comply with the manufacturer's installation requirements.
   e. The LCD panel is manufactured with very high precision techniques, inevitably will have a very small portion of its picture elements always lit or not lit at all. This is not considered a unit malfunction. Please be aware of this in advance.

O. INSTALLATION

1. Install integrated security and communication system in accordance with manufacturer's instructions at locations indicated on the Drawings.
2. Mount equipment plumb, level, square, and secure. For video entrance stations and video door stations, comply with manufacturer's design requirements to provide optimum picture quality of station monitoring.

P. SET-UP AND ADJUSTING

1. Adjust integrated security and communication system for proper operation in accordance with manufacturer's instructions.

Q. DEMONSTRATION AND TRAINING

1. Demonstration:
   a. Demonstrate that integrated security and communication system functions properly.
   b. Perform demonstration at final system inspection by qualified representative of manufacturer.

R. Instruction and Training:

1. Provide instruction and training of Owner's personnel as required for operation of integrated security and communication system.
2. Provide hands-on demonstration of operation of system components and complete system, including user-level program changes and functions.
3. Provide instruction and training by qualified representative of manufacturer.

S. PROTECTION

1. Protect installed integrated security and communication system from damage during construction.

2.12 IESS INTEGRATION

A. Interface and Integration between Access Control, CCTV, Intrusion Alarm, Public Address, and Telephone System.

1. Access Control System Keypads, Readers, etc. shall provide ability to Arm and Disarm the entire Intrusion Alarm System or specific zones.
2. Access Control System Keypads, Readers, etc. shall provide ability to Arm and Disarm any individual areas in the Intrusion Alarm System.
3. Intrusion Alarm System devices (i.e. motion sensors, door contacts, glass break detectors, etc.) shall be graphically displayed on the Access Controls System's browser based Graphical Designer software for display on associated PC Workstation.
4. Arm, Disarm & Alarm status condition of the Intrusion Alarm System devices (i.e. motion sensors, door contacts, glass break detectors, etc..), shall be graphically displayed on the Access Controls System's built-in Graphical Designer software for display on associated PC Workstation.
5. When Intrusion Alarm System devices (i.e. motion sensors, door contacts, glass break detectors, etc.) are in alarm, provide ability to turn-on or go to full motion video, the CCTV Camera Recorder in associated area.
6. Activate alarm siren signal over Public Address speakers when Intrusion Alarm System is in alarm by providing line level output for Public Address System.
7. When Access Control System Keypads, Readers, etc. are used, provide ability to turn-on or go to full motion video, the associated CCTV Camera Recorder.
8. When door release is detected on entry or exit, provide ability to turn-on or go to full motion video, the associated CCTV Camera Recorder.
9. CCTV Camera devices and locations shall be graphically displayed on the Access Controls System's built-in Graphical Designer software for display on associated PC Workstation.
10. When exterior door intercom station is activated, provide ability to turn-on or go to full motion video, the associated CCTV Camera Recorder.
11. Access Control System Keypads, Readers, Door Lock, etc.. locations shall be graphically displayed on the Access Controls System's built-in Graphical Designer software for display on associated PC Workstation.
12. Special Entry: If a person needs a one-time entry to the facility for a particular time and day, a Access Control Keypad entry code number can be given to that person that will only work for the specific time frame; in addition, the code can automatically disarm associated intrusion alarm zone or zones in the system.
13. Emergency Codes can be used via Access Control System Keypad Entry, with capabilities to automatically notify authorities of a emergency situation, a hostage type entry, etc.
14. Photo ID Bagging Capabilities Built-in to Access Control System, allowing owners the capability to develop their own Photo ID Badges.
15. Access Control Systems can interface with LAN's & WAN's to provide seamlessly integrated solutions when additional facilities add access control solutions.
16. When Exterior Door Intercom Stations are properly interfaced to the Telephone System Display Telephones for unique call-in ID and two-way communications,

and the telephone system provides output closures (one for each controlled door) when “door release codes” are entered via the telephone’s keypad, provide ability to interface these door release code closures to Access Control System for release of each associated door.

17. The CCTV system shall provide “Recording-on-Motion” feature for every camera in the CCTV System. Only recording when the system detects motion in the view of each camera.
18. Provide interface port for interfacing to Fire Alarm System.
19. Provide interface port for interfacing to Elevator Door Access.

PART 3 - EXECUTION

3.1 GENERAL

A. Do not install equipment and materials which have not been reviewed by the Architect. Equipment and materials which are installed without the Architect's review or without complying to comments issued with the review shall be removed from the project when so instructed by the Architect. No payment will be made for unapproved or removal if it is ordered removed. The Installer shall be responsible for any ancillary costs incurred because of its removal and the installation of the correct equipment and materials.

3.2 EQUIPMENT RACKS, CABINETS AND BRACKETS

A. Securely mount equipment racks, cabinets and wall mounted relay brackets to the building structure. Proper supports such as 3/8" lag screws and expansion anchors shall be used. Proper quantity of supports shall be utilized. Dry wall screws and other types of supports not specifically approved to support equipment are specifically prohibited. Submit mounting supports for approval before installation.

3.3 TERMINATIONS

A. All copper conductors of every cable shall be completely terminated at both ends.

3.4 CABLE PATHWAYS

A. Install cables in pathways provided by the Electrical Subcontractor or required under execution part of this Section.

3.5 SEALING OF PENETRATIONS AND OPENINGS

A. Environmental Seals

1. Provide seals on raceways exposed to widely different temperatures, as in refrigerated or cold storage areas. Install seal to prevent circulation of air from warmer to colder sections through the raceway.

3.6 SEISMIC SUPPORTS, SUPPLEMENTARY STEEL AND CHANNELS

A. Provide all supports, supplementary steel and channels required for the proper Seismic installation, mounting and support of all work installed under this Section.

3.7 CABLE SUPPORTS

A. Provide strain relief hardware for backbone cables at each floor level as they pass from one floor to the next.

3.8 CABLE PROTECTION

A. Provide bushings in all metal studs and the like where cables will pass through. Bushings shall be of two (2) piece construction with one piece inserted through the opening and the second piece locking it into place. Single piece bushings with locking tabs or friction fit are specifically prohibited.

3.9 INSTALLATION

A. All cabling shall be installed in conduit where indicated on plans, or shall be installed open using other methods, approved by architect, such as J-Hooks.

1. Install wiring, per manufacturers recommendations. Use UL listed plenum cable in environmental air spaces including plenum ceilings.

3.10 TRAINING

A. As a minimum, training sessions shall consist of the following:

1. General project information and review shall be by the General Foreman or Superintendent of the Trade.

3.11 ACCEPTANCE DEMONSTRATIONS

A. Systems installed under this Section shall be demonstrated to the Owner and Architect. Demonstrations are in addition to necessary testing and training sessions. Notify all parties at least 7 days prior to the scheduled demonstration. Schedule demonstrations, in cooperation with and at times convenient to all parties, so as to not disturb ongoing activities.

3.12 PROJECT OWNER COORDINATION

A. Prior to Substantial Completion of the project and in ample time to address and resolve any coordination issues, request and arrange meetings between the Owner, Owner's Vendors and Consultants, Architect and General Contractor to discuss the Scope of Work for each system being provided and the interface required for a fully functional and operational system upon project completion. Initial meetings shall be scheduled three months prior to the scheduled Substantial Completion date or as soon as Submittals are submitted and reviewed for projects with shorter schedules.

B. Submit point designations for owner approval prior to entering in system.

C. Partition Security system into up to 8 zones as designated by owner. Each zone shall have the capability of "All" Arm/disarm code or a separate Arm/disarm code.

3.13 CLEANING UP

A. Upon completion of all work, and testing, thoroughly inspect all exposed portions of the installation and completely remove all exposed labels, markings, and foreign material.

3.14 PROJECT CLOSEOUT

A. Provide close out submittals as required herein and in DIVISION 01 including the following close out submittals.

1. Operation and Maintenance Manuals
2. Record Drawings.
3. Test Reports.

3.15 SPARE PARTS/ATTIC STOCK:

A. REQUIREMENTS:

1. Provide attic stock of the following quantities and parts for each piece of equipment as follows:

Equipment/Unit	Parts Description	Quantity
Security System	Card Printer Toner Cassettes	1
	Card Printer replacement drip unit	1
	Blank Credential Cards	500
	Motion detectors	5
	Card Readers	2
	10' Patch Cables	20
	6' Patch Cables	20
	3' Patch Cables	10
	2' Patch Cables	10
	Door Contacts	5

End of Section

Section 28 08 00

COMMISSIONING OF ELECTRONIC SAFETY AND SECURITY

PART 1 - GENERAL

1.1 RELATED DOCUMENTS

A. Drawing and general provisions of the Contract, including General and Supplementary Conditions and other Division 01 Specification Sections, apply to this section.

1.2 SUMMARY

A. This section includes commissioning process requirements for communication systems, assemblies and equipment.

B. Related Sections:

1. Division 01 Section “General Commissioning Requirements” for general commissioning process requirements.

1.3 DESCRIPTION

A. Refer to Division 01 Section “General Commissioning Requirements” for the description of commissioning.

1.4 DEFINITIONS

A. Refer to Division 01 Section “General Commissioning Requirements” for definitions.

1.5 SUBMITTALS

A. Refer to Division 01 Section “General Commissioning Requirements” for CxA’s role.

B. Refer to Division 01 Section “Submittals” for specific requirements. In addition, provide the following:

C. Certificates of readiness

D. Certificates of completion of installation, prestart, and startup activities

E. O&M manuals

F. Test Reports.

1.6 QUALITY ASSURANCE

A. Test Equipment Calibration Requirements: Contractors will comply with test manufacturer' calibration procedures and intervals. Recalibrate test instruments immediately after instruments have been repaired resulting from being dropped or damaged. Affix calibration tags to test instruments. Furnish calibration records to CxA upon request.

1.7 COORDINATION

A. Refer to Division 01 Section "General Commissioning Requirements" for requirements pertaining to coordination during the commissioning process.

PART 2 - PRODUCTS

2.1 TEST EQUIPMENT

A. All standard testing equipment required to perform startup, initial checkout and functional performance testing shall be provided by the Contractor for the equipment being tested. For example, the contractor of Division 28 shall ultimately be responsible for all standard testing equipment for the electronic systems in Division 28. A sufficient quantity of two-way radios shall be provided by each contractor.

B. Special equipment, tools and instruments (specific to a piece of equipment and only available from vendor) required for testing shall be included in the base bid price to the Owner and left on site, except for stand-alone data logging equipment that may be used by the CxA.

C. Proprietary test equipment and software required by any equipment manufacturer for programming and/or start-up, whether specified or not, shall be provided by the manufacturer of the equipment. Manufacturer shall provide the test equipment, demonstrate its use, and assist in the commissioning process as needed. Proprietary test equipment (and software) shall become the property of the Owner upon completion of the commissioning process.

D. All testing equipment shall be of sufficient quality and accuracy to test and/or measure system performance with the tolerances specified in the Specifications. If not otherwise noted, the following minimum requirements apply: Temperature sensors and digital thermometers shall have a certified calibration within the past year to an accuracy of 0.5°F and a resolution of + or - 0.1°F. Pressure sensors shall have an accuracy of + or - 2.0% of the value range being measured (not full range of meter) and have been calibrated within the last year.

PART 3 - EXECUTION

3.1 GENERAL DOCUMENTATION REQUIREMENTS

A. With assistance from the installing contractors, the CxA will prepare Pre-Functional Checklists for all commissioned components, equipment, and systems

B. **Red-lined Drawings:** The contractor will verify all equipment, systems, instrumentation, wiring and components are shown correctly on red-lined drawings. Preliminary red-lined drawings must be made available to the Commissioning Team for use prior to the start of Functional Performance Testing. Changes, as a result of Functional Testing, must be incorporated into the final as-built drawings, which will be created from the red-lined drawings. The contracted party, as defined in the Contract Documents will create the as-built drawings.

C. **Operation and Maintenance Data:** Contractor will provide a copy of O&M literature within 45 days of each submittal acceptance for use during the commissioning process for all commissioned equipment and systems. The CxA will review the O&M literature once for conformance to project requirements. The CxA will receive a copy of the final approved O&M literature once corrections have been made by the Contractor.

D. **Demonstration and Training:** Contractor will provide demonstration and training as required by the specifications. A complete training plan and schedule must be submitted by the Contractor to the CxA four weeks (4) prior to any training. A training agenda for each training session must be submitted to the CxA one (1) week prior the training session

3.2 CONTRACTOR'S RESPONSIBILITIES

A. Perform tests as required by Division 28.

B. Attend construction phase controls coordination meetings.

C. Participate in Electronic systems, assemblies, equipment, and component maintenance orientation and inspection as directed by the CA.

D. Provide information requested by the CxA for final commissioning documentation.

E. Include requirements for submittal data, operation and maintenance data, and training in each purchase order or sub-contract written.

F. Prepare preliminary schedule for Electronic system orientations and inspections, operation and maintenance manual submissions, training sessions, equipment start-up and task completion for owner. Distribute preliminary schedule to commissioning team members.

G. Update schedule as required throughout the construction period.

H. Assist the CxA in all verification and functional performance tests.

I. Provide measuring instruments and logging devices to record test data, and provide data acquisition equipment to record data for the complete range of testing for the required test period.

J. Gather operation and maintenance literature on all equipment, and assemble in binders as required by the specifications. Submit to CxA 45 days after submittal acceptance.

K. Coordinate with the CxA to provide 48-hour advance notice so that the witnessing of equipment and system start-up and testing can begin.

L. Notify the CxA a minimum of two weeks in advance of the time for start of the testing and balancing work. Attend the initial testing and balancing meeting for review of the official testing and balancing procedures.

M. Participate in, and schedule vendors and contractors to participate in the training sessions.
   1. Provide written notification to the CM/GC and CxA that the following work has been completed in accordance with the contract documents, and that the equipment, systems, and sub-system are operating as required.
   2. Security system.

N. The equipment supplier shall document the performance of his equipment.

O. Provide a complete set of red-lined drawings to the CxA prior to the start of Functional Performance Testing.

P. Equipment Suppliers
   1. Provide all requested submittal data, including detailed start-up procedures and specific responsibilities of the Owner, to keep warranties in force.
   2. Assist in equipment testing per agreements with contractors.
   3. Provide information requested by CxA regarding equipment sequence of operation and testing procedures.

Q. Refer to Division 01 Section “General Commissioning Requirements” for additional Contractor responsibilities.

3.3 CxA'S RESPONSIBILITIES

A. Refer to Division 01 Section “General Commissioning Requirements” for CxA’s Responsibilities.

3.4 TESTING PREPARATION

A. Certify in writing to the CxA that Electronic systems, subsystems, and equipment have been installed, calibrated, and started and are operating according to the Contract Documents.

B. Certify in writing to the CxA that Electronic instrumentation and controls have been completed and calibrated, that they are operating according to the Contract Documents, and that pretest set points have been recorded.

C. Certify in writing that testing procedures have been completed and that testing reports have been submitted, discrepancies corrected, and corrective work approved.

D. Place systems, subsystems, and equipment into operating mode to be tested (e.g., normal shutdown, normal auto position, normal manual position, unoccupied cycle, emergency power, and alarm conditions).

E. Inspect and verify the position of each device and interlock identified on checklists.

F. Check safety cutouts, alarms, and interlocks with building automation, smoke control and life-safety systems during each mode of operation.

G. Testing Instrumentation: Install measuring instruments and logging devices to record test data as directed by the CxA.

3.5 GENERAL TESTING REQUIREMENTS

A. Provide technicians, instrumentation, and tools to perform commissioning test at the direction of the CxA.

B. Scope of Electronic testing shall include the entire Electronic system installation, from the incoming power equipment throughout to each peripheral and end device. Testing shall include measuring, but not limited to resistance, voltage, and amperage of system(s) and devices.

C. Test all operating modes, interlocks, control responses, and responses to abnormal or emergency conditions, and verify proper response of building automation system controllers and sensors.

D. The CxA along with the Electronic system contractor and other contracted subcontractors, including the fire alarm Subcontractor shall prepare detailed testing plans, procedures, and checklists for Electronic systems, subsystems, and equipment.

E. Tests will be performed using design conditions whenever possible.

F. Simulated conditions may need to be imposed using an artificial load when it is not practical to test under design conditions. Before simulating conditions, calibrate testing instruments. Provide equipment to simulate loads. Set simulated conditions as directed by the CxA and document simulated conditions and methods of simulation. After tests, return settings to normal operating conditions.

G. The CxA may direct that set points be altered when simulating conditions is not practical.

H. The CxA may direct that sensor values be altered with a signal generator when design or simulating conditions and altering set points are not practical.

I. If tests cannot be completed because of a deficiency outside the scope of the Electronic system, document the deficiency and report it to the Owner. After deficiencies are resolved, reschedule tests.

J. If the testing plan indicates specific seasonal testing, complete appropriate initial performance tests and documentation and schedule seasonal tests.

3.6 SECURITY SYSTEMS, SUBSYSTEMS, AND EQUIPMENT TESTING PROCEDURES

A. **Equipment Testing and Acceptance Procedures:** Testing requirements are specified in individual Division 28 sections. Provide submittals, test data, inspector record, infrared camera or special equipment and certifications to the CA.

B. **Electronic Instrumentation and Control System Testing:** Field testing plans and testing requirements are specified in Division 28 Sections. Assist the CxA with preparation of testing plans.

C. **Electronic System Testing (Access Control, CCTV and/or Security):** Provide technicians, instrumentation, tools and equipment to test performance of designated systems and devices at the direction of the CxA. The CxA shall determine the sequence of testing and testing procedures for each equipment item to be tested.

D. The work included in the commissioning process involves a complete and thorough evaluation of the operation and performance of all components, systems and sub-systems. The following equipment and systems shall be evaluated:

1. Coordination and functionality with the Building Automation System/Building Management Controls System
2. Security System

3.7 DEFICIENCIES/NON-CONFORMANCE, COST OF RETESTING, FAILURE DUE TO MANUFACTURER DEFECT

A. Refer to Division 01 Section “General Commissioning Requirements” for requirements pertaining to deficiencies/non-conformance, cost of retesting, or failure due to manufacturer defect.

3.8 APPROVAL

A. Refer to Division 01 Section “General Commissioning Requirements” for approval procedures.

3.9 DEFERRED TESTING

A. Refer to Division 01 Section “General Commissioning Requirements” for requirements pertaining to deferred testing.

3.10 OPERATION AND MAINTENANCE MANUALS

A. The Operation and Maintenance Manuals shall conform to Contract Documents requirements as stated in Division 01.

B. Refer to Division 01 Section “General Commissioning Requirements” for the AE and CxA roles in the Operation and Maintenance Manual contribution, review and approval process.

3.11 TRAINING OF OWNER PERSONNEL

A. Refer to Division 01 Section “General Commissioning Requirements” for requirements pertaining to training.

End of Section

DO NOT REMOVE
THIS PAGE INTENTIONALLY LEFT BLANK

SECTION 31 00 00
EARTH MOVING

PART 1 - GENERAL

1.1 GENERAL PROVISIONS

A. Attention is directed to the CONTRACT AND GENERAL CONDITIONS and all Sections within DIVISION 01 - GENERAL REQUIREMENTS which are hereby made a part of this Section of the Specifications.

1.2 DESCRIPTION OF WORK

A. Work Included: Provide labor, materials and equipment necessary to complete the work of this Section, including but not limited to the following

1. Excavating, backfilling and compacting the Site as required to complete the Work shown on the Drawings and as specified herein, including selective excavation as required to expose and completely remove building foundations, slabs on grade, utilities, tunnels, and other site features and appurtenances.
2. Preparing subgrades for landscaping.
3. Removal of underground utilities as applicable.
4. Subbase course for concrete pavements and equipment pads.
5. Subbase and base course for asphalt paving.
6. Excavating and backfilling for utility trenches and structures.
7. Removal of items covered by Section 012200 - UNIT PRICES as applicable.
8. Coordination and maintenance of safe path of travel for the public.

B. Alternates: Not Applicable.

C. Items To Be Installed Only: Not Applicable.

D. Items To Be Furnished Only: Not Applicable.

E. Related Work: The following items are not included in this Section and will be performed under the designated Sections:
1. Section 312000 - EARTHWORK for soil materials, excavating, backfilling, and grading for the building, structures, slabs on grade, walls and foundations.
2. Section 311000 - SITE CLEARING for site stripping, grubbing, stripping and stockpiling topsoil, and removal of above- and below-grade improvements.
3. Section 312319 - DEWATERING for dewatering system for excavations.
4. Section 312500 - EROSION AND SEDIMENTATION CONTROLS for temporary erosion and sedimentation control measures.
5. Section 315000 - EXCAVATION SUPPORT AND PROTECTION for temporary excavation support and protection systems.
6. Section 316317 – GROUND IMPROVEMENTS for foundation and earthwork support systems.

7. Division 02, 22, 23, and 26 Sections for installing underground mechanical and electrical utilities and buried mechanical and electrical structures.

1.3 UNIT PRICES

A. Unit prices for certain types of earthwork are included in Section 012200 - UNIT PRICES.

B. Rock Measurement: Volume of rock actually removed, measured in original position, but not to exceed the following. Unit prices for rock excavation include replacement with approved materials.

1.4 DEFINITIONS

A. Backfill: Soil material or controlled low-strength material used to fill an excavation.

1. Initial Backfill: Backfill placed beside and over pipe in a trench, including haunches to support sides of pipe.
2. Final Backfill: Backfill placed over initial backfill to fill a trench.

B. Base Course: Course placed between the subbase course and hot-mix asphalt paving.

C. Bedding Course: Course placed over the excavated subgrade in a trench before laying pipe.

D. Borrow Soil: Satisfactory soil imported from off-site for use as fill or backfill.

E. Excavation: Removal of material encountered above subgrade elevations and to lines and dimensions indicated.

1. Authorized Additional Excavation: Excavation below subgrade elevations or beyond indicated lines and dimensions as directed by Designer. Authorized additional excavation and replacement material will be paid for according to Contract provisions for unit prices.
2. Bulk Excavation: Excavation more than 10 feet in width and more than 30 feet in length.
3. Unauthorized Excavation: Excavation below subgrade elevations or beyond indicated lines and dimensions without direction by the Architect. Unauthorized excavation, as well as remedial work directed by the Architect, shall be without additional compensation.

F. Fill: Soil materials used to raise existing grades.

G. Rock: Rock material in beds, ledges, unstratified masses, conglomerate deposits, and boulders of rock material that exceed 1 cu. yd. for bulk excavation or 3/4 cu. yd. for footing, trench, and pit excavation that cannot be removed by rock excavating

equipment equivalent to the following in size and performance ratings, without systematic drilling, ram hammering, ripping, or blasting, when permitted:

H. Structures: Buildings, footings, foundations, retaining walls, slabs, tanks, curbs, mechanical and electrical appurtenances, or other man-made stationary features constructed above or below the ground surface.

I. Subbase Course: Course placed between the subgrade and base course for hot-mix asphalt pavement, or course placed between the subgrade and a cement concrete pavement or a cement concrete or hot-mix asphalt walk.

J. Subgrade: Surface or elevation remaining after completing excavation, or top surface of a fill or backfill immediately below subbase, drainage fill, or topsoil materials.

K. Utilities: On-site underground pipes, conduits, ducts, and cables.

1.5 SUBMITTALS

A. Product Data: For the following:

1. Each type of plastic warning tape.
2. Geotextile.
3. Controlled low-strength material, including design mixture.
4. A detailed construction sequence plan for project excavation indicating temporary stockpile areas, side slopes of excavations, limits of any required temporary excavation support and sequence and procedures for slope protection, subgrade protection, excavation, concrete placement, moisture conditioning of on-site excavated soils used as fill, filling, backfill and compaction.

B. Material Test Reports: From a qualified testing agency indicating and interpreting test results for compliance of the following with requirements indicated:

1. Classification according to ASTM D 2487 of each on-site and borrow soil material proposed for fill and backfill.
2. Laboratory compaction curve according to ASTM D 1557 for each onsite and borrow soil material proposed for fill and backfill.
3. Test reports for compliance with ASTM D2940 requirements for subbase material.
4. Particle size Analysis in accordance with ASTM D422.

C. Pre-excavation Photographs and Videotape: Show existing conditions of adjoining construction and site improvements, including finish surfaces, that might be misconstrued as damage caused by earthwork operations. Submit before earthwork begins. Maintain catalog of up-to-date photographs at the site.

D. Plan to Maintain Safe Path of Travel: Submit plans for maintaining safe paths of travel for the general public during the entire project, including requirement for police details of necessary.

1.6 PROJECT CONDITIONS

A. Existing Utilities: Do not interrupt utilities serving facilities occupied by the City of Framingham or others unless permitted in writing by Architect and then only after arranging to provide temporary utility services according to requirements indicated.

1. Notify the City of Framingham not less than two days in advance of proposed utility interruptions.
2. Do not proceed with utility interruptions without the City of Framingham's written permission.
3. Contact utility-locator service for area where Project is located before excavating.

B. Demolish and completely remove from site existing underground utilities indicated to be removed. Coordinate with utility companies to shut off services if lines are active.

1.7 EXAMINATION OF SITE CONDITIONS AND DOCUMENTS

A. It is hereby understood that the Contractor has carefully examined the site and all conditions affecting work under this Section. No claim for additional costs will be allowed because of lack of full knowledge of existing conditions as indicated in the Contract Documents, or obvious from observation at the Site

B. Plans, surveys, measurements, and dimensions under which the work is to be performed are believed to be correct, but the Contractor shall have examined them for himself during the bidding period, as no allowance will be made for any errors or inaccuracies that may be found except as otherwise provided herein.

1.8 COORDINATION

A. Prior to start of earthwork, the Contractor shall arrange an onsite meeting with the Architect, Engineer, the Geotechnical Engineer, and the testing agency for the purpose of establishing the Contractor's schedule of operations, and scheduling observation and testing procedures and requirements.

B. As construction proceeds, the Contractor shall be responsible for notifying the Geotechnical Engineer and the testing agency prior to the start of earthwork operations requiring observation and/or testing.

C. The work of this Section shall be coordinated with that of other trades affecting, or affected by, this work, as necessary to ensure the steady progress of all work of the Contract.

1.9 SUBSURFACE CONDITIONS

A. Subsurface explorations have been performed at the site by the Geotechnical Engineer. The results of the explorations are included in the geotechnical report prepared by.

B. The subsurface explorations and geotechnical report were performed primarily for use in preparing the foundation design. Use and interpretation of these data for purposes of the work shall be the responsibility of the Contractor. Subsurface conditions and groundwater levels are not considered as accurate for any times or locations other than the specific time and location of each of the explorations.

C. Contractor may, at his own expense, conduct additional subsurface testing as required for his own information after approval by the Owner.

D. The Contractor shall be responsible for determining the quantities of earth materials necessary to complete the work under this Section. All earth materials shall be included in the Contractor's base bid.

E. Information on subsurface conditions is made available for the convenience of the Bidders. The Owner does not present the information to the Contractor as either an accurate or a comprehensive indication of subsurface conditions. Bidders are invited to review the information to apprise themselves of the information available, and also to make additional investigations at their own expense.

F. No claim for extra cost or extension of time resulting from reliance by the Contractor on information presented herein shall be allowed, except as provided in the Contract Documents.

1.10 PERMITS, CODES AND SAFETY REQUIREMENTS

A. Work shall conform to the Contract Drawings and Specifications and shall comply with applicable codes and regulations. Present in writing to the Architect, all conflicts between the Contract Drawings, Specifications, and applicable codes and regulations, for resolution before commencing the Work.

B. Comply with all rules, regulations, laws and ordinances of the City of Framingham and the Commonwealth of Massachusetts, and of all other authorities having jurisdiction. All labor, materials, equipment and services necessary to make the work comply with such requirements, shall be provided without additional cost to the Owner.

C. The Contractor shall not close any street, sidewalk or passageway except as indicated on the Contract Drawings. The Contractor shall so conduct his operations as to interfere as little as possible with the use ordinarily made of roads, driveways, sidewalks or other facilities near enough to the work to be affected thereby.

D. The Contractor shall procure and pay for all permits and licenses required for the complete work specified herein and shown on the Contract Drawings at no additional cost to the Owner. Arrange and pay for legal off-site disposal of all excess excavated materials, obtain proper disposal receipts from the applicable disposal facility for verification.

E. Notify "Dig Safe" and the Owner before starting work; comply fully with utility company requirements.

1.11 LAYOUT AND GRADES

A. The Contractor shall maintain and/or re-establish benchmarks and survey monuments shown on the Contract Drawings or found to exist on the site to provide a base reference for the construction. Replace any that may become destroyed or disturbed. The Contractor shall employ and pay all costs for a registered Civil Engineer or Surveyor who is licensed within the jurisdiction of the project site to lay out all lines and grades in accordance with the Contract Drawings and Specifications, and as necessary or required for the construction.

1.12 DISPOSITION OF EXISTING UTILITIES

A. Active utilities existing on the site shall be carefully protected from damage and relocated or removed by others as specified in the Contract Documents. When an active utility line is exposed during construction, its location and elevation shall be plotted on the record Contract Drawings and both the Architect and Utility Owner notified in writing.

B. Inactive or abandoned utilities encountered within the new building area during construction operations shall be removed. The location of such utilities shall be noted on the record Contract Drawings and reported in writing to the Architect.

C. In removing existing abandoned utilities within the new building area, the Contractor shall also excavate all associated backfill material and replace with compacted Structural Fill.

1.13 DISPOSAL

A. The Contractor shall re-use on-site excavated soils on-site as Ordinary Fill as indicated below and in section 2.1. Solid waste consisting of brick, concrete, asphalt, cobbles and boulders that measure less than two cubic yards in volume shall become the property of the Contractor and be legally disposed of off-site at no additional cost to the Owner. Excavated on-site soils which are suitable for re-use at the time of excavation but become frozen or too wet for re-use due to poor material handling practices shall be disposed of off-site and replaced as necessary at no additional cost to the Owner.

B. Solid waste resulting from screening or culling operations shall become the property of the Contractor and be legally disposed of off-site at no additional cost to the Owner.

1.14 MEASUREMENT AND PAYMENT

A. The base bid lump sum price shall include all costs of whatever nature associated with the content of this specification section and earthwork shown on the Contract Drawings including, but not limited to: demolition and removal of existing abandoned utilities and associated structures and appurtenances as indicated on the Contract Drawings, excavation for site improvements, removal of existing subsurface obstructions, segregating and all screening operations, stockpiling, handling and re-use of excavated materials, earthwork for paved areas, utilities, and site improvements,

construction dewatering, off-site disposal of all solid waste, placement and compaction of the specified fill materials in accordance with procedures documented herein, loading of all materials to be disposed of off-site and trucking and disposal of all Unregulated soil and solid waste.

B. The Contractor shall include in his lump sum price all costs associated with excavating all existing fill, topsoil, subsoil and natural soil materials down to the surface of the design bearing strata consisting of the natural soil, followed by replacement with compacted fill as specified herein

C. The Contractor shall include in his lump sum price all costs associated with segregating, culling and screening operations required for rendering the on-site fill material suitable for reuse on this project as Ordinary Fill material as defined herein.

D. If any part of the excavation is carried through error beyond the depth directed by the Architect and the dimensions indicated on the Contract Drawings, or called for in the Specifications, the Contractor, at his own expense, shall furnish and install compacted Gravel Borrow, Crushed Stone or lean concrete as directed by the Architect up to the required level and/or dimensions.

E. Compensation for all work required under this Section and not specifically covered elsewhere, shall be included in the Contract Lump Sum Price for Earthwork. For purposes of adjusting the scope of construction see the Unit Price Schedule.

1.15 FIELD QUALITY CONTROL

A. The Owner may retain and pay for the services of an independent testing agency to monitor backfill operations and to perform field density tests, and a Geotechnical Engineer to periodically observe the earthwork operations and observe the preparation of the subgrade for paved areas, equipment pads, and utility trenches and structures. The geotechnical engineer may from time to time request that the contractor excavate tests pits ahead of excavation to confirm subsurface conditions.

B. The Contractor shall make provisions for allowing observations and testing of Contractor's Work by the Geotechnical Engineer and by the independent testing and inspection firm.

C. Costs related to retesting due to unacceptable quality of work and failures discovered by testing shall be paid for by the Contractor at no additional expense to Owner, and the costs thereof will be deducted by the Owner from the Contract Sum.

D. The Owner's Geotechnical Consultant's and/or Testing Agency's presence does not include supervision or direction of work by the Contactor, his/her employees or agents. Neither the presence of the Owner's Geotechnical Consultant and/or Testing Agency nor any observations performed by him/her, or any notice or failure to give notice, shall excuse the Contractor from deficiencies in the work.

PART 2 - PRODUCTS

2.1 SOIL MATERIALS

A. General: Provide soil materials when sufficient satisfactory soil materials are not available from on-site excavations.

B. Satisfactory Soils: ASTM D 2487 Soil Classification Groups GW, GP, GM, SW, SP, and SM or a combination of these groups; free of rock or gravel larger than 3 inches in any dimension, debris, waste, frozen materials, vegetation, and other deleterious matter.

C. Unsatisfactory Soils: Soil Classification Groups GC, SC, CL, ML, OL, CH, MH, OH, and PT according to ASTM D 2487, or a combination of these groups.

1. Unsatisfactory soils also include satisfactory soils not maintained within 2 percent of optimum moisture content at time of compaction.
2. Onsite material for use in compacted fill shall be natural inorganic granular soil taken from areas of cut after removal of pavement, topsoil, or other unsuitable materials. Onsite materials should be tested for compliance with the specifications before placement. Onsite materials with less than 40 percent fines and with maximum particle size of 6 inches or less can be reused. Onsite materials that do not meet the gradation requirements of the specification should be used in landscaped areas, relocated onsite if directed by the Owner, or disposed of offsite.

D. Ordinary Fill shall consist of inert, hard, durable sand and gravel, free from ice and snow, organic matter, clay, surface coatings, and deleterious materials, and shall have a plasticity index of less than 6. Ordinary fill shall be placed in 12-inch loose lifts and shall conform to the following gradation requirements:

Sieve Size	Percent Passing By Weight
6-inches	100
1-inch	50-100
No. 4	20-100
No. 20	10-70
No. 60	5-45
No. 200	0-20

E. Crushed Stone shall consist of durable crushed rock or durable crushed gravel stone, free from ice and snow, sand, clay, loam, or other deleterious material, conforming to SSHB, Section M2.01.0 through M2.01.6 size as indicated on Drawings. Crushed stone shall be uniformly blended and conform to the following gradation requirements.

	Percent Passing By Weight		
Sieve Size	1/2-Inch Stone	3/4-Inch Stone	1.5-Inch Stone
2 inches	100	100	100
1-1/2 inch	100	100	95-100
1 inch	100	100	35-70
3/4 inch	100	90-100	0-25

5/8 inch	100	---	---
1/2 inch	85-100	10-50	---
3/8 inch	15-45	0-20	---
No. 4	0-15	0-5	---
No. 8	0-5	---	---

F. Subbase Material: Processed Gravel for subbase shall be naturally or artificially graded mixture of natural or crushed gravel, crushed stone, and natural or crushed sand, meeting the requirements of SSHB Processed Gravel for Subbase, Section M1.03.1, Type B

Sieve Size	Percent Passing By Weight
3 inches	100
1-1/2 inches	70-100
3/4 inch	50-85
No. 4	30-60
No. 200	0-10

G. Base Course: Dense Graded Crushed Stone for base course shall be naturally or artificially graded mixture of natural or crushed gravel, crushed stone, and natural or crushed sand, consisting of angular material, that is hard, durable and free from clay, loam or other plastic material. Gradation shall conform to MHD Specification Designation, M2.01.7, and the following:

Sieve Size	Percent Passing By Weight
2 inches	100
1-1/2 inches	70-100
3/4 inch	50-85
No. 4	30-55
No. 50	8-24
No. 200	3-10

H. Sand shall consist of clean inert, hard, durable grains of quartz or other hard durable rock, free from clay, organics, surface coatings or other deleterious material, confirming to SSHB Section M1.04.1. Sand shall conform to the following gradation:

Sieve Size	Percent Passing by Weight
1/2-inch	100
3/8-inch	85-100
No. 4	60-100
No. 16	35-80
No. 50	10-55
No. 100	2-10

I. Rip Rap shall be sound, durable rock which is angular in shape, confirming to SSHB, Section M2.02.3. Rounded stones, boulders, sandstone or similar stone or relatively thin slabs will not be acceptable. Each stone shall weigh not less than 50 pounds but not more than 125 pounds and at least 75 percent of the volume shall consist of stones weighing not less than 75 pounds each. The remainder of the stones shall be graded that when placed with the larger stones the entire mass will be compact.

2.2 GEOTEXTILES

A. Separation Geotextile: Woven geotextile fabric, manufactured for separation applications, made from polyolefins or polyesters; with elongation less than 50 percent; complying with AASHTO M 288 and the following, measured per test methods referenced:

1. Survivability: Class 2; AASHTO M 288.
2. Grab Tensile Strength: 247 lbf; ASTM D 4632.
3. Sewn Seam Strength: 222 lbf; ASTM D 4632.
4. Tear Strength: 90 lbf; ASTM D 4533.
5. Puncture Strength: 90 lbf; ASTM D 4833.
6. Apparent Opening Size: No. 60 sieve, maximum; ASTM D 4751.
7. Permittivity: 0.02 per second, minimum; ASTM D 4491.
8. UV Stability: 50 percent after 500 hours' exposure; ASTM D 4355.

2.3 ACCESSORIES

A. Detectable Warning Tape: Acid- and alkali-resistant polyethylene film warning tape manufactured for marking and identifying underground utilities, a minimum of 6 inches wide and 4 mils thick, continuously inscribed with a description of the utility, with metallic core encased in a protective jacket for corrosion protection, detectable by metal detector when tape is buried up to 30 inches deep; colored as follows:

1. Red: Electric.
2. Yellow: Gas, oil, steam, and dangerous materials.
3. Orange: Telephone and other communications.
4. Blue: Water systems.
5. Green: Sewer systems.

2.4 USE OF MATERIALS

A. Use of materials shall be as described below and as shown in the Drawings.

B. Ordinary Fill: Use Ordinary Fill as general site fill outside of the new building footprint area for embankments, landscaping, and beneath Processed Gravel for Subbase in paved areas where specified material such as Crushed Stone, Structural Fill, Crushed Stone and Sand are not indicated.

C. Crushed Stone - Use crushed stone as indicated on the Drawings.

D. Processed Gravel - Use for Subbase under paved areas.

E. Dense Graded Crushed Stone - Use for base under paved areas.

F. Sand – Use sand for bedding for utility bedding, setting bed for concrete block pavers, and as indicated elsewhere on the drawings

G. Rip Rap – To be used at outlet pipes at flared end sections, emergency overflow at surface basin, and as indicated elsewhere on the drawings.

H. Filter Fabric/Geotextiles- To be used as filter barriers at transition between soil and crushed stone, or other materials to assist in stabilizing soil subgrades, and as indicated elsewhere on the drawings. The edges of the fabric should be overlapped a minimum of one foot.

PART 3 - EXECUTION

3.1 PREPARATION

A. Protect structures, utilities, sidewalks, pavements, and other facilities from damage caused by settlement, lateral movement, undermining, washout, and other hazards created by earthwork operations.

B. Preparation of subgrade for earthwork operations including removal of vegetation, topsoil, debris, obstructions, and deleterious materials from ground surface is specified in Section 311000 - SITE CLEARING.

C. Protect and maintain erosion and sedimentation controls, which are specified in Section 311000 - SITE CLEARING, during earthwork operations.

D. Provide protective insulating materials to protect subgrades and foundation soils against freezing temperatures or frost.

3.2 DEWATERING

A. Prevent surface water and ground water from entering excavations, from ponding on prepared subgrades, and from flooding Project site and surrounding area. Dispose of contaminated water in accordance with regulations of authorities having jurisdiction.

B. Protect subgrades from softening, undermining, washout, and damage by rain or water accumulation.

1. Reroute surface water runoff away from excavated areas. Do not allow water to accumulate in excavations. Do not use excavated trenches as temporary drainage ditches.
2. Install a dewatering system to keep subgrades dry and convey ground water away from excavations. Maintain until dewatering is no longer required.

3.3 EXPLOSIVES

A. Explosives: Do not use explosives.

3.4 EXCAVATION, GENERAL

A. Unclassified Excavation: Excavate to subgrade elevations regardless of the character of surface and subsurface conditions encountered. Unclassified excavated materials may include rock, soil materials, and obstructions. No changes in the Contract Sum or the Contract Time will be authorized for rock excavation or removal of obstructions.

1. If excavated materials intended for fill and backfill include unsatisfactory soil materials and rock, replace with satisfactory soil materials.
2. Remove rock to lines and grades indicated to permit installation of permanent construction without exceeding the following dimensions:

    a. 24 inches outside of concrete forms other than at footings.
    b. 12 inches outside of concrete forms at footings.
    c. 6 inches outside of minimum required dimensions of concrete cast against grade.
    d. Outside dimensions of concrete walls indicated to be cast against rock without forms or exterior waterproofing treatments.
    e. 6 inches beneath bottom of concrete slabs on grade.
    f. 6 inches beneath pipe in trenches, and the greater of 24 inches wider than pipe or 42 inches wide.

3.5 EXCAVATION FOR STRUCTURES

A. Excavate to indicated elevations and dimensions within a tolerance of plus or minus 1 inch If applicable, extend excavations a sufficient distance from structures for placing and removing concrete formwork, for installing services and other construction, and for inspections.

1. Excavations for Footings and Foundations: Do not disturb bottom of excavation. Excavate by hand to final grade just before placing concrete reinforcement. Trim bottoms to required lines and grades to leave solid base to receive other work.
2. Pile Foundations: Stop excavations 6 to 12 inches above bottom of pile cap before piles are placed. After piles have been driven, remove loose and displaced material. Excavate to final grade, leaving solid base to receive concrete pile caps.
3. Excavation for Underground Tanks, Basins, and Mechanical or Electrical Utility Structures: Excavate to elevations and dimensions indicated within a tolerance of plus or minus 1 inch. Do not disturb bottom of excavations intended as bearing surfaces.

3.6 EXCAVATION FOR WALKS AND PAVEMENTS

A. Excavate surfaces under walks and pavements to indicated lines, cross sections, elevations, and subgrades.

3.7 EXCAVATION FOR UTILITY TRENCHES

A. Excavate trenches to indicated gradients, lines, depths, and elevations.

1. Beyond building perimeter, excavate trenches to allow installation of top of pipe below frost line.

B. Excavate trenches to uniform widths to provide the following clearance on each side of pipe or conduit. Excavate trench walls vertically from trench bottom to 12 inches higher than top of pipe or conduit, unless otherwise indicated.

1. Clearance: 12 inches each side of pipe or conduit.

C. Trench Bottoms: Excavate and shape trench bottoms to provide uniform bearing and support of pipes and conduit. Shape subgrade to provide continuous support for bells, joints, and barrels of pipes and for joints, fittings, and bodies of conduits. Remove projecting stones and sharp objects along trench subgrade.

1. For pipes and conduit less than 6 inches in nominal diameter and flat-bottomed, multiple-duct conduit units, hand-excavate trench bottoms and support pipe and conduit on an undisturbed subgrade.
2. For pipes and conduit 6 inches or larger in nominal diameter, shape bottom of trench to support bottom 90 degrees of pipe circumference. Fill depressions with tamped sand backfill.
3. Excavate trenches 6 inches deeper than elevation required in rock or other unyielding bearing material to allow for bedding course.

3.8 SUBGRADE INSPECTION

A. Notify Designer when excavations have reached required subgrade.

B. If Designer determines that unsatisfactory soil is present, continue excavation and replace with compacted backfill or fill material as directed.

C. Proof-roll subgrade below the building slabs and pavements with heavy pneumatic-tired equipment to identify soft pockets and areas of excess yielding. Do not proof-roll wet or saturated subgrades.

1. Completely proof-roll subgrade in one direction, repeating proof-rolling in direction perpendicular to first direction. Limit vehicle speed to 3 mph.
2. Proof-roll with a loaded 10-wheel, tandem-axle dump truck weighing not less than 15 tons.
3. Excavate soft spots, unsatisfactory soils, and areas of excessive pumping or rutting, as determined by Designer, and replace with compacted backfill or fill as directed.

D. Reconstruct subgrades damaged by freezing temperatures, frost, rain, accumulated water, or construction activities, as directed by Designer, without additional compensation.

3.9 UNAUTHORIZED EXCAVATION

A. Fill unauthorized excavation under foundations or wall footings by extending bottom elevation of concrete foundation or footing to excavation bottom, without altering top elevation. Lean concrete fill, with 28-day compressive strength of 2500 psi may be used when approved by Designer.

1. Fill unauthorized excavations under other construction or utility pipe as directed by Designer.

3.10 STORAGE OF SOIL MATERIALS

A. Stockpile borrow soil materials and excavated satisfactory soil materials without intermixing. Place, grade, and shape stockpiles to drain surface water. Cover to prevent windblown dust.

1. Stockpile soil materials away from edge of excavations. Do not store within drip line of remaining trees.
2. Stockpile soil materials in a location, acceptable to the City of Framingham Project Manager, that will preclude having to relocate stockpiled soil materials that would otherwise delay or impact the Work.

3.11 BACKFILL

A. Place and compact backfill in excavations promptly, but not before completing the following:

1. Construction below finish grade including, where applicable, subdrainage, dampproofing, waterproofing, and perimeter insulation.
2. Surveying locations of underground utilities for Record Documents.
3. Testing and inspecting underground utilities.
4. Removing concrete formwork.
5. Removing trash and debris.
6. Removing temporary shoring and bracing, and sheeting.
7. Installing permanent or temporary horizontal bracing on horizontally supported walls.

B. Place backfill on subgrades free of mud, frost, snow, or ice.

3.12 UTILITY TRENCH BACKFILL

A. Place backfill on subgrades free of mud, frost, snow, or ice.

B. Place and compact bedding course on trench bottoms and where indicated. Shape bedding course to provide continuous support for bells, joints, and barrels of pipes and for joints, fittings, and bodies of conduits.

C. Backfill trenches excavated under footings and within 18 inches of bottom of footings with satisfactory soil; fill with concrete to elevation of bottom of footings. Concrete is specified in Section 033000 - CAST-IN-PLACE CONCRETE.

D. Provide 4-inch- thick, concrete-base slab support for piping or conduit less than 30 inches below surface of roadways. After installing and testing, completely encase piping or conduit in a minimum of 4 inches of concrete before backfilling or placing roadway subbase.

E. Place and compact initial backfill of subbase material free of particles larger than 1 inch in any dimension, to a height of 12 inches over the utility pipe or conduit.

1. Carefully compact initial backfill under pipe haunches and compact evenly up on both sides and along the full length of utility piping or conduit to avoid damage or displacement of piping or conduit. Coordinate backfilling with utilities testing.

F. Backfill voids with satisfactory soil while installing and removing shoring and bracing.

G. Place and compact final backfill of satisfactory soil to final subgrade elevation.

H. Install warning tape directly above utilities, 12 inches below finished grade, except 6 inches below subgrade under pavements and slabs.

3.13 SOIL FILL

A. Plow, scarify, bench, or break up sloped surfaces steeper than 1 vertical to 4 horizontal so fill material will bond with existing material.

B. Place and compact fill material in layers to required elevations as follows:

1. Under grass and planted areas, use satisfactory soil material.
2. Under walks and pavements, use satisfactory soil material.
3. Under steps and ramps, use engineered fill.
4. Under building slabs, use engineered fill.
5. Under footings and foundations, use engineered fill.

C. Place soil fill on subgrades free of mud, frost, snow, or ice.

3.14 SOIL MOISTURE CONTROL

A. Uniformly moisten or aerate subgrade and each subsequent fill or backfill soil layer before compaction to within 2 percent of optimum moisture content.

1. Do not place backfill or fill soil material on surfaces that are muddy, frozen, or contain frost or ice.
2. Remove and replace, or scarify and air dry otherwise satisfactory soil material that exceeds optimum moisture content by 2 percent and is too wet to compact to specified dry unit weight.

3.15 COMPACTION OF SOIL BACKFILLS AND FILLS

A. Place backfill and fill soil materials in layers not more than 8 inches in loose depth for material compacted by heavy compaction equipment, and not more than 4 inches in loose depth for material compacted by hand-operated tampers.

B. Place backfill and fill soil materials evenly on all sides of structures to required elevations, and uniformly along the full length of each structure.

C. Compact soil materials to not less than the following percentages of maximum dry unit weight according to ASTM D 1557:

1. Under structures, building slabs, steps, and pavements, scarify and recompact top 12 inches of existing subgrade and each layer of backfill or fill soil material at 95 percent; and areas within 10 feet of structures, building slabs, steps, and pavements at 92 percent.
2. Under walkways, scarify and recompact top 6 inches below subgrade and compact each layer of backfill or fill soil material at 92 percent.
3. Under lawn or unpaved areas, scarify and recompact top 6 inches below subgrade and compact each layer of backfill or fill soil material at 85 percent.
4. For utility trenches, compact each layer of initial and final backfill soil material at 85 percent.

3.16 GRADING

A. General: Uniformly grade areas to a smooth surface, free of irregular surface changes. Comply with compaction requirements and grade to cross sections, lines, and elevations indicated.

1. Provide a smooth transition between adjacent existing grades and new grades.
2. Cut out soft spots, fill low spots, and trim high spots to comply with required surface tolerances.

B. Site Grading: Slope grades to direct water away from buildings and to prevent ponding. Finish subgrades to required elevations within the following tolerances:

1. Lawn or Unpaved Areas: Plus or minus 1 inch.
2. Walks: Plus or minus 1 inch.
3. Pavements: Plus or minus 1/2 inch.

C. Grading inside Building Lines: Finish subgrade to a tolerance of 1/2 inch when tested with a 10-foot straightedge.

3.17 SUB DRAINAGE

A. Subdrain: Place subsurface drainage geotextile around perimeter of subdrainage trench. Place a 6-inch course of filter material on subsurface drainage geotextile to support subdrainage pipe. Encase subdrainage pipe in a minimum of 12 inches of

filter material, placed in compacted layers 6 inches thick, and wrap in subsurface drainage geotextile, overlapping sides and ends at least 6 inches.

1. Compact each filter material layer to 85 percent of maximum dry unit weight according to ASTM D 1557.

B. Drainage Backfill: Place and compact filter material over subsurface drain, in width indicated, to within 12 inches of final subgrade, in compacted layers 6 inches thick. Overlay drainage backfill with 1 layer of subsurface drainage geotextile, overlapping sides and ends at least 6 inches.

1. Compact each filter material layer to 85 percent of maximum dry unit weight according to ASTM D 1557.
2. Place and compact impervious fill over drainage backfill in 6-inch-thick compacted layers to final subgrade.

3.18 SUBBASE AND BASE COURSES

A. Place subbase and base course on subgrades free of mud, frost, snow, or ice.

B. On prepared subgrade, place subbase and base course under pavements and walks as follows:

1. Install separation geotextile on prepared subgrade according to manufacturer's written instructions, overlapping sides and ends.
2. Place base course material over subbase course under hot-mix asphalt pavement.
3. Shape subbase and base course to required crown elevations and cross-slope grades.
4. Place subbase and base course 6 inches or less in compacted thickness in a single layer.
5. Place subbase and base course that exceeds 6 inches in compacted thickness in layers of equal thickness, with no compacted layer more than 6 inches thick or less than 3 inches thick.
6. Compact subbase and base course at optimum moisture content to required grades, lines, cross sections, and thickness to not less than 95 percent of maximum dry unit weight according to ASTM D 1557.

C. Pavement Shoulders: Place shoulders along edges of subbase and base course to prevent lateral movement. Construct shoulders, at least 12 inches wide, of satisfactory soil materials and compact simultaneously with each subbase and base layer to not less than 95 percent of maximum dry unit weight according to ASTM D 1557.

3.19 DRAINAGE COURSE

A. Place drainage course on subgrades free of mud, frost, snow, or ice.

B. On prepared subgrade, place and compact drainage course under cast-in-place concrete slabs-on-grade as follows:

1. Install subdrainage geotextile on prepared subgrade according to manufacturer's written instructions, overlapping sides and ends.
2. Compact each layer of drainage course to required cross sections and thicknesses to not less than 95 percent of maximum dry unit weight according to ASTM D 1557.

3.20 FIELD QUALITY CONTROL

A. Independent Testing Agency: Cooperate with the Independent Testing Agency engaged by the City of Framingham for field quality control activities for the Work of this Section. Refer also to Section 014325 - TESTING AGENCY SERVICES.

B. Cooperate with field quality control personnel.

C. Additional inspections and retesting of materials which fail to comply with specified material and installation requirements shall be performed at Contractor's expense.

D. Allow testing agency to inspect and test subgrades and each fill or backfill layer. Proceed with subsequent earthwork only after test results for previously completed work comply with requirements.

E. Footing Subgrade: At footing subgrades, at least one test of each soil stratum will be performed to verify design bearing capacities. Subsequent verification and approval of other footing subgrades may be based on a visual comparison of subgrade with tested subgrade when approved by Designer.

F. Testing agency will test compaction of soils in place according to ASTM D 1556, ASTM D 2167, ASTM D 2922, and ASTM D 2937, as applicable. Tests will be performed at the following locations and frequencies:

1. Paved and Building Slab Areas: At subgrade and at each compacted fill and backfill layer, at least 1 test for every 2000 sq. ft. or less of paved area or building slab, but in no case fewer than 3 tests.
2. Foundation Wall Backfill: At each compacted backfill layer, at least 1 test for each 100 feet or less of wall length, but no fewer than 2 tests.
3. Trench Backfill: At each compacted initial and final backfill layer, at least 1 test for each 150 feet or less of trench length, but no fewer than 2 tests.

G. When testing agency reports that subgrades, fills, or backfills have not achieved degree of compaction specified, scarify and moisten or aerate, or remove and replace soil to depth required; recompact and retest until specified compaction is obtained.

H. Notify the Independent Testing Agency a minimum of 72 hours prior to start of earthwork operations, to comply with Code requirement that a registered design professional be present at all times during backfill to assure adequate compaction with no bridging effects.

3.21 PROTECTION

A. Protecting Graded Areas: Protect newly graded areas from traffic, freezing, and erosion. Keep free of trash and debris.

B. Repair and reestablish grades to specified tolerances where completed or partially completed surfaces become eroded, rutted, settled, or where they lose compaction due to subsequent construction operations or weather conditions.

1. Scarify or remove and replace soil material to depth as directed by Designer; reshape and recompact.

C. Where settling occurs before Project correction period elapses, remove finished surfacing, backfill with additional soil material, compact, and reconstruct surfacing.

1. Restore appearance, quality, and condition of finished surfacing to match adjacent work, and eliminate evidence of restoration to greatest extent possible.

3.22 DISPOSAL OF SURPLUS AND WASTE MATERIALS

A. Disposal: Remove surplus satisfactory soil and waste material, including unsatisfactory soil, trash, and debris, and legally dispose of it off the User Agency's property.

END OF SECTION

DO NOT REMOVE
THIS PAGE INTENTIONALLY LEFT BLANK

SECTION 31 10 00

SITE CLEARING

PART 1 - GENERAL

1.1 GENERAL PROVISIONS

A. Attention is directed to the CONTRACT AND GENERAL CONDITIONS and all Sections within DIVISION 01 - GENERAL REQUIREMENTS which are hereby made a part of this Section of the Specifications.

1.2 DESCRIPTION OF WORK

A. Work Included: Provide labor, materials and equipment necessary to complete the work of this Section, including but not limited to the following:

1. Protecting existing trees and vegetation to remain, including temporary fencing for trees in close proximity to construction operations.
2. Removing existing trees and vegetation indicated to be removed.
3. Clearing and grubbing.
4. Stripping and stockpiling topsoil.
5. Removing above and below grade site improvements.
6. Disconnecting, capping or sealing of utilities as required.

B. Alternates: Not Applicable.

C. Items To Be Installed Only: Not Applicable.

D. Items To Be Furnished Only: Not Applicable.

E. Related Work: The following items are not included in this Section and will be performed under the designated Sections:

1. Section 312000 – EARTH WORK for soil materials, excavating, backfilling, and grading for the building, structures, slabs on grade, walls and foundations.
2. Section 310000 - EARTH MOVING for soil materials, excavating, backfilling, and site grading and removal of site utilities.
3. Section 312500 - EROSION AND SEDIMENATION CONTROLS for required erosion and sedimentation control measures.

1.3 DEFINITIONS

A. Topsoil: Natural or cultivated surface-soil layer containing organic matter and sand, silt, and clay particles; friable, pervious, and black or a darker shade of brown, gray, or red than underlying subsoil; reasonably free of subsoil, clay lumps, gravel, and other objects more than 2 inches in diameter; and free of subsoil and weeds, roots, toxic materials, or other nonsoil materials.

B. Tree Protection Zone: Area surrounding individual trees or groups of trees to be protected during construction and defined by the drip line of individual trees or the perimeter drip line of groups of trees, unless otherwise indicated.

1.4 MATERIAL OWNERSHIP

A. Except for stripped topsoil or other materials indicated to remain the City of Framingham's property, cleared materials shall become Contractor's property and shall be removed from Project site.

1.5 SUBMITTALS

A. Photographs sufficiently detailed, of existing conditions of trees and plantings, adjoining construction, and site improvements that might be misconstrued as damage caused by site clearing.

B. Record drawings, according to Section 017700 - CONTRACT CLOSEOUT identifying and accurately locating capped utilities and other subsurface structural, electrical, and mechanical conditions.

1.6 PROJECT CONDITIONS

A. Traffic: Minimize interference with adjoining roads, streets, walks, and other adjacent occupied or used facilities during site-clearing operations.

1. Do not close or obstruct streets, walks, or other adjacent occupied or used facilities without permission from the Project Manager and authorities having jurisdiction.
2. Provide alternate routes around closed or obstructed traffic ways if required by authorities having jurisdiction.

B. Salvagable Improvements: Carefully remove items indicated to be salvaged and store on User Agency's premises where indicated.

C. Utility Locator Service: Notify utility locator service for area where Project is located before site clearing.

D. Do not commence site clearing operations until erosion and sedimentation control measures are in place.

E. Protection of Existing Improvements: Provide protection necessary to prevent damage to existing improvements indicated to remain in place or outside of the limit of work. Protect improvements on adjoining properties and on User Agency's property.

1. Restore improvements damaged by Contractor's clearing activities to their original condition, at no additional expense to the City of Framingham.

PART 2 - PRODUCTS (Not Used)

PART 3 - EXECUTION

3.1 PREPARATION

A. Protect and maintain benchmarks and survey control points from disturbance during construction.

B. Locate and clearly flag trees and vegetation to remain or to be relocated.

C. Protect existing site improvements to remain from damage during construction.

1. Restore damaged improvements to their original condition, as acceptable to the Architect.

3.2 TREE PROTECTION

A. Erect and maintain temporary fencing around tree protection zones before starting site clearing. Remove fence when construction is complete.

1. Do not store construction materials, debris, or excavated material within fenced area.
2. Do not permit vehicles, equipment, or foot traffic within fenced area.
3. Maintain fenced area free of weeds and trash.
4. Except as otherwise directed, cutting and trimming of existing trees will not be permitted.

B. Do not excavate within tree protection zones, unless otherwise indicated.

C. Where excavation for new construction is required within tree protection zones, hand clear and excavate to minimize damage to root systems. Use narrow-tine spading forks, comb soil to expose roots, and cleanly cut roots as close to excavation as possible.

1. Cover exposed roots with burlap and water regularly.
2. Temporarily support and protect roots from damage until they are permanently redirected and covered with soil.
3. Coat cut faces of roots more than 1-1/2 inches in diameter with an emulsified asphalt or other approved coating formulated for use on damaged plant tissues.
4. Backfill with soil as soon as possible.

D. Repair or replace trees and vegetation indicated to remain that are damaged by construction operations, in a manner approved by the Architect.

1. Employ an arborist, licensed in jurisdiction where Project is located, to submit details of proposed repairs and to repair damage to trees and shrubs.
2. Replace trees that cannot be repaired and restored to full-growth status, as determined by the Architect.

3.3 UTILITIES

A. Locate, identify, disconnect, and seal or cap off utilities indicated to be removed.

1. Arrange with utility companies to shut off indicated utilities.

B. Existing Utilities: Do not interrupt utilities serving facilities occupied by the City of Framingham Project Manager or others unless permitted under the following conditions and then only after arranging to provide temporary utility services according to requirements indicated:

1. Notify the Architect not less than two days in advance of proposed utility interruptions.
2. Do not proceed with utility interruptions without the City of Framingham's written permission.

C. Removal of underground utilities is included in Section 310000 – EARTH MOVING.

D. Removal of underground utilities is included in Division 2 Sections covering site utilities.

3.4 CLEARING AND GRUBBING

A. Remove obstructions, trees, shrubs, grass, and other vegetation to permit installation of new construction.

1. Do not remove trees, shrubs, and other vegetation indicated to remain or to be relocated.
2. Cut minor roots and branches of trees indicated to remain in a clean and careful manner where such roots and branches obstruct installation of new construction.
3. Grind stumps and remove roots, obstructions, and debris extending to a depth of 18 inches below exposed subgrade.
4. Use only hand methods for grubbing within tree protection zone.
5. Chip removed tree branches and dispose of off-site.

B. Fill depressions caused by clearing and grubbing operations with satisfactory soil material unless further excavation or earthwork is indicated.

1. Place fill material in horizontal layers not exceeding a loose depth of 8 inches and compact each layer to a density equal to adjacent original ground.

3.5 TOPSOIL STRIPPING

A. Remove sod and grass before stripping topsoil.

B. Strip topsoil to whatever depths are encountered in a manner to prevent intermingling with underlying subsoil or other waste materials.

1. Remove subsoil and nonsoil materials from topsoil, including trash, debris, weeds, roots, and other waste materials.

C. Stockpile topsoil materials away from edge of excavations without intermixing with subsoil. Grade and shape stockpiles to drain surface water. Cover to prevent windblown dust or contamination by air-borne weed seed.

1. Limit height of topsoil stockpiles to 72 inches.
2. Do not stockpile topsoil within tree protection zones.

3.6 EXCESS TOPSOIL

A. Topsoil that has been stripped and stockpiled, but is not needed after the completion of all final topsoil spreading and grassing, shall be stockpiled on site in a location to be approved by the User Agency and shall remain the property of the City of Framingham.

3.7 SITE IMPROVEMENTS

A. Remove existing above- and below-grade improvements as indicated and as necessary to facilitate new construction.

B. Remove slabs, paving, curbs, gutters, and aggregate base as indicated.

1. Unless existing full-depth joints coincide with line of demolition, neatly saw-cut length of existing pavement to remain before removing existing pavement. Saw-cut faces vertically.
2. Paint cut ends of steel reinforcement in concrete to remain to prevent corrosion.

3.8 DISPOSAL

A. Disposal: Remove surplus soil material, unsuitable topsoil, obstructions, demolished materials, and waste materials including trash and debris, and legally dispose of them off the City of Framingham's property.

1. Burning on site is prohibited.
2. Separate recyclable materials produced during site clearing from other nonrecyclable materials. Store or stockpile without intermixing with other materials and transport them to recycling facilities.

END OF SECTION

DO NOT REMOVE
THIS PAGE INTENTIONALLY LEFT BLANK

SECTION 31 20 00

EARTHWORK

PART 1 GENERAL

1.1. GENERAL

A. Drawings and General Provisions of the Contract apply to this Section.
B. Examine all drawings and all other Sections of the Specifications for requirements therein affecting the work of this and related Sections.
C. Coordinate work with that of all other trades affecting or affected by the work of this and related sections. Cooperation with such trades to assure the steady progress of all work under the Contract

1.2. DESCRIPTION OF WORK

A. Work to be done under this Section includes, but is not limited to, providing all labor, materials, equipment, and incidentals as necessary to conduct and complete the work specified herein and shown on the Drawings.

1. Pre-excavate along the alignments of the temporary excavation support system to bottom of previous foundation to remove obstructions and loose sands.
2. Excavate all materials, including soil, boulders, abandoned utilities, abandoned building foundations, construction debris, pavements, curbs, concrete slab, granite blocks, and all other materials as necessary to construct the improvements shown on the Drawings.
3. Preserve and protect existing and new site improvements and adjacent site improvements during the course of the Work.
4. Prepare, grade, shape, compact, and protect all subgrades, backfills, and ground surfaces for building, structures, and landscaping as shown on the Drawings.
5. Perform earthwork associated with Rammed Aggregate Pier (RAP) and/or Rigid Inclusion (RI) ground improvement design including but not limited to removal of obstructions, spoil removal, footing excavations, slab excavation, and footing/slab subgrade preparation, including but not limited to construction of load transfer platform and footing and slab pads, following RAP/RI installation.
6. Furnish materials from off-site source acceptable to Owner as required to complete the Work.
7. Control dust to specified level. No soil shall leave or be imported to the site without Owner's approval.
8. Place and compact backfill materials to construct the improvements shown on the Drawings.
9. Placement, settlement monitoring, and removal of surcharge as shown on drawings.
10. Subbase course for bituminous and cement concrete pavements.
11. Subsurface drainage backfill for walls and trenches.
12. Excavating, backfilling, and compacting for utility trenches
13. Placement of Ordinary Borrow for fill and embankment areas.
14. Placement gravel for base courses.

15. Crushed stone shall be installed in areas shown on the plans or as directed by the Engineer.
16. Segregate, handle, stockpile, manage, and reuse suitable excavated materials as specified in Contract Documents.
17. Contractor is responsible for the legal disposal, reuse, or recycling of all soil, excavated materials, and groundwater at locations acceptable to the Owner and in conformance with all federal, state, and local regulations.
18. Design, install, and maintain a temporary excavation support system for construction of the below-grade-space and other site improvements, as necessary, in accordance with the criteria herein and related Sections.
19. Coordination with maintenance of safe path of travel for the public.
20. Design, provide, install, operate, maintain, and remove temporary dewatering system to remove groundwater, perched groundwater, groundwater seepage, precipitation, and surface water runoff from excavations in accordance with required specified herein.
21. No soil or processed fill shall be brought onto the site without prior approval from the Owner's Representative.
22. It is hereby understood that the Contractor has carefully examined the site and all conditions affecting work under this Section. No claim for additional costs will be allowed because of a lack of knowledge of existing conditions as indicated in the Contract Documents, or obvious from observation of the site.
23. All work shall be conducted to meet project vibration criteria, settlement limits, and Town of Framingham and Fuller Middle School Project noise and dust criteria.
24. Removal of items covered by Section 012200 - UNIT PRICES as applicable.
25.

1.3. RELATED WORK SPECIFIED ELSEWHERE

A. Section 31 00 00 - Earth Moving
B. Section 31 23 19 - Dewatering
C. Section 31 63 17 - Aggregate Pier and Rigid Inclusion Ground Improvement
D. Division 02, 22, 23, and 26 Sections for installing underground mechanical and electrical utilities and buried mechanical and electrical structures.

1.4. DEFINITIONS

A. Owner: Town of Framingham, Massachusetts, Fuller Middle School
B. Architect: Jonathan Levi Architects
C. Engineer: Authorized representatives of the Architect or Owner
D. Owner's Representative: Authorize representatives of the Owner.
E. Site Improvement: When used in the context of "protecting adjacent site improvements" shall include, but not be limited to, buildings, utilities, pavements, roadways, slabs, sidewalks, curbs, foundations, slopes, and all other improvements and features that are outside the limits of the site, or those elements within the limits of the site that are to remain.
F. Zone of Influence (ZOI): The zone containing the bearing soils for soil-supported structures. The ZOI is defined by imaginary lines extending 3 feet laterally from the outside lower edges of the soil bearing structures and down a 1 horizontal to 1 vertical slope to the top of the natural, inorganic bearing soils or other approved bearing soils.
G. Unsuitable Material: Unsuitable material shall be material determined by the Engineer to be unsuitable in its natural location and condition as a foundation

material, as a sub-base, or as a part of the finished site work. Unsuitable material may include, but not limited to, clays, silts, very wet material, very plastic material, peat, muck, logs, stumps, roots, grass, sod, highly organic material, refuse, ashes, and other types of unsuitable material.

H. Satisfactory Soils: ASTM D2487 Soil Classification Groups GW, GP, GM, SW, SP, and SM or a combination of these groups; free of rock or gravel larger than 4 inches in any dimensions, debris, waste, frozen materials, vegetation, and other deleterious matter.
I. ASTM: American Society for the Testing and Materials.
J. AASHTO: American Association of State Highway and Transportation Officials
K. ACI: American Concrete Institute
L. AWS: American Welding Society (Standard Code for Welding in Building Construction)
M. Code: International Building Code 1009 with Massachusetts Amendments (Eighth Edition)
N. OSHA: Occupational Health and Safety Administration

1.5. REFERENCED STANDARDS

A. ASTM D 2487, Standard Practice for Classification of Soils for Engineering Purposes (Unified Soil Classification System)
B. ASTM D 1556-07, Standard Test Method for Density an Unit Weight of Soil in Place by the Sand-Cone Method
C. ASTM D 1557, Standard Test Methods for Laboratory Compaction Characteristics of Soil Using Modified Effort
D. ASTM D 3017, Standard Method for Water Content for Soil and Rock in Place by Nuclear Methods (Shallow Depth)
E. ASTM D 422 – 63 (2007), Standard Test Method for Particle-Size Analysis of Soils
F. ASTM D6938-08a, Standard Test Method for In-Place Density and Water Content of Soil and Soil-Aggregate by Nuclear Methods (Shallow Depth).
G. ASTM D4318-05, Standard Test Methods for Liquid Limit, Plastic Limit, and Plasticity Index of Soils.

1.6. PROJECT CONDITIONS

A. Refer to project Geotechnical Data and Engineering Report by RSE Associates (3 May 2019) for description of subsurface conditions encountered at boring locations. Note that the opinions expressed in this report are those of geotechnical engineer based on interpretations of subsurface conditions and tests on soil samples obtained from selected locations and depths. The existing subsurface data may not be sufficient to address all construction needs and the Contractor can make additional test borings as well as field and laboratory tests as necessary at no additional cost to the owner to fulfill Contractors' needs such as for the design of temporary support-of-excavation system.
B. Excavation to construct the proposed improvements will primarily be fill, organics, glacial lacustrine, and glacial outwash. Miscellaneous debris including but not limited to abandoned pipes, bricks, building materials … etc., may be present in the zone of excavation and below proposed slab and foundation.
C. Limit all vibrations to 0.5 inch per second or less at and in all buildings. The Contractor shall maintain the maximum cumulative horizontal movement at any point along the temporary excavation support wall, if used, to less than the limiting value of 1/4-in. Limit settlements of all adjacent structures, utilities, and other improvements to 1/4" or less.
D. Conduct all work within project and City noise and dust limits.

E. Existing Utilities: Do not interrupt utilities serving facilities occupied by others unless permitted in writing by the Owner and then only after arranging to provide temporary utility services according to Owner's requirements.
F. Demolish and completely remove from site existing underground utilities indicated to be removed. Coordinate with utility companies to shut off services if liens are active.
G. Survey Work: Engage a qualified land surveyor or professional engineer to survey adjacent existing buildings, structures, slope, and site improvements; establish exact elevations at fixed points to act as benchmarks. Clearly identify benchmarks and record existing elevations. During installation of excavation support and protection systems, regularly resurvey benchmarks, maintaining an accurate log of surveyed elevations and positions for comparison with original elevations and positions. Promptly notify Engineer if changes in elevations or positions occur or if cracks, sags, or other damage is evident in adjacent construction.
H. Notify the Engineer in writing if unexpected subsurface conditions are encountered.

1.7. QUALITY CONTROL

A. The Owner's Representative will observe the Contractor's earthwork activities, including temporary excavation support system installation, excavation, dewatering, subgrade preparation, and backfilling. The Contractor shall provide sufficient notice to Owner's Representative to allow the Owner's Representative to be present to observe and test the Work. The Owner's Representative shall make such tests of materials and samples as necessary to insure material and compaction requirements are achieved.
B. No soil shall be brought onto the site or removed from the site without approval by the Engineer.
C. The Owner's Representative shall be notified before each placement of backfill onsite.
D. The Owner's Representative will conduct field and laboratory testing to confirm compliance with the requirements of this Section. Field and laboratory testing will be conducted in general conformance with ASTM or other applicable reference standards. The Owner's Representative may also conduct vibration monitoring as necessary. The Contractor shall cooperate with the Owner's Representative in all respects to facilitate any testing or observations.
E. The presence of the Owner's Representative shall not relieve the Contractor of its responsibility to perform the Work in accordance with the Contract Documents, nor shall it be construed to relieve the Contractor from full responsibility for the means and methods of construction, protection of site improvements against damage, and for safety on the construction site.
F. The Contractor shall adhere to the applicable requirements of the Standard Specifications, OSHA Standards, and to all other applicable ordinances, codes, statutory rules, and regulations of federal, state, and local authorities having jurisdiction over the Work of this Section and other applicable Sections.
G. The Contractor may conduct additional geotechnical field and laboratory testing or screening for its own information at no additional cost to the Owner.
H. Work not in conformance with the specified requirements shall be improved, or removed and replaced, at no additional cost to the Owner. All costs related to testing of nonconforming Work or materials shall be paid for by the Contractor at no additional cost to the Owner.
I. Tolerances
   1. Construct finished soil and backfill surfaces to +/- ½ in. of the grades and elevations indicated on the Drawings.

2. Maintain the moisture content of fill material as it is being placed to levels that allow for compaction to the specified degree of compaction.

1.8. SUBMITTALS

A. General
1. The Contractor shall forward submittals to the Architect a minimum of 2 weeks prior to any planned work related to the Contractor's submittals.
2. The time period(s) for submittals are the minimum required by the Architect to review, comment, and respond to the Contractor. The Architect may require resubmission(s) for various reasons. The Contractor is responsible for scheduling specified submittals and resubmittals so as to prevent delays in the work.
3. The Contractor's submittals shall be reviewed and accepted by the Architect prior to conducting any work.
4. The Contractor's submittals shall be prepared and stamped by a Professional Engineer registered in the Commonwealth of Massachusetts, retained by the Contractor (unless otherwise approved by the Architect).
5. Acceptance of the Contractor's submittals by the Architect does not relieve the Contractor of the responsibility for the adequacy, safety, and performance of the Work.

B. Pre-excavation Photographs and Videotape: Show existing conditions of adjoining construction and site improvements, including finish surfaces, that might be misconstrued as damage caused by earthwork operations. Submit before earthwork begins. Maintain catalog of up-to-date photographs at the site.

C. Plan to Maintain Safe Path of Travel: Submit plans for maintaining safe paths of travel for the general public during the entire project, including requirement for police details of necessary.

D. Pre-excavation
1. Methods for pre-excavation along the alignments of the temporary excavation support systems including procedures for obstruction removal, excavation support, protection of site improvements, backfilling, and specific methods to support utilities within close proximity.

E. Mass Excavation
1. A narrative and drawings (plans and elevations) describing the schedule, sequence, and procedures for pre-excavation, temporary excavation support system installation, excavation, subgrade preparation, foundation construction, cold weather subgrade protection, backfilling, dewatering, soil handling, stockpiling, and other related activities.
2. Shop drawings and calculations of the proposed temporary excavation support system(s) signed and sealed by a qualified professional engineer showing details, location layout, elevations, allowable temporary traffic surcharge in the vicinity of the proposed excavation, and methods of sequence of installation, construction, and removal. The temporary support-of-excavation system shall not interfere with permanent structures and foundations.
3. Qualification of the installer and professional engineer currently registered in the Commonwealth of Massachusetts.
4. Dewatering design and layout during mass excavation.
5. Provide survey locations and description of any excavation support systems left in place.

F. Backfill Materials and Equipment

1. Proposed type and source of all fill and backfill materials. For each type of soil to be utilized as fill or backfill, the Contractor shall provide the following documentation:
   a. Two 50-lb bag samples of the proposed fill.
   b. Location of borrow source site, including name of the owner or facility name (from which the backfill originates) with contact phone number, email, street address, city, and state.
   c. Present and past usage of the source site and material.
   d. Volume of soil originating from each source area.
   e. Name of the qualified firm and analytical laboratory that performed the material sampling and testing.
   f. All existing report(s) associated with an assessment of the source site as relates to the presence of oil or hazardous materials.
2. The Contractor shall provide a grain size analysis, in accordance with ASTM D422 or ASTM D6913, and laboratory compaction curve, in accordance with ASTM D1557, for each onsite and borrow material proposed for backfill. Contractor shall provide additional grain size and compaction tests for every 200 cubic yards of the same material delivered to the site.
3. The Contractor shall, prior to the delivery of any incoming backfill material to be used at the project site, provide the contract information for the facility in which the backfill originates and the results of analytical testing of representative samples of the material for review and acceptance. The Contractor shall demonstrate that the incoming backfill material is naturally deposited soil and the analyte concentrations of the off-site backfill do not exceed the Reportable Concentrations RCS-1 of the MCP.
   a. The Contractor shall provide soil analyses for the following parameters: 8 RCRA meals; TCLP for any RCRA metal with total concentration in excess of the “20X rule”, Extractable and Volatile Petroleum Hydrocarbons (EPH/VPH) by Mass DEP methodologies; Volatile and Semi-Volatile Organic Compounds (by EPA Method 8260B with Method 5035 and EPA Method 8270, respectively), herbicides/pesticides and PCBs. The soil shall not contain any visual evidence of asbestos containing materials (ACMs).
   b. Urban backfill will not be accepted from off-site sources.
   c. No backfill will be accepted from off-site sources that are now or were formerly listed as sites regulated under the MCP.
   d. Test results must be submitted a minimum of four weeks prior to use of borrow to provide for data review by Owner.
   e. The Contractor shall provide an LSP opinion indicating the backfill material meets the criteria established above.
4. Details of compaction equipment, including descriptions, product literature, specifications and ratings, proposed for use in compacting fill and backfill materials.

PART 2 PRODUCTS

2.1 SOIL MATERIALS

A. All material to be imported to the site shall not contain concentrations of metals above naturally-occurring background levels as defined by the Department of Environmental Protection. All materials to be imported to the site shall not contain detectable amounts of al other oil and/or hazardous materials as defined by the Massachusetts Contingency Plan (CMR 40.0000).

B. Structural Fill: shall consist of granular inert material that is hard, durable stone and coarse sand, free of excess moisture, frozen lumps, roots, sod, trash, metal, plastic, clay, and other deleterious materials and conforming to the following specifications:

Maximum particle size	3 inches
Sieve ½" (12.5 mm)	50 – 85% passing
Sieve #4 (4.75 mm)	40 to 75% passing
Sieve #50 (300 □m)	8 – 28% passing
Passing #200 sieve (75 □m)	5% max.

Structural Fill shall be used below footings, sidewalks, slab-on grade, and at other locations shown on the Drawings or indicated in the Specifications. Structural Fill shall also be used to backfill above, below, and to the sides of new site structures and utilities and below pavements unless otherwise noted on the Drawings or approved by the Architect.

C. ¾-in Crushed Stone: shall conform to the requirement of item M2.01.4 of the MHD Standard Specifications for Highways and Bridges, dated 1988. Crushed Stone (3/4-in.) shall be washed at the source facility to remove fine-grained soils.

D. 1½-in Crushed Stone: shall conform to the requirements of item M2.01.4 of the MHD Standard Specifications for Highways and Bridges, dated 1988. Crushed stone (1-1/2-in.) shall be washed at the source facility to remove fine-grained soils.

E. Lean Concrete: shall have a maximum 28-day compressive strength of f'c = 1,500 psi, unless otherwise noted, with a maximum slump of 6 in. Lean concrete may be used to backfill excavations in lieu of Structural fill at locations proposed by the Contractor and approved by the Owner's Representative.

F. Gravel Borrow, Type C: Gravel Borrow, Type C, shall be used as pipe bedding, unless sown or directed otherwise by the Engineer, with the exception of Fiber Reinforced Pipe, place between 6 inches below pipe invert to 6 inches above pipe crown and shall meet the material requirements of Mass DOT Standard Specifications section M 1.03.0.

G. Process Gravel for Subbase: Shall be in accordance with Mass DOT Standard Specifications section M 1.03.1.

H. Sand Borrow: Sand Borrow shall be in accordance with Mass DOT Standard Specifications section M1.04.0.

I. Sand Borrow for Subdrains: Shall be in accordance with Mass DOT Standard Specifications section M1.04.1.

2.2 GEOTEXTILE AND GEOGRID

A. Geotextile shall be of type and properties required for specific application as determined by the Engineer.
   a. Geogrid used for subgrade reinforcement shall be TenCate Mirafi BXG 120 or similar.
   b. Geotextile used for marker barrier and provide separation around ¾ crushed stones placed around pipes shall be constructed of a non-woven high visibility geotextile, TenCate Mirafi Orange Delineation 140N or approved equal.
   c. Geotextile used for separation shall be non-woven TenCate Mirafi 140N or approved equal.
   d. Geotextile used below concrete sidewalk within the Amphitheater shall be TenCate Mirafi HP270 or equal.
   e. Geotextile used below bituminous concrete pavement within Amphitheater shall be TenCate Mirafi HP 570 or equal.

PART 3 EXECUTION

3.1 INSPECTION

A. Examine the site and report to the Architect in writing any conditions detrimental to the proper and timely completion of the Work of this Section. Do not proceed with the Work until unsatisfactory conditions have been corrected in an acceptable manner.
B. It is hereby understood that the Contractor has carefully examined the site and all conditions affecting work under this Section. No claim for additional costs will be allowed because of a lack of knowledge of existing conditions as indicated in the Contract Documents, or obvious from observation of the site.
C. Preconstruction survey of the Mass Bay Community College shall be performed documenting existing building conditions using combination of written observations, measurements, and photographs prior to commencement of construction activities at the site.
D. Preconstruction survey, consisting of written observations, measurements, and photographs prior to commencement of construction activities shall be performed for 85, 91, 99, 103, 105, 107, 109, and 111 Oaks Road, and 34 and 37 Fraser Road in Framingham, Massachusetts.
E. Preconstruction survey, consisting of written observations, measurements, and photographs prior to commencement of construction activities shall be performed for the existing Fuller Middle School in Framingham, Massachusetts.

3.2 DUST CONTROL

A. The Contractor shall employ dust control measures to minimize the creation of airborne dust during the entire construction process. As a minimum, standard dust control techniques shall be employed where heavy equipment will be traveling such as watering-down the site and routine street sweeping. The Contractor shall not utilize dust control measures that change the chemical characterization of site soils.
B. The acceptable limit for total airborne dust will be based on the National Primary Ambient Air Quality Standard as promulgated by the U.S. Environmental Protection Agency and as referenced by the Massachusetts Department of Environmental Protection. In brief, this standard establishes a maximum 24-hour permissible concentration of 150 micrograms per cubic meter and a real time 2-hr average of 200 micrograms per cubic meter. The Contractor shall immediately take measures to control dust if the limits are exceeded. The Contractor shall take all necessary steps to reduce and maintain dust levels below these levels.
C. In addition to all other standards and requirements, the Contractor shall take all measures to prevent visible airborne dust from leaving the site.

3.3 DEWATERING

A. The Contractor shall provide, at his own expense, adequate pumping and drainage facilities to maintain the excavated area sufficiently dry from groundwater and/or surface runoff so as not to adversely affect construction procedures nor cause excessive disturbance of underlying natural ground. The flow of all water resulting from pumping shall be managed so as not to cause erosion, siltation of drainage systems, or damage to adjacent property. The water from pumping shall be properly disposed of in accordance to federal, state, and local regulations
B. The Contractor shall control the grading in the area surrounding all excavations so that the surface of the ground will be properly sloped to prevent water from running into the excavation area. Where required, temporary ditches shall be provided to

control drainage. Upon completion of the work and when directed, all areas shall be restored by the Contractor in a satisfactory manner and as directed.

C. Any damage resulting from the failure of the dewatering operations of the Contractor, and any damage resulting from the failure of the Contractor to maintain all the area of work in suitable dry condition, shall be repaired by the Contractor, as directed by the Owner's Representative, at no additional expense to the Owner. The Contractor's pumping and dewatering operations shall be carried out in such a manner as to prevent damage to the Contract work and so that no loss of ground will result from these operations. Precautions shall be taken to protect new work from flooding during storms or from other causes. Pumping shall be continuous to protect the work and/or to maintain satisfactory progress.

3.4 GENERAL REQUIREMENTS

A. The Contractor shall conduct all work associated with excavation to maintain vibrations below limiting values listed in Contract Documents. Minimum of two vibration monitoring points are required at all time.

B. The Contractor shall expect to encounter remnants of utilities, foundations, granite blocks, masonry, concrete slabs, and other buried structures during pre-trenching, general excavation, and installation of temporary excavation support systems.

C. Excavation, backfilling, and other earthwork activities shall conform with the Contract Documents and submittals that are acceptable to the Architect. No work shall be performed unless it is conducted under the observation of the Architect, and in accordance with the submitted schedule and sequence.

D. Prevent erosion at the site at all times. The Contractor shall install all measures needed to control sediment and erosion as required by the Contractor operations, the weather conditions, and as directed by the Owner's Representative.

E. All excavated material shall be removed from the site and shall be legally disposed of by the Contractor in accordance with Project Specifications.

F. The Contractor can reuse excavated on-site soils as backfill at this site provided that the material meets the backfill requirement.

G. The Contractor shall not excavate or remove any material from within the site or right of way which is not within the excavation, as indicated, without written authorization from the Owner.

H. If unanticipated contaminated material is suspected or encountered during an excavation, the Contractor shall contact the Architect as soon as possible. The Architect will provide direction on how to proceed and disposition of the excavated material.

I. Unfavorable Weather

1. Freezing Weather
   a. Fill materials and/or concrete shall not be frozen and not placed on snow, ice, frozen subgrade, or uncompacted frozen soil.
   b. Fill material and lean concrete shall not be frozen when placed or be allowed to freeze prior to or after compaction or placement. At the end of each day's work during freezing weather, the last lift of fill, after compaction, shall be rolled by a smooth-wheeled roller to eliminate ridges of uncompacted soil. Fill materials and lean concrete shall be covered with insulating tarps or heated during freezing weather. The Contractor shall suspend backfilling operations and placement of lean concrete and any fill when air temperatures are below 32 degrees F.
   c. Soil bearing surfaces below completed slabs and foundations shall be protected against freezing, before and after concreting. Frost protection

shall be provided as soon as possible after foundations or structures are constructed in a manner acceptable to the Owner's Representative.

d. Do not excavate to final invert when freezing temperatures may be expected, unless the mat, footing, or slab is poured immediately after the excavation has been completed. Protect the excavation from frost if placing of concrete is delayed. Where footings, slabs or mudmats are exposed to freezing temperatures, they shall be protected to prevent damage to the concrete by freezing or frost penetration into the soil upon which they rest. Where foundations are exposed over the winter during construction, provide at least the equivalent of 4 ft of earth cover above the bottom surface of concrete.

2. Wet Weather

a. If fill material placement, spreading, rolling, or compaction operations are interrupted by rain or other unfavorable conditions, do not resume such operations until ascertaining that the moisture content and density of the previous placed soil are as required by these specifications.

J. The Contactor shall be responsible for the stability of excavation and overall onsite job safety. Shoring, trenching, and other excavation activities shall be in accordance with the latest requirements of the Department of Labor Occupational Health and Safety. The Contractor shall coordinate excavation activities to maintain vertical movements of the adjacent buildings and lateral movements below the Limiting Values.

3.5 PRETRENCHING/PRE-EXCAVATION

A. Pretrench along the alignments of the temporary excavation support systems to remove existing below grade structures. The Contractor shall propose methods for excavation and obstruction removal that are acceptable to the Owner's Representative. The pre-excavation shall extend from the ground surface to the bottom of the fill.

B. Backfill pretrench excavations with approved material that is suitable for re-excavation with nominal effort for future construction or to remain as the permanent backfill. No pretrench excavations shall be left open overnight.

3.6 EXCAVATION

A. The Contractor shall be responsible for the stability of excavation and overall onsite job safety. Shoring, trenching, and other excavation activities shall be in accordance with the latest requirements of the Department of Labor Occupational Health and Safety. The Contractor shall coordinate excavation activities to maintain vertical movements, lateral movements, and construction-induced vibrations below the Limiting Values.

B. Excavate to the lines and grades indicated, and no deeper unless approved. Conduct excavation in such a manner that movements of temporary excavation support systems, if present, are minimized and damage to adjacent buildings, structures and utilities is prevented. Prevent disturbance to soil subgrades and exercise care to preserve the material below and beyond the lines of all excavations.

C. Monitor excavation support and protection systems daily during excavation progress and for as long as excavation remains open. Promptly correct bulges, breakage, or other evidence of movement to ensure that excavation support and protection systems remain stable.

D. The use of tiebacks is not permitted on this Project.

E. When excavation has reached required subgrade elevations, notify the Owner's Representative, who will observe the excavation and bearing conditions. After review by the Owner's Representative, the excavation may be required to proceed deeper due to variation in subgrade conditions, presence of unsuitable soils at the design subgrade level, or Contractor disturbance of the subgrade. The Contractor shall overexcavate and replaced the excavated material with compacted Structural fill or Lean Concrete as directed by the Owner's Representative at no additional cost to the Owner.

F. Excavate trenches to the depth indicated or required. Carry the depth of trenches for piping to establish the indicated flow lines and invert elevations. Excavation for the convenience of the Contractor shall conform to limits acceptable to the Architect, and shall be at no additional cost to the Owner.

G. Unauthorized excavation consists of removal of materials beyond required subgrade elevations or dimensions without specific direction of the Architect. Backfill and compact unauthorized excavations with Structural Fill or Lean Concrete as specified for unauthorized excavation unless otherwise directed by the Owner's Representative. Unauthorized excavation, as well as remedial work directed by the Architect, shall be at the Contractor's expense.

H. Bottom of all excavations shall be properly proof-rolled, leveled and trimmed to the lines and grades required for Work. The final excavation for all footing and slab subgrades shall be performed with excavating equipment with a smooth-edged excavating bucket.

I. No excavation will be permitted below a line drawn downwards at a slope of 2 horizontal to 1 vertical from the underside of the closest edge of any proposed or in-place footing or utility at a higher elevation without providing adequate sheeting, bracing and/or underpinning to prevent loss of support of footing or utility.

J. Remove temporary excavation support and protection systems when construction has progressed sufficiently to support excavation and bear soil and hydrostatic pressures. Remove in stages to avoid disturbing underlying soils or damaging structures, pavements, facilities, and utilities. Repair or replace, as approved by Engineer, adjacent work damaged or displaced by removing excavation support and protection system.

3.7 SUBGRADE PREPARATION AND PROTECTION

A. General

1. Complete the excavation to the required subgrade elevation or bearing material.
2. All subgrades must be accepted by the Owner's Representative prior to placement of Structural Fill, Lean Concrete, or any structure over the subgrade.

B. The final excavation for all footing subgrades shall be at specified elevation bearing on load transfer platform specified by the RAP/RI Designer. The surface shall be proof-rolled, remain undisturbed and protected from disturbance prior to and during footing construction.

3.8 BACKFILLING

A. General

1. Backfilling activities, including placement and compaction, shall not be performed when air temperatures are at or below 32 degrees F.

2. Backfill excavation as promptly as work permits, but not until the subgrade, or below grade construction, is acceptable to the Owner's Representative
3. Previously placed, and possibly accepted, backfill shall be excavated and replaced at no additional cost if the backfill does not conform to the Contract Documents.
4. During compaction operations, incidental compaction due to traffic by construction equipment other than that used specifically in compaction operation will not be credited toward the required minimum coverages specified.
5. Compaction by puddling or flooding is prohibited.
6. Exercise care in placement of backfill against walls and directly in contact with waterproofed structures such that stones contained in the backfill do not damage waterproofing.
7. Repair any damage to waterproofing that occurs during placement and compaction operations at no additional cost to the Owner.
8. Control groundwater as required to permit efficient collection and removal with minimal disturbance to materials being placed.
9. Placement of fill and backfill shall be systematically conducted in the specified uniform layer thickness.
10. Backfill excavations as promptly as work permits but not until acceptance by the Owner's Representative and completion of quality control testing.
11. During utility trench backfill, place and compact bedding course on trench bottom and where indicated. Shape bedding course to provide continuous support for bells, joints, and barrels of pipe and for joints, fittings, and bodies of conduits. Bedding shall be placed, in layers not more than 6 inches thick in loose depth, and each layer shall be thoroughly and evenly compacted by tamping on each side of the pipe to provide uniform support around the pipe, free from voids. Crushed stone bedding material shall be placed in layers not more than 6-inches thick in loose measure, and compacted with at least 4 passes using a vibratory plate or roller compactor.

B. Backfill Materials

1. Backfill materials brought to the site must be obtained from an approved borrow source(s).
2. Backfill material below footings shall meet specifications of load transfer platform by the RAP/RI Designer.
3. Under grass and planted areas and below topsoil, use satisfactory soil material.
4. Under walks and pavements, use structural fill.
5. Under slabs, use required subgrade material specified by the RAP/RI Designer.
6. Under steps and ramps, use structural fill.
7. Behind retaining wall, use structural fill.

C. Compaction Equipment

1. In all cases, the Contractor shall only use compaction equipment that is deemed acceptable by the Owner's Representative or RAP/RI Designer compactions for areas above ground improvement.
2. Compact with a minimum of four passes/coverages of acceptable compaction equipment.
3. Compaction in confined areas (against walls, piers, and in trenches) shall be conducted with acceptable equipment such as hand-guided vibratory

compactors or mechanical tampers as approved by the Owner's Representative.

D. Placement, Compaction, and Protection

1. All backfill material shall be placed "in-the-dry" on subgrades acceptable to the Owner's Representative. The Contractor shall dewater excavated areas as required to perform the work in such a manner as to preserve the undisturbed state of the approved subgrade material.
2. Backfill materials shall not be placed on snow, ice, frozen subgrade, or uncompacted frozen soil.
3. Backfill material shall not be frozen when placed or be allowed to freeze prior to or after compaction, placement, or curing. At the end of each day's work during freezing weather, the last lift of fill, after compaction, shall be followed by smooth-wheeled roller to eliminate ridges of uncompacted soil.
4. In-place density tests shall be made in accordance with ASTM D1556, D6938 or D2167 as the work progresses, to determine the degree of compaction being attained by the contractor. Any corrective work required as a result of such tests, such as additional compaction, or a decrease in the thickness of layers, shall be performed by the Contractor at no additional expense to the Owner. In-place density testing shall be made at the Contractor's expense by the geotechnical testing laboratory.
5. In-place density tests shall be performed at a minimum one per footing if subgrade consists of structural fill. For footing subgrade consisting of ¾" crushed stones, testing requirement shall conform to specifications defined by RAP/RI Designer.
6. The degree of compaction is expressed as a percentage of the maximum dry density of the material at optimum moisture content as determined by ASTM Test D1557, Method C. The compaction requirement for Structural fill is 95% of the maximum dry density. Compaction requirement for satisfactory fill material is 95%.
7. Structural fill shall be placed and compacted in lift thickness not exceeding 8 inches.
8. Any trenches or excavations improperly backfilled or where settlement occurs shall be reopened, to the depth required for proper compaction then refilled and compacted with the surface restored to the required grade and condition, at no additional expense to the Owner.

E. Subsurface Drainage
1. Subdrainage Pipe: Specified in Division 2 Section "Subdrainage"
2. Subsurface Drain: Place subsurface drainage geotextile around perimeter of subdrainage trench. Place a 6-inch course of filter material on subsurface drainage geotextile to support subdrainage pipe. Encase subdrainage pipe in minimum of 12 inches of filter material, placed in compacted layers of 6 inches thick, and wrap in surface drainage geotextile, overlapping sides and ends at least 6 inches. Compact each filter material layer to 85% of maximum dray unit weight in accordance to ASTM D1557.

PART 4 MEASUREMENT AND PAYMENT

4.1 GENERAL

A. All work in this Section will be paid as part of the Base Contract Price and shall include furnishing all material, mobilization, labor, equipment, tools, and incidentals

necessary to complete the work shown on the Drawings and specified in the Contract Documents. No separate measurement or payment will be made for acquisition of permit, backfill, order control materials and application, equipment, material disposal, temporary excavation support systems, construction dewatering, stockpiling, police details, material rehandling, surveying, or other associated items or work considered incidental to the conduct the work of this Section. Compensation for all work required under this Section and not specifically covered elsewhere, shall be included in the Contract Lump Sum Price for Earthwork. For purposes of adjusting the scope of construction see the Unit Price Schedule. Unit prices for certain types of earthwork are included in Section 012200 - UNIT PRICES. Bid form is included in Section 005422 – BID ATTACHMENT UNIT PRICES SCHEDULE.

END OF SECTION 31 20 00

SECTION 31 23 19

DEWATERING

PART 1 - GENERAL

1.1 GENERAL PROVISIONS

A. Attention is directed to the CONTRACT AND GENERAL CONDITIONS and all Sections within DIVISION 01 - GENERAL REQUIREMENTS which are hereby made a part of this Section of the Specifications.

1.2 DESCRIPTION OF WORK

A. Work Included: Provide labor, materials and equipment necessary to complete the work of this Section, including but not limited to the following:

1. Construction dewatering.

B. Alternates: Not Applicable.

C. Items To Be Installed Only: Not Applicable.

D. Items To Be Furnished Only: Not Applicable.

E. Related Work: The following items are not included in this Section and will be performed under the designated Sections:

1. Section 31 20 00 – EARTH MOVING for soil materials, excavating, backfilling, and grading for the building, structures, slabs on grade, walls and foundations.
2. Section 31 00 00 - EARTH WORK for excavating, backfilling, site grading, and for site utilities.
3. Section 31 50 00 - EXCAVATION SUPPORT AND PROTECTION for shoring, bracing, and sheet piling of excavations.

1.3 PERFORMANCE REQUIREMENTS

A. Dewatering Performance: Design, furnish, install, test, operate, monitor, and maintain dewatering system of sufficient scope, size, and capacity to control hydrostatic pressures and to lower, control, remove, and dispose of ground water and permit excavation and construction to proceed on dry, stable subgrades.

1. Delegated Design: Design dewatering system, including comprehensive engineering analysis by a qualified professional engineer registered in the Commonwealth of Massachusetts, using performance requirements and design criteria indicated. All costs for delegated design shall be included in the bid price for the Work of this Section.

2. Test liquids for hazardous waste at start of construction operations and provide on-site remediation as acceptable to authorities having jurisdiction.
3. Continuously monitor and maintain dewatering operations to ensure erosion control, stability of excavations and constructed slopes, that excavation does not flood, and that damage to subgrades and permanent structures is prevented.
4. Prevent surface water from entering excavations by grading, dikes, or other means.
5. Accomplish dewatering without damaging existing buildings, structures, and site improvements adjacent to excavation.
6. Remove dewatering system when no longer required for construction.

1.4 SUBMITTALS

A. Shop Drawings: For dewatering system. Show arrangement, locations, and details of wells and well points; locations of risers, headers, filters, pumps, power units, and discharge lines; and means of discharge, control of sediment, and disposal of water.

1. Include layouts of piezometers and flow-measuring devices for monitoring performance of dewatering system.
2. Include a written plan for dewatering operations including control procedures to be adopted if dewatering problems arise.

B. Delegated-Design Submittal: For dewatering system indicated to comply with performance requirements and design criteria, including analysis data signed and sealed by the qualified professional engineer responsible for their preparation.

C. Qualification Data: For qualified Installer

D. Field quality-control reports.

E. Other Informational Submittals:

1. Photographs: Show existing conditions of adjoining construction and site improvements that might be misconstrued as damage caused by dewatering operations.

1.5 QUALITY ASSURANCE

A. Installer Qualifications: An experienced installer that has specialized in dewatering work.

B. Regulatory Requirements: Comply with governing EPA notification regulations before beginning dewatering. Comply with hauling and disposal regulations of authorities having jurisdiction.

C. Preinstallation Conference: Conduct conference at Project site to comply with requirements in Division 01.

1. Review methods and procedures related to dewatering including, but not limited to, the following:

a. Inspection and discussion of condition of site to be dewatered including coordination with temporary erosion control measures and temporary controls and protections.
b. Geotechnical report.
c. Proposed site clearing and excavations.
d. Existing utilities and subsurface conditions.
e. Coordination for interruption, shutoff, capping, and continuation of utility services.
f. Construction schedule. Verify availability of Installer's personnel, equipment, and facilities needed to make progress and avoid delays.
g. Testing and monitoring of dewatering system.
h. Control of dewatering equipment during non-work hours.

1.6 PROJECT CONDITIONS

A. Interruption of Existing Utilities: Do not interrupt any utility serving facilities occupied by the City of Framingham or others unless permitted under the following conditions and then only after arranging to provide temporary utility according to requirements indicated:

1. Notify City of Framingham Project Manager no fewer than two days in advance of proposed interruption of utility.
2. Do not proceed with interruption of utility without the City of Framingham Project Manager’s written permission.

B. Project-Site Information: A geotechnical report has been prepared for this Project and is available for information only. The opinions expressed in this report are those of geotechnical engineer and represent interpretations of subsoil conditions, tests, and results of analyses conducted by geotechnical engineer. The City of Framingham will not be responsible for interpretations or conclusions drawn from this data.

1. Make additional test borings and conduct other exploratory operations necessary for dewatering.
2. The geotechnical report is referenced elsewhere in the Project Manual.

C. Survey Work: Engage a qualified land surveyor or professional engineer licensed in the Commonwealth of Massachusetts to survey adjacent existing buildings, structures, and site improvements, establishing exact elevations at fixed points to act as benchmarks. Clearly identify benchmarks and record existing elevations.

1. During dewatering, regularly resurvey benchmarks, maintaining an accurate log of surveyed elevations for comparison with original elevations. Promptly notify Designer if changes in elevations occur or if cracks, sags, or other damage is evident in adjacent construction.

PART 2 - PRODUCTS (Not Used)

PART 3 - EXECUTION

3.1 PREPARATION

A. Protect structures, utilities, sidewalks, pavements, and other facilities from damage caused by settlement, lateral movement, undermining, washout, and other hazards created by dewatering operations.

1. Prevent surface water and subsurface or ground water from entering excavations, from ponding on prepared subgrades, and from flooding site and surrounding area.
2. Protect subgrades and foundation soils from softening and damage by rain or water accumulation.

B. Install dewatering system to ensure minimum interference with roads, streets, walks, and other adjacent occupied and used facilities.

1. Do not close or obstruct streets, walks, or other adjacent occupied or used facilities without permission from the City of Framingham Project Manager and authorities having jurisdiction. Provide alternate routes around closed or obstructed traffic ways if required by authorities having jurisdiction.

C. Provide temporary grading to facilitate dewatering and control of surface water.

D. Monitor dewatering systems continuously.

E. Promptly repair damages to adjacent facilities caused by dewatering.

F. Protect and maintain temporary erosion and sedimentation controls, which are specified in Section 31 25 00 - EROSION AND SEDIMENTATION CONTROLS during dewatering operations.

3.2 INSTALLATION

A. Install dewatering system utilizing wells, well points, or similar methods complete with pump equipment, standby power and pumps, filter material gradation, valves, appurtenances, water disposal, and surface-water controls.

1. Space well points or wells at intervals required to provide sufficient dewatering.
2. Use filters or other means to prevent pumping of fine sands or silts from the subsurface.

B. Before excavating below ground-water level, place system into operation to lower water to specified levels. Operate system continuously until drains, sewers, and structures have been constructed and fill materials have been placed or until dewatering is no longer required.

C. Provide an adequate system to lower and control ground water to permit excavation, construction of structures, and placement of fill materials on dry subgrades. Install sufficient

dewatering equipment to drain water-bearing strata above and below bottom of foundations, drains, sewers, and other excavations.

1. Do not permit open-sump pumping that leads to loss of fines, soil piping, subgrade softening, and slope instability.

D. Reduce hydrostatic head in water-bearing strata below subgrade elevations of foundations, drains, sewers, and other excavations.

1. Maintain piezometric water level a minimum of 24 inches below surface of excavation.

E. Dispose of water removed by dewatering in a manner that avoids endangering public health, property, and portions of work under construction or completed. Dispose of water and sediment in a manner that avoids inconvenience to others. Provide sumps, sedimentation tanks, and other flow-control devices as required by authorities having jurisdiction.

F. Provide standby equipment on site, installed and available for immediate operation, to maintain dewatering on continuous basis if any part of system becomes inadequate or fails. If dewatering requirements are not satisfied due to inadequacy or failure of dewatering system, restore damaged structures and foundation soils at no additional expense to the City of Framingham.

1. Remove dewatering system from Project site on completion of dewatering. Plug or fill well holes with sand or cut off and cap wells a minimum of 36 inches below overlying construction.

G. Damages: Promptly repair damages to adjacent facilities caused by dewatering operations.

3.3 FIELD QUALITY CONTROL

A. Observation Wells: Provide, take measurements, and maintain at least the minimum number of observation wells or piezometers indicated; additional observation wells may be required by authorities having jurisdiction.

1. Observe and record daily elevation of ground water and piezometric water levels in observation wells.
2. Repair or replace, within 24 hours, observation wells that become inactive, damaged, or destroyed. In areas where observation wells are not functioning properly, suspend construction activities until reliable observations can be made. Add or remove water from observation-well risers to demonstrate that observation wells are functioning properly.
3. Fill observation wells, remove piezometers, and fill holes when dewatering is completed.

B. Provide continual observation to ensure that subsurface soils are not being removed by the dewatering operation.

END OF SECTION

DO NOT REMOVE
THIS PAGE INTENTIONALLY LEFT BLANK

SECTION 31 25 00

EROSION AND SEDIMENTATION CONTROLS

PART 1 - GENERAL

1.1 GENERAL PROVISIONS

A. Attention is directed to the CONTRACT AND GENERAL CONDITIONS and all Sections within DIVISION 01 - GENERAL REQUIREMENTS which are hereby made a part of this Section of the Specifications.

1.2 DESCRIPTION OF WORK

A. Work Included: Provide labor, materials and equipment necessary to complete the work of this Section, including but not limited to the following:

1. Control measures to prevent all erosion, siltation and sedimentation of wetlands, waterways, construction areas, adjacent areas and off-site areas.
2. Control measures shall be accomplished adjacent to or in the following work areas:
   a. Soil stockpiles and on-site storage and staging areas.
   b. Cut and fill slopes and other stripped and graded areas.
   c. Constructed and existing swales and ditches.
   d. Retention ponds.
   e. At edge of wetlands areas, if applicable, as shown on Drawings.
3. Additional means of protection shall be provided by the Contractor as required for continued or unforeseen erosion problems, at no additional cost to the City of Framingham.
4. Periodic maintenance of all sediment control structures shall be provided to ensure intended purpose is accomplished. Sediment control measures shall be in working condition at the end of each day.
5. After any significant rainfall, sediment control structures shall be inspected for integrity. Any damaged device shall be corrected immediately.

B. Alternates: Not Applicable.

C. Items To Be Installed Only: Not Applicable.

D. Items To Be Furnished Only: Not Applicable.

E. Related Work: The following items are not included in this Section and will be performed under the designated Sections:

1. Section 312000 - EARTH MOVING for soil materials, excavating, backfilling, and grading for the building, structures, slabs on grade, walls and foundations.
2. Section 311000 - SITE CLEARING for protection of existing tress and other vegetation to remain.

3. Section 310000 - EARTH WORK for soil materials, excavating, backfilling, and site grading and removal of site utilities.

1.3 QUALITY ASSURANCE

A. When applicable, comply with the requirements of Stormwater Pollution Prevention Plan prepared for the NPDES permit, which are incorporated herein by reference, and all other applicable requirements of governing authorities having jurisdiction. The specifications and drawings are not represented as being comprehensive, but rather convey the intent to provide complete slope protection and erosion control for both the project site and adjacent property.

1. Provide temporary erosion and sedimentation control measures to prevent soil erosion and discharge of soil-bearing water runoff or airborne dust to adjacent properties and walkways, according to a sediment and erosion control plan specific to the site, that complies with EPA 832/R-92-005 or requirements of authorities having jurisdiction, whichever is more stringent.
2. Regulatory Order of Conditions ((Attach to the end of this Section, when applicable))

B. Erosion control measures shall be established at the beginning of construction and maintained during the entire period of construction. On-site areas which are subject to severe erosion, and off-site areas which are especially vulnerable to damage from erosion and/or sedimentation, are to be identified and receive special attention.

C. All land-disturbing activities are to be planned and conducted to minimize the size of the area to be exposed at any one time, and the length of time of exposure.

D. Surface water runoff originating upgrade of exposed areas should be controlled to reduce erosion and sediment loss during the period of exposure.

E. When the increase in the peak rates and velocity of storm water runoff resulting from a land-disturbing activity is sufficient to cause accelerated erosion of the receiving stream bed, provide measures to control both the velocity and rate of release so as to minimize accelerated erosion and increased sedimentation of the stream.

F. All land-disturbing activities are to be planned and conducted so as to minimize off-site sedimentation damage.

G. The Contractor is responsible for cleaning out and disposing of all sediment once the storage capacity of the sediment facility is reduced by one-half.

H. Inspect, repair, and maintain erosion and sedimentation control measures during construction until permanent vegetation has been established.

I. Remove erosion and sedimentation controls and restore and stabilize areas disturbed during removal.

PART 2 - PRODUCTS

2.1 MATERIALS

A. Straw Bales: Wire or nylon bound bales of straw, oriented around sides, rather than over and under.

B. Straw wattles shall be made of straw of oats, wheat, barley, rye, or natural straw inside a flexible and durable tubular netting with metal clips or knotted ends, and shall be utilized to control sediment runoff during construction activities. The minimum size for the straw wattles is 12-inch diameter. Furnish oak wood stakes 2 inch x 2 inch x 4 feet long or 1/2 inch x 4 feet long rebar with safety caps.

C. Stakes: Stakes for bales shall be one of the following materials: Wood stakes of sound hardwood 2 by 2 inches in size or steel reinforcing bars of at least No. 4 size. Lengths shall be approximately three feet.

D. Siltation Fence: Fabricated or prefabricated unit consisting of the following filter fabric properties:

1.	Grab Tensile Strength	90	ASTM D1682
2.	Elongation at Failure (%)	50	ASTM D1682
3.	Mullen Burst Strength (PSI)	190	ASTM D3786
4.	Puncture Strength (lbs)	70	ASTM D751 (modified)
5.	Slurry Flow Rate (gal/min/sf)	0.5	Virginia DOT VTM-51
6.	Equivalent Opening Size	40-80	US Std Sieve CW-02215
7.	Ultraviolet Radiation Stability (%)	90	ASTM G26

E. Fencing: Steel posts shall be standard 6 foot long metal stamped drive stakes commonly used to support snow fences. Fencing shall be new four foot height wood lath snow fencing. Provide suitable steel staples or heavy nylon cord for securing filter cloth to support system.

F. Protective Measures: As temporary coverings on ground areas subject to erosion, provide one of the following protective measures, and as directed by the Architect with concurrence of the City of Framingham:

1. Hay or straw temporary mulch, 100 pounds per 1,000 square feet.
2. Wood fiber cellulose temporary mulch, 35 pounds per 1,000 square feet.
3. Tackafier for anchoring mulch or straw shall be a non-petroleum based liquid bonding agent specifically made for anchoring hay or straw.
4. Provide natural (jute, wood excelsior) or man-made (glass fiber) covering with suitable staples or anchors to secure to ground surface. Note that wire stapes and non-biodegradable coverings shall not be used for any area that will be mown turf.
5. Temporary vegetative cover for graded areas shall be undamaged, air dry threshed straw or hay free of undesirable weed seed.

PART 3 - EXECUTION

3.1 STRAW BALE BARRIERS

A. Excavation shall be to the width of the bale and the length of the proposed barrier to a minimum depth of 4 inches.

B. Bales shall be placed in a single row, lengthwise on proposed line, with ends of adjacent bales tightly abutting one another. In swales and ditches the barrier shall extend to such a length that the bottoms of the end bales are higher in elevation than the top of the lowest middle bale.

C. Staking shall be accomplished to securely anchor bales by driving at least two stakes or rebars through each bale to a minimum depth of 18 inches.

D. The gaps between bales shall be filled by wedging straw in the gaps to prevent water from escaping between the bales.

E. The excavated soil shall be backfilled against the barrier. Backfill shall conform to ground level on the downhill side and shall be built up to 4 inches on the uphill side. Loose straw shall then be scattered over the area immediately uphill from a straw barrier.

F. Inspection shall be frequent and repair or replacement shall be made promptly as needed.

3.2 STABILIZED CONSTRUCTION ENTRANCE AND STONE BERMS

A. Stone size: Use ASTM designation C-33, size No. 2 (1-1/2” to 2-1/2”). Use crushed stone.

B. Length: As effective, but not less than 50 feet.

C. Thickness: Not less than eight inches.

D. Width: Not less than full width of all points on ingress or egress, but not less than 25 feet.

E. Washing: When necessary, wheels shall be cleaned to remove sediment prior to entrance onto public right-of-way. When washing is required, it shall be done on an area stabilized with crushed stone which drains into an approved sediment trap or sediment basin. All sediment shall be prevented from entering any storm drain, ditch, or watercourse through the use of sand bags, gravel boards or other approved methods.

F. Maintenance: The entrance shall be maintained in a condition which will prevent tracking or flowing of sediment onto public rights-or-way. This may require periodic top dressing with additional stone as conditions demand and repair and/or cleanout of any measures used to trap sediment. All sediment spoiled, dropped, washed or tracked onto public rights-of-way must be removed immediately.

G. Place crushed stone berms in locations required and as directed. Berms shall have side slopes of 1:3 or less.

H. Inspect stone berms periodically and replace and/or regrade crushed stone as required.

3.3 SILT FENCING

A. Excavate a 6 inch trench along the upstream side of the desired fence location.

B. Drive fence posts a minimum of 1'-6" into the ground. Install fence, well-staked at maximum eight foot intervals in locations as shown on Drawings. Secure fabric to fence and bury fabric end within the six inch deep trench cut.

C. Lay lower 12 inches of silt fence into the trench, 6 inches deep and 6 inches wide. Backfill trench and compact.

D. Overlap joints in fabric at post to prevent leakage of silt at seam.

3.4 EROSION CONTROL GRASSING

A. Grassing shall be applied according to State of Massachusetts Highway Department Standard Specifications.

3.5 INLET PROTECTION

A. Install silt fence or straw bales around inlet as specified herein.

3.6 DUST CONTROL

A. Throughout the construction period the Contractor shall carry on an active program for the control of fugitive dust within all site construction zones, or areas disturbed as a result of construction. Control methods shall include the following: Apply calcium chloride at a uniform rate of one and one-half (1-1/2) pounds per square yard in areas subject to blowing. For emergency control of dust apply water to affected areas. The source of supply and the method of application for water are the responsibility of the contractor.

B. The frequency and methods of application for fugitive dust control shall be as directed by the Architect with concurrence by the City of Framingham.

3.7 TEMPORARY PROTECTIVE COVERINGS (AFTER GROWING SEASON)

A. Place temporary covering for erosion and sedimentation control on all areas that have been graded and left exposed after October 30. Contractor shall have the choice to use either or both of the methods described herein.

B. Hay or straw shall be anchored in-place by one of the following methods and as approved by the Architect with concurrence by the City of Framingham: Mechanical "crimping" with a tractor drawn device specifically devised to cut mulch into top two inches of soil surface or application of non-petroleum based liquid tackifier, applied at a rate and in accordance with manufacturer's instructions for specific mulch material utilized.

C. Placement of mesh or blanket matting and anchoring in place shall be in accordance with manufacturer's printed instructions.

D. Inspect protective coverings periodically and reset or replace materials as required.

END OF SECTION

SECTION 31 50 00

EXCAVATION SUPPORT AND PROTECTION

PART 1 - GENERAL

1.1 GENERAL PROVISIONS

A. Attention is directed to the CONTRACT AND GENERAL CONDITIONS and all Sections within DIVISION 01 - GENERAL REQUIREMENTS which are hereby made a part of this Section of the Specifications.

1.2 DESCRIPTION OF WORK

A. Work Included: Provide labor, materials and equipment necessary to complete the work of this Section, including but not limited to the following:

1. Temporary excavation support and protection systems.

B. Alternates: Not Applicable.

C. Items To Be Installed Only: Not Applicable.

D. Items To Be Furnished Only: Not Applicable.

E. Related Work: The following items are not included in this Section and will be performed under the designated Sections:

.

1. Section 31 23 19 - DEWATERING for dewatering system for excavations.

1.3 PERFORMANCE REQUIREMENTS

A. Design, furnish, install, monitor, and maintain excavation support and protection system capable of supporting excavation sidewalls and of resisting soil and hydrostatic pressure and superimposed and construction loads.

1. Provide professional engineering services needed to assume engineering responsibility, including preparation of Shop Drawings and a comprehensive engineering analysis by a qualified professional engineer registered in the Commonwealth of Massachusetts.
2. Prevent surface water from entering excavations by grading, dikes, or other means.
3. Install excavation support and protection systems without damaging existing buildings, pavements, and other improvements adjacent to excavation.
4. Provide vibration monitoring to prevent impacts on adjacent structures and utilities.

1.4 SUBMITTALS

A. Shop Drawings: Prepared by or under the supervision of a qualified professional engineer for excavation support and protection systems.

1. Include Shop Drawings signed and sealed by the qualified professional engineer responsible for their preparation.

B. Qualification Data: For Installer and professional engineer.

C. Photographs or videotape, sufficiently detailed, of existing conditions of adjoining construction and site improvements that might be misconstrued as damage caused by the absence of, the installation of, or the performance of excavation support and protection systems.

1.5 QUALITY ASSURANCE

A. Preinstallation Conference: Conduct conference at Project site to comply with requirements in Division 01.

1. Review methods and procedures related to excavation support and protection system including, but not limited to, the following:

a. Geotechnical report.
b. Existing utilities and subsurface conditions.
c. Proposed excavations.
d. Proposed equipment.
e. Monitoring of excavation support and protection system.
f. Working area location and stability.
g. Coordination with waterproofing.
h. Abandonment or removal of excavation support and protection system.

1.6 PROJECT CONDITIONS

A. Interruption of Existing Utilities: Do not interrupt any utility serving facilities occupied facilities unless permitted under the following conditions and then only after arranging to provide temporary utility according to requirements indicated:

1. Notify the City of Framingham Project Manager no fewer than two days in advance of proposed interruption of utility.
2. Do not proceed with interruption of utility without The City of Framingham Project Manager's written permission.

B. Project-Site Information: A geotechnical report has been prepared for this Project and is available for information only. The opinions expressed in this report are those of geotechnical engineer and represent interpretations of subsoil conditions, tests, and results of analyses conducted by geotechnical engineer. The City of Framingham will not be responsible for interpretations or conclusions drawn from the data.

1. Make additional test borings and conduct other exploratory operations necessary for excavation support and protection.
2. The geotechnical report is referenced elsewhere in the Project Manual.

C. Survey Work: Engage a qualified land surveyor or professional engineer to survey adjacent existing buildings, structures, and site improvements; establish exact elevations at fixed points to act as benchmarks. Clearly identify benchmarks and record existing elevations.

1. During installation of excavation support and protection systems, regularly resurvey benchmarks, maintaining an accurate log of surveyed elevations and positions for comparison with original elevations and positions. Promptly notify Designer if changes in elevations or positions occur or if cracks, sags, or other damage is evident in adjacent construction.

PART 2 - PRODUCTS

2.1 MATERIALS

A. General: Provide materials that are either new or in serviceable condition.

B. Structural Steel: ASTM A 36/A 36M, ASTM A 690/A 690M, or ASTM A 992/A 992M.

C. Steel Sheet Piling: ASTM A 328/A 328M, ASTM A 572/A 572M, or ASTM A 690/A 690M; with continuous interlocks.

D. Cast-in-Place Concrete: ACI 301, of compressive strength required for application.

E. Reinforcing Bars: ASTM A 615/A 615M, Grade 60, deformed.

F. Timber Piling: ASTM D 25, species listed in AWPA C3, pressure-treated in accordance with AWPA C3.

G. Seven Wire Strand: ASTM A 416, Grade 250 or 270., uncoated seven-wire, low-relaxation strand.

H. Grout: Suitable for service, minimum 4,000 psi.

PART 3 - EXECUTION

3.1 PREPARATION

A. Protect structures, utilities, sidewalks, pavements, and other facilities from damage caused by settlement, lateral movement, undermining, washout, and other hazards that could develop during excavation support and protection system operations.

1. Shore, support, and protect utilities encountered.

B. Install excavation support and protection systems to ensure minimum interference with roads, streets, walks, and other adjacent occupied and used facilities.

1. Do not close or obstruct streets, walks, or other adjacent occupied or used facilities without permission from the City of Framingham Project Manager and authorities having jurisdiction. Provide alternate routes around closed or obstructed traffic ways if required by authorities having jurisdiction.

C. Locate excavation support and protection systems clear of permanent construction so that forming and finishing of concrete surfaces are not impeded.

D. Monitor excavation support and protection systems daily during excavation progress and for as long as excavation remains open. Promptly correct bulges, breakage, or other evidence of movement to ensure that excavation support and protection systems remain stable.

E. Promptly repair damages to adjacent facilities caused by installing excavation support and protection systems.

3.2 SOLDIER BEAMS AND LAGGING

A. Install steel soldier beams before starting excavation. Space soldier beams at regular intervals not to exceed allowable flexural strength of wood lagging. Accurately align exposed faces of flanges to vary not more than 2 inches from a horizontal line and not more than 1:120 out of vertical alignment.

B. Install wales horizontally at spacings indicated on the approved shop drawings and secure to soldier beams.

3.3 SHEET PILING

A. Before starting excavation, install one-piece sheet piling lengths and tightly interlock to form a continuous barrier. Limit vertical offset of adjacent sheet piling to 60 inches. Accurately align exposed faces of sheet piling to vary not more than 2 inches from a horizontal line and not more than 1:120 out of vertical alignment. Cut tops of sheet piling to uniform elevation at top of excavation.

3.4 TIEBACKS

A. Tiebacks: Drill for, install, grout, and tension tiebacks into position. Test load-carrying capacity of each tieback and replace and retest deficient tiebacks.

1. Test loading shall be observed by a qualified professional engineer responsible for design of excavation support and protection system.
2. Maintain tiebacks in place until permanent construction is able to withstand lateral earth and hydrostatic pressures.
3. Inspect tiebacks periodically to confirm anchors exhibit no movement.

3.5 BRACING

A. Bracing: Locate bracing to clear columns, floor framing construction, and other permanent work. If necessary to move brace, install new bracing before removing original brace.

1. Do not place bracing where it will be cast into or included in permanent concrete work, unless otherwise approved by Engineer.
2. Install internal bracing, if required, to prevent spreading or distortion of braced frames.
3. Maintain bracing until structural elements are supported by other bracing or until permanent construction is able to withstand lateral earth and hydrostatic pressures.

3.6 REMOVAL AND REPAIRS

A. Remove excavation support and protection systems when construction has progressed sufficiently to support excavation and bear soil and hydrostatic pressures. Remove in stages to avoid disturbing underlying soils or damaging structures, pavements, facilities, and utilities.

1. Remove excavation support and protection systems to a minimum depth of 48 inches below overlaying construction and abandon remainder.
2. Fill voids immediately with approved backfill compacted to density specified in Section 31 20 00 - EARTH WORK or 31 00 00 – EARTH MOVING, as applicable.
3. Repair or replace, as approved by Engineer, adjacent work damaged or displaced by removing excavation support and protection systems.

END OF SECTION

DO NOT REMOVE
THIS PAGE INTENTIONALLY LEFT BLANK

Section 31 63 17

GROUND IMPROVEMENT – AGGREGATE PIER AND RIGID INCLUSION

PART 1 - GENERAL

1.1 DESCRIPTION

A. Work shall consist of designing, furnishing and installing Rammed Aggregate Pier (RAP) and/or Rigid Inclusion (RI) ground improvement to the lines and grades designated on the project foundation plans and related quality control testing and performance testing as specified herein. The work shall also consist of providing inspection and certification of the construction of load transfer platform prior to foundation and slab construction. RAP elements shall be in a columnar-type configuration and shall be used for support of footing and slab-on-grade loads. RAP elements shall be constructed by either augering a cavity or driving a hollow mandrel to the design depth and vertically ramming lifts of aggregate using the specially designed tamper head and high-energy impact densification equipment to create the compacted aggregate pier. Rigid Inclusions are columns of grout used to reinforce the round to increase bearing capacity and reduce settlement of a structure of embankment. Rigid Inclusions are constructed using an auger displacement tool or vibrated pipe tool that displaces soil laterally, producing very little spoils.

1.2 WORK INCLUDED

A. Provision of all equipment, material, labor and supervision to design and install RAP and/or RI elements. Design shall rely on subsurface information presented in the project geotechnical report by RSE Associates dated 3 May 2019. Survey layout RAP/RI elements, spoil removal (as required), footing excavations, and foot/slab subgrade preparation following RAP/RI installation is not included.

B. The RAP/RI design and installation shall adhere to all methods and standards described in the Specification.

C. Drawings and General Provisions of the Contract, including General and Supplemental Conditions, and Division 1 Specifications, apply to the work in this specification.

1.3 APPROVED INSTALLERS

A. The RAP/RI (the Installer) shall be approved by the Owner's Geotechnical Representative (RSE Associates) prior to bid opening. Without exception, no alternate installer will be accepted unless approved by the Owner's Geotechnical Representative at least two (2) weeks prior to bid opening. The Owner's Geotechnical Representative is hereinafter referred to as "Geotechnical Representative".

B. Installers shall have a minimum of 5 years of experience with the installation of RAP systems, completed at least 50 RAP projects in New England, and completed at least 10 RAP projects in the Commonwealth of Massachusetts.

C. Installers licensed by the Geopier Foundation Company, Inc. (www.geopier.com) are hereby accepted as approved installers.

1.4 REFERENCE STANDARDS

A. Design

1. "Control of Settlement and Uplift of Structures Using Short Aggregate Piers," by Evert C. Lawton (Assoc. Prof., Dept. of Civil Eng., Univ. of Utah), Nathaniel S. Fox (President, Geopier Foundation Co., Inc.), and Richard L. Handy (Distinguished Prof. Emeritus, Iowa State Univ., Dept. of Civil Eng.), reprinted from *IN-SITU DEEP SOIL IMPROVEMENT*, *Proceedings of sessions sponsored by the Geotechnical Engineering Division/ASCE in conjunction with the ASCE National Convention held October 9-13, 1994, Atlanta, Georgia*.
2. “Settlement of Structures Supported on Marginal or Inadequate Soils Stiffened with Short Aggregate Piers,” by Evert C. Lawton and Nathaniel S. Fox. *Geotechnical Special Publication No. 40: Vertical and Horizontal Deformations of Foundations and Embankments,* ASCE, 2, 962-974.
3. “Technical Bulletin No. 12, Proper Load Testing Procedures to Verify Adequate Design of Geopier-Supported Foundation Systems,” by Kord Wissmann and W. Lake Carter, Geopier Foundation Company, Inc. ©2015.

B. Modulus Testing

1. ASTM D 1143 - Pile Load Test Procedures
2. ASTM D 1194 - Spread Footing Load Test

C. Materials and Inspection

1. ASTM D 1241 - Aggregate Quality
2. ASTM D 422 - Gradation of Soils

D. Where specifications and reference documents conflict, the RAP/RI Design Engineer (the Designer) shall make the final determination of the applicable document.

1.5 DESCRIPTION

A. Qualifications – With reference to Paragraph 1.3.B, the Installer shall submit the following with their proposal to document/demonstrate the minimum experience requirements for this project.

1. Documentation verifying a minimum of 50 previous projects completed in New England, including at least 10 successful projects where subsurface conditions included an organic layer (peat or organic silt) thickness of at least 3- to 10-feet-thick within the ground improvement zone. For the minimum 10 projects with organic layers within the ground improvement zone, the Installer shall submit references with contact information for the Geotechnical Representative and General Contractor.
2. For the minimum 10 previous projects completed in the Commonwealth of Massachusetts, the Installer shall submit references with contact information for the Geotechnical Representative and General Contractor.

B. Design Submittal - The Installer shall submit detailed design calculations and construction drawings prepared by the Designer for review and approval by the Geotechnical Representative and the project Structural Engineer. All plans shall be sealed by a Professional Engineer licensed in the Commonwealth of Massachusetts. The submittal shall include grout/cement mix design as applicable.

C. Professional Liability Insurance - The Designer shall have Errors and Omissions design insurance for the work. The insurance policy should provide a minimum coverage of $3 million per occurrence.

D. Modulus Test Reports - A modulus test(s) shall be performed on minimum of one non-production RAP and one non-production RI element, if used, as required by the Designer to verify the design assumptions. The Installer shall furnish the General Contractor a description of the installation equipment, installation records, complete test data, analysis of the test data and verification of the design parameter values based on the modulus test results. The report shall be prepared under direction of a Registered Professional Engineer licensed in the Commonwealth of Massachusetts.

E. Daily RAP/RI Progress Reports - The Installer shall furnish a complete and accurate record of RAP/RI installation to the General Contractor. The record shall indicate the element location, length, volume of aggregate used or number of lifts, densification forces during installation, and final elevations or depths of the base and top of elements. The record shall also indicate the type and size of the installation equipment used, and the type of aggregate used. The Installer shall immediately report any unusual conditions encountered during installation to the General Contractor, the Designer, and the Geotechnical Engineer.

PART 2 - PRODUCTS

2.1 AGGREGATE

A. Aggregate used by the Installer for element construction shall be pre-approved by the Designer and shall demonstrate suitable performance during modulus testing. Typical aggregate consists of Type 1 Grade B in accordance with ASTM D-1241-68, No. 57 stone, or other graded aggregate approved by the Designer.

B. Clean, potable water or other suitable source shall be used to mix grout and increase aggregate moisture content where required. The General Contractor shall provide such water to the Installer.

2.2 GROUT/CEMENT

A. For RI elements, grout shall consist of a homogeneous mixture of Portland Cement conforming to the ASTM Standard C150/C150M, sand, and clean, potable water. Documentation for other additives shall be submitted for review. The components shall be proportioned and mixed to produce a grout capable of maintaining the solids in suspension, minimizing bleed and being pumped without difficulty. The required grout strength shall be determined by the Designer.

B. RAP elements constructed with cement-treated aggregate (CTA) or grout will not be allowed.

2.3 REINFORCING STEEL

A. Reinforcing steel, if required, shall conform to the requirement of Designer.

2.4 GEOGRID/GEOTEXTILE

A. Geogrid and geotextile, if required per Designer., shall conform to and be installed in accordance with manufactures specifications and guidelines, as per details in RAP/RI Design Drawings.

PART 3 – DESIGN REQUIREMENTS

3.1 RAP/RI DESIGN

A. The RAP system shall be designed in accordance with locally-accepted engineering practice and the methods described in Section 1 of these Specifications. The design life of the structure shall be 75 years.

B. The design shall meet the following performance criteria:

Footings

*Maximum Allowable Bearing Pressure for Footings Supported by RAP Reinforced Soils	4,000 psf
Total Settlement for Footings:	≤ 1-inch
Differential Settlement of Adjacent Footings:	≤ ½-inch

Slab-on-Grade

Slab-on-grade carrying load	450 psf
Settlement of Slabs-on-Grade:	≤ ½-inch
Differential Settlement of slab-on-grade:	≤ ¼-inch

Amphitheater within 30 ft of Building

Settlement of Amphitheater:	≤ ½-inch
Differential Settlement of Amphitheater:	≤ ¼-inch

C. If fully grouted/cemented elements (Rigid Inclusions) are proposed in lieu of ungrouted/uncemented RAP elements, then a granular Footing Pad (or "Load Transfer Platform") shall be required below all footings and slabs to be supported by Rigid Inclusions. The system shall be designed and perform to limit penetration (punching) of ground improvement elements into the Footing Pad.

D. If any boring (or other exploration) with the proposed building footprint indicates an organic layer (peat or organic silt) and/or soft clay layer that is ≥ 3-feet-thick within the ground improvement zone, the RAP design submittal for the slab-on-grade shall include a Finite Element Analysis (FEA) to demonstrate that the maximum bending moment and maximum shear stress at the midpoint of the most widely-

spaced slab support RAP elements are within tolerances specified by the project Structural Engineer. For the FEA, the minimum RAP stiffness modulus value shall be determined based on modulus testing (see Section 5.02). The stiffness modulus value shall be reduced exponentially for each foot of radial distance away from the edge of the RAP element in accordance with a referenced industry-accepted standard(s).

E. The Rammed Aggregate Pier elements shall be designed using a Rammed Aggregate Pier stiffness modulus to be verified by the results of the modulus test described in Section 5.02.

3.2 DESIGN SUBMITTAL

A. The Installer shall submit detailed design calculations, construction drawings, and shop drawings, (the Design Submittal), for review and approval at least 2 week(s) prior to the beginning of construction.

B. The design information shall include, but not be limited to, element configurations, materials, capacity and spacing, details and design of Footing Pads/Load Transfer Platform (if Footing Pads are required), bearing capacity analysis, settlement analyses, global stability analysis (if necessary), explanation of assumed soil properties, element installation termination criteria, embedment depth into the bearing stratum, and all other relevant information.

C. With reference to paragraph 5.02.C, the design calculations shall quantify the RAP element's maximum design stress on an individual element (which attracts more stress than the surrounding matrix soil) and is typically at least 3 to 5 times the allowable bearing pressure for footings.

D. A detailed explanation of the design parameters for settlement calculations shall be included in the Design Submittal.

E. If Rigid Inclusions elements are proposed, the Installer shall submit information demonstrating the integrity of the grouted/cemented shaft based on prior or newly proposed full-scale field testing, exhumation of shafts, or similar methods.

F. If Rigid Inclusions (which require Footing Pads) are proposed, the Installer shall submit information demonstrating the performance of the proposed Footing Pad design based on prior or newly proposed full-scale testing, including demonstrating that excessive punching will not occur per paragraph 3.01.C.

G. The quality control test program for the RAP system, meeting the design requirements described herein, shall be submitted.

H. All calculations and drawings shall be prepared and sealed by a Professional Engineer licensed in the Commonwealth of Massachusetts.

I. Submittals shall be submitted electronically only unless otherwise required by specific submittal instructions.

PART 4 – EXECUTION

4.1 SITE VISIT

Site visits are necessary in order to be aware of conditions at the work site.

A. Pre Bid Site Visit: Prior to submitting a bid price for the RAP/RI program, the RAP/RI contractor shall visit the site during the project prebid meeting to identify readily visible conditions in order to account for them in the bid.

B. Existing Structures: Prior to initiating work, a condition survey of structures in the immediate vicinity of the work shall be performed by the General Contractor to determine that the conditions are safe to perform the specified work. The structure(s) must be examined prior to initiating work to document preexisting cracks/damage. The structure(s) must also be monitored for movement during any work withinin 25 feet of the structure(s). The work shall be stopped and the engineer notified if any negative structural impacts are observed (settlement, increase in crack width, etc.).

4.2 SITE PREPARATION

The following shall be performed by the General Contractor in support of the RAP/RI Contractor:

A. Removal of all surface or subsurface topsoil, brush, organic material, and other unacceptable material in accordance with the requirements of the contract documents. Removal of any surface or subsurface obstructions to the RAP/RI work.

B. Site shall be graded to an agreed working elevation. A dry, level, and stable working platform shall be provided and maintained throughout the work. Platform stability should be evaluated and certified by the owner's geotechnical engineer and the general contractor, based on equipment information provided by the specialty contractor.

C. Provision of all-weather access and maintenance thereof for the RAP/RI Contractor's equipment and workforce, and for delivery of materials to the worksite.

D. Horizontal and vertical survey control and survey layout of building corners, grid lines, footing locations, embankment limits, utilities etc., for reference by the RAP/RI Contractor for layout and performance of the RAP/RI work.

4.3 APPROVED INSTALLATION PROCEDURES

The following sections provide general criteria for the construction of the RAP/RI elements. Unless otherwise approved by the Designer, the installation method used for RAP/RI element construction shall be that as used in the construction of the successful modulus test.

A. General

1. The Installer shall provide a qualified, full-time, solely-dedicated, quality control (QC) person on-site during the installation process. The QC person

shall not be dual-purposed as crew laborer or operator. Automated, electronic, and/or remote quality control will not be accepted as a replacement for the QC person. Refer to Section 5.01 for further detail.

2. The explorations indicate the presence of a continuous (or sporadic/intermittent) organic layer (peat or organic silt) and/or soft clay layer within the ground improvement zone that is 2-feet to 10-feet thick. The ground improvement design/approach shall include RI elements through such layers below all footings to account for the possibility that such layers could be encountered anywhere within the proposed building footprint, not only in localized areas. The Designer/Installer may choose to RI elements more frequently than these minimum requirements, such as below slab areas and/or below footings where the organic and/or soft clay layer is less than 3-feet-thick.
3. In addition to peat and organic silt layers, fill with a total organic content (including solid wood or roots component) greater than 10% shall be considered an organic layer.
4. At a minimum, RAP/RI elements must be designed and installed to fully-penetrate through the fill and organics layers and minimum of 1-foot into underlying natural glacial lacustrine and glacial outwash. RAP/RI elements terminating within fill or organic soil layers will not be accepted, even if mandrel/probe resistance is demonstrated to be relatively high based on crowd testing or amperage build-up.
5. Vibration levels at existing buildings must be maintained below 0.5 inches per second.

B. RAP Elements Installed Using Displacement Installation Methods

1. Displacement RAP systems shall be constructed by advancing a specially designed mandrel with a minimum 15 ton static force augmented by dynamic vertical ramming energy to the full design depth. The hollow-shaft mandrel, filled with aggregate, is incrementally raised, permitting the aggregate to be released into the cavity, and then lowered by vertically advancing and/or ramming to densify the aggregate and force it laterally into the adjacent soil. The cycle of raising and lowering the mandrel is repeated to the top of RAP element elevation. The cycle distance shall be determined by the Designer.
2. Special high-energy impact densification apparatus shall be employed to vertically densify the RAP elements during installation of each constructed lift.
3. Densification shall be performed using a mandrel/tamper. The mandrel/tamper foot is required to adequately increase the lateral earth pressure in the matrix soil during installation.
4. Downward crowd pressure shall be applied to the mandrel during installation.
5. Pre-augering may be used to help the mandrel penetrate through relatively dense soil areas.

C RI shall be constructed in accordance with and at locations as shown on approved design and shop drawings.

1. The RI tool shall be advanced to design depth or tool refusal. During grouting the RI tool shall be filled with a grout volume adequate to maintain a positive grout head for the RI withdrawal of the tool. Grout is placed fully to the final RI cutoff elevation.

2. The grout shall be supplied at a sufficient rate during tool withdrawal to ensure that a continuous element of the full specified cross-section is formed, free from debris. The depth of the tool and volume of grout shall be measured and recorded for each element. If the grout placement in any element cannot be completed as described above, then the element shall be re-penetrated before grout has hardened and grout placed to the final RI cutoff elevation or the RI shall be completely replaced.
3. Obstructions: Obstructions encountered during advancement of the RI tool that will prevent installation to the design depth, or cause the RI tool to redirect from its design location during installation shall be removed.
4. Obstruction include, but are not limited to: boulders, timbers, concrete, bricks, utility lines, etc. that prevent advancement of the RI tool to the required depth or cause the RI tool to redirect from the design location. Dense natural soil, natural rock or weathered rock shall not be considered obstructions. The RI design engineer shall be notified within 24 hours of any obstructions or unexpected early refusal to verify the revised location and/or depth are acceptable.
5. Diameter of RIs: The RIs shall be constructed to the diameter shown on the project drawings or the approved shop drawings.
6. Depth of work: The RIs shall be constructed to the depth/elevation shown on the approved shop. RI installation rigs shall be equipped with instrumentation to measure, display and record the tool penetration rate versus depth.
7. Grout shall be cast to the final RI cutoff elevation unless otherwise specified. If necessary, to protect Rigid Inclusions from damage due to subsequent construction activities, elements shall be dipped out prior to initial set and backfilled with gravel or granular fill. Alternatively, a steel reinforcing member may be installed into the upper portion of the element to protect against damage

D. Subsequent Construction: A Load Transfer Platform (LTP) shall be constructed over the RI heads to transfer the design loads to the elements

1. The LTP shall be constructed of a specified granular material and may be reinforced with one or more layers of biaxial geogrid and/or geotextile as shown in the approved RI design and shop drawings.
2. Construction of the LTP shall not commence until the compressive strength of the grout has reached a value provided by the Designer. LTP material, lift thickness, and compaction shall conform to the approved RAP/RI design and shop drawings. Testing requirements shall be equal to those required by the project geotechnical engineer of record. Materials shall conform to those specified in the approved RAP/RI design and shop drawings.
3. Construction of the LTP shall be installed in a manner as to avoid direct contact with cured rigid inclusions. The RAP/RI Contractor and RAP/RI Design Engineer shall be notified if any heavy machinery makes contact with a cured RI during LTP construction or excessive rutting is experienced adjacent to cured RIs. Replacement RIs may be required if RIs are damaged during LTP construction. Cost of construction of the replacement RI shall be borne by the General Contractor or LTP installer.
4. The General Contractor's inspector and RAP/RI's Design Engineer shall monitor LTP construction. Compaction shall be performed and accomplished

as specified in the contract drawings for structural fill or LTP construction. Reinforcement and concrete placement shall be performed in a timely manner so that no degradation of the bearing surface occurs. In the case of foundation construction, if foundation concrete cannot be placed on the same day that excavation takes place, then a minimum 3-inch thick mud mat shall be placed immediately following approval of the footing excavation and LTP construction.

4.2 PLAN LOCATION AND ELEVATION OF RAP ELEMENTS

The as-built center of each RAP/RI element shall be within 6 inches of the locations indicated on the plans.

4.3 REJECTED RAP ELEMENTS

RAP/RI elements installed beyond the maximum allowable tolerances shall be abandoned and replaced with new elements, unless the Designer approves the condition or provides other remedial measures. All material and labor required to replace rejected elements shall be provided at no additional cost to the Owner, unless the cause of rejection is due to an obstruction or mislocation.

PART 5 – QUALITY CONTROL

5.1 QUALITY CONTROL TECHNICIAN

The Installer shall have a qualified, full-time, solely-dedicated, quality control (QC) person to verify and report all installation procedures. The Installer shall immediately report any unusual conditions encountered during installation to the Designer, the General Contractor, and to the observing Geotechnical Representative. The quality control procedures shall include the preparation of RAP/RI Progress Reports completed during each day of installation containing the following information:

A. Footing and RAP/RI element location with identification number of the pier.

B. Pre-auger diameter and soil conditions encountered during drilling (if required).

C. RAP/RI element length.

D. Planned and actual RAP/RI element elevations at the top and bottom of the element.

E. Average lift thickness of each RAP/RI element.

F. Volume of aggregate used in each element.

G. The maximum amperage drawn by the electric motor (if compaction equipment used)

H. Continuous depth/amperage if available (if compaction equipment used)

I. Documentation of any unusual conditions encountered.

J. Type and size of densification equipment used.

5.2 SINGLE-ELEMENT RAP MODULUS TEST(S)

A minimum of one single-element RAP Modulus Test and one single-element RI Modulus Test, if used, shall be performed at a location agreed upon by the Designer and the Geotechnical Representative to verify or modify the RAP/RI design. The modulus tests shall be of the type and installed in a manner specified herein.

A. Modulus test procedures shall utilize appropriate portions of ASTM D 1143 and ASTM D 1194 and comply with Technical Bulletin No. 12 (Wissmann and Carter, 2015).

B. The test plate/cap shall have the same diameter as the RAP/RI element design diameter and shall not extend beyond the edge of the RAP/RI element and over the matrix soil.

C. With reference to Technical Bulletin No. 12 (Wissmann and Carter, 2015), the test element shall be tested to a load equal to the element area times at least 150 percent of the RAP element's maximum design stress (not allowable bearing pressure for footings) to demonstrate that the element exhibits safe response during service loading. The RAP element's maximum design stress is the maximum stress on the individual element (which attracts more stress than the surrounding matrix soil) and is typically at least 3 to 5 times the allowable bearing pressure for footings. Single-element modulus tests that are proposed to be loaded as a function of allowable bearing pressure are not considered standard practice and will not be accepted since the allowable bearing pressure is often only a fraction of the RAP element's maximum design stress. Modulus tests that are proposed to be loaded as a function of allowable bearing pressure shall be performed per Paragraph 5.02.I.

1. If Rigid Inclusions are proposed in lieu of ungrouted/uncemented and subgrade soils at the bottom of the footing (or footing pad) consist of organic soils and/or soft to very soft cohesive soils, then the Rigid Inclusion design capacity shall conservatively be calculated using the total bottom-of-footing load divided by the number of Rigid Inclusions.

2. If Rigid Inclusions are proposed in lieu of ungrouted/uncemented, then the Rigid Inclusion test element shall be tested to at least 200 percent of the Rigid Inclusion design capacity to demonstrate that the element exhibits safe response during service loading.

3. If Rigid Inclusions are proposed in lieu of ungrouted/uncemented, then a granular Footing Pad shall be required below all footings and slabs to be supported by Rigid Inclusions. The Footing Pad shall be designed by the Designer and shall be at least 12-inches-thick.

D. A telltale shall be installed at the bottom of the test element so that bottom-of-element deflections may be determined. For ungrouted/uncemented RAP elements, acceptable performance is indicated when the bottom of the element deflection is no more than 30% of the top of element deflection at the design stress level.

E. ASTM D-1143 general test procedures shall be used as a guide to establishing load increments, load increment duration, and load decrements. As a minimum, the following loading increments, decrements and duration shall be used.

Increment	Approximate Load (percent design)	Minimum Duration (min)	Maximum Duration (min)
Seat	< 9	0	N/A
1	17	15	60
2	33	15	60
3	50	15	60
4	67	15	60
5	83	15	60
6	100	15	60
7	117	60	120
8	133	15	60
9	150	15	60
10	100	N/A	N/A
11	66	N/A	N/A
12	33	N/A	N/A
13	0	N/A	N/A

F. With the exception of the load increment representing approximately 117% of the RAP element maximum design stress, all load increments shall be held for a minimum of 15 minutes. Loads are then maintained until the rate of deflection reduces to 0.01 inch per hour or for the maximum of 1 hour, whichever is occurs first.

F. Creep Test - The load increment that represents approximately 117% of the RAP element maximum design stress shall be held for a minimum of 15 minutes. Loads are then maintained until the rate of deflection reduces to 0.01 inch per hour or for the maximum of 4 hours, whichever is occurs first.

1. If Rigid Inclusions are proposed in lieu of ungrouted/uncemented or partially grouted/cemented RAP elements, then the creep test shall be performed at the load increment that represents approximately 133% of the RAP element maximum design stress.

H. A seating load equal to 5 percent of the total load shall be applied to the loaded steel plate prior to application of load increments and prior to measurement of deflections to compensate for surficial disturbance.

I. Single-element modulus tests that are proposed to be loaded as a function of allowable bearing pressure are not considered standard practice and will not be accepted. Modulus tests that are proposed to be loaded as a function of allowable bearing pressure must consist of full-scale spread footing load tests that include a test footing supported by a minimum of three RAP elements and having a RAP area-replacement ratio (AreaRAPs/AreaFooting) that is representative of the smallest area replacement ratio used in the RAP design. The test spread footing

shall be loaded to at least 200 percent of the allowable bearing pressure to demonstrate that the RAP-supported footing exhibits safe response during service loading.

5.3 BOTTOM STABILIZATION TESTING (BSTs)/CROWD STABILIZATION TESTING (CSTs)

Bottom stabilization testing (BSTs) or Crowd stabilization testing (CSTs) shall be performed by the Quality Control Technician during the installation of the modulus test element. Additional testing as required by the Designer shall be performed on selected production RAP elements to compare results with the modulus test element.

PART 6 –QUALITY ASSURANCE

6.1 Designer's Quality Assurance

The Installer shall provide full-time Quality Control monitoring of RAP construction activities. The RAP/RI Designer shall provide Quality Assurance services.

6.2 Responsibilities of Designer's Quality Assurance

A. The Designer shall monitor the modulus test element installation and testing. The Installer shall provide and install all dial indicators and other measuring devices.

B. The Designer shall monitor the installation of RAP elements to verify that the production installation practices are similar to those used during the installation of the modulus test element(s).

C. With reference to Paragraph 4.01.A.5, the Designer shall monitor vibrations and immediately report to the Installer and General Contractor if specified tolerances are exceeded.

D. The Designer shall report any discrepancies to the Installer and General Contractor immediately.

E. The Designer shall observe the excavation and compaction/preparation of subgrade prior to placement of the foundations as described in Section 7.05.

PART 7 – RESPONSIBILITIES OF THE GENERAL CONTRACTOR

7.1 Site Preparation and Protection

A. The General Contractor shall locate and protect underground and aboveground utilities and other structures from damage during installation of the RAP elements.

B. Site grade for RAP/RI installation shall be at El. 165.5 to El. 166.5. Ground elevations and bottom of footing elevations shall be provided to the Installer in sufficient detail to estimate installation depth elevations to within 3 inches.

C. The General Contractor will provide site access to the Installer, after site preparation in the area has been completed. A flat and stable working pad subgrade shall be established and maintained by the General Contractor to provide wet weather protection of the subgrade and to provide access for efficient operation of the RAP installation. Preparation of a flat and stable working pad may include placement of crushed stone and geotextile fabric. Any excavation or backfilling that occurs for working pad preparation shall be in accordance with the Designer's submittal.

D. Prior to, during and following RAP/RI installation, the General Contractor shall provide positive drainage to protect the site from wet weather and surface ponding of water.

E. If spoils are generated by RAP/RI installation, spoil removal from the RAP/RI work area in a timely manner to prevent interruption of RAP/RI installation is required.

7.2 RAP/RI LAYOUT

The location of individual RAP/RI elements shall be marked in the field using flagged and numbered whiskers at locations shown on the drawings.

7.3 EXCAVATION FOR OBSTRUCTIONS

A. Should any obstruction be encountered during RAP/RI installation, the General Contractor shall be responsible for promptly removing such obstruction or the element shall be relocated if possible. Obstructions include, but are not limited to, boulders, timbers, concrete, granite blocks, utilities, etc., which shall prevent placing the elements to the required depth, or shall cause the RAP/RI element to drift from the required location.

B. Dense natural rock or weathered rock layers shall not be deemed obstructions, and RAP elements may be terminated short of design lengths on such materials.

7.4 UTILITY EXCAVATIONS

The General Contractor shall coordinate all excavations made subsequent to RAP/RI installations so that excavations do not encroach on the elements as shown in the RAP construction drawings. Protection of completed RAP/RI elements is the responsibility of the General Contractor. In the event that excavations are required in close proximity to the installed RAP/RI elements, the General Contractor shall contact the Designer immediately to develop construction solutions to minimize impacts on the installed RAP elements.

7.5 FOOTING AND SLAB SUBGRADE PREPARATION

A. Excavation and subgrade preparation of all footing and slab subgrades shall be the responsibility of the General Contractor and performed in conformance with the Project Specifications and RAP/RI design submittal.

B. Excavations will expose the tops of RAP/RI elements and shall be made in a workman-like manner that protects the subgrade until structural fill or concrete placement. Procedures and equipment shall be selected to avoid subgrade/RAP/RI element disturbance and exposure to water.

C. All excavations for footing bottoms supported by RAP/RI elements shall be prepared in the following manner by the General Contractor. Recommended procedures for achieving these goals are to:

1. Limit over-excavation below the bottom of the footing to 3-inches (including disturbance from the teeth of the excavation equipment).

2. Compaction of surface soil and top of RAP/RI elements shall be prepared using a motorized impact compactor ("Wacker Packer," "Jumping Jack," or similar). Sled-type tamping devices shall only be used in granular soils and when approved by the Designer. Loose or soft surficial soil over the entire footing bottom shall be recompacted or removed, respectively. The surface of the RAP/RI elements shall be recompacted prior to completing footing bottom preparation.

3. Place footing concrete immediately after footing excavation is made and approved, preferably the same day as the excavation. Footing concrete must be placed on the same day if the footing is bearing on moisture-sensitive soils. If same day placement of footing concrete is not possible, open excavations shall be protected from surface water accumulation. A lean concrete mud-mat may be used to accomplish this. Other methods must be pre-approved by the Designer.

D. The following criteria shall apply, and a written inspection report sealed by the RI/RAP Designer shall be furnished to the Installer to confirm:

1. That water has not been allowed to pond in the footing excavation at any time. Ponded water may soften the unconfined matrix soil between and around the RAP elements, and may have detrimental effects on the supporting capability of the RAP reinforced subgrade.

2. That all RAP elements designed for each footing have been exposed in the footing excavation.

3. That immediately before footing construction, the tops of RAP elements exposed in each footing excavation have been inspected and recompacted as necessary with mechanical compaction equipment.

4. That no excavations or drilled shafts (elevator, etc) have been made after installation of RAP elements within the excavation limits described in the RAP construction drawings, without the written approval of the Installer or Designer.

E. Designer shall provide the above inspection and certification necessary to satisfy the written or implied warranty on the performance of the RAP/RI system.

PART 8 – PAYMENT

8.1 Method of Measurement

A. Payment shall cover design, one mobilization, one modulus test on each type of ground improvement element used, preparation of ground improvement plans and specifications, installation of RAP/RI elements, quality assurance, demobilization, and quality assurance of Load Transfer Platform/footing pad/slab pad. Excavation of unsuitable materials and obstructions by others, delays, re-engineering, added modulus tests, added RAP elements, and added mobilization/demobilization as documented by the Owner's Representative and approved by the Owner or General Contractor, shall be paid for under separate pay items.

8.2 Basis of Payment

A. Payment will be made as follows:

Pay Item:	Pay Unit:
One mobilization, one modulus test for RAP, one modulus Test for RI, preparation of RAP/RI design, plans and specifications, installation of RAP/RI elements, quality assurance and demobilization	$____ Lump Sum
Additional ungrouted RAP elements due to obstructions or Owner design changes	$____ / Linear Foot Installed
Additional RI elements due to obstructions or Owner design changes	$____ / Linear Foot Installed
Additional modulus tests	$____ Each
Additional mobilizations/demobilizations	$____ Each
Quality assurance of Load Transfer Platform/ Footing Pad/Slab Pad	$ _____ Lump Sum

B. Unit prices for certain types of earthwork are included in section 012200 - UNIT PRICES. Bid form is included in section 005422 – BID ATTACHMENT UNIT PRICES SCHEDULE.

End of Section

DO NOT REMOVE
THIS PAGE INTENTIONALLY LEFT BLANK

Section 32 00 00
LANDSCAPE IMPROVEMENTS

PART 1 - GENERAL

1.1 GENERAL REQUIREMENTS

A. The conditions and general requirements of the Contract, Division 0 and applicable parts of Division 1, apply to the work under this Section.

B. All references to products by Performance Specifications shall be as determined by the Landscape Architect and the City, per MGL c. 30 s. 39M, part b, criteria 1.

1.2 WORK INCLUDED

A. Provide all labor, equipment, implements and materials required to furnish, install, construct and perform all site improvements complete as shown on the Drawings and specified herein.

B. To be included, but not limited to the following:

1. Bike Racks;

2. Basketball Hoops and Poles;

3. Stonedust Paving;

4. Steel Edging;

5. Peastone Drip Edge.

1.3 REFERENCES

A. Examine all other Sections of the Specifications and all Drawings for the relationship of the work under this Section and the work of other trades. Cooperate with all trades and all departments of the City and coordinate all work under this Section therewith.

B. The following related items are included under the Sections listed below:

1. Section 03 10 01 – Concrete Forming and Accessories

2. Section 03 20 01 – Concrete Reinforcing

3. Section 03 30 01 – Cast In Place Concrete

4. Section 05 50 00 – Metal Fabrications

5. Section 31 20 00 – Earthwork

6. Section 31 25 00 – Erosion and Sedimentation Controls

1.4 SUBMITTALS AND SHOP DRAWINGS

A. Electronically submit shop drawings, product literature, catalog cuts and / or samples for all items indicating material characteristics, fabrications, details of construction, connections and relationship with adjacent construction, called for

on the Drawings and as specified and in accordance with applicable requirements under Division 1. If not submitting above materials electronically, submit five complete copies.

1. Bike Racks;

2. Basketball Hoop & Pole;

3. Stonedust Paving;

4. Steel Edging;

5. Peastone Drip Edge.

B. Take field measurements prior to preparation or shop drawings and fabrication. Allow sufficient time for shop drawing review and approval, before fabricating or ordering.

C. Do not order materials or begin installation of Work of this Section until Owner's / Landscape Architect's approval of submittals has been obtained. Delivered materials shall closely match approved samples.

1.5 SAMPLES

A. Initial Selection Samples: Submit samples showing complete range of colors, textures and finishes available for each material used.

B. Verification Samples: Submit representative samples of each material that is to be exposed in the finished work, showing the full range of color and finish variation expected.

1.6 PRODUCT LITERATURE

A. For each product or material used, submit manufacturer’s product data, including installation instructions, use, limitations and recommendations.

1.7 PRODUCT DELIVERY, STORAGE AND HANDLING

A. Deliver materials in manufacturer's original unopened and undamaged packages and containers with labels legible and intact.

B. Store and handle materials in accordance with manufacturer’s instructions. Prevent damage and deterioration of products from the environment and construction operations.

C. Handle in accordance with manufacturer's instructions.

1.8 JOB CONDITIONS

A. Examine all surfaces to receive site improvements to see that they are in proper condition to receive the Work specified. Report to the Landscape Architect in writing all unacceptable areas. All defects resulting from use of accepted surfaces shall be corrected by the appropriate Contractor at no additional expense to the Owner.

B. Start of Work under this Section shall constitute acceptance of the site conditions to which this Work is to be applied. Site preparation shall be of proper approved

quality. Any defects in Work resulting from such conditions shall be corrected under this Section, at no extra cost to the Owner.

C. Environmental Requirements: Contractor shall not Work on or with soils when they are dry, wet, or frozen. Field Test: Form soil in palm of hand; if soil retains shape and crumbles upon touching, then it may be worked; (if it will not retain its shape, it is too dry; if it does not crumble, it is too wet). Landscape Architect shall be final authority on condition of soil.

1.9 DEFINITIONS

A. The following items are included herein and shall mean:

1. A.A.S.H.T.O. - American Association of State Highway and Transportation Officials.

2. S.S.H.B. - Standard Specifications for Highway and Bridges, the Commonwealth of Massachusetts, Department of Public Works, latest edition.

3. A.S.T.M. - American Society for Testing and Materials.

4. CPSC - Consumer Product Safety Council.

5. ADA - Americans with Disabilities Act and its current regulations.

6. AWS: American Welding Society.

7. SSPS: Steel Structures Painting Council.

1.10 WARRANTIES

A. Attention is directed to provisions of the CONDITIONS OF THE CONTRACT and applicable parts of Division 1 regarding guaranties and warranties.

B. Manufacturers shall provide their standard guaranties for Work specified in the Section. However, such guaranties shall be in addition to and not in lieu of all other liabilities which manufacturers and Contractor may have by law or by other provisions of the Contract Documents.

1.11 QUALITY ASSURANCE

A. Comply with applicable codes, ordinances and regulations. Provide products of acceptable manufacturer, which have been in satisfactory, similar service for three years. Use experienced installers.

PART 2 - PRODUCT

2.1 BIKE RACKS

A. Bicycle Racks shall be as detailed in the drawings and consist of the following materials.

B. Materials

1. Body: Cast Aluminum

2. Hardware and Mounting Plate: Stainless Steel

C. Finishes:

1. Body: Polyester Powdercoat:

a. Color to be chosen by Landscape Architect, and Architect from manufacturer's full line of color options.

D. Dimensions: 5” long x 4” wide x 34” high

E. Mounting: Surface mount with embedded anchors. Stainless steel anchors and tamper-resistant stainless steel screws are included.

F. Submit Manufacturer’s Shop Drawings and color palette for color & finish selection.

2.2 BASKETBALL HOOP & POLE

A. Backboard, goal, and net shall all be made by the same manufacturer.

B. Backboard shall be constructed with ½” thick, clear poly-carbonate, contain ½” perforated holes, and measure 72” x 42” (Rectangular). Backboard shall be framed with “E”-channeled extruded aluminum and attached with stainless steel hardware. Official sized white target shall be silk-screened on the face of the backboard. Goal mounting holes (4) to be standard 5” (horizontal) by 4” (vertical) mounting centers.

C. Goal shall be a front mount 18” single ring goal (5/8”), nylon net, with a powder coated finish.

D. Pole shall be a Gooseneck Pole system, 5½” O.D. Schedule 40 steel pipe, with 6- layer galvanized finish.

E. Contractor shall touch up any scratches or other marks to surfaces and finishes after installation with products as approved by the manufacturer.

2.3 STONEDUST PAVING

A. Stone

1. Stone for paving to be decomposed granite 3/8" or 1/4" crushed aggregate screenings. Sand and crushed stone shall consist of inert materials that are hard and durable, with stone free from surface coatings and deleterious materials. Gradation requirements shall be as follows:Crushed Stone Sieve Analysis Percentage of Weight Passing a Square Mesh Sieve AASHTO T11-82 and T2782.

<u>1/4" MINUS AGGREGATE GRADATION</u>

US Sieve No.	Percent Passing by Weight
#3/8"	100
#4	90-100
#8	75-80
#16	55-65
#30	40-50

#50	25-35
#100	15-20
#200	10-15

2. Color to be determined by Landscape Architect. Submit sample(s) as requested.

3. Stabilizer Binder

a. Binder to be: Stabilizer for Stabilized Aggregate surfaces.

b. Binder shall be a non-toxic, organic, colorless and odorless concentrated powder that binds decomposed granite or crushed 3/8" or ¼" minus aggregate. Product to have 64% pre-consumer recycled content. Producer shall have 25 years experience at same formulation.

2.4 STEEL EDGING

A. Steel edging shall be a commercial grade steel edging, 1/4” x 5”, fabricated in 10′ sections with anchor stake loops stamped in face of section. There shall be a minimum of 4 anchor stake loops per each 10' section.

B. Use 16” (as noted on Drawings) tapered steel anchoring stakes (10 ga.) provided by manufacturer. 16” long stakes need to be ordered specifically.

C. Edging shall be Hot Rolled Low Carbon Steel conforming to ASTM-A-36, ASTM-A-283, and ASTM-A-569. Edging shall have a hot dipped galvanized finish.

2.5 PEASTONE DRIP EDGE

A. Peastone shall be 3/8” nom. rounded stone.

B. Color to be brown/tan. Sample to be approved by Landscape Architect prior to installation.

C. Steel edging to be as per 2.5 above, set flush with grade.

PART 3 - EXECUTION

3.1 BIKE RACKS

A. Install as shown in Drawings and per Manufacturer's instructions. Contractor to touch up any scratches and all mars to surfaces or finishes.

3.2 BASKETBALL POSTS, BACKBOARDS, RIMS, AND NETS

A. To be installed per drawings and per manufacturer’s specifications, with appropriate clearances, and in accordance with standard practices for Basketball Court construction and City of Framingham standards.

3.3 STABILIZED STONE DUST

A. Preparation:

1. Base shall be 6” dense graded gravel.

2. Pre-soak base material with water and compact to 95% determined by test method ASTM D 1557 prior to installing Stabilized Aggregate. Compaction testing to be provided by contractor, one test per 2,000 square feet.

B. Blending Stabilizer

1. Stabilizer shall be thoroughly pre-mixed with aggregate at the rate of 15 lbs of Stabilizer per 1 ton of aggregate. Verify with manufacturer correct Stabilizer rate for your project and climate. Drop spreading of Stabilizer over pre-placed aggregate or mixing by rototilling is not acceptable. Stabilizer shall be mechanically pre-mixed per manufacturer's recommendations using an approved mechanical blending unit to adequately blend Stabilizer with aggregate (Bucket blending is not an approved blending apparatus). Always blend Stabilizer and aggregate DRY.

C. Placement

1. After pre-blending, place stabilized aggregate directly on prepared sub-grade. Level to desired grade and cross section. Depth of pathways shall be 3" for heavy foot traffic and light vehicles. DO NOT place on filter fabric. Contact Supplier. for installation on slopes greater than 8%.

D. Watering

1. Water heavily for full-depth moisture penetration of profile. Water activates Stabilizer. Apply 25 to 45-gallons of water per 1-ton to achieve saturation. Randomly test for depth using a probing device, which reaches full depth.
2. Contractor shall wait a minimum of 6 – 72 hours or until such time that the Stabilized Aggregate is able to accept compaction from a 1 to 5 ton roller without separation.
3. If surface aggregate dries significantly quicker than subsurface material, lightly mist surface before compaction.

E. Compaction

1. Compact Stabilized Aggregate to 85% relative compaction by equipment such as; a 2 to 5-ton double drum roller making 3 to 4 passes. Do not begin compaction for 6 hours after placement and up to 72 hours. DO NOT use a vibratory plate compactor or vibration feature on roller, as vibration separates large aggregate particles. If pumping or pancaking of surface occurs, surface is still too wet to roll.
2. Take care in compacting surface when adjacent to planting and irrigation systems, use 8" or 10" hand tamp. Installation of Stabilized Aggregate more than 3" thick shall be installed in lifts. If 4" thick compacted (2) 2" lifts. If 5" thick compacted (2) 2.5" lifts. If Stabilized Aggregate is pre-moistened before installation entire 4" or 5" lift may be installed.
3. Lightly spray surface area following compaction. Do not disturb aggregate surface with spray action.

F. Inspection

1. Finished surface shall be smooth, uniform and solid with no evidence of chipping or cracking. Cured and compacted pathway shall be firm throughout profile with no spongy areas. Loose material shall not be present on surface after installation, but may appear after use and according to environmental conditions. Pathway shall remain stable underneath loose granite on top with a “natural” look. Any significant irregularities in path surface shall be repaired to the uniformity of entire installation.

G. Protection

1. Contractor shall furnish and install construction fence around new surface to prevent public access. Fencing shall be maintained in place for a minimum of 12 - 72 hours after completion of installation, or as directed by the Owner’ Representative. Drying period may take longer due to weather conditions.

2. Contractor shall notify Owner’s Representative that landscape irrigation shall be restricted near Stabilized Aggregate surface until drying period is complete. Standing water on surface and adjacent to path shall be restricted at all times.

H. Maintenance

1. Remove debris, such as paper, grass clippings, or organic material by mechanically blowing or hand raking as needed. When plowing snow, use rubber baffle on plow blade or wheels on plow to lift blade 1/4" off the surface.

2. During first year, minor amounts of loose aggregate may appear on surface (1/16 to 1/4"). If material exceeds a ¼”, redistribute over entire surface. Water to 1” depth and compact with power roller of no less than 1000-lbs. Repeat as needed. If cracking occurs, sweep fines into cracks, water thoroughly and hand tamp with an 8” – 10” hand tamp.

I. Repairs

1. Excavate damaged area to the depth of the Stabilized Aggregate and square off sidewalls.

2. If area is dry, moisten damaged portion lightly.

3. Pre-blend the dry required amount of Stabilizer with the proper amount of aggregate in a concrete mixer.

4. Add water to the pre-blended Stabilized Aggregate. Thoroughly moisten mix with 25 to 45 gallons per 1-ton of pre-blended material or to approximately 10% moisture content.

5. Apply moistened pre-blended Stabilized Aggregate to excavated area to finish grade.

6. Compact with an 8” to 10” hand tamp or 250 to 300 pound roller. Keep traffic off areas for 12 to 48 hours after repair has been completed.

3.4 STEEL EDGING

A. Install steel edging straight and true and according to manufacturer's instructions.

B. Ensure that all stakes are firmly seated.

C. Ease all field-cut edges to avoid sharp corners and laceration hazards; all cut ends shall be sealed with a rust-inhibiting primer and painted to match adjacent finish.

3.5 PEASTONE DRIP EDGE

A. Install Peastone as shown on the drawings and tamp evenly into place.

B. Steel edge to be installed according to manufacturer's instructions. Ensure all lines are straight and true.

3.6 CLEANING

A. Waste disposal: Comply with all regulations regarding handling, storage, and disposal of all hazardous materials and waste. Consult local agencies or disposal companies for individual instructions and requirements. Improper disposal of paint and their related materials is illegal and may result in large fines. Please comply with all regulations and minimize waste whenever possible.

B. Perform cleaning during installation and upon completion of paving work. Remove from site all excess materials, debris, and equipment.

3.7 STANDARDS AND COMPLETION

A. Upon completion, the contractor(s) shall remove and properly dispose of all construction debris, surplus materials, and empty containers, and leave the site in a condition acceptable to the Owner.

END OF SECTION

SECTION 32 12 16

ASPHALT PAVING

PART 1 - GENERAL

1.1 GENERAL PROVISIONS

A. Attention is directed to the CONTRACT AND GENERAL CONDITIONS and all Sections within DIVISION 01 - GENERAL REQUIREMENTS which are hereby made a part of this Section of the Specifications.

1.2 DESCRIPTION OF WORK

A. Work Included: Provide labor, materials and equipment necessary to complete the work of this Section, including but not limited to the following:

1. Hot-mix asphalt paving, including walkways, ramps and curbs.
2. Hot-mix asphalt patching.
3. Pavement-marking paint.

B. Alternates: Not Applicable.

C. Items To Be Installed Only: Not Applicable.

D. Items To Be Furnished Only: Not Applicable.

E. Related Work: The following items are not included in this Section and will be performed under the designated Sections:

1. Section 310000 - EARTH MOVING for aggregate subbase and base courses and for aggregate pavement shoulders.

1.3 SUBMITTALS

A. Product Data: For each type of product indicated. Include technical data and tested physical and performance properties.

1. Job-Mix Designs: Certification, by authorities having jurisdiction, of approval of each job mix proposed for the Work.

B. Shop Drawings: Indicate pavement markings, lane separations, and defined parking spaces. Indicate, with international symbol of accessibility, spaces allocated for people with disabilities.

C. Material Certificates: For each paving material, from manufacturer.

1.4 QUALITY ASSURANCE

A. Manufacturer Qualifications: A paving-mix manufacturer registered with and approved by the Massachusetts Highway Department (MHD).

B. Regulatory Requirements: Comply with materials, workmanship, and other applicable requirements of the Massachusetts Highway Department (MHD) for hot mix asphalt paving work.

1. Comply with requirements of the Massachusetts Highway Department (MHD) Standard Specifications for Highways and Bridges, including supplemental specifications and special provisions.
2. Comply with requirements of the Americans with Disabilities Act (ADA) and the Massachusetts Architectural Access Board (MAAB). If these requirements cannot be met with the grades and slopes indicated on the plans, notify the Designer immediately.
3. Comply with requirements of the local authority having jurisdiction concerning the location and construction of accessible curb cuts.

C. Preinstallation Conference: Conduct conference at Project site to comply with requirements in Division 01.

1. Review methods and procedures related to hot-mix asphalt paving including, but not limited to, the following:

a. Review proposed sources of paving materials, including capabilities and location of plant that will manufacture hot-mix asphalt.
b. Review condition of subgrade and preparatory work.
c. Review requirements for protecting paving work, including restriction of traffic during installation period and for remainder of construction period.
d. Review and finalize construction schedule and verify availability of materials, Installer's personnel, equipment, and facilities needed to make progress and avoid delays.

1.5 DELIVERY, STORAGE, AND HANDLING

A. Deliver pavement-marking materials to Project site in original packages with seals unbroken and bearing manufacturer's labels containing brand name and type of material, date of manufacture, and directions for storage.

B. Store pavement-marking materials in a clean, dry, protected location within temperature range required by manufacturer. Protect stored materials from direct sunlight.

1.6 PROJECT CONDITIONS

A. Traffic Control: Maintain access for vehicular and pedestrian traffic as required for other construction activities.

B. Environmental Limitations: Do not apply asphalt materials if subgrade is wet or excessively damp, if rain is imminent or expected before time required for adequate cure, or if the following conditions are not met:

1. Tack Coat: Minimum surface temperature of 60 deg F.
2. Asphalt Base Course: Minimum surface temperature of 40 deg F and rising at time of placement.
3. Asphalt Surface Course: Minimum surface temperature of 60 deg F at time of placement.

C. Pavement-Marking Paint: Proceed with pavement marking only on clean, dry surfaces and at a minimum ambient or surface temperature of 55 deg F for water-based materials, and not exceeding 95 deg F.

PART 2 - PRODUCTS

2.1 AGGREGATES

A. Coarse Aggregate: ASTM D 692, sound; angular crushed stone, crushed gravel, or cured, crushed blast-furnace slag.

B. Fine Aggregate: ASTM D 1073 or AASHTO M 29, sharp-edged natural sand or sand prepared from stone, gravel, cured blast-furnace slag, or combinations thereof.

C. Mineral Filler: ASTM D 242 or AASHTO M 17, rock or slag dust, hydraulic cement, or other inert material.

D. Reclaimed Asphalt Pavement (RAP): Provide material obtained from the highways or streets by crushing, milling, or planing existing hot mix asphalt pavements.

1. The proportion of RAP to virgin aggregate for base course mixtures and intermediate course mixtures shall be limited to a maximum of 40% for drum mix plants and 20% for modified batch plants. The maximum amount of RAP for surface course mixtures shall be 10%.

2.2 ASPHALT MATERIALS

A. Asphalt Binder, Performance Graded: AASHTO M320 or AASHTO MP 1a, performance grade as required by MHD Specifications.

B. Tack Coat: AASHTO M 140 emulsified asphalt, or AASHTO M 208 cationic emulsified asphalt, slow setting, diluted in water, of suitable grade and consistency for application.

2.3 AUXILIARY MATERIALS

A. Herbicide: Commercial chemical for weed control, registered by the EPA. Provide in granular, liquid, or wettable powder form.

B. Pavement-Marking Paint: Acrylic/latex type, low VOC, traffic marking paint.

1. Color: As indicated.

C. Wheel Stops: Precast, air-entrained concrete, 2500-psi minimum compressive strength, 4-1/2 inches high by 9 inches wide by 72 inches long. Provide chamfered corners, drainage slots on underside, and holes for anchoring to substrate.

1. Dowels: Galvanized steel, 3/4-inch diameter, 10-inch minimum length.

2.4 ASPHALT MIXES

A. Hot-Mix Asphalt: Dense, hot-laid, hot-mix asphalt plant mixes approved by MHD Specifications and designed according to procedures in AI MS-2, "Mix Design Methods for Asphalt Concrete and Other Hot-Mix Types".

PART 3 - EXECUTION

3.1 EXAMINATION

A. Examine exposed subgrades and subbase surfaces for compliance with requirements for dimensional, grading, and elevation tolerances.

B. Proof-roll subgrade below pavements with heavy pneumatic-tired equipment to identify soft pockets and areas of excess yielding. Do not proof-roll wet or saturated subgrades.

C. Proceed with paving only after unsatisfactory conditions have been corrected.

3.2 COLD MILLING

A. Clean existing pavement surface of loose and deleterious material immediately before cold milling. Remove existing asphalt pavement by cold milling to grades and cross sections indicated.

3.3 PATCHING

A. Existing Hot-Mix Asphalt Pavement: Saw cut perimeter of patch and excavate existing pavement section to sound base. Excavate rectangular or trapezoidal patches, extending 12 inches into adjacent sound pavement, unless otherwise indicated. Cut excavation faces vertically. Remove excavated material. Recompact existing unbound-aggregate base course to form new subgrade.

B. Existing Portland Cement Concrete Pavement: Break cracked slabs and roll as required to reseat concrete pieces firmly.

1. Remove disintegrated or badly cracked pavement. Excavate rectangular or trapezoidal patches, extending into adjacent sound pavement, unless otherwise indicated. Cut excavation faces vertically. Recompact existing unbound-aggregate base course to form new subgrade.

C. Tack Coat: Apply uniformly to vertical surfaces abutting or projecting into new, hot-mix asphalt paving at a minimum rate of 0.05 to 0.15 gal./sq. yd..

1. Allow tack coat to cure undisturbed before applying hot-mix asphalt paving.
2. Avoid smearing or staining adjoining surfaces, appurtenances, and surroundings. Remove spillages and clean affected surfaces.

D. Patching: Fill excavated pavements with hot-mix asphalt base mix for full thickness of patch and, while still hot, compact flush with adjacent surface.

3.4 SURFACE PREPARATION

A. General: Immediately before placing asphalt materials, remove loose and deleterious material from substrate surfaces. Ensure that prepared subgrade is ready to receive paving.

B. Herbicide Treatment: Apply herbicide according to manufacturer's recommended rates and written application instructions. Apply to dry, prepared subgrade or surface of compacted-aggregate base before applying paving materials.

C. Tack Coat: Apply uniformly to surfaces of existing pavement at a rate of 0.05 to 0.15 gal./sq. yd..

1. Allow tack coat to cure undisturbed before applying hot-mix asphalt paving.
2. Avoid smearing or staining adjoining surfaces, appurtenances, and surroundings. Remove spillages and clean affected surfaces.

3.5 HOT-MIX ASPHALT PLACING

A. Machine place hot-mix asphalt on prepared surface, spread uniformly, and strike off. Place asphalt mix by hand to areas inaccessible to equipment in a manner that prevents segregation of mix. Place each course to required grade, cross section, and thickness when compacted.

1. Spread mix at minimum temperature of 250 deg F.
2. Regulate paver machine speed to obtain smooth, continuous surface free of pulls and tears in asphalt-paving mat.

B. Place paving in consecutive strips not less than 10 feet wide unless infill edge strips of a lesser width are required.

C. Promptly correct surface irregularities in paving course behind paver. Use suitable hand tools to remove excess material forming high spots. Fill depressions with hot-mix asphalt to prevent segregation of mix; use suitable hand tools to smooth surface.

3.6 JOINTS

A. Construct joints to ensure a continuous bond between adjoining paving sections. Construct joints free of depressions, with same texture and smoothness as other sections of hot-mix asphalt course.

1. Clean contact surfaces and apply tack coat to joints.
2. Offset longitudinal joints, in successive courses, a minimum of 6 inches.
3. Offset transverse joints, in successive courses, a minimum of 24 inches.
4. Construct transverse joints at each point where paver ends a day's work and resumes work at a subsequent time. Construct these joints using either "bulkhead" or "papered" method according to AI MS-22, for both "Ending a Lane" and "Resumption of Paving Operations."

3.7 COMPACTION

A. General: Begin compaction as soon as placed hot-mix paving will bear roller weight without excessive displacement. Compact hot-mix paving with hot, hand tampers or with vibratory-plate compactors in areas inaccessible to rollers.

1. Complete compaction before mix temperature cools to 185 deg F.

B. Breakdown Rolling: Complete breakdown or initial rolling immediately after rolling joints and outside edge. Examine surface immediately after breakdown rolling for indicated crown, grade, and smoothness. Correct laydown and rolling operations to comply with requirements.

C. Intermediate Rolling: Begin intermediate rolling immediately after breakdown rolling while hot-mix asphalt is still hot enough to achieve specified density. Continue rolling until hot-mix asphalt course has been uniformly compacted to the following density:

1. Average Density: ASTM D 2041, per MHD Specifications.

D. Finish Rolling: Finish roll paved surfaces to remove roller marks while hot-mix asphalt is still warm.

E. Edge Shaping: While surface is being compacted and finished, trim edges of pavement to proper alignment. Bevel edges while asphalt is still hot; compact thoroughly.

F. Protection: After final rolling, do not permit vehicular traffic on pavement until it has cooled and hardened.

G. Erect barricades to protect paving from traffic until mixture has cooled enough not to become marked.

3.8 ASPHALT CURBS

A. Construct hot-mix asphalt curbs over compacted pavement surfaces. Apply a light tack coat unless pavement surface is still tacky and free from dust. Spread mix at minimum temperature of 250 deg F.

1. Asphalt Mix: Same as pavement surface-course mix.

B. Place hot-mix asphalt to curb cross section indicated or, if not indicated, to local standard shapes, by machine or by hand in wood or metal forms. Tamp hand-placed materials and screed to smooth finish. Remove forms after hot-mix asphalt has cooled.

3.9 INSTALLATION TOLERANCES

A. Accessibility: Comply with requirements of Massachusetts Architectural Access Board and ADAAG requirements. Remove and replace paving that does not meet required tolerances, when measured with a 2 foot straightedge.

B. Pavement Thickness: Compact each course to produce the thickness indicated within the following tolerances:

1. Base Course: Plus or minus 1/2 inch.
2. Surface Course: Plus 1/4 inch, no minus.

C. Pavement Surface Smoothness: Compact each course to produce a surface smoothness within MHD Specification tolerances as determined by using a 10-foot straightedge applied transversely or longitudinally to paved areas.

3.10 PAVEMENT MARKING

A. Do not apply pavement-marking paint until layout, colors, and placement have been verified with Designer.

B. Allow paving to age for a minimum of 30 days before starting pavement marking.

C. Sweep and clean surface to eliminate loose material and dust.

D. Apply paint with mechanical equipment to produce pavement markings, of dimensions indicated, with uniform, straight edges. Apply at manufacturer's recommended rates to provide a minimum wet film thickness of 15 mils.

3.11 WHEEL STOPS

A. Securely attach wheel stops to pavement with not less than two galvanized-steel dowels embedded at one-quarter to one-third points. Securely install dowels into pavement and bond to wheel stop. Recess head of dowel beneath top of wheel stop.

3.12 FIELD QUALITY CONTROL

A. Independent Testing Agency: Cooperate with the Independent Testing Agency engaged by City of Framingham for field quality control activities for the Work of this Section. Refer also to Section 014325 - TESTING AGENCY SERVICES.

B. Test the plane of the finished surfaces of base, binder, and surface courses with a 16-foot straightedge, except use a 10-foot straightedge on vertical courses and on the top course of resurfaced streets which contain manhole covers, valve boxes, and the like.

C. Carefully apply the straightedge immediately after the first compaction by rolling, and from then on as may be necessary until and after the final compaction of the material in place. Hold the straightedge in successive positions parallel to the road centerline and in contact with the road surface; check the entire area from one side of the pavement to the other.

D. Correct irregularities which vary 3/8 inch from a true finished surface in base and binder courses, and 1/4 inch in top courses.

E. Irregularities which may develop before the completion of rolling and while the material is still workable, may be remedied by loosening the surface mixture and removing or adding material as necessary. Should any unsatisfactory irregularities or defects remain after final compaction, correct the defective work by removing and replacing with new material to form a true and even surface.

3.13 OPENING TO TRAFFIC

A. No vehicular traffic or loads shall be permitted on the newly completed pavement until adequate stability has been attained, and the material has cooled sufficiently to prevent distortion or loss of fines, and the pavement has achieved a maximum temperature of 140 degrees F.

B. If the climatic or other conditions warrant it, the period of time before opening to traffic may be extended at the discretion of the Architect.

3.14 DISPOSAL

A. Except for material indicated to be recycled, remove excavated materials from Project site and legally dispose of them in an EPA-approved landfill.

END OF SECTION

SECTION 32 16 14

PRECAST CONCRETE CURBS

PART 1 GENERAL

1.01 RELATED WORK SPECIFIED ELSEWHERE

A. Earthwork: Section 31 00 00.

1.02 SUBMITTALS

A. Product Data: Catalog sheets, specifications, and installation instructions for precast curbs.

B. Quality Control Submittals:
   1. Test Reports: Random freeze thaw tests shall be conducted by the manufacturer. Test specimens shall retain 60 percent of its initial modulus of elasticity after 300 cycles. Test results shall be made available to the Director upon request.

PART 2 PRODUCTS

2.01 MATERIALS

A. Provide precast concrete curbs with a minimum compression strength of 5000 pounds per square inch. Castings shall have plane smooth surfaces, true to line and face, free from defects, sharp arises, and with curved surfaces accurately reproduced. Overall dimensions for each casting shall not vary more than 1/16 inch from those indicated.

B. Curb units shall be cast at the manufacturers plant. Job site castings will not be permitted.

C. Curbing to be set on a radius of 100 feet or less shall be cast to the curve required. Ends shall be formed or sawed on radial lines.

D. Curb Foundation: One part Portland cement to six parts No. 1A coarse aggregate dry mix.

PART 3 EXECUTION

3.01 INSTALLATION

A. Set curb true to line and grade on a foundation of one cubic foot of dry concrete for each linear foot of curb installed. Ram all spaces under the curb so that it is completely supported throughout the entire length.

B. Butt joint curb sections together.

C. Install joint sealer where curb abuts existing walls, posts, buildings, and fixed structures or appurtenances.

3.02 RESETTING EXISTING CURBS

A. Remove mortar and concrete from existing curbs to be reused. Replace units damaged by the contractor's negligence.

B. Reset existing curbs approved for reuse by the City of, Framingham.

3.03 FIELD QUALITY CONTROL

A. The City of Framingham may conduct additional tests at their discretion. Replace curb units taken for testing, not to exceed 10 linear feet for each 1000 feet or fraction thereof delivered to the project.

END OF SECTION

SECTION 32 16 40

GRANITE CURB

PART 1 - GENERAL

1.1 GENERAL PROVISIONS

A. Attention is directed to the CONTRACT AND GENERAL CONDITIONS and all Sections within DIVISION 01 - GENERAL REQUIREMENTS which are hereby made a part of this Section of the Specifications.

1.2 WORK INCLUDED

A. The work includes furnishing all labor, materials, equipment, and supervision to construct the various types of granite curbing, in accordance with the Drawings and Specifications.

1.3 RELATED WORK

A. Examine Contract Documents for requirements that affect work of this Section. Other Specification Sections that directly relate to work of this Section include, but are not limited to:

1. Section 014000 - QUALITY REQUIREMENTS; Inspection and testing.
2. Provision of waste management: Section 017419 - Construction Recycling Waste Management Plan.
3. Section 033000 - CAST-IN-PLACE CONCRETE; Concrete curb; concrete for base.
4. Section 310000 - EARTH MOVING; Establishment of subgrade elevations and courses.
5. Section 321216 - ASPHALT PAVING.

1.4 REFERENCES

A. Comply with applicable requirements of the following standards. Where these standards conflict with other specified requirements, the most restrictive requirements shall govern.

1. American Society for Testing and Materials (ASTM):

   a. ASTM C 131 Resistance to Degradation of Small-Size Coarse Aggregate by Abrasion and Impact in the Los Angeles Machine
   b. ASTM C 615 Structural Granite

2. Commonwealth of Massachusetts Highway Department (MHD): Specifications Standard Specifications for Highway and Bridges

1.5 SUBMITTALS

A. Submit complete shop drawings of each curb type and size for Architect's approval.

1.6 SAMPLE SECTION

A. A sample curb section, full dimension, 6 feet long minimum, shall be fabricated prior to start of granite curbing. The work will be inspected by the Architect. If the original sample is not acceptable, the Contractor shall construct additional sample sections until an accepted sample is obtained. The accepted sections shall become the standard for the entire job, and shall remain undisturbed until completion of all granite curbing.

1.7 QUALITY ASSURANCE

A. Unless otherwise indicated, granite curb materials and construction shall conform to the applicable portions of the following:

1. MHD Specifications Section 500, "Curb and Edging."

1.8 DELIVERY, STORAGE, AND HANDLING

A. Granite curb units shall be delivered to the job adequately protected from damage during transit.

B. Curb shall be protected against staining, chipping, and other damage. Cracked, badly chipped, or stained units will be rejected and shall not be employed in the work.

PART 2 - PRODUCTS

2.1 BASE COURSE

A. Material for base course shall be Dense Graded Crushed Stone, as specified in Section 310000 - EARTH MOVING.

2.2 GRANITE CURB

A. Granite curb required to complete the work of this Section shall be a structural granite conforming to ASTM C 615, Class I Engineering Grade, suitable for curbstone use.

1. Curb shall be light grey, free from seams which impair structural integrity, and with percentage of wear less than 32%, as determined by ASTM C 131.

B. Curb materials shall conform to MHD Specifications Section M9.04.0 and shall meet requirements specified in the subsection of Division III, Materials of the MHD Specifications:

1. Item:

a. Vertical Granite Curb.
b. Transitional Granite Curb.
c. Flush Granite Curb.

C. Provide sawn vertical faces on both sides for all curb sizes. Provide thermal finish on exposed pavement/paver side only.

2.3 CEMENT MORTAR

A. Mortar for pointing joints between curbstones shall be a cement mortar composed of one part Portland cement and two parts sand, by volume with sufficient water to form a workable, stiff mixture.

2.4 CONCRETE

A. Concrete for foundation at joints shall conform to Section 033000 - CAST-IN-PLACE CONCRETE.

PART 3 - EXECUTION

3.1 GRADING

A. Areas to receive granite curb will be compacted and brought approximately to subgrade elevation under Section 310000 - EARTH MOVING before work of this section is performed. Final fine grading, filling, and compaction of subgrade to receive curbing to form a firm, uniform, accurate, and unyielding subgrade at required elevations and to required lines, shall be done under this Section.

B. Existing subgrade material which will not readily compact shall be removed and replaced with satisfactory materials. Additional materials needed to bring subgrade to required line and grade and to replace unsuitable material removed shall be material conforming to Section 310000 - EARTH MOVING.

C. Subgrade of areas to receive curbing shall be recompacted to bring top 8 inch of material immediately below gravel base course to a compaction of at least 90% of maximum density, as determined by ASTM D 1557, Method D. Subgrade compaction shall extend for a distance of at least 1 ft. beyond curb edge.

D. Excavation required in subgrade shall be completed before fine grading and final compaction of subgrade are performed. Where excavation must be performed in completed subgrade or subbase subsequent backfill and compaction shall be performed as specified in Section 310000 - EARTH MOVING. Completed subgrade after filling such areas shall be uniformly and properly graded.

E. Areas being graded or compacted shall be kept shaped and drained during construction. Ruts greater than or equal to 2 inch deep in subgrade, shall be graded out, reshaped and recompacted before placing granite curb.

F. Materials shall not be stored or stockpiled on subgrade.

G. Disposal of debris and other material excavated and/or stripped under this section, and material unsuitable for or in excess of requirements for completing work of this Section shall be legally disposed of off-site.

H. Prepared subgrade will be inspected by the Architect. Subgrade shall be approved by the Architect before installation of aggregate base course. Disturbance to subgrade caused by inspection procedures shall be repaired under this Section of the specification.

3.2 AGGREGATE BASE COURSE

A. Aggregate base course for paving and the spreading, grading, and compaction methods employed shall conform to Section 310000 - EARTH MOVING.

B. Subgrade and base course shall be kept clean and uncontaminated. Less select materials shall not be permitted to become mixed with gravel. Materials spilled outside pavement lines shall be removed and area repaired.

C. Portions of subgrade or of construction above which become contaminated, softened, or dislodged by passing of traffic, or otherwise damaged, shall be cleaned, replaced, and otherwise repaired to conform to the requirements of Section 310000 - EARTH MOVING before proceeding with next operation.

3.3 SETTING CURB

A. Curb shall be set in aggregate base with continuous concrete haunch foundation, with trench bottom at minimum 6 inch below bottom of curb. Excavation shall be filled to required level with base course material as specified above.

B. Vertical face of vertical curb shall be plumb, with curb top parallel to adjacent surface.

C. Curb shall be set accurately to line and grade in continuous haunch. Curb units shall be fitted together as closely as possible. Curb shall not be field cut.

D. Joints, between curb units shall be carefully filled with a cement mortar, and neatly pointed on the top and front exposed portions. After pointing, excess mortar shall be cleaned from curb surface.

E. Backfill material on each side of curb shall be as specified for adjacent surface and shall be thoroughly compacted by means of power tampers. Extreme care shall be taken not to destroy alignment. Curb sections disturbed during backfilling or otherwise shall be reset to line and grade, and properly backfilled.

END OF SECTION

SECTION 32 17 23

PAVEMENT MARKING

PART 1 - GENERAL

1.01 RELATED DOCUMENTS

A. Drawings and general provisions of the Contract, including General and Supplementary Conditions and Division 1 Specification Sections, apply to this Section.

1.02 WORK INCLUDED

A. Provide all equipment and materials, and do all work necessary for pavement marking, including crosswalks and lines, handicap striping, and parking lot striping, as indicated on the Drawings and as specified.

1.03 RELATED WORK

A. Examine Contract Documents for requirements that affect work of this Section. Other Specification Sections that directly relate to work of this Section include, but are not limited to:

1. Section 014500, QUALITY REQUIREMENTS; Inspection and testing.
2. Section 321216, ASPHALT PAVING; Asphaltic concrete paving, including asphaltic concrete base for concrete pavers.

1.04 REFERENCES

A. Comply with applicable requirements of the following standards. Where these standards conflict with other specified requirements, the most restrictive requirements shall govern.

1. Federal Specifications (Fed. Spec.):

   TT-P-115E Paint, Traffic, Highway, White, and Yellow

2. Commonwealth of Massachusetts Highway Department (MHD):

   Specifications Standard Specifications for Highways and Bridges.

3. Rules and Specification, For Excavation Activity Within the City of Boston, City of Boston Public Works Department.

1.05 LAYOUT OF WORK

A. The Contractor shall furnish to the Architect for approval a schedule of pavement marking operations in accordance with MHD Specifications Section 860.

1.06 SUBMITTALS

A. Lists of proposed equipment, including descriptive data, and notifications of proposed Contractor actions as specified in this section. List of removal equipment shall include descriptive data indicating area of coverage per pass, pressure adjustment range, tank and flow capacities, and safety precautions required for the equipment operation.

1.07 DELIVERY AND STORAGE

A. All materials shall be delivered and stored in sealed containers that plainly show the designated name, formula or specification number, batch number, color, date of manufacture, manufacturer's name, and directions, all of which shall be plainly legible at time of use.

1.08 EQUIPMENT

A. All machines, tools and equipment used in the performance of the work shall be approved and maintained in satisfactory operating condition. Equipment operating on roads and runways shall display low speed traffic markings and traffic warning lights.

1.09 TRAFFIC CONTROL

A. Traffic Controls: NOTE: Guidance for traffic control procedures can be obtained from the Manual on Uniform Traffic Control Devices (MUTCD) for Streets and Highways.

B. Place traffic cones along newly painted lines to control traffic and prevent damage to newly painted surfaces. Remove when paint has dried fully.

1.10 WEATHER LIMITATIONS

A. Pavement surface shall be free of snow, ice, or slush. Surface temperature shall be at least 40 degrees F and rising at the beginning of operations, except those involving shot or sand blasting. Operation shall cease during thunderstorms. Operation shall cease during rainfall, except for water blasting and removal of previously applied chemicals. Water blasting shall cease where surface water accumulation alters the effectiveness of material removal.

PART 2 - PRODUCTS

2.01 MATERIALS

A. Pavement Markings shall conform to the BTD’s Rules and Specifications. All thermoplastic pavement markings furnished and applied by shall be in accordance with the Massachusetts Department of Public Works Specifications dated 1988, sections 860 and M7, sub section X7.01. 20 or latest revisions thereof. The raw materials used must be thoroughly melted, blended and mixed in the manufacturing process before delivery.

B. Paint and reflective media shall be in sealed containers that plainly show the designated name, formula or specification number, batch number, color, date of

manufacture, manufacturer's name, formulation number and directions, all of which shall be plainly legible at time of use.

2.03 PAINT MATERIAL

A. The paint shall be homogeneous, easily stirred to smooth consistency, and shall show no hard settlement or other objectionable characteristics during a storage period of 6 months, color as indicated. Pavement marking paints shall comply with applicable state and local laws enacted to ensure compliance with Federal Clean Air Standards. Paint materials shall conform to the restrictions of the local Air Pollution Control District.

2.06 APPLICATION EQUIPMENT

A. Application Equipment for Marking Materials

1. Application equipment shall provide continuous mixing and agitation of the material. Conveying parts of the equipment between the main material reservoir and the extrusion shoe or spray gun shall prevent accumulation and clogging. All parts of the equipment which come into contact with the material shall be easily accessible and exposable for cleaning and maintenance. All mixing and conveying parts up to and including the extrusion shoes and spray guns shall maintain the material at the required temperature with heat-transfer oil or electrical-element-controlled heat.

2. The application equipment shall be constructed to ensure continuous uniformity in the dimensions of the stripe. The applicator shall provide a means for cleanly cutting off stripe ends squarely and shall provide a method of applying "skip lines". The equipment shall be capable of applying varying widths of traffic markings.

B. Mobile and Maneuverable: Application equipment shall be mobile and maneuverable to the extent that straight lines can be followed, and normal curves can be made in a true arc. The equipment used for the placement of pavement markings shall be of two general types:

1. Mobile Application Equipment: The mobile applicator shall be defined as a truck mounted, self-contained pavement marking machine that is capable of applying paint markings. The unit shall be equipped to apply the marking material at widths varying from 3 to 12 inches, and in varying thicknesses. The mobile unit shall be capable of operating continuously and of installing a minimum of 20,000 lineal feet of longitudinal markings in an 8-hour day.

a. The mobile unit shall be equipped with an electronic programmable line pattern control system. The control system shall be capable of applying skip or solid lines in any sequence, through any and all of the extrusion shoes, or the spray guns, and in programmable cycle lengths. In addition, the mobile unit shall be equipped with an automatic counting mechanism capable of recording the number of lineal feet of markings applied to the pavement surface with an accuracy of 0.5 percent.

2. Portable Application Equipment: The portable applicator shall be defined as hand operated equipment, specifically designed for placing special markings such as crosswalks, stop bars, legends, arrows, and short lengths of lane, edge and centerlines. The portable applicator shall be equipped with all the necessary components so as to be capable of extruding a line of 3 to 12 inches in width, and in varying thicknesses and of generally uniform cross section.

2.07 SURFACE PREPARATION EQUIPMENT

A. Sandblasting Equipment: shall include an air compressor, hoses, and nozzles of proper size and capacity for cleaning surfaces to be painted. The compressor shall be capable of furnishing not less than 150 cfm of air at a pressure of not less than 90 psi at each nozzle used, and shall be equipped with traps that will maintain the compressed air free of oil and water.

B. Water blast Equipment: The water pressure shall be specified at 2600 psi at 140 degrees F in order to adequately clean the surfaces to be marked.

C. Marking Removal Equipment: shall be mounted on rubber tires and shall be capable of removing markings from the pavement without damaging the pavement surface or joint sealant. Water blasting equipment shall be capable of producing an adjustable, pressurized stream of water. Sandblasting equipment shall include an air compressor, hoses, and nozzles. The compressor shall be equipped with traps to maintain the air free of oil and water.

D. Shot blasting Equipment: shall be capable of producing an adjustable depth of removal of marking and pavement. Each unit shall be self-cleaning and self-contained, shall be able to confine dust and debris from the operation, and shall be capable of recycling the abrasive for reuse.

E. Chemical Equipment: shall be capable of application and removal of chemicals from the pavement surface and shall leave only non-toxic biodegradable residue.

2.08 REFLECTIVE MEDIA DISPENSER

A. The dispenser for applying the reflective media shall be attached to the paint dispenser and shall operate automatically and simultaneously with the applicator through the same control mechanism. The dispenser shall be capable of adjustment and designed to provide uniform flow of reflective media over the full length and width of the stripe at the rate of coverage specified in paragraph APPLICATION, at all operating speeds of the applicator to which it is attached.

PART 3 - EXECUTION

3.01 SURFACE PREPARATION

A. Surfaces to be marked shall be thoroughly cleaned before application of the pavement marking material. New pavement surfaces shall be allowed to cure for a period of not less than 48 hours before application of marking materials.

B. Dust, dirt, and other granular surface deposits shall be removed by sweeping, blowing with compressed air, rinsing with water, or a combination of these methods. Rubber deposits, surface laitance and other coatings adhering to the pavement shall be completely removed.

C. Where oil or grease are present on old pavements to be marked, affected areas shall be scrubbed with several applications of trisodium phosphate solution or other approved detergent or degreaser, and rinsed thoroughly after each application. After cleaning, oil-soaked areas shall be sealed with cut shellac to prevent bleeding through the new paint. Pavement surfaces shall be allowed to dry, when water is used for cleaning, prior to striping or marking. Surfaces shall be recleaned, when work has been stopped due to rain.

3.02 PRIMER

A. After surface preparation has been completed the asphalt and/or concrete pavement surface shall be primed. The primer shall be applied with spray equipment. Primer materials shall be allowed to "set-up" prior to applying the final paint composition. The asphalt concrete primer shall be allowed to dry to a tack-free condition, usually occurring in less than 10 minutes. The Portland cement concrete primer shall be allowed to dry in accordance with the manufacturer's recommendations. To shorten the curing time of the epoxy resins an infrared heating device may be used on the concrete primer.

3.03 APPLICATION OF MARKING MATERIALS

A. Marking materials shall be applied to clean, dry surfaces. Pavement marking materials shall be applied evenly to the pavement surface to be coated at a rate specified recommended by the paint manufacturer

B. Paint: Paint shall be applied with approved equipment. Paint shall be applied to clean, dry surfaces, and only when air and pavement temperatures are above 40 degrees F and less than 95 degrees F. Paint temperature shall be maintained within these same limits. New asphalt pavement surfaces and new Portland concrete cement shall be allowed to cure for a period of not less than 30 days before applications of paint. Paint shall be applied with approved equipment at rate of coverage specified. The Contractor shall provide guide lines and templates as necessary to control paint application. Special precautions shall be taken in marking numbers, letters, and symbols. Edges of markings shall be sharply outlined.

C. Guidelines and templates shall be employed as necessary to control paint application. Special precautions shall be taken in marking numbers, letters, and symbols. Edges of markings shall be sharply outlined.

D. Maximum drying time requirements of the paint manufacturer shall be enforced to prevent undue softening of bitumen, and pickup, displacement, or discoloration by vehicle tires.

E. If markings require more drying time than stated by the paint manufacturer, painting operations shall be discontinued until cause of the slow drying is determined and corrected.

3.03 PROTECTION OF MARKINGS

A. Markings shall remain protected until sufficiently dry to bear traffic.

END OF SECTION

Section 32 18 23
BASKETBALL COURT STRIPING

PART 1 - GENERAL

1.1 GENERAL REQUIREMENTS

A. The conditions and general requirements of the Contract, Division 0 and applicable parts of Division 1, apply to the work under this Section.

B. All references to products by manufacturer, trade name or performance Specifications bearing the connotation "or Approved Equal" shall be as determined by the Landscape Architect and the City, per MGL c. 30 s. 39M, part b, criteria 1.

C. Contractor shall comply with all laws, regulations, and quarantines for agricultural and horticultural products.

1.2 WORK INCLUDED

A. The work of this Section consists of the provision of all materials, labor, equipment and the like for the complete execution of all lawn establishment by sodding and related items as indicated on the Drawings and/or as specified herein.

B. Work includes but is not limited to the following:

1. Acrylic Resurfacer for Under Color-Coating;
2. Color-Coating & Court Striping on Basketball Court Pavement

1.3 REFERENCES

A. Examine all other sections of the Specifications and all Drawings for the relationship of the work under this Section and the work of other trades. Cooperate with all trades and all departments of the City of Framingham and coordinate all work under this Section.

B. The following related items are included under the Sections list below:

1. Section 02 41 17 – Building Demolition
2. Section 31 00 00 – Earth Moving
3. Section 31 20 00 – Earthwork
4. Section 32 12 16 – Asphalt Paving

1.4 DEFINITIONS

A. The following related items are included herin and shall mean:

1. S.S.H.B. - Standard Specifications for Highways and Bridges, the Commonwealth of Massachusetts, latest edition.
2. A.S.T.M. - American Society for Testing and Materials

3. A.A.S.H.T.O. - American Association of State Highway and Transportation Officials.

1.5 JOB CONDITIONS

A. Start of work under this Section shall constitute acceptance of the foundation conditions to which this work is applied. Any defects in for resulting from such conditions shall be corrected under this Section at no additional cost to Owner.

1.6 SUBMITTALS

A. Do not order materials or begin installation of work in this Section until Owner approval of submittals of all products has been obtained.

B. Submit all product literature and color samples to Landscape Architect for approval prior to ordering.

1.7 DELIVERY, STORAGE, AND HANDLING

A. Deliver products in original packaging, labeled with product identification, manufacturer, batch number, and shelf life.

B. Store products in a dry area with temperatures as required by product Manufacturers.

C. Handle products in accordance with manufacturer's printed recommendations.

PART 2 - PRODUCTS

2.1 ACRYLIC RESURFACER FOR UNDER COLOR COATING

A. Underneath the painted game graphics shall be two coats of Acrylic Resurfacer for Bituminous Concrete.

1. The acrylic resurfacer shall be appropriate for athletic line striping, submit manufacturer's information for approval by Landscape Architect.

B. Sand shall be clean, dry sand with 100% passing through a #80 mesh.

C. Water shall be potable and clean.

2.2 COLOR COATING FOR BASKETBALL COURT ON BIT. CONCRETE

A. Final layout and color selections for color coating to be provided by the Landscape Architect before installation.

B. An acrylic color surfacer manufactured by the same company that manufactures the acrylic resurfacer shall be used. The acrylic color surface system shall be designed for high traffic athletic area use. All coatings shall be pure acrylic containing no asphaltic or tar emulsions nor any vinyl, alkyd or non-acrylic resins. The color system shall be factory mixed compounds requiring only the addition of water at the job site except for the addition of sand to the surfacing layer. All materials shall be delivered to the job site in sealed containers with the manufacturer’s label affixed. Colors to be selected by Landscape Architect.

Prepare a sample area for the approval of the Landscape Architect and the Owner's Representative.

C. Sand shall be clean, bagged sand of 50 to 60 mesh.

D. For white color, the opaque portion of the pigment shall be a rutile titanium dioxide, and the vehicle shall consist of a 100% acrylic polymer dispersed in water together with the minimum amounts of necessary additives, such as pigment dispersants, anti-foaming agents, and preservatives, but no dryers shall be used.

E. The paint shall meet a minimum requirement of total solids (percent by weight of paint) of 51.1% and maximum pigment content (percent by weight of paint) of 36%. White paint shall contain not less than three pounds of treated rutile titanium dioxide. A minimum fineness of grind of 4 and a viscosity (Krebs Units) of 80 minimum and 95 maximum is required. The paint shall brush easily; have good lowing, leveling, and spreading characteristics; and shall be suitable for application by spray equipment or rollers.

F. The paint shall be suitable for use over all types of bituminous surfaces. When applied over emulsified asphalt, it shall not cause lifting, crazing, peeling, or other damage to the base.

G. Paint colors available for color selection shall include each of the following from one manufacturer's source: red, green, light green, sky blue, brown, tan, yellow, orange, purple, gray, black, and white as approved by the Landscape Architect. Specific colors to be selected.

2.3 BASKETBALL COURT STRIPING

A. Striping Paint shall be a highly reflective, high-hide, 100% acrylic marking paint intended and suited for use over any bituminous concrete surface or acrylic color-coating system in recreational or light traffic areas. Paint shall not cause cracking, crazing, peeling, or deterioration to asphalt as is common with solvent-style traffic paints.

B. The supplied paint shall not require mixing of separate components.

PART 3 - EXECUTION

3.1 SURFACE PREPARATION

A. New pavement surfaces shall be allowed to cure until the pavement has rid itself of surface oils and water sprayed onto the surface does not bead up or produce an oily sheen before application of marking materials and sealcoating. The duration of curing required will be dependent on the weather, and shall be subject to the judgment of the sealcoat installer and the Landscape Architect.

1. Regardless of weather and other measures, the curing period shall not be less than 14 days.

B. Dust, dirt, and other granular surface deposits shall be removed by sweeping,blowing with compressed air, rinsing with water, or a combination of these methods, as required. Rubber on pavement shall be completely removed

using scrapers, wire brushes, sandblasting, approved chemicals, or mechanical abrasion, as directed.

3.2 COLOR SEAL COATING FOR BASKETBALL COURT

A. Acrylic Resurfacer for Under Color Coating

1. Surface Preparation

a. Prior to acrylic resurfacing, the surface shall be flooded. Any ponding water remaining that is deep enough to cover the thickness of a five cent piece shall be corrected using a patch mix consisting of an acrylic resurfacer, 50 mesh sand, and Portland cement, as per manufacturer's directions. Depressions must be primed with a 50% dilution of the acrylic resurfacer and water prior to patching. All cracks must be cleaned and filled.

b. Acrylic Resurfacer: Apply two (2) coats of acrylic resurfacer to the areas on top of which color will be painted. Wait until first coat is completely dry before applying the second coat. Follow manufacturer's specifications for required dilution of sealant with water and sand. Approximate mixture:

Acrylic resurfacer	55 gallons
Sand (60-80 mesh)	600-900 lbs.
Water	20 – 40 gallons
Liquid Yield	112 – 138 gallons
Application Rate	.07 – 0.08 gallons/SY

B. Color Coating

1. Surface Preparation

a. No color coating to be applied for four days after the installation of the acrylic resurfacer.

b. The surface to be coated shall be inspected and made sure to be free of grease, oil, dust, dirt, and other foreign matter before starting work. All loose material shall be removed by sweeping and pressure washing with water.

c. Limits of areas to be color coated shall be taped with minimum 2-inch width tape, true as to alignment prior to application of the color coating material. Protect all adjacent areas and structures (fences, walls, etc.) which are not to be coated. Protect all site features that are not to receive color coating. In the event that coatings are applied to any of these features, remove immediately, before drying is complete.

2. Application

a. Application shall proceed only if the surface is dry and clean and the air temperature is at least fifty (50) degrees F and rising and the surface temperature is not in excess of one hundred forty

(140) degrees F. Do not apply if it is raining or if rain or sub 50 degree temperatures are anticipated in the next 8 hours.

b. Each coat shall be applied 90 degrees to the previous coat. After each coat is allowed to dry, inspect entire surface. Any defects shall be repaired. Scrape surface to remove any lumps and broom or blow off all loose matter.

c. Apply a minimum of two (2) coats of color coating. After two (2) coats are applied to the pavement, the color coating is ready for final approval only once the color appears solid and no black subsurface is showing through.

d. The color coating is to be diluted by following manufacturer's recommendations.

3. Standards and Completion

a. The finished surface shall be smooth and uniform and free of depressions, ridges, or other irregularities.

b. Upon completion, the contractor shall remove and properly dispose of all construction debris, surplus materials, and empty containers, and leave the site in a condition acceptable to the owner. The coated area is to be left secure so as to prevent vandalism.

3.3 COURT STRIPING

A. Apply paint per manufacturer's instructions, including all instructions regarding curing times before painting, weather conditions, surface conditions, and priming.

B. Both sides of all lines to be striped shall be taped to provide a clean, straight, consistent edge to the finished work. Apply primer or resurfacer over the tape to provide a solid seal. Do not remove tape until product has dried completely.

C. All indicated lines (on plan) are to be the width specified on the Drawings and per the appropriate standards for the sport being striped, where applicable. Landscape Architect shall provide a color key denoting which courts are to be striped in which color.

3.4 CLEANING

A. Waste disposal: Comply with all regulations regarding handling, storage, and disposal of all hazardous materials and waste. Consult local agencies or disposal companies for individual instructions and requirements. Improper disposal of paint and their related materials is illegal and may result in large fines. Please comply with all regulations and minimize waste whenever possible.

B. Perform cleaning during installation and upon completing of court painting work. Remove from site all excess materials, debris, and equipment.

END OF SECTION

PAGE INTENTIONALLY LEFT BLANK

Section 32 84 00
IRRIGATION SYSTEM

PART 1 - GENERAL

1.1 GENERAL REQUIREMENTS

A. Include GENERAL CONDITIONS and applicable parts of Division 1 as part of this Section.

B. Coordinate work of this Section with new and existing underground utilities and with trades responsible for their installation. Refer to respective drawings pertaining to other work.

1.2 WORK TO BE DONE

A. Work to be done includes furnishing labor, materials, equipment and services required to complete irrigation work indicated on the drawings, as specified herein, or both.

B. The mechanical points of connection for the irrigation system shall be taps of the existing water lines, approximately where indicated on plans. See Civil for connection to domestic water main.

C. The electrical points of connection for the irrigation systems shall be to two 120-volt, 20-amp building electrical circuit provided. See Electrical.

D. The drawings and specifications must be interpreted and are intended to complement each other. Furnish and install all parts, which may be required by the drawings and omitted by the specifications, or vice versa, just as though required by both. Should there appear to be discrepancies or question of intent, the matter shall be referred to the Owner's Representative for decision, and his interpretation shall be final, conclusive and binding.

E. Necessary changes to the drawings to avoid obstacles shall be made with the approval of the Owner's Representative.

F. Trench excavation, backfilling and bedding materials, together with the testing of the completed installation shall be included in this work.

G. The Work shall be constructed and finished in every respect in a good, workmanlike and substantial manner, to the full intent and meaning of the drawings and specifications. Parts necessary for the proper and complete execution of the Work, whether the same may have been specifically mentioned or not, or indicated on the drawings, shall be done or furnished in a manner corresponding with the rest of the work as if the same were specifically herein described.

H. Record drawing as well as Operating & Maintenance Manual generation, in accordance to these specifications shall also be included in this work.

1.3 SCOPE

A. The irrigation systems shown on the drawings and described within these specifications represents two, single-controller, turf and athletic field irrigation systems supplied from potable water. The athletic field irrigation system is designed to supply 75 gallons per minute at 80 psi. The amphitheater irrigation system is designed to supply 35 gallons per minute at 70 psi.

1.4 RELATED WORK

A. Carefully examine the Contract Documents for requirements that affect the Work of this Section.

1. Grading Section - 02310.

2. Excavating and Backfilling for Utilities - Section 02320.

3. Planting - Section 02900

4. Electrical Power Supply - Division 16.

1.5 ORDINANCES, PERMITS AND FEES

A. The Work under this Section shall comply with ordinances and regulations of authorities having jurisdiction.

B. Permits, tests, and certifications required for the execution of Work under this Section shall be obtained and paid for.

C. Furnish copies of Permits, Certifications and Approval Notices to the Owner's Representative prior to requesting payment.

D. Include in the bid charges by the Water Department, Utility Company, or other authorities for work done by them.

1.6 EXAMINATION OF CONDITIONS

A. Be fully informed of existing conditions on the site before submitting bid, and be fully responsible for carrying out work required to fully and properly execute the work of the Contract, regardless of the conditions encountered in the actual Work. No claim for extra compensation or extension of time will be allowed on account of actual conditions inconsistent with those assumed, except those conditions described in the GENERAL CONDITIONS.

1.7 QUALITY ASSURANCE

A. Installer: A firm which has at least five (5) years' experience in work of the type and size required by this Section and which is acceptable to the Owner's Representative.

B. References: Supply three references for work of this type and size with the bid including names and phone numbers of contact person(s).

C. Applicable requirements of accepted Standards and Codes shall apply to the Work of this Section and shall be so labeled or listed:

1. American Society for Testing & Materials (ASTM)

   a. ASTM: A536 Ductile Iron Castings

   b. ASTM: D1784 Rigid Poly (Vinyl Chloride) (PVC) Compounds and Chlorinated Poly (Vinyl Chloride) (CPVC) Compounds.

   c. ASTM: D1785 Poly (Vinyl Chloride) (PVC) Plastic Pipe, Schedules 40, 80, and Cl200.

   d. ASTM: D2464 Threaded Poly (Vinyl Chloride) (PVC) Plastic Pipe Fittings, Schedule 80.

   e. ASTM: D2466 Poly (Vinyl Chloride) (PVC) Plastic Pipe Fittings, Schedule 40.

   f. ASTM: D2564 Solvent Cements for Poly (Vinyl Chloride) (PVC) Plastic Piping Systems.

   g. ASTM: B43-98 Brass pipe.

   h. ASTM: B88-99 Seamless Copper Water Tube

   i. ASTM: B828-00 Soldered Copper Joints.

   j. ASTM: F477 Elastomeric Seals (Gaskets) for Joining Plastic Pipe.

   k. ASTM: D2737-99 Polyethylene (PE) Pressure rated tube.

2. National Standard Plumbing Code (NSPC)

3. National Electric Code (NEC)

4. National Sanitary Foundation (NSF)

5. American Society of Agricultural and Biological Engineers (ASABE)

6. Underwriters Laboratories, Inc. (UL)

7. Occupational Safety and Health Administration (OSHA)

8. American Society of Irrigation Consultants (ASIC)

1.8 TESTS

A. Observation: Owner’s Representative will be on site at various times to insure the system is being installed according to the specifications and drawings.

B. Coverage Test: After completion of the system, test the operation of entire system and adjust sprinklers as directed by the Owner's Representative. Demonstrate to the Owner's Representative that irrigated areas are being adequately covered. Furnish and install materials required to correct inadequacies of coverage due to deviations from the drawings or where the system is obviously inadequate or inappropriate. (See Part 3 - Execution).

C. The Owner’s Representative shall be notified 7 days in advance for observations.

1.9 SHOP DRAWINGS

A. Provide copies of product specification sheets on proposed equipment to be installed to the Owner's Representative for approval prior to the start of work, in accordance with the parameters of Division-1. Work on the irrigation system may not commence until product sheets are submitted and approved. Submittals shall be marked up to show proper nozzles, sizes, flows, etc. Equipment to be included, but not limited to:

1. Sprinklers
2. Valves: Manual and Automatic
3. Controllers/ Enclosures
4. Valve Boxes
5. Pipe and Fittings
6. Wire and Connectors
7. Quick Coupling Valves
8. Rain Sensors
9. Decoders
10. Surge Arrestors
11. Backflow Prevention Devices/ Enclosures
12. Water Meter
13. Grounding Equipment

B. Project Record Documents:

1. Provide and keep up-to-date a complete redlined record set of drawings of the system as the project proceeds. Drawings shall be corrected daily, showing every change from the original drawings and specifications. Record drawings shall specify and exactly locate sprinkler type; pop up height and nozzle for each sprinkler installed. Each valve box location to be referenced by distance from a minimum of two permanent locations. Controller(s), decoders, isolation valves, rain sensors, quick coupling valves, back flow prevention devices and other equipment shall be indicated on the drawings. Wire routing, wire size and splices shall be indicated. Mainline pipe and wire route shall have two (2) distinctly different graphic symbols (line types). This redlined record set of drawings shall be kept at job site and shall be used only as a record set.

2. Make neat and legible notations on this record set of drawings daily as the Work proceeds, showing the Work as actually installed. For example, should a piece of equipment be installed in a location that does not match the plan, indicate that equipment in a graphic manner in the location of installation and so as to match the original symbols as indicated in the irrigation legend. Should the equipment be different from that specified, indicate with a new graphic symbol both on the drawings and the irrigation legend. The relocated equipment dimensions and northing and easting coordinates should then be transferred to the appropriate drawing in this record set of drawings at the proper time.

3. On or before the date of final field observation, deliver corrected and completed AutoCAD computer plots of “record drawings” on vellum and AutoCAD electronic files on disk to Owner’s Representative as part of contract closeout. Delivery of plots will not relieve the responsibility of furnishing required information that may have been omitted from the prints.

1.10 DELIVERY, STORAGE AND HANDLING

A. Store and handle materials in compliance with manufacturer instructions and recommendations. Protect from possible damage. Minimize on-site storage.

1.11 GUARANTEE

A. Obtain in the Owner's name the standard written manufacturer's guarantee of materials furnished under this Section where such guarantees are offered in the manufacturer's published product data. Guarantees shall be in addition to, and not in lieu of, other liabilities that the Contractor performing the work under contract may have by law.

B. In addition to the manufacturer’s guarantees the entire irrigation system shall be warrantied, both parts and labor for a period of one (1) year from the date of acceptance by the Owner.

C. As part of the one-year warranty the first year-end winterization and spring start-up for the irrigation system shall be performed.

D. Should problems develop within the warranty period because of inferior or faulty materials or workmanship, they shall be corrected to the satisfaction of the Owner's Representative at no additional expense to the Owner.

E. A written warranty showing date of completion and period of warranty shall be supplied upon completion of the project.

1.12 COORDINATION

A. Work shall be coordinated closely with the Owner's Representative to avoid misunderstandings and to efficiently bring the project to completion. Owner's Representative shall be notified as to the start of work, progression and completion, as well as changes to the drawings before the change is made. Coordinate work with those of other trades.

B. Be responsible and pay for damage to other work caused by work or workmen. Repairing of such damage shall be done by the Company who installed the work as directed by the Owner's Representative.

1.13 MAINTENANCE AND OPERATING INSTRUCTIONS

A. Include in Bid an allowance for four (4) hours of instruction of Owner and/or Owner's personnel upon completion of check/test/start-up/adjust operations by a competent operator (Owner's Representative office shall be notified at least one (1) week in advance of check/test/start-up/adjust operations).

B. Upon completion of work and prior to application for acceptance and final payment, a minimum of three (3) three ring, hard cover binders titled MAINTENANCE AND OPERATING INSTRUCTIONS FOR THE FULLER MIDDLE SCHOOL IRRIGATION SYSTEM, shall be submitted to the Owner's Representative office. After review and approval, the copies will be forwarded to the Owner. Included in the Maintenance and Operating binders shall be:

1. Table of Contents

2. Written description of Irrigation System.

3. System drawings:

   a. One (1) copy of the original irrigation plan;

   b. One (1) copy of the Record Drawing;

   c. One (1) reproducible of the Record Drawing;

   d. One (1) copy of the controller valve system wiring diagram

4. Listing of Manufacturers.

5. Manufacturers' data where multiple model, type and size listings are included; clearly and conspicuously indicating those that are pertinent to this installation.

    a. "APPROVED" submittals of irrigation equipment;

    b. Operation:

    c. Maintenance: including complete troubleshooting charts.

    d. Parts list.

    e. Names, addresses and telephone numbers of recommended repair and service companies.

6. A copy of the suggested "System Operating Schedule" which shall call out the controller program required (zone run time in minutes per day and days per week) in order to provide the desired amount of water to each area under "no-rain" conditions.

7. Winterization and spring start-up procedures.

8. Guarantee data.

1.14 PROCEDURE

A. Notify city departments and/or public utility owners concerned, of the time and location of work that may affect them. Cooperate and coordinate with them in the protection and/or repairs of utilities.

B. Provide and install temporary support, adequate protection and maintenance of structures, drains, sewers, and other obstructions encountered. Where grade or alignment is obstructed, the obstruction shall be permanently supported, relocated, removed or reconstructed as directed by the Owner's Representative.

PART 2 - PRODUCTS

2.1 GENERAL

A. Materials to be incorporated in this system shall be new and without flaws or defects and of quality and performance as specified and meeting the requirements of the system. All material overages at the completion of the installation shall be removed from the site.

B. No material substitutions from the irrigation products described in these specifications and shown on the drawings shall be made without prior approval and acceptance from the Owner's Representative.

2.2 PVC IRRIGATION PIPE

A. Pipe shall bear the following markings: Manufacturer's name, nominal pipe size, schedule or class, pressure rating in psi, and date of extrusion.

B. Pipe in sizes 2-1/2 inches and smaller shall be PVC, Class 200, Type 1120, SDR 21, Solvent-Weld PVC, conforming to ASTM No. D2241 as manufactured by Certainteed, Caresline, JM Eagle or equal.

C. The pipe insertion mark shall be visible to show the proper depth into spigot.

2.3 COPPER PIPE AND FITTINGS

A. Copper pipe shall be Type K, hard tempered ASTM B88.

B. Copper fitting shall be wrot copper, solder joint type in accordance with ASTM B828-00.

C. Joints shall be soldered with silver solder ASTM B32, Grade 95TA up to 250 degree using non-corrosive flux.

D. Supply only pipes and fittings that are marked by the manufacturer with the appropriate ASTM designations and pressure ratings and are free from cracks, wrinkles, blisters, dents or other damage.

2.4 BRASS PIPE AND FITTINGS

A. Brass pipe shall be 125lb., cast bronze, ground joint pattern, threaded, ASTM B43-98.

B. Brass fittings shall be cast bronze, screwed, 125lb. Class.

2.5 PVC PIPE SLEEVES

A. Pipe sleeves beneath non-soil areas shall be minimum PVC, Class 160 water pipe as manufactured by Certainteed, Cresline, JM Eagle or equal. Minimum sleeve size to be 3-inch.

2.6 WIRE CONDUIT

A. Conduit for wiring beneath non-soil areas shall be PVC, SCH-40 conduit with solvent-weld joints, as manufactured by Cresline, Carson, JMM or equal.

B. Communication wire and cable shall be installed within a schedule 40 1-inch PVC conduit with solvent welded joints a minimum of 18-inches below grade. Provide 6-inch minimum separation between communication cable conduit and irrigation pressure mainline piping. If communication cable is not installed under this contract, install a 1/4-inch nylon pull rope within entire length of conduit.

C. Sweep ells shall be standard electrical type PVC schedule 40 long sweep elbows.

2.7 PVC IRRIGATION FITTINGS

A. Fittings for solvent weld PVC pipe, 2-1/2 inch and smaller in size, shall be Schedule 40 solvent weld PVC fittings as manufactured by Dura, Lasco, Spears or equal.

B. Fittings shall bear manufacturer's name or trademark, material designation, size, and applicable I.P.S. schedule.

C. PVC threaded connections in and out of valves shall be made using Schedule 80 toe nipples and Schedule 40 couplers or socket fittings. Schedule 40 threads will not be approved for installation.

D. PVC solvent shall be NSF approved, for Type I and Type II PVC pipe, and Schedule 40 and 80 fittings. Cement shall be medium not fast or hot, no wet and dry. Cement is to meet ASTM D2564 and FF493 for potable water pipes. PVC solvent cement shall be Rectorseal Gold, IPS Weld-ON 711, Oatey Heavy Duty Cement or equal, and shall be used in conjunction with the appropriate primer. Primer shall be NSF approved, and formulated for PVC and CPVC pipe applications. Primer is to meet ASTM F 656. Primer shall be Rectorseal Jim PR-2, IPS Weld-ON P-70, Oatey Primer for PVC and CPVC, or equal. Clear primers shall not be allowed.

E. Nipples to be schedule 80 PVC.

2.8 SPRAY SPRINKLERS

A. Full and part circle pop up spray sprinklers shall be pressure regulating (30-psi), plastic construction with ratcheting riser, removable nozzle and check valve. Nozzle size shall be as indicated on the drawing and in the legend. Pop-up height shall be 6 inches.

B. Sprinkler shall carry a minimum 3-year exchange warranty against defects. Sprinklers shall be manufactured by Toro, model 570Z-PRX-COM, Rain Bird, model 1800-SAM-PRS, Hunter Industries, model PRO30-CV or approved equal.

2.9 SMALL/MEDIUM ROTARY SPRINKLERS

A. Small/medium rotary sprinklers shall be gear-driven, rotary type sprinklers, designed for in-ground installation with integral check valves and in-riser flow shut-off capability. Sprinkler shall be capable of covering a 25-44 foot radius and flow range of 0.9-7.0 gpm at 50-55 pounds per square inch of pressure. Sprinklers shall have a one hundred percent warranty for two years minimum against defects in workmanship.

B. The nozzle assembly shall elevate minimum four inches when in operation and retraction shall be achieved by a stainless steel spring. Riser assembly shall be plastic. A nozzle wiper seal shall be included in the sprinkler for continuous operation under the presence of sand and other foreign material.

C. Sprinkler parts shall be removable through the top of the unit through the removal of a heavy-duty threaded cap. The sprinkler shall have a three quarter-inch (3/4") IPS water connection on the bottom of the sprinkler.

D. Sprinklers shall be manufactured by Toro model T5P-COM, Rain Bird model 5004-PL-SAM, Hunter Industries model I20-04 or approved equal.

E. Approved Performance Chart (18' Spacing):

Model	Pressure	Arc	Nozzle	Flow	Radius
Toro T5P-COM	45psi	90 Deg.	1.0LA	1.02	28'
Toro T5P-COM	45psi	180 Deg.	2.0LA	1.52	31'
Rain Bird 5004-PL-SAM	45psi	90 Deg.	MPR 25Q	1.00	26'
Rain Bird 5004-PL-SAM	45psi	180 Deg.	MPR 25H	1.98	27'
Rain Bird 5004-PL-SAM	45psi	360 Deg.	MPR 25F	3.82	31'
Hunter I20-04	50psi	90 Deg.	.5SR	0.5	18'
Hunter I20-04	50psi	180 Deg.	1.0SR	1.0	18'

F. Approved Performance Chart (25' Spacing):

Model	Pressure	Arc	Nozzle	Flow	Radius
Toro T5P-COM	45psi	90 Deg.	1.5LA	1.05	29'
Toro T5P-COM	45psi	180 Deg.	2.5LA	2.02	32'
Rain Bird 5004-PL-SAM	45psi	90 Deg.	MPR 25Q	1.00	26'
Rain Bird 5004-PL-SAM	45psi	180 Deg.	MPR 25H	1.98	27'
Hunter I20-04	50psi	90 Deg.	.75SR	0.75	25'
Hunter I20-04	50psi	180 Deg.	1.5SR	1.5	25'

G. Approved Performance Chart (35’ Spacing):

Model	Pressure	Arc	Nozzle	Flow	Radius
Toro T5P-COM	55psi	90 Deg.	2.0	2.30	37’
Toro T5P-COM	55psi	180 Deg.	4.0	4.44	42’
Toro T5P-COM	55psi	360 Deg.	8.0	8.86	50’
Rain Bird 5004-PL-SAM	55psi	90 Deg.	1.5	1.71	35’
Rain Bird 5004-PL-SAM	55psi	180 Deg.	3.0	3.47	40’
Rain Bird 5004-PL-SAM	55psi	360 Deg.	6.0	6.63	47’
Hunter I20-ADV	50psi	90 Deg.	2.0	2.0	38’
Hunter I20-ADV	50psi	180 Deg.	4.0	4.2	41’
Hunter I20-36V	50psi	360 Deg.	8.0	6.8	44’

H. Approved Performance Chart (45’ Spacing):

Model	Pressure	Arc	Nozzle	Flow	Radius
Toro T5P	55psi	90 Deg.	4.0	4.44	42’
Toro T5P	55psi	180/360 Deg.	6.0	6.63	47’
Rain Bird 5004-PL-SAM	55psi	90 Deg.	4.0	4.15	42’
Rain Bird 5004-PL-SAM	55psi	180/360 Deg.	8.0	8.31	47’
Hunter I20-04	55psi	90 Deg.	4.0	4.5	41’
Hunter I20-04	55psi	180/360 Deg.	8.0	9.0	46’

2.10 LARGE ROTARY SPRINKLERS (TO BE PROVIDED BY OWNER)

A. Large rotary sprinklers shall be gear-driven, rotary type with drain check valve and stainless steel riser designed for in-ground installation. The nozzle assembly shall elevate three inches when in operation and retraction shall be achieved by a stainless steel spring. Check valve shall be capable of holding up to 10 feet of elevation. Sprinkler shall be capable of covering a 49-61 foot radius and flow range of 7.5 to 15.7 gpm at 60 pounds per square inch of pressure.

B. Sprinkler parts shall be removable through the top of the unit by removing a heavy-duty threaded cap. The sprinkler shall have a one- inch (1") IPS water connection on the bottom of the sprinkler.

C. Sprinklers shall be manufactured by Hunter Industries model I25-04-SS.

D. Sprinklers shall be purchased and provided to the contractor by The City of Framingham.

E. Approved Performance Chart (50' Spacing):

Model	Pressure	Arc	Nozzle	Flow	Radius
Hunter I25-04-SS	60psi	90 Deg.	7	7.5	48'
Hunter I25-04-SS	60psi	180/360 Deg.	13	12.3	54'

F. Approved Performance Chart (55' Spacing):

Model	Pressure	Arc	Nozzle	Flow	Radius
Hunter I25-04-SS	60psi	90 Deg.	8	9.2	50'
Hunter I25-04-SS	60psi	180/360 Deg.	18	15.7	59'

2.11 ELECTRIC CONTROL VALVES

A. Electric control valves shall be one, one and one half and two-inch remote control, diaphragm type, fiberglass or reinforced nylon body plastic valves with manual flow control, manual bleed screw and 200 psi pressure rating.

B. Valves shall be manufactured by Toro model P220, Rain Bird model PEB, Hunter Industries model ICV or approved equal.

2.12 VALVE BOXES

A. All valve boxes shall be manufactured from unformed resin with a tensile strength of 3,100-5,500 psi conforming to ASTM D638. All boxes shall be green or black in color.

B. Valve boxes for single 1 inch and 1-1/2 inch electric valves, isolation valves and quick coupling valves shall be 10-inch round valve boxes with metal detection, t-tops, and bolt down covers

C. Valve boxes for single 2 inch and multiple electric valves shall be 12-inch standard valve boxes with metal detection, t-tops, and bolt down covers. When multiple electric valves are installed in the same area, they are to be installed two (2) 1-1/2 inch valves or up to three (3) 1 inch valves in a 12-inch standard box

D. Valve boxes for three 1 inch, three 1-1/2 inch and dual 2 inch electric valves with isolation shall be 18-inch jumbo valve boxes with metal detection, bolt down covers and t-top lids.

E. Valve boxes for wire splices shall be 10 inch round valve boxes with metal detection, bolt down covers and t-top lids. All splices shall be in separate valve boxes and not included with isolation valves.

F. Valve box extensions shall be provided and installed as required for proper box depth. Valve box extensions shall be made by the same manufacturer.

G. Valve boxes shall be manufactured by Highline Products, Olde Castle Specifications Grade, NDS Pro Series or approved equal.

2.13 AUTOMATIC CONTROLLER (AMPHITHEATER)

A. Controller shall be Manufactured by Baseline Inc, in Meridian, Idaho model BL3200 (Basis of Design), ACC-99D, Rainbird model ESP-LXD, or approved equal, and installed per Manufacturer's Specifications, and as specified herein.

B. Each controller shall be able to operate:

1. Up to 100 zones along a two-wire path and/or a conventional wire path (Expanded), 50 normally.
2. Up to 20 moisture sensors (Expanded), 10 normally.
3. 20 separate programs (Expanded), 10 normally.
4. Support one POC (flow meter, master valve, pump start) Expandable to 3 POC
5. Direct wire to internet through Ethernet port and use "Live View" to manage your controller anywhere.
6. Concurrently operates up to 15 AC solenoids along two wire path or 100 DC latching solenoids.'
7. Supports 110 devices on two wire path.
8. Supports two way communications with two-wire decoders.
9. 8 start times per program.

10. Supports up to seven separately normally open or normally closed pause or event devices.
11. Execute a high flow or low flow shutdown based on total system flow or on flow per flow meter.
12. Detects and repairs all address conflicts for devices that are connected to the two-wire path from the controller.

C. Each controller shall be capable of storing irrigation schedules, monitoring and managing flow without the Central Computer (i.e. if the Central Computer is turned off, removed, or if communication from/to the Central Computer fails, the field controllers will continue to perform moisture and flow management functions). The controller shall display on-screen instructions making it easier for a user to operate the controller.

D. Programmable features include:

1. 8 start times per program in 10 minute increments
2. Run time for zones from 1 second to 18 hours in one second increments
3. Day intervals in even, odd, or odd days excluding the31st
4. Create a custom 7 day calendar, and historical calendar with customizable half months
5. Program unique cycle soak times for each program. Soak times can be programmed between 0 minutes and 18 hours.
6. Specify hours during each day of the week when or when not water can be applied in one hour increments in a 24 hour period.
7. Assign start, stop and pause irrigation modes to each program, including time based, event based and soil moisture sensor based behaviors.
8. Manually enter a design flow for each zone with or without an installed flow meter.
9. Automatically calibrate soil moisture thresholds and make irrigation decisions based on those thresholds.
10. Adjust seasonal water budget from 10% to 200% by program.
11. Schedule up to 8 future event dates when watering will not occur.
12. Manually operate one zone, or all zones of a program, with programmable runtimes, delay before starting first zone, and time between zones.
13. Search and define all devices connected to the two-wire and list them according to device type and serial number.
14. Back up all programming and historical data with a USB flash drive
15. Establish three levels of local and remote PIN protection: status and stop, manual runs and full programming access.
16. Configure pipe stabilization time for flow management.

E. The controller shall be able to send alerts to Live View or central software at an offsite location utilizing supported devices. Alerts shall be processed at both the field controller location and/or the Central Computer location (requires communication module). Ethernet is built in for Live View but can be used for central control with software. Communication options for central control shall be as follows:

1. Cellular modem
2. Wi-Fi

3. Ethernet Radio
4. Long Haul Ethernet Wired Communication

F. The controllers shall be able to provide real time soil moisture measurements and watering feedback to the user. It includes integrated tools and software that self-diagnose problems and generate alerts and messages, and then displays the messages on the screen and remotely. It displays on screen total runtime and water used for the last two days, actual or estimated flow values, 7-day scalable soil moisture graph with 12 reading per day. It displays all pause and stop conditions in message screens. One message will be displayed for each condition and each message can be individually removed. It further displays high flow alerts, low flow alerts, pause messages and conditions, rain delays, wire faults and other operating conditions.

G. Controller equipped with 10 levels of surge protection, 5 levels built into the controller boards with a minimum surge response time of 1 picosecond.

2.14 AUTOMATIC CONTROLLER (ATHLETIC FIELD – TO BE PROVIDED BY OWNER)

A. The athletic field controller shall be purchased and provided to the contractor by The City of Framingham.

B. Controller shall be Manufactured by Baseline Inc, in Meridian, Idaho model BL3200 and installed per Manufacturer's Specifications, and as specified herein.

C. Each controller shall be able to operate:

1. Up to 200 zones along a two-wire path and/or a conventional wire path
2. Up to 25 moisture sensors
3. Up to 6 pause device inputs (3 normally closed along the two-wire path and 3 hard-wired normally closed pause interrupts)
4. Up to 4 normally open or normally closed master valves
5. Up to 4 flow meters
6. Up to 110 devices on a two-wire path

D. Each controller shall be capable of fully automatic, semi-automatic, and manual operation using a 6-button keypad and 16 position rotary dial that is an integrated part of the controller. Each controller shall be capable of storing irrigation schedules, monitoring and managing flow without the Central Computer (i.e. if the Central Computer is turned off, removed, or if communication from/to the Central Computer fails, the field controllers will continue to perform moisture and flow management functions). The controller shall display on-screen instructions making it easier for a user to operate the controller.

E. The controller shall be able to send alerts to central software at an offsite location utilizing supported devices. Alerts shall be processed at both the field controller location and/or the Central Computer location. Communication options shall be as follows:

1. Cellular modem
2. Wireless internet modem

3. Phone modem
4. Ethernet modem
5. Direct connection serial interface

F. The controller's main screen shall be able to display water usage, soil moisture graph, next program run time, temperature of the controller, design flow or actual flow, two-wire current, program reports, pause reports, and a color zone status (watering, soaking, waiting, paused, disabled, and error) without affecting active programs. The controller shall provide an on-screen color code legend that describe each zones state The controller shall be able to log data collected from each flow meter and zone (run time, soak time).

G. The controller shall have the ability to report:

1. The last date a program ran
2. A progress bar for all currently running programs describing how much run time is remaining
3. The next run date of a program
4. Water consumption used by program per run estimation
5. 14 days of moisture readings displayed graphically
6. Water flow estimation in gallons per minute
7. Total daily, current month, and previous month's water consumption estimation in gallons
8. Actual water used and flow rate for each flow meter
9. A report for every pause condition event
10. Monthly water budget.

2.15 DECODERS

A. Decoders shall be installed between the central controller and the electric control valves to provide the 24-volt power supply for individual valves. Each decoder shall be available in 1, 2 or 4-station devices. Decoder shall have a unique serial number and controller-assigned address to identify it in the network.

B. Decoders shall be manufactured by Baseline, model biLine, Hunter Industries model ICD-X00, Rainbird model FD-101, or approved equal and as necessary for compatibility with controller.

2.16 SURGE ARRESTORS

A. The modular surge arrester shall be a single phase, two pole arrester designed to protect single or split phase 120 volt or 120/240 volt electrical systems. Electrical connections shall be embedded in a UL recognized epoxy to seal and protect them from moisture and corrosion.

B. The surge arrestor shall be molded from weather and UV resistant polycarbonate, complying with the UL Standard for flame and strength resistance.

C. Surge Arrestor shall be manufactured by Intermatic model, AG2401C, Rainbird model LSP-1, Hunter Industries ICD-XXX decoder with surge suppression with ground wire, or approved equal.

D. Manufacturer's names and/or model numbers identified herein are intended to assist in establishing a general level of quality, configuration, functionality, and appearance required. This is NOT a proprietary specification and it should be noted that "Or equal" applies to all products denoted herein. It is understood that all manufactures will have minor variations in configuration, appearance, and product specifications and such minor variations shall not eliminate such manufacturers as an equal". It is the intent of this specification to encourage open and competitive involvement from multiple manufacturers that are able to supply similar products.

2.17 WIRE

A. All valve control wire from the decoder to the valve shall be minimum #14-awg, common #14-awg, single strand, solid copper; UL- approved direct burial AWG-U.F. 600V and shall meet all state and local codes for this service. Individual wires must be used for each zone valve. Common wire shall be white in color, control wire for spray and rotor zones shall be red in color, drip zone control wire shall be orange and spare wires, installed where indicated on the drawings shall be blue. White color shall be used for common wire only.

B. In ground wire connections shall be UL listed, manufactured by 3M, model DBR/Y-6 Hunter Industries DBRYXXX, DryConn DBRY-600, or equal. All wire splices shall be made in valve boxes, electrical junction boxes, at the controller or at valves. See Mechanical/Electrical/Plumbing Drawings.

C. All valve control wire from the controller to the decoder shall be through two-wire. Wiring shall be polyethylene double-jacketed or UF-B UL PVC double-jacketed two-conductor solid copper designed for direct burial systems. Wire connections shall be DBR/Y-6 or equivalent on the wire side of the decoder and shall utilize DBR/Y-6 or equivalent on the valve side. All connections shall be installed as per their manufacturers' instructions. Wire shall be manufactured by Paige Electric (maxi wire) or approved equal. Wire gauge shall be AWG #14.

D. Wire type and method of installation shall be in accordance with local codes for NEC Class II circuits of 30-volt A.C. or less.

E. All wiring shall be in strict accordance with all national, state and local electrical codes.

2.18 QUICK COUPLING VALVES

A. The valve body shall be of cast brass construction with a working pressure of 125 psi. The valve seat disc plunger body shall be spring loaded so that the valve is normally closed under all conditions when the key is not inserted.

B. The top of the valve body receiving the key shall be equipped with ACME threads and smooth face to allow the key to open and close the valve slowly. The quick coupling valve shall be equipped with a vinyl cover.

C. The valve body construction shall be such that the coupler seal washer may be removed from the top for cleaning or replacement without disassembling other parts of the valve.

D. Keys shall be ACME with 1-inch male thread and 3/4-inch female thread at the top.

E. Provide two (2) keys for quick couplers and two (2) 1-inch x 3/4-inch swivel hose ells.

F. Quick coupling valves, keys and swivels shall be manufactured by Toro models 100-ATLVC, 100-AK and 075-MHS, Hunter Industries, model HQ-44RC-AW, HK-44A and HS-1, Rainbird model 44-RC, or approved equal.

2.19 ISOLATION VALVES

A. Isolation valves 2-1/2 inches and smaller in size shall be gate type, of bronze construction, US Manufacture, 200 WOG with steel cross handle and 200 psi rating. Gate valves to be as manufactured by Nibco, model T-113-K, Apollo model 102T-K, Watts model GV, or approved equal.

2.20 SWING JOINTS

A. Small/ medium rotors shall be installed on swing pipe assemblies, minimum length 12 inches and maximum length of 18 inches.

B. Swing pipe operating pressure shall be up to 80 psi with an inside diameter of 0.49 inches, manufactured of low-density polyethylene material meeting ASTM D2104, D2239 and D2737. Swing joint swing pipe and fittings shall be manufactured by Hunter Industries, model FLEXsg, with HSBE-050 and HSBE-075 fittings, Toro580-25with 850-31and 850-32, Rain Bird, model SPX-FLEX100 with SBE-050 and SBE-075 or approved equal.

C. Quick coupling valves to be installed on 1-inch prefabricated PVC unitized swing joint assemblies with double O-ring seals, minimum 315 psi rating and minimum length of 12 inches with brass insert and stabilizer (unless stabilizer is an integral part of the quick coupling valve). Prefabricated PVC swing joints shall be as manufactured by Dura, Lasco, or Spears.

2.21 WIRELESS AUTOMATIC RAIN SENSOR

A. Rain sensor shall be polycarbonate in construction with adjustable interruption point and metal extension arm. Wireless rain sensor shall operate up to 400 feet from receiver unit and have built-in bypass switch on receiver panel.

B. System operating frequency shall be 433MHz. Package shall be UL listed, FCC approved.

C. Receiver input power shall be 24 VAC from controller.

D. Rain Sensor package shall carry a five (5) year warranty.

E. Rain sensor shall be manufactured by Hunter Industries, model WR-CLIK, Rainbird model WR2-RFC, Toro model TWRS or approved equal. Sensor package shall include both the transmitter and the receiver as required.

2.22 BACKFLOW PREVENTION DEVICES

A. Back flow prevention device for the athletic field shall be 2-inch Reduced Pressure Assembly as per requirements of the City of Framingham Cross Connection Department requirements. Back flow prevention device shall have maximum 12-psi pressure loss at system flow.

B. Back flow prevention device for the amphitheater shall be 1-1/4-inch Reduced Pressure Assembly as per the City of Framingham Cross Connection Department requirements. Back flow prevention device shall have maximum 12-psi pressure loss at system flow.

C. Back flow prevention devices shall be as manufactured by Watts LF009M2QT, Wilkins 975XL2, Febco, LF860, or approved equal and as approved by the Local Water Department.

2.23 WATER METER

A. Water meter shall be as sized on the drawings as per City of Framingham Water Department requirements.

B. Water meter shall also be equipped with in-line strainer, fabricated by same manufacturer.

C. Water meter where 2” and above in size shall be as manufactured by Neptune, model Tru-Flo Compound Water meter, or approved equal (pending approval from local Framingham Water Department). Water meter where 1” in size shall be as manufactured by Neptune, model T-10 or equal (pending approved from Framingham Water Department)

2.24 BACK FLOW ENCLOSURE

A. The back flow prevention device enclosure shall be of a vandal and weather resistant nature manufactured entirely of marine grade aluminum alloy 5052-H32, with a wall thickness of one-eighth inch.

B. The mounting base shall be manufactured entirely of stainless steel. The main housing shall be of solid sheet construction and have a minimum R-6 insulation valve. The length of the enclosure shall be expandable to allow for site adjustment. The enclosure shall have a mounting lip on one end and a locking mechanism on the other end. The mounting base shall be submerged into the concrete a minimum of two inches, and position the enclosure two and one half inches above the concrete for drainage purposes.

C. The locking mechanism shall be of the full release type, which allows for complete removal of the enclosure from its mounting base without the use of tools. The handle controlling the locking mechanism shall be concealed within the surface of the enclosure and provide for a padlock.

D. The enclosure shall be approximately 39 inches high, 24 inches wide and 90 inches long or as necessary to properly enclose all specified and required

equipment. Enclosure shall be as manufactured by VIT Products, Inc., model SBBC-90ALHP, Hydrocowl Safe-T-Cover, model 600-AL, Hubbel Power Systems, Model HBM3E or approved equal.

2.25 CONTROLLER ENCLOSURE

A. The enclosure shall be vandal and weather resistant in nature manufactured entirely of 304-grade stainless steel. The main housing door shall be louvered at the bottom and equipped with a hollow center thermoplastic door seal. The entry lip shall be louvered on the backside. Filter screens shall cover all louvers. The top entry lid shall have two gas springs, for easy access, a continuous stainless steel piano hinge, and a three point locking mechanism with provisions for padlock. Removable stainless steel tray shall be provided and installed for the mounting of electronics and other equipment.

B. The enclosure shall be a NEMA 3R Rainproof Enclosure as listed by Underwriters Laboratories, Inc.

C. Controller enclosure shall be approximately 16 inches wide x 15.5 inches deep x 38 inches tall, as manufactured by Strong Box, model SB-16SS, Hunter Industries model ACC-PED-SS, Baseline BL-P or approved equal.

2.26 GROUNDING EQUIPMENT

A. Each exterior field controller installed outside of a building shall include factory-installed and factory-recommended lightning protection and shall be connected to a 5/8-inch diameter x 10-foot long copper clad grounding rods with minimum #6 AWG, solid, bare copper wire and 4-inch x 96-inch x 0.0625-inch copper grounding plates as outlined below. Minimum 20-foot separation between rod and plate. Minimum 12-foot separation between controller and ground rod. All connections to rods shall be with Cadweld or approved equal connectors as specified. All connections to plates shall be performed by the plate manufacturer (Paige #182199L) or approved equal with 25-feet of bare copper wire already attached. Each grounding rod is to be covered by a 4-inch round, grated top, plastic valve cover with metal detection and six inches of 4-inch ADS or approved equal drainage pipe. Plates shall be installed in ground enhancement material. Plates shall be covered with 4-inch plastic grated cover with detection and minimum 36 inches of 4 inch ADS or approved equal drainage pipe. Ground rods and plates shall be UL listed.

B. Each controller shall be grounded to one rod and one plate. The 10-foot rod shall be installed penetrating into the soil to its full length. Plate shall be installed at a 36-inch depth with 50 lbs of Power Set or approved equal ground enhancement material spread evenly below the plate and 50 lbs spread evenly above the plate in accordance with manufacturer's requirements. The grounding electrodes shall be installed at least 10 feet from wires connected to the field controllers. Each field controller shall have a separate grounding system.

2.27 GROUNDING EQUIPMENT

A. Two-wire communication path shall be grounded at 600 foot maximum intervals, at every termination of a part of the wire path to a surge arrestor decoder where indicated on the drawings, and 50 feet from the controller. Each surge decoder shall be connected to a 5/8-inch diameter x 8-foot long copper clad grounding rod with minimum #6 AWG, solid, bare copper wire as outlined below. Minimum 8-foot separation between rod and other equipment. All connections to rods shall be with Cadweld connectors as specified. Each grounding rod is to be covered by a 4-inch round, grated top, plastic valve cover with metal detection and six inches of 4-inch ADS drainage pipe. Ground rods and plates shall be UL listed.

2.28 CRUSHED STONE

A. Crushed stone shall be as specified in SECTION: EARTHWORK. Crushed stone shall be used under valve boxes.

2.29 SAND

A. Sand used for backfilling of trenches; under, around and over PVC lines shall be as specified in SECTION: EARTHWORK.

2.30 CONCRETE BASES

A. Standard concrete mix shall be in accordance with ASTM C150, ASTM C-33, and ASTM C-94 with a compressive strength (28 days) of 3,000 psi.

B. Concrete bases shall be standard concrete mix. Sizes shall be as indicated on the drawings and cited in the specifications.

2.31 SPARE PARTS

A. Supply the following tools and equipment to the Owner's Representative before final observation:

1. Two (2) wrenches or keys for disassembling and adjusting each type of sprinkler provided.

2. Two (2) quick coupler key assemblies.

3. Five (5) of each type sprinkler and pattern (PC & FC) used in the project.

4. Five (5) of each type nozzle used in the project.

B. Before final observation can occur, written evidence that the Owner's Representative has received the tools and equipment must be shown.

PART 3 - EXECUTION

3.1 GENERAL

A. Before work is commenced, hold a conference with the Owner's Representative to discuss general details of the work.

B. Examine contract documents applying to this Section noting discrepancies and bringing the same to the attention of the Owner's Representative for timely resolution.

C. Works indicated on drawings shall be provided whether or not specifically mentioned in the specifications.

D. If there are ambiguities between drawings and specifications, and specific interpretation or clarification is not issued prior to bidding, the interpretation or clarification will be made only by Owner's Representative, and compliance with the decisions shall be required. In the event the installation contradicts the directions given, the installation shall be corrected at no additional cost to Owner.

E. Verify dimensions and grades at job site before work is commenced. Do not proceed with installation of the irrigation system when it is apparent that obstructions or grade differences exist or if conflicts in construction details, legend or specific notes are discovered. All such obstructions, conflicts, or discrepancies shall be brought to the attention of the Owner's Representative.

F. Make field measurements necessary for the work noting the relationship of the irrigation work to the other trades. Coordinate with other trades (landscaping and other site work trades). Project shall be laid out essentially as indicated on the Irrigation Plans, making minor adjustments for variations in the planting arrangement. Major changes shall be reviewed with the Owner's Representative prior to proceeding.

G. Layout of sprinkler lines indicated on drawings is diagrammatic. Location of sprinkler equipment is contingent upon and subject to integration with all other underground utilities. Employ all data contained in the Contract Documents and verify this information at the construction site to confirm the manner by which it relates to the installation.

H. Coordinate installation of all sprinkler materials, including pipe, to avoid conflict with the trees, shrubs, or other plantings.

I. During progress of work, a competent superintendent and all assistants necessary shall be on site. All shall be satisfactory to the Owner's Representative. The superintendent shall not be changed, except with the consent of the Owner's Representative, unless that person proves unsatisfactory and ceases to be employed. Directions given to the superintendent shall be binding.

J. At all times, protect existing irrigation, landscaping, paving, structures, walls, footings, etc. from damage. Inadvertent damage to the work of another trade shall be reported at once.

K. Replace, or repair to the satisfaction of the Owner, all existing paving disturbed during course of work. New paving shall be the same type, strength, texture, finish, and be equal in every way to removed paving.

3.2 PIPE AND FITTINGS INSTALLATION

A. Using proper width trencher chain, excavate a straight (vertical) and true trench to a depth of 2-inch of pipe invert elevation.

B. Loam or topsoil encountered within the limits of trench excavation for irrigation mains and branch lines shall be carefully removed to the lines and depths as shown on the drawings and stockpiled for subsequent replacement in the upper 6 inches of the trench from which it is excavated. Such removal and replacement of the quantities of loam shall be considered incidental to the irrigation system and no additional compensation will be allowed therefore.

C. Pipe shall be laid on undisturbed trench bottom provided suitable base is available - no rock; if not, excavate to 2-inch below pipe invert and provide and install sand base or crushed stone upon which to lay pipe.

D. Backfilling shall be accomplished as follows: backfill material shall contain no foreign matter and no rock. Carefully place material around pipe and wire and tamp in place. Remainder of backfill shall be laid-up in 6-inch (maximum) lifts and tamped to compaction with mechanical equipment. Compact backfill in trenches to dry density equal to the adjacent undisturbed soil, and conform to adjacent grades without dips, sunken area, humps, or other irregularities. Frozen material shall not be used for backfill.

E. Make all solvent-weld joints in strict accordance with manufacturer's recommendations, making certain not to apply an excess of primer or solvent, and wiping off excess solvent from each connection. Allow welded joints at least 15 minutes set-up/curing time before moving or handling. When the temperature is above 80º F, allow connections to set minimum 24 hours before pulling or pressure is applied to the system. When temperature is below 80º F, follow manufacturer’s recommendations. Provide and install for expansion and contraction as recommended. Wire shall be laid in same trench as mainline and at pipe invert (see Wire Installation).

F. Mainline pipe shall have minimum 22 inches of COVER (excavate to invert as required by pipe size). Lateral pipe shall have minimum 16 inches of COVER for PVC and 12 inches of cover for Polyethylene (excavate to invert as required by pipe size).

G. Cut plastic pipe with handsaw or pipe-cutting tool, removing all burrs at cut ends. All pipe cuts are to be square and true. Bevel cut end as required to conform to Manufacturer's Specifications.

H. Every precaution shall be taken to prevent foreign material from entering the pipe while it is being placed in the trench. At times, when installation of the piping is not in progress, the open end(s) of the pipe shall be closed by a watertight plug or other means. All piping, which cannot temporarily be joined, shall be sealed to

make as watertight as possible. This provision shall apply during the lunch hour as well as overnight. Pipe not to be installed that day shall not be laid out. Should water enter the trench during or after installation of the piping, no additional piping may be installed or backfilled until all water is removed from the trench. Pipe shall not be installed when water is in the trench, when precipitation is occurring, or when the ambient temperature is at 40º F or below. Pipe installed at temperatures below 40º F shall be removed and replaced at no cost to the Owner. PVC pipe shall be snaked in the trench to accommodate for expansion and contraction due to changes in temperature.

I. In installing irrigation pipe route the pipe as necessary to prevent damage to tree roots. Where trenching must occur near trees provide proper root pruning and sealing methods to all roots 1-inch and larger.

J. Maintain 6-inch minimum clearance between sprinkler lines and lines of other trades. Do not install sprinkler lines directly above another line of any kind.

K. Maintain 1-inch minimum between lines which cross at angles of 45 to 90 degrees.

L. Throughout the guarantee period refill trenches that have settled due to incomplete compaction.

M. Pulling of pipe will be allowed provided soil is suitable and specified depth of bury can be maintained.

3.3 ELECTRICAL WIRE CONDUIT INSTALLATION

A. Electrical conduit shall be installed in all non-soil areas, as well as for all above ground wiring where wire passes under or through walls, walks and paving to controllers.

B. Conduit shall extend 18 inches beyond edges of walls and pavement.

3.4 PIPE SLEEVING INSTALLATION

A. Sleeving shall be installed wherever piping is going under hardscape areas where indicated on the drawings. Minimum cover over all sleeving pipe shall be 24 inches as shown on the detail.

B. Sleeving shall extend 18 inches beyond edges of walls and pavement. Prior to the installation of irrigation piping and wiring, the ends of all sleeving shall be field marked with a vertical wood stake extending above grade to allow field location at the time of irrigation installation.

C. Ensure required sleeving is installed prior to starting pavement operations. Review all sleeve locations in the field to confirm that sleeves are properly located for the required irrigation pipe runs. In no case will sawcutting into newly installed pavements or jacking under new pavements be permitted to install sleeving which was not installed in proper sequence or in the required orientations or locations.

3.5 ISOLATION VALVE INSTALLATION

A. Install isolation valves per detail where indicated on the drawings. Install all isolation valves on a level crushed stone base so that they can be easily opened or closed with the appropriate valve wrench. Install specified valve box over each isolation valve.

B. Check and tighten valve bonnet packing before valve box and backfill installation.

C. Provide and install thrust blocks for ring-tite valves as per detail.

3.6 VALVE BOX INSTALLATION

A. Furnish and install a valve access box for each electric valve, decoder, surge arrestor, quick coupling valve, isolation valve, and wire splice.

B. Valve access boxes shall be installed on a minimum 4-inch crushed stone base. Finish elevation of all boxes shall be at grade. Supply all crushed stone and install before valve box. Crushed stone shall not be poured into previously installed valve boxes.

C. Valve boxes shall be installed neatly at all times. Boxes shall be parallel or perpendicular to hardscape edges and to other valve boxes installed in the same location. A sufficient amount of turf shall remain in place between each valve box and between valve boxes and hardscapes.

D. Valve box extensions shall be provided as required on valve boxes in order to install valve box covers at grade.

E. Bricks, stones, etc. shall not be used to support valve boxes.

3.7 24 VOLT CONTROL VALVE INSTALLATION

A. Control valves shall be installed on a level crushed stone base. Grade of bases shall be consistent throughout the project so that finish grades fall within the limits of work. Valves shall be set plumb with adjusting handle and all bolts, screws and wiring accessible through the valve box opening. Valves shall be set in a plumb position with 24-inch minimum maintenance clearance from other equipment.

B. Install at sufficient depth to provide more than 6-inch, nor less than 4-inch cover from top of valve to finish grade.

C. Adjust zone valve operation after installation using flow control device on valve.

3.8 WIRING INSTALLATION

A. Wiring shall be installed along with the mainline. Multiple wire bundles shall be cinched together at maximum 12-foot centers using plastic cable cinches and shall be laid beside, and at the same invert as, the irrigation lines. Sufficient slack for expansion and contraction shall be maintained and wiring shall at no point be installed tightly. Provide and install an additional 8 inches to 12 inches slack at all

changes of direction. Wiring in valve boxes shall be a sufficient length to allow the valve solenoid, decoder, splice, and all connections to be brought above grade for servicing. This additional slack shall be coiled for neatness in the valve box. Each valve shall have a separate wire back to the controller.

B. All wire shall be laid in trenches and shall be carefully back-filled to avoid \ damage to the wire insulation or wire conductors themselves. In areas of unsuitable material, the trench shall have a 2 inches layer of sand or stone dust on the bottom before the wires are laid into the trench and back-filled. The wires shall have a minimum of 22 inches of cover (See detail). Wire not to be installed that day shall not be laid out.

C. An expansion curl shall be provided and installed within 6 inches of each wire connection to a solenoid. Expansion curls can be formed by wrapping five (5) turns of wire around a 1-inch diameter or larger pipe and then withdrawing the pipe.

D. Service wiring in connection with drawings and local codes for low voltage service. All in-ground wire connections shall be waterproofed with 3M DBR/Y-6 splice kits. All splices shall be made in valve boxes (wire runs requiring splices between valve locations shall be provided and installed in splice box-valve box shall be used). Splice locations shall be shown on the record drawings.

E. Provide a complete wiring diagram showing wire routing for the connections between the controller, decoder, and valves. See section one for the inclusion of wiring diagram in operation and maintenance manuals.

3.9 CONTROLLER INSTALLATION

A. Install controllers in enclosures as indicated in the drawings, per detail. Wire communication cable and rain sensor into controller and set proper program.

B. Wire controller to electrical supply furnished and installed to the controller locations.

C. Keys shall be turned over to Owner's Representative.

3.10 CONTROLLER GROUNDING INSTALLATION

A. Each grounding rod shall be driven into the ground its full length 12-feet from the controller and connected via a Cadweld or approved equal connection to #6 solid, bare copper wire. The copper wire is to be installed in as straight a line as possible, and if it is necessary to make a turn or bend, it shall be done in a sweeping curve with a minimum radius of 8 inches and a minimum included angle of 90 degrees. There shall be no splices in the bare copper wire. The top of the ground rod shall be driven below the ground surface. A 4-inch grated cover as specified, set a minimum of 1-inch below grade, shall be placed over the ground rod and Cadweld or approved equal connection for periodic maintenance. Cover shall be installed on a minimum of 6 inches of 4-inch ADS corrugated polyethylene, perforated drainage pipe. Plates shall be installed 36 inches below grade with 50 lbs of Power Set or approved equal ground enhancement material spread evenly below the plate and 50 lbs of Power Set or approved equal ground enhancement material

spread evenly above the plate in accordance with the manufacturer's requirements. Plates shall also be covered with a 4 inch grated cover as specified, set a minimum of 1-inch below grade, to facilitate drainage onto the plate. Cover shall be installed on a minimum of 36 inches of 4-inch ADS or approved equal corrugated polyethylene, perforated drainage pipe.

B. Multiple controller locations shall have separate grounding for each controller.

C. When tested, grounding grid shall have an earth resistance no greater than 10 ohms. If earth resistance is greater than 10 ohms, additional grounding rods and/or plates and enhancement material shall be added to system until desired test results have been meet. The minimum requirements of the NEC shall be met, which are:

1. a resistance reading of no more than 25 ohms or

2. a two electrode ground grid.

3.11 DECODER GROUNDING INSTALLATION

A. Lightning arrestor shall be installed per manufacture's recommendations and instructions.

B. Each surge decoder shall be grounded to one rod and plate. Plate shall be installed at a 36-inch depth with 50 lbs of non-migrating ground enhancement material or approved equal spread evenly below the plate and evenly above the plate. The grounding electrode shall be installed at least 10 feet from wires connected to the surge arrestor.

C. Each surge arrestor shall have a separate ground.

D. The grounding rod shall be driven into the ground its full length minimum 10-feet from the surge arrestor and connected via a fusion type connector or approved equal connection to #10 solid, bare copper wire. The copper wire is to be installed in as straight a line as possible, and if it is necessary to make a turn or bend, it shall be done in a sweeping curve with a minimum radius of 8 inches and a minimum included angle of 90 degrees. There shall be no splices in the bare copper wire. The top of the ground rod shall be driven below the ground surface. A 4-inch grated cover as specified, set a minimum of 1-inch below grade, shall be placed over the ground rod and fusion type connector or approved equal connection for periodic maintenance. Cover shall be installed on a minimum of 6 inches of 4-inch corrugated polyethylene, perforated drainage pipe.

E. Grounding plate shall be installed 36 inches below grade with 50 lbs of ground enhancement, non-migrating, or approved equal ground enhancement material spread evenly below the plate and evenly above the plate in accordance with the manufacturer's requirements. Plate shall also be covered with a 4 inch grated cover as specified, set a minimum of 1-inch below grade, to facilitate drainage onto the plate. Cover shall be installed on a minimum of 36 inches of 4-inch or approved equal corrugated polyethylene, perforated drainage pipe.

F. When tested, grounding grid shall have an earth resistance no greater than 10 ohms from any electrical device or wire to earth ground. If earth resistance is greater than 10 ohms, additional grounding rods and/or plates and enhancement material shall be added to system until desired test results have been meet.

G. Grates shall be set a minimum of 10 feet below grade.

3.12 RAIN SENSOR INSTALLATION

A. Install rain sensor on controller enclosure. Rain sensor shall be in direct contact with the weather and not in contact with the irrigation spray.

B. Install rain sensor receiver adjacent to controller and wire to controller for 24 volt power required from controller.

3.13 SPRINKLER INSTALLATION

A. Spray sprinklers shall be installed flush (perpendicular) to grade on swing pipe assemblies, minimum length 6 inches, maximum 18 inches.

B. Small and medium rotary sprinklers shall be installed flush to grade on 3/4-inch prefabricated PVC unitized swing joint assemblies with integral O-rings, minimum length 12 inches.

C. Large rotary sprinklers shall be installed flush to grade on 1-inch prefabricated PVC unitized swing joint assemblies with integral O-rings, minimum length 12 inches.

D. Sprinklers shall not exceed maximum spacing indicated

E. Adjust sprinkler zone after installation using flow control device on valve.

3.14 QUICK COUPLING VALVE INSTALLATION

A. Provide and install quick coupling valves where indicated on the drawings.

B. Quick coupling valves to be mounted on 1-inch prefabricated PVC unitized swing joint assemblies with integral O-rings, minimum length 12 inches with brass insert and stabilizer as per details.

3.15 BACKFLOW PREVENTION INSTALLATION

A. Install educed pressure back flow prevention assemblies in above grade enclosure as specified. Back flow installation shall be in accordance with Framingham Cross Connection Department.

3.16 BACK FLOW / CONTROLLER ENCLOSURE INSTALLATION

A. Install enclosures on reinforced concrete pads as indicated on the detail, generally where indicated on the drawings. Final location of enclosures shall be coordinated with the Owner's Representative as to best screen the enclosure and deter

vandalism. Final location shall also be coordinated with utility department to ensure proper placement of water supply line.

B. Concrete pad for back flow enclosure shall be as shown on the drawings and as necessary to accommodate the final approved enclosure with a minimum of 4” of concrete around the enclosure.

C. Concrete pad for controller enclosure shall be 24 inches long by 24 inches wide by 6 inches deep.

D. Sleeves shall be installed in the concrete form prior to the concrete pour to accommodate incoming and outgoing pipes.

E. Install one (1) 1-inch sweep elbow (power), one (1) 1-1/2-inch sweep elbow (ground), and one (1) 3-inch sweep elbow (field wiring) through concrete pad into controller enclosure as per detail.

3.17 CHECK/TEST/START-UP/ADJUST

A. Flushing:

1. After all piping, valves, sprinkler bodies, pipelines and risers are in place and connected, but prior to installation of sprinkler internals open the control valves and flush out the system under a full head of water.

2. Sprinkler internals and nozzles shall be installed only after flushing of the system has been accomplished to the full satisfaction of the Owner’s Representative.

3. Flush the entire system after installation is complete and service clogged nozzles for thirty (30) days after substantial completion of this portion of the landscape irrigation system.

B. Testing:

1. Leakage test: test all lines for leaks under operating pressure. Repair all leaks and re-test.

2. Coverage test: perform a coverage test in the presence of the Owner's Representative (notify Owner’s Representative at least seven (7) days in advance of scheduled coverage test). Representative will determine if the water coverage is complete and adequate. Readjust sprinklers and/or sprinkler locations as necessary or directed to achieve proper coverage.

3. All testing shall be at no additional expense to the Owner.

3.18 CLEANING AND ADJUSTING

A. At the completion of the work, all parts of the installation shall be thoroughly cleaned. All equipment, pipe, valves and fittings shall be cleaned of grease, metal

cuttings and sludge which may have accumulated by the operation of the system for testing.

B. Adjust sprinklers, valve boxes, and quick coupling valves to grade as required, so that they will not be damaged by mowing operations.

C. Continue sprinkler coverage adjustment as required by settlement, etc., throughout the guarantee period.

D. Each control zone shall be operated for a minimum of 5 minutes and all sprinklers checked for consistency of delivering water. Adjustments shall be made to sprinklers that are not consistent to the point that they match the manufacturer's standards. All sprinklers, valves, timing devices, or other mechanical or electrical components, which fail to meet these standards, shall be rejected, replaced and tested until they meet the manufacturer's standards.

3.19 ACCEPTANCE AND OPERATION BY OWNER

A. Upon completion of the work and acceptance by the Owner, train the Owner's Personnel in the operation of the system (provide minimum 7 day written notice in advance of test). Furnish, in addition to the record drawings and operational manuals, copies of all available specification sheets and catalog sheets to the Owner's personnel responsible for the operation of the irrigation system. Guarantee all parts and labor for a minimum period of one (1) year from date of acceptance.

3.20 CLEAN UP

A. Upon completion of all installation work remove all leftover materials and equipment from the site in a safe and legal manner.

B. Remove all debris resulting from work of this section.

C. Regrade, lightly compact, and replant around sprinklers where necessary to maintain proper vertical positioning in relation to established grade.

D. Fill all depressions and eroded channels with sufficient soil mix to adjust grade to ensure proper drainage. Compact lightly, and replant filled areas in accord with drawings requirements.

End of Section

Section 32 90 00
PLANTING

PART 1 - GENERAL

1.1 GENERAL REQUIREMENTS

A. The conditions and general requirements of the Contract, Division 0 and applicable parts of Division 1, apply to the work under this Section.

B. All references to products by manufacturer, trade name or performance Specifications bearing the connotation "or Approved Equal" shall be as determined by the Landscape Architect and the City, per MGL c. 30 s. 39M, part b, criteria 1.

C. Contractor shall comply with all laws, regulations, and quarantines for agricultural and horticultural products.

1.2 WORK INCLUDED

A. The work of this Section consists of the provision of all materials, labor, equipment and the like for the complete execution of all lawn establishment by sodding and related items as indicated on the Drawings and/or as specified herein.

B. Work includes but is not limited to the following:

1. Topsoil (loam borrow), fine grading and loaming;
2. Plant Materials;
3. Soil additives;
4. Mulch;
5. Hydro-seeded Lawns, including athletic fields;
6. Sod;
7. Meadow Grass Seed Mix;
8. Detention Basin Seed Mix;
9. Erosion Control Fabric;
10. Maintenance, watering, and protection of plantings and lawns until final acceptance.

1.3 SPECIAL CONDITIONS

A. No burning will be permitted on the project site.

B. Prior to commencing work, the Contractor shall submit a plan for legal disposal of removed materials, acceptable to the Owner.

1.4 REFERENCES

A. Examine all other Sections of the Specifications and all Drawings for the relationship of the work under this Section and the work of other trades. Cooperate with all other trades and all departments of the City and coordinate all work under this Section therewith.

B. Related items include but are not limited to work under the Sections listed below:

1. Section 02 41 17 – Building Demolition
2. Section 31 00 00 – Earth Moving
3. Section 31 20 00 – Earthwork

1.5 SUBMITTALS

A. Prior to ordering the below listed materials, submit representative samples to Landscape Architect for selection and approval, in accordance with requirements of General Condition and special provisions as follows. Do not order material until Landscape Architect's approval has been obtained. Delivered materials shall closely match the approved samples.

1. Topsoil: The Contractor shall provide a one (1) cubic foot representative sample from each proposed source for testing and approval as directed by the Landscape Architect. The Contractor shall deliver samples to testing laboratory prior to any spreading of topsoil and shall have the testing report sent directly to the Landscape Architect, and pay all costs.

a. Mechanical and chemical (pH soluble salts) analysis shall be by public extension service agency or a certified private testing laboratory in accordance with the current standards of the Association of Official Agricultural Chemists.

b. Report shall be submitted at least one (1) month before any lloam is to be spread. Soil tests shall be for Nitrate Nitrogen, Ammonium Nitrogen, Phosphorus, Potassium, Calcium, Aluminum, Soluble Salts, and Lead, and show acidity and USDA classification of the soil and percent gravel.

2. Submit a written guarantee of conformance to specifications for sod.
3. Submit material specifications and installation instructions where applicable attesting that soil additives meet the requirements specified.

1.6 DEFINITIONS

A. The following related items are included herein and shall mean:

1. S.S.H.B.: The Commonwealth of Massachusetts, Department of Public Works, Standard Specifications for Highways and Bridges, latest edition.
2. A.O.A.C.: Association of Official Agricultural Chemists
3. A.A.N.: American Association of Nurserymen

1.7 PRODUCT DELIVERY AND HANDLING

A. All topsoil, whether from stockpiles on site or loam borrow, shall be stored in piles not to exceed six feet in height, and shall not be handled when frozen or not in a friable condition.

1.8 CERTIFICATION OF ACCEPTANCE AND GUARANTEE

A. The Contractor shall be responsible for maintenance until the LATER of: the acceptance of the entire project as substantially complete, or 90 days after installation and acceptance of plantings, including lawns. After the minimum ninety (90) day maintenance period and substantial completion of the project, the Contractor shall request of the Landscape Architect, in writing, an inspection to determine whether the lawns and plantings are acceptable. If the plant material and workmanship are acceptable, written notice will be given by the Landscape Architect to the Contractor stating that the guarantee period begins from the date of the Certificate of Acceptance. Acceptance shall be given only for the entire lawn area covered by the Contract, and for all plantings.

B. Lawns shall exhibit a uniform, thick, well-developed stand of grass, which has received a minimum of three cuttings. Lawn areas shall have no bare spots in excess of four inches in diameter, and bare spots shall comprise no more than two percent of the total area of the lawn. No lawn areas shall exhibit signs of damage from erosion, washouts, gullies, or other causes.

C. Lawns, shrubs, trees, and perennials shall be guaranteed for a period of one calendar year after inspection and acceptance and shall be alive and in satisfactory growth at the end of the guarantee period.

D. At the end of the guarantee period, inspection will be made again. Any lawn area or planting covered under this contract that is dead or unsatisfactory shall be replaced according to the planting seasons called for herein, until the lawn or planting lives through one guarantee period. A final inspection for acceptance will be made after the replacement plantings have lived through one guarantee period. Contractor shall test soil and add fertilizer and lime as needed in the fall after installation.

E. All replacements shall be the same turf mix (sod), seed mix (meadow mix, detention basin mix, and seeded lawns, and sports fields) or species and cultivar (plantings) as originally installed and accepted. The cost shall be borne by the Contractor.

1.9 SITE CONDITIONS

A. All areas to be planted shall be inspected by the Contractor before starting work and any defects such as incorrect grading, etc., shall be reported to the Landscape Architect prior to beginning this work. The commencement of work by the Contractor shall indicate his acceptance of the areas to be planted and he shall assume full responsibility.

B. Environmental Requirements: Contractor shall not work on or with soils when they are dry, wet, or frozen. Field Test: Form soil in palm of hand; if soil retains shape and crumbles upon touching, then it may be worked (if it will not retain its shape, it is too dry; if it does not crumble, it is too wet). Landscape Architect shall be final authority on condition of soil.

1.10 PROTECTION

A. The Contractor shall be liable for any damage to property caused by the work, and all areas disturbed shall be returned to their original condition to the satisfaction of the Landscape Architect. During all work of this section, the Contractor shall protect all site improvements from contact with agricultural chemicals, soil amendments, and fertilizers.

B. The Contractor shall provide all erosion, sedimentation, and environmental controls necessitated by site and governing codes.

C. Damage no plant to remain by burning, by pumping of water, by cutting of live roots or branches, or by any other means. No plant to be saved shall be used for crane stays, guys, or their fastenings. Vehicles shall not be parked within the dripline of trees to remain, or wherever damage may result to trees to be saved. Construction material shall not be stored beneath trees to be saved. See Drawings for Tree Protection.

PART 2 - PRODUCT

2.1 TOPSOIL/LOAM

A. Loam shall be a "fine sandy loam" or a "sandy loam" determined by mechanical analysis and based on the USDA classification system. It shall be of uniform composition, without admixture of subsoil. It shall be free of stones greater than one inch, lumps, plants and their roots, debris and other extraneous matter over one inch in diameter or excess of smaller pieces of the same materials as determined by the Landscape Architect. It shall not contain toxic substances harmful to plant growth. Loam shall contain not less than 4% nor more than 10% organic matter as determined by the loss on ignition of oven-dried samples. Test samples shall be oven-dried to a constant weight at a temperature of 230 F, plus or minus 9.

B. Loam shall have an acidity range of pH 5.6 to pH 6.5.

C. The amount of either sulfur or limestone required to adjust the planting loam to the proper pH range (above) shall be determined by the Landscape Architect on the basis of soil tests as specified herein.

D. Soil tests for this area shall be through the University of Massachusetts Amherst Cooperative Extension Soil Testing Laboratory, with recommendations for both Grasses/Lawns and Trees/Shrubs, or Approved Equal testing service (submit proposed alternative before testing).

2.2 PLANT MATERIALS

A. The Contractor shall furnish and plant all plants shown on the Drawings, as specified, and in quantities listed on the Plant List. No substitutions will be permitted. All plants shall be nursery-grown unless specifically authorized to be collected.

B. Plants shall be in accordance with the USA Standard for Nursery Stock of the American Association of Nurserymen, latest edition.

C. All plants shall be typical of their species or variety and shall have a normal habit of growth and be legibly tagged with the proper name. Only plant stock grown within the hardiness Zones 1 through 6, as established by the United States Department of Agriculture, will be accepted. The Contractor's suppliers must certify in writing that the stock has actually been grown under Zone 6 or hardier conditions for a minimum of 2 years. Plants not so certified will not be accepted.

D. The root system of each shall be well provided with fibrous roots. All parts shall be moist and show active green cambium when cut. They shall be sound, healthy, and vigorous, well-branched and densely foliated when in leaf. They shall be free of disease, insect pests, eggs or larvae.

E. All plants must be moved with the root systems as solid units with balls of earth firmly wrapped with untreated eight (8) ounce burlap, firmly held in place by a stout cord or wire. The diameter and depth of the balls of earth must be sufficient to encompass the fibrous and root feeding system necessary for the healthy development of the plant. No plant shall be accepted when the ball of earth surrounding its roots has been badly cracked or broken preparatory to or during the process of planting or after the burlap, staves, ropes or platform required in connection with its transplanting have been removed. The plants and balls shall remain intact during all operations. All plants that cannot be planted at once must be heeled in by setting in the ground and covering the balls with soil and then watering them.

F. The caliper of the trees shall be not less than the minimum size designated. Take caliper measurement six inches (6") above ground level up to and including four (4") caliper size and twelve inches (12") above ground for larger sizes. The trunk of each tree shall be a single trunk growing from a single unmutilated crown of roots. No part of the trunk shall be conspicuously crooked as compared with normal trees of the same variety. The trunk shall be free from sunscald, frost cracks, or wounds resulting from abrasions, fire or other causes. No pruning wounds shall be present having a diameter exceeding two inches (2") and such wounds must show vigorous bark on all edges. Plants shall not be pruned prior to delivery.

G. Plants delivered by truck and plants requiring storage on site shall be properly wrapped and covered to prevent wind-drying and desiccation of branches, leaves or buds; plant balls should be firmly bound, unbroken, reasonably moist to indicate watering prior to delivery and during storage and tree trunks should be free from fresh scars and damage in handling. No trees with double-leaders or twin-heads shall be acceptable without the written approval of the Landscape Architect. The Contractor shall reject such plants at time of delivery by the nursery/supplier unless such plants were selected by the Landscape Architect as indicated by tags and seals. No plant material from cold storage will be accepted.

2.3 SOIL ADDITIVES

A. Commercial fertilizer, manufactured compost, peat, humus or other additives shall be used to counteract soil deficiencies as recommended by the soil analysis and as directed by the Landscape Architect.

1. Commercial fertilizer shall be a product complying with the State and United States Fertilizer Laws. Deliver to the site in the original unopened containers that shall bear the manufacturer's Certificate of Compliance covering analysis which shall be furnished to the Landscape Architect. At least 50% by weight of the Nitrogen content shall be derived from organic materials. Fertilizer shall contain not less than the percentages of weight of ingredients as follows or as recommended by the soil analysis:

	Nitrogen	Phosphorus	Potash
For All Plants	10%	10%	10%

2. Fertilizer plan, including schedule and specific mix, must be submitted and approved by the Landscape Architect and the Owner's Representative.

B. Ground dolomite limestone shall be an approved agricultural limestone containing not less than 85% of total calcium or magnesium carbonates. Limestone shall be ground to such fineness that 50% will pass through a 100 mesh sieve and 90% will pass through a 20 mesh sieve.

C. Humus shall be natural humus, reed peat or sedge peat. It shall be free from excessive amounts of zinc, low in wood content, free from hard lumps and in a shredded or granular form. According to the methods of testing of A.O.A.C., latest edition, the acidity range shall be approximately 5.5 pH to 7.6 pH and the organic matter shall be not less than 85% as determined by loss on ignition. The minimum water absorbing ability shall be 200% by weight on an oven-dry basis.

D. Peat moss shall be composed of the partly decomposed stems and leaves of any or several species of sphagnum moss. It shall be free from wood, decomposed colloidal residue and other foreign matter. It shall have an acidity range of 3.5 pH to 5.5 pH as determined in accordance with the methods of testing of A.O.A.C., latest edition. Its water absorbing ability shall be a minimum of 1,100% by weight on an oven-dry basis. Manufactured Compost of comparable qualities will be accepted in lieu of peat moss.

E. Superphosphate: Superphosphate shall be composed of finely ground phosphate rock as commonly used for agricultural purposes containing not less than 18% available phosphoric acid.

F. Water retention gel shall be used where appropriate. Mix with soil per manufacturer's directions.

2.4 BARK MULCH

A. Mulch shall be pine bark aged a minimum of six (6) months. The mulch shall be dark brown in color, free of chunks and pieces of wood thicker than one-quarter inch (1/4"). Mulch must be free of stringy material over three inches (3") in length and shall not contain, in the judgment of the Landscape Architect, an excess of fine particles. Mulch shall be 98% organic matter with the pH range of 3.5 to 4.5. Moisture content of packaged material shall not exceed 35%. Submit sample for the Landscape Architect's approval.

B. Dyed mulch will not be approved.

2.5 LAWN SEED MIX

A. Seed Mix shall be “Black Beauty Ultra” by Jonathan Green Co. of Reading, PA or Approved Equal low-fertilizer-requirement mix designed to minimize need for irrigation.

B. Grass seed for lawn areas shall be fresh, clean, dry, new crop seed, which meets the standard of the Federal Seed Act. Seed shall be mixed in proportion by weight and testing the minimum percentages of purity and germination. Seed shall be nursery grown seed composed of grasses grown from the following seed mixtures.

Lawn Areas:

Approx % by Wt.	Common Name of Grass	% Germination
70	Tall Fescues	92
20	Perennial Ryegrass	92
10	Kentucky Bluegrass	85

C. Weed seed shall not exceed 0.1% by weight. Tall Fescue shall be a mix of “Tonto,” “Montana,” “Dorado,” or similar cultivar tall fescues. Bluegrass shall be “Madison,” “Deepblue,” “Prosperity,” or similar cultivar Kentucky bluegrass. Perennial Rye shall be “Frontier,” “Singular,” or similar cultivar Perennial Ryegrass.

2.6 SPORTS FIELD MIX

A. Seed Mix shall be “Blue Panther Kentucky Bluegrass Seed Mix” by Jonathan Green Co. of Reading, PA, or Approved Equal, designed for sports applications.

B. Grass seed for sports field areas shall be fresh, clean, dry, new crop seed, which meets the standard of the Federal Seed Act. Seed shall be mixed in proportion by weight and testing the minimum percentages of purity and germination. Seed shall be nursery grown seed composed of grasses grown from the following seed mixtures.

C. Weed seed shall not exceed 0.1% by weight.

2.7 SOD MIX

A. Sod shall be nursery grown sod composed of grasses grown from the following seed mixtures.

% by Weight	Common Name of Grass
70	Tall Fescue
20	Kentucky Bluegrass
10	Perennial Ryegrass

B. The sod shall be “Black Beauty Turf Type Fescue” grown by Sodco, Inc. of Slocum, Rhode Island, or other approved New England source; submit proposed sod specifications and source for approval.

C. Weed seed shall not exceed 0.1% by weight. Tall fescue shall be a mix of “Golconda”, “Montana”, “Dorado”, or similar cultivar tall fescues. Bluegrass shall be a mix of “Deepblue,” “Prosperity,” or similar cultivar Kentucky bluegrass. Perennial Rye shall be a mix of “Frontier,” “Singular,” or similar cultivar Perennial Ryegrass.

D. Sod shall be machine cut at a uniform soil thickness of ¾ inch, plus or minus ¼ inch, at the time of cutting. Measurement for thickness shall exclude top growth and thatch. Individual pieces of sod shall be cut to the supplier's standard width and length for large roll sod. Maximum allowable deviation from standard widths and length shall be 5%. Broken pads and torn or uneven ends will not be acceptable. Sod shall be at least one (1) year old from time of original seeding.

E. Sod shall be furnished in large rolls of the following dimensions:

1. Sod rolls are to be 4' wide by 62½' long, each roll is to total 250 square feet.
2. The sod handler is to be 8'-6" wide and 11'-6" high.

F. Sod shall be harvested, delivered and installed within a period of 36 hours. Sod not transplanted within this period shall be inspected and approved by the Landscape Architect prior to its installation. Soil on sod pads shall be kept moist at all times.

G. If delivered in multiple shipments, the sods shall match one another in texture and consistency, in the judgment of the Landscape Architect.

2.8 MEADOW GRASS SEED MIX

A. Seed for meadow grass areas shall be fresh, clean, dry, new crop seed, which meets the standard of the Federal Seed Act. Seed shall be mixed in proportion by weight and testing the minimum percentages of purity and germination. Seed shall be nursery grown seed composed of grasses grown from the following species (or similar mix as approved by Landscape Architect):

Botanical Name	Common Name
Schizachyrium scoparium	Little Bluestem
Festuca rubra	Red Fescue
Sorghastrum nutans	Indian Grass
Chamaecrista fasciculata	Partridge Pea
Elymus canadensis	Canada Wild Rye
Elymus virginicus	Virginia Wild Rye
Verbena hastata	Blue Vervain
Asclepias tuberosa	Butterfly Milkweed
Sisyrinchium angustifolium	Narrowleafed Blue Eyed Grass
Rudbeckia hirta	Black Eyed Susan
Aster lateriflorus	Starved/Calico Aster
Aster novae-angliae	New England Aster
Eupatorium fistulosum	Hollow Stem Joe Pye Weed
Liatris spicata	Spiked Gayfeather
Solidago juncea	Early Goldenrod

B. Weed seed shall not exceed 0.5% by weight.

C. Seed mix shall be: New England Wildflower Seed Mix by New England Wetland Plants Inc. Amherst, MA (ph: 1.413.548.8000), or Approved Equal.

2.9 DETENTION BASIN SEED MIX

A. Seed for detention basin areas shall be, clean, dry, new crop seed, which meets the standard of the Federal Seed Act. Seed shall be mixed in proportion by weight and testing the minimum percentages of purity and germination. Seed shall be nursery grown seed composed of grasses grown from the following species (or similar mix as approved by Landscape Architect):

Botanical Name	Common Name
Elymus riparius	Riverbank Wild Rye
Festuca rubra	Creeping Red Fescue
Schizachyrium scoparium	Little Bluestem
Andropogon gerardii	Big Bluestem
Panicum virgatum	Switch Grass
Agrostis perennans	Upland Bentgrass
Bidens cernua	Nodding Bur Marigold
Eupatorium fistulosum	Hollow-Stem Joe Pye Weed
Aster novae-angliae	New England Aster
Eupatorium perfoliatum	Boneset
Verbena hastata	Blue Vervian
Juncus effusus	Soft Rush
Scirpus cyperinus	Wool Grass

B. Weed seed shall not exceed 0.5% by weight.

C. Seed mix shall be: New England Erosion Control/Restoration Mix for Detention Basins and Moist Sites by New England Wetland Plants Inc. Amherst, MA (ph: 1.413.548.8000), or Approved Equal.

2.10 EROSION CONTROL MAT

A. Erosion Control Mat to be a Single Net Straw Biodegradable Rolled Erosion Control Product.

B. Erosion control mat to be made of uniformly distributed 100% agricultural straw and one organic jute net securely sewn together with biodegradable. Net opening to be .5"x.1".

C. The erosion control fabric to have a functional longevity of approximately 12 months. The erosion control fabric to meet Type 2.C specification requirements established by the Erosion Control Technology Council (ECTC) and Federal Highway Administration's (FHWA) FP-03 Section 713.17

D. Erosion control fabric to come in 2 sizes. Standard to be 8' wide by 112.5' long, Mega to be 16' wide by 112.5' long.

2.11 INSECTICIDE

A. No insecticide shall be used except as specifically approved in writing by the Landscape Architect and the Owner’s Representative.

2.12 WATER

A. The Contractor shall be responsible to furnish his/her own supply of water to the site at no extra cost.

B. All work injured or damaged due to the lack of water, or the use of too much water, shall be the Contractor's responsibility to correct. Water shall be free from impurities injurious to vegetation.

C. All new trees shall be furnished with a Portable Drip Irrigation System (PDIS) water bags. PDIS water bags shall be UV-treated, reinforced polyethylene bags with a nylon toothed zipper extending from top to bottom of bag, capable of holding a minimum of 20 gallons of water, constructed so that they can be attached to the trees, which provide water from a minimum of three drip points.

PART 3 - EXECUTION

3.1 FINE GRADING AND LOAM

A. After the areas to be loamed have been brought to subgrade, and immediately prior to dumping and spreading the loam, the subgrade shall be loosened by disking or rototilling to a depth of at least three inches (3") to permit bonding of the loam to the subsoil. Remove all stones greater than two inches (2") and all debris or rubbish. Such material shall be removed from the site.

B. Loam shall be placed and spread over approved areas to a depth sufficiently greater than twelve inches (12") in all plant beds, six inches (6”) for all lawn areas, and twelve inches (12”) for all sports fields, so that after natural settlement and light rolling, the completed work will conform to the lines, grading and elevations indicated. Supply additional loam, after testing and approval, as may be needed to give the specified depths and finished grades under the contract without additional cost to the Owner.

C. No subsoil or loam shall be handled in any way if it is in a wet, dry, or frozen condition.

D. Sufficient grade stakes shall be set for checking the finished grades. Grades shall be established which are accurate to one-tenth (1/10th) of a foot either way. Connect contours and spot elevations with an even slope.

E. After lime, fertilizer, and humus if required have been spread and incorporated into the bed, it shall be carefully prepared by scarifying or harrowing and hand raking. All large stiff clods, lumps, brush, roots, stumps, litter and other foreign matter, and stones over one inch (1") in diameter shall be removed from the loam. Loam shall also be free of smaller stones in excessive quantities as determined by the Landscape Architect.

F. The whole surface shall then be rolled with a hand roller weighing not more than 100 lbs. per foot of width. During the rolling, all depressions caused by settlement or rolling shall be filled with additional loam and the surface shall be regraded and rolled until presenting a smooth and even finish to the required grade. The finish grades shall be inspected by the Landscape Architect for approval before final acceptance.

3.2 PLANTING

A. Furnishing and planting of any plant material includes the digging of the holes, provision of soil additives and loam, furnishing the plants of specified size with

roots in the specified manner, the labor of planting and mulching and guying and staking where called for.

B. Season for Planting

1. Spring:

   a. Deciduous materials: March 21 through May 15

   b. Evergreen materials: April 15 through June 1

2. Fall:

   a. Deciduous materials: October 1 through December 1

   b. Evergreen materials: August 15 through October 15

C. Planting

1. Location for all plants and outlines for planting areas shall be staked on the ground by the Contractor for approval by the Landscape Architect before any plant pits or plant beds are dug.

2. At least fifteen (15) days prior to the expected planting date, the Contractor shall request that the Landscape Architect provide a representative to select and tag stock to be planted under this Section. The Contractor shall provide for the transportation and overnight accommodations, if necessary, for the Landscape Architect's representative during the period of time required to select and tag the plant material, at no extra cost to the Owner.

3. Plants shall be selected by the Landscape Architect at the place of growth for conformity to specification requirements as to quality, size, and variety. Such approval shall not impair the right of inspection and rejection upon delivery at the site or during the progress of the work. Cost of replacement shall be borne by the Contractor.

4. Plant pits shall be circular pits with sloping sides, except for plants specifically indicated to be planted in beds. Holes for trees and shrubs shall be at least two feet (2') greater in diameter than the ball, and shall be at least three (3) times the diameter of the ball for trees where space allows, and shall be of a depth that maintains the plant’s prior relation to finish grade. Bottom of pit shall be flat or deepest at the perimeter. If pit is dug deeper than required to maintain plant’s relation to finish grade, then soil replaced under root ball shall be compacted to prevent subsequent settling of tree or shrub. If soil at bottom of pit is impermeable or poorly drained, pit shall be dug one extra foot, backfilled with planting soil mix, and compacted before installing plant.

5. After excavation, fill pit twice successively with water. If water does not drain out of pit at a minimum of two inches per hour, provisions for drainage must be made. Contractor shall document drainage test results for review by Landscape Architect.

6. Topsoil, organic material and fertilizer mix for planting soil mix shall be thoroughly premixed in the proportions of one (1) part of organic material with four (4) parts of topsoil together with fertilizer at the rate determined by soil test. The organic material to be added shall be as directed by the

Landscape Architect. One part of existing soil shall be mixed with two parts of planting soil mix for use in back filling around root ball. Maintain at all times during the planting operations one or more stockpiles of approved planting soil mix.

7. Install slow release fertilizer packets per manufacturers' directions with each newly planted tree.

8. All plant roots and earth balls must be damp and thoroughly protected from sun and wind from the beginning of the digging operation, during transportation and on the ground until the final planting. The plants shall be planted in the center of the holes and at the same depth as they previously grew (see a. below). Set plants upright, plumb, and faced to give the best appearance or relationship to each other or adjacent structures. Remove burlap, rope, wires, etc., from the sides and tops of root balls. Do not pull burlap out from under root balls. Any girdling roots or badly damaged roots must be cleanly pruned off. Planting soil mix shall be backfilled in layers of not more than six inches (6") and each layer watered sufficiently to settle before the next layer is put in place. Enough planting soil mix shall be used to bring the surface to finish grade when settled. A saucer shall be formed around each plant at a depth of six inches (6") for trees.

   a. The Root Flare of each plant shall be located at the finish grade and visible. All planting depths shall be inspected by the Landscape Architect and the Owner's Representative, and if not at the proper depth shall be corrected at the Contractor's expense.

D. All plants shall be flooded with water twice within the first 24 hours of the time of planting and all plants during the maintenance period shall be watered at least twice each week. At each watering the soil around each plant shall be thoroughly saturated. If sufficient moisture is retained in the soil, as determined by the Landscape Architect, the required watering may be reduced. Trees will require a minimum of ten (10) gallons of water each.

E. Mulch material shall be placed over entire saucer areas of individual trees and over the entire area of planting beds to a depth of three inches (3") after settlement, not later than one (1) week after planting. No mulch shall be applied prior to the first watering of plant materials. Mulch shall be pulled back two inches (2") from tree trunks.

F. Portable Drip Irrigation System watering bags shall be installed as directed by the bag manufacturer, and shall be kept filled as necessary to maintain optimum health.

G. Antidesiccant shall be applied to all plants before digging at the nursery and/or as directed by the Landscape Architect once the plants have been delivered to the site.

H. Antidesiccant shall be applied to all evergreen plants in the late fall as directed by the Landscape Architect.

I. If planting is done after lawn preparation or installation proper protection of lawn areas shall be provided and any damage resulting from planting operations shall be repaired immediately at no cost to the Owner.

J. In the event that rock or underground construction work or obstructions are encountered in any plant pit or bed excavation work to be done under this Contract, alternate locations may be selected by the Landscape Architect.

K. Absolutely no debris may be left on the site. Excavated material shall be removed as directed by the Landscape Architect. Repair any damage to site or structures to restore them to their original condition as directed by the Landscape Architect, at no cost to the Owner.

3.3 SOIL ADDITIVES

A. Follow all recommendations for soil additives as determined by an approved Soil Testing Laboratory, and all manufacturers' instructions pertaining to additives.

3.4 BARK MULCH

A. Contractor shall install approved bark mulch material to the limits and depths shown on the Drawings and specified herein.

3.5 HYDROSEEDING

A. Limit of seeding shall be shown on the Drawings. All areas on the plan shall be loamed and seeded only after written approval of the finished grading or as directed by the Landscape Architect. All seeded areas are to be hydroseeded.

The actual planting of seed shall be done, however, only during periods within this season which are normal for such work as determined by weather conditions and be accepted practice in this locality. At his/her option and on his/her responsibility the Contractor may plant seed under unseasonable conditions without additional compensation, but subject to the Architect's approval as to time and methods.

B. Planting may be done between August 15 and October 15, or between April 15 and June 15.

C. Soil additives shall be spread and thoroughly incorporated into the later of loam and the upper 1 inch of the underlying subsoil by harrowing or other methods approved by the Architect. The following soil additives shall be incorporated:

1. Ground limestone as required by soil analysis to achieve a pH of 6.0 to 6.5.
2. Fertilizer as required by soil analysis.
3. Superphosphate at the rate of 20 lbs. Per 1,000 square feet.
4. Humus as required by soil analysis.
5. Compost at a rate of 1 part compost per 4 parts planting loam.

D. Seeding of lawns shall be done only by experienced workmen under the supervision of qualified foreman. Seeding shall consist of soil preparation, rolling, hydroseeding, weeding, fertilizing, watering and otherwise providing all labor and materials necessary to secure the establishment of acceptable turf.

E. The soil on which the seed is spread shall be reasonably moist and shall be watered, if directed by the Architect. The seeded areas shall be watered evenly and at a rate of 5 gallons per square yard, unless otherwise directed by the Architect.

F. Contractor shall place and maintain barriers (in a neat condition) around hydroseeded areas to keep people off during the first sixty (60) days.

G. The actual seeding of lawns shall be done only during periods within the season which are normal for such work as determined by weather conditions and by accepted practice in this locality, except as approved by the Architect.

H. The application of grass seed, fertilizer, limestone, and a suitable wood fiber or other mulch shall be accomplished in one operation for hydroseeding.

I. Hydroseeding shall be done by use of an approved spraying machine, which shall be operated only by personnel thoroughly familiar with this type of seeding operation.

J. Prior to starting work, Contractor shall furnish the Architect with a certified statement as to the number of pounds of materials to be used per 100 gallons of water and the number of square feet to be covered with the quantity of solution in the hydroseeder.

1. Materials shall be mixed with water in the machine and kept in an agitated state in order that the materials may be uniformly suspended in the water.
2. Solution shall be sprayed evenly over the area so that resulting deposits of all materials shall equal the required rates.
3. Spraying equipment shall be thoroughly cleaned and flushed prior to start of work and after every ten acres.
4. When inoculum is required, if the inoculum is left in the solution with fertilizer for longer than thirty minutes, a fresh charge of inoculum shall be added to the mixture.

3.6 MEADOW GRASS SEED MIX & DETENTION BASIN SEED MIX

A. Always apply on clean bare soil. Preparation of a clean weed free soil surface is necessary for optimal results. The mix may be applied by hydro-seeding, by mechanical spreader, or on small sites it can be spread by hand. Lightly rake, or roll to ensure proper seed to soil contact. Late Spring and early Summer seeding will benefit with a light mulching of weed-free straw to conserve moisture. If conditions are drier than usual, watering may be required. Fertilization is not required unless the soils are particularly infertile.

B. Best results are obtained with a Spring seeding. Late Fall and Winter dormant seeding require an increase in the seeding rate.

3.7 SODDING: INCLUDING TEMPORARY PLAY AREAS

A. Limit of sodding shall be shown on the Drawings. All areas on the plan shall be loamed and sodded only after written approval of the finished grading or as directed by the Landscape Architect.

B. Planting season for sod shall be from April 15 to June 1. The actual planting of sod shall be done, however, only during periods within this season which are normal for such work as determined by weather conditions and be accepted practice in this locality. At this option and on his responsibility the Contractor may

plant sod under unseasonable conditions without additional compensation, but subject to the Landscape Architect's approval as to time and methods.

C. Soil additives shall be spread and thoroughly incorporated into the later of loam and the upper 1 inch of the underlying subsoil by harrowing or other methods approved by the Landscape Architect. The following soil additives shall be incorporated:

1. Ground limestone as required by soil analysis to achieve a pH of 6.0 to 6.5.
2. Fertilizer as required by soil analysis.
3. Superphosphate at the rate of 20 lbs. Per 1,000 square feet.
4. Humus as required by soil analysis.

D. Sodding of lawns shall be done only by experienced workmen under the supervision of qualified foreman. Sodding shall consist of soil preparation, sodding, rolling, pegging, weeding, fertilizing, watering and otherwise providing all labor and materials necessary to secure the establishment of acceptable turf.

E. The soil on which the sod is laid shall be reasonably moist and shall be watered, if directed by the Landscape Architect. The sod shall be laid smoothly, edge to edge, and where continuous or solid sodding is called for on the plans sod shall be laid with the longest dimension parallel to the contours. Sodding shall start at the base of slopes and progress upward in continuous parallel rows. Vertical joints between sods shall be staggered. Immediately after laying, so shall be pressed firmly into contact with the sod bed by tamping, rolling, or by other approved method – press firmly as to eliminate all air pockets, provide tree and even surfaces, ensure knitting and protect all exposed sod edges, but without displacement of the sod or deformation of the sod surfaces. The sodded areas shall be watered evenly and at a rate of 5 gallons per square yard, unless otherwise directed by the Landscape Architect.

F. Areas of sod called on on plans as temporary play areas are to be watered and maintained by Landscape Contractor for the first year post installation. Contractor is responsible for ensuring that temporary play areas receive adequate water during this period. **Note: there is not an irrigation system for the temporary play areas.**

1. Temporary play areas are to be blocked off by contractor to all foot traffic for (6) six weeks post installation, to allow for root establishment.
2. Contractor is responsible for installing and maintaining barriers during this establishment period.

3.8 EROSION CONTROL FABRIC

A. Install as shown in Drawings and per Manufacturer's instructions.

B. Erosion control mat shall be secured by 11 gauge staples at a minimum size of 6" long with a 1" crown. Staple pattern should reflect the layouts for the corresponding slope given by the manufacturer.

3.9 MAINTENANCE AND PROTECTION OF PLANTS AND LAWN AREAS

A. Maintenance shall begin immediately after an area is planted or sodded and shall continue until final acceptance. The minimum maintenance period shall be ninety (90) calendar days after completion of all plant installations including lawn. Watering and mowing shall be done by the Contractor for the full 90 days, except for sodded temporary play areas, where contractor is responsible for watering for the first year, see 3.7 line F above. Final acceptance of the plant material cannot be made until the full 90 maintenance period has elapsed.

B. Maintenance shall include replacement of shrubs, mowing, watering, weeding, and fertilizing.

C. Watering of Lawn Areas:

1. First week: The Contractor shall provide all labor and arrange for all watering necessary for rooting of the plant materials. In the absence of adequate rainfall, watering shall be performed daily or as often as necessary during the first week and in sufficient quantity to maintain moist soil to a depth of at least 4 inches. Watering shall not be done during the heat of the day to help prevent wilting.

2. Second and Subsequent weeks: The Contractor shall water the lawn and plantings as required to maintain adequate moisture, until final acceptance, in the upper 4 inches of soil.

3. Watering shall be done in a manner that will provide uniform coverage, prevent erosion due to application of excessive quantities over small areas, and prevent damage to the finished surface by the watering equipment. The Contractor shall furnish sufficient watering equipment to apply one (1) complete coverage to the lawn areas and plantings in an eight (8) hour period.

D. Watering of Tree Plantings:

1. Portable Drip Irrigation System watering bags shall be kept filled as needed to maintain optimal plant health. Bags shall be filled a minimum of once each week regardless of rain conditions. The contractor shall be responsible for ensuring that watering bags are kept full for one full growing season after installation.

E. Mowing:

1. The first mowing of lawn areas shall not be attempted until the lawn is firmly rooted and secure in place. Not more than 40% of the grass leaf shall be removed by initial or subsequent mowings. Grass height shall be maintained between 2 inches and 2-1/2 inches unless otherwise specified. Thereafter grass shall be maintained at 2 inches until acceptance.

F. Fertilizing:

1. A second application of fertilizer, as specified herein and as outlined in the fertilizing schedule to be submitted by the Contractor, shall be applied approximately 6 weeks after the sod has been installed as directed by the Landscape Architect. Fertilizer shall be applied at the rate of 10 pounds per 1,000 square feet or as otherwise approved as part of the fertilizing schedule.

END OF SECTION

PAGE INTENTIONALLY LEFT BLANK

SECTION 33 05 13

MANHOLES AND STRUCTURES

PART 1 – GENERAL

1.1 GENERAL PROVISIONS

A. Attention is directed to the CONTRACT AND GENERAL CONDITIONS and all Sections within DIVISION 01 - GENERAL REQUIREMENTS which are hereby made a part of this Section of the Specifications.

B. The General Contractor shall either perform the work of this section with its own forces or shall subcontract such work to a subcontractor who will furnish a performance and payment bond for the complete scope of work and listing the City of Framingham as the co-oblige. Such bond shall be procured from a surety that is currently licensed to do business in Massachusetts and is currently listed on the United States Treasure Department circular 570. A copy of such bond shall be submitted to the Owner's Project Manager for approval and shall be in place prior to the subcontractor commencing any work on the project.

1.2 DESCRIPTION OF WORK

A. Work Included: Provide labor, materials and equipment necessary to complete the work of this Section, including but not limited to the following:

1. Install precast concrete manholes, catch basins, frames and covers, grates, manhole rungs, platforms, and appurtenances all as shown on the Drawings and as specified herein.

B. Related Work: The following items are not included in this Section and will be performed under the designated Sections:

1. Section 310000 - EARTH MOVING
2. Section 334100 - STORM UTILITY DRAINAGE PIPING
3. Section 333100 - SANITARY UTILITY SEWERAGE PIPING

1.3 REFERENCES

A. American Concrete Institute:

1. ACI 318 - Building Code Requirements for Structural Concrete.
2. ACI 530/530.1 - Building Code Requirements for Masonry Structures and Specifications for Masonry Structures.

B. ASTM International:

1. ASTM A48/A48M - Standard Specification for Gray Iron Castings.

2. ASTM A615 - Standard Specification for Deformed and Plain Billet-Steel Bars for Concrete Reinforcement
3. ASTM C32 - Standard Specification for Sewer and Manhole Brick
4. ASTM C39/C39M - Standard Test Method for Compressive Strength of Cylindrical Concrete Specimens.
5. ASTM C55 - Standard Specification for Concrete Brick.
6. ASTM C62 - Standard Specification for Building Brick (Solid Masonry Units Made From Clay or Shale).
7. ASTM C150 - Standard Specification for Portland Cement
8. ASTM C207 - Standard Specification for Hydrated Lime for Masonry Purposes
9. ASTM C478 - Standard Specification for Precast Reinforced Concrete Manhole Sections.
10. ASTM C497 - Standard Test Methods for Concrete Pipe, Manhole Sections, or Tile.
11. ASTM C913 - Standard Specification for Precast Concrete Water and Wastewater Structures.
12. ASTM C923 - Standard Specification for Resilient Connectors Between Reinforced Concrete Manhole Structures, Pipes, and Laterals.
13. ASTM D4097 - Contact Molded Glass Fiber Reinforced Chemical Resistant Tanks
14. ASTMD4101 - Standard Specification for Propylene Plastic Injection and Extrusion Materials

C. American Association of State Highway and Transportation Officials (AASHTO)

D. Occupational Safety and Health Administration (OSHA)

1.4 DESIGN REQUIREMENTS

A. Equivalent strength: Based on structural design of reinforced concrete as outlined in ACI 318.

B. Design of Lifting Devices for Precast Components: In accordance with ASTM C913.

C. Design of Joints for Precast Components: In accordance with ASTM C913; maximum leakage of 0.025 gallons per hour per foot of joint at 3 ft. of head.

1.5 SUBMITTALS

A. Section 013300 - Submittal Procedures: Requirements for submittals.

B. Shop Drawings: Indicate manhole locations, elevations, and sizes and elevations of penetrations.

C. Product Data: Submit cover and frame construction, features, configuration, dimensions.

1.6 QUALITY ASSURANCE

A. The quality of all materials, the process of manufacture, and the finished sections shall be subject to inspection and approval by the Engineer or other representative of the Owner. Such inspection may be made at the place of manufacture, or on the work after delivery, or at both places and the materials shall be subject to rejection at any time on account of failure to meet any of the requirements specified herein; even though samples may have been accepted as satisfactory as the place of manufacture. Material reject after delivery to the job shall be marked for identification and shall be removed from the job at one. All materials that have been damaged after delivery shall be rejected, and if already installed, shall be acceptably repaired, if permitted, or removed and replaced, entirely at the Contractor's expense.

B. At the time of inspection, the materials will be carefully examined for compliance with the applicable ASTM standard specification and this Section with the approved manufacturer's drawings. All manhole sections shall be inspected for general appearance, dimension, scratch strength, blisters, cracks, roughness, soundness, and other surface or structural imperfections. The surface shall be dense and close-textured.

C. Imperfections in manhole sections may be repaired, subject to the approval of the Engineer, after demonstration by the manufacturer that strong and permanent repairs result. Repairs shall be carefully inspected before final approval. Cement mortar used for repairs shall have a minimum compressive strength of 4,000 psi at seven days and 5,000 psi at 28 days, when tested in 3 inch x 6 inch cylinders stored in the standard manner. Epoxy mortar may be utilized for repairs subject to the approval of the Engineer.

1.7 QUALIFICATIONS

A. Manufacturer: Company specializing in manufacturing products specified in this Section with minimum three years documented experience.

1.8 DELIVERY, STORAGE AND HANDLING

A. Section 016000 - PRODUCT REQUIREMENTS: Product storage and handling requirements.

B. Comply with precast concrete manufacturer's instructions for unloading, storing, and moving precast manholes.

C. Store precast concrete manholes to prevent damage to Owner's property or other public or private property. Repair property damaged from materials storage.

D. Mark each precast structure by indentation or waterproof paint showing date of manufacture, manufacturer, and identifying symbols and numbers shown on Drawings to indicate its intended use.

1.9 ENVIRONMENTAL REQUIREMENTS

A. Section 016000 - PRODUCT REQUIREMENTS.

B. Maintain materials and surrounding air temperature to minimum 50 degrees F prior to, during, and 48 hours after completion of masonry work.

C. Cold Weather Requirements: ACI 530.

PART 2 - PRODUCTS

2.01 PRECAST CONCRETE MANHOLE SECTIONS

A. Precast concrete barrel sections and transition top sections shall conform to ASTM C478 and meet the following requirements:

1. Manholes shall have a minimum 48 inch interior diameter with a wall thickness of not less than 5 inch.
2. Top sections shall be eccentric except that barrel sections shall be used where shallow pipe cover requires a top section less than 4 feet.
3. Barrel sections shall have tongue and groove joints. Manholes shall be manufactured in the configuration shown on the Drawings with the bell of the manhole section pointing down.
4. All sections shall be cured by an approved method and shall not be shipped or subjected to loading until the concrete compressive strength has attained 3,000 psi and not before five days after fabrication or repair, whichever is longer.
5. Precast concrete barrel sections with top slabs and precast concrete transition sections shall be designed for a minimum of HS-20 loading plus the weight of the soil above at 120 pcf.
6. The date of manufacture and the name and trademark of the manufacturer shall be clearly marked on the inside of each precast section.
7. Precast concrete bases shall be constructed of and installed as shown on the Drawings. The thickness of the bottom slab of precast bases shall not be less than the manhole barrel sections or top slab, whichever is greater.
8. Knockout panels shall not be permitted.

2.02 CATCH BASINS

A. Precast reinforced concrete catch basin sections shall conform to the applicable requirements of ASTM C478, latest revision.

B. Basin shall be precast reinforced concrete 4 feet in diameter with penetrations cast into the basin for pipe connection; knockout panels shall not be permitted. Basins shall have a minimum wall thickness of 5 inch and a minimum bottom thickness of 6 inches. Basins shall have a sump of 4 feet. Top sections shall be a flat slab and have a minimum of 8 inches for support of cast iron frame and grate. The hole in the top section shall be 24 inches square size to accommodate frame and cover and be eccentric. The hole in the top section shall be located over the side opposite to the hooded outlet to facilitate future cleaning operations.

C. All concrete shall have a minimum compressive strength of 4,000 psi and a live load design base for all catch basins shall be HS-20 loading.

D. All catch basins shall be fitted with a hooded outlet. The hoods are to be positioned so they will not interfere with future cleaning operations. The hooded outlet cover shall be fabricated from marine grade fiberglass, stainless steel (18-8) attachment hardware, pressure sensitive oil resistant foam rubber gasket, PVC Schedule 40 fittings, and pipe for anti-siphon device.

E. Bedding material under catch basins and drain manholes shall conform to the requirements for of the Specifications for pipe bedding. A minimum of 12 inches of 3/4" crushed stone is required to provide a uniform base. If the material at the elevation that catch basins are to be set on is not suitable to support them, then this material shall be removed to a depth that will support the structure. The material approved by the Engineer shall be used to replace the removed material and be compacted before setting the base.

F. Catch basin frames and grates/covers shall be set at a finished elevation 1 inch below finish pavement elevation.

2.03 BRICK MASONRY

A. The bricks shall be good, sound, hard and uniformly burned, regular and uniform in shape, of compact size and texture and satisfactory to the Engineer. Underburned or salmon brick will not be acceptable and only whole brick shall be used unless otherwise permitted. In case bricks are rejected by the Engineer, they shall be immediately removed from the site of the work and satisfactory bricks used thereafter.

1. Bricks for the channels and sleeves shall comply with ASTM C32 for sewer brick; Grade SS (from clay or shale) except that the mean of five tests for absorption shall not exceed 8% and no individual brick shall exceed 11%.
2. Bricks for building up and leveling the manhole frames shall comply with ASTM C62.

B. Mortar used in the brickwork shall be composed of one part Type II Portland cement conforming to ASTM C150 and sand to which a small amount of hydrated lime not to exceed 10 lbs to each bag of cement shall be added.

C. The sand used shall be washed, cleaned, screened, sharp and well graded as to different sizes and with no grain larger than will pass a No. 4 sieve. It shall be free from vegetable matter, loam, organic or other materials of such nature or quantity to render it unsatisfactory.

D. The hydrated lime shall also conform to ASTM C207.

2.04 FRAMES, COVERS AND GRATES

A. Manufacturers:

1. All manufacturers producing such products shall be considered.
2. Substitutions: Section 016000 - PRODUCT REQUIREMENTS.

B. Manhole frames and covers shall be of good quality, strong, tough, even grained cast iron, smooth, free from scale, lumps, blisters, sand holes and defects of any kind that render them unfit for the service for which they are intended. Manhole covers and frame seats shall be machined to a true surface. Castings shall be thoroughly cleaned and subject to hammer inspection. Cast iron shall conform to ASTM A48, Class 30.

C. Manhole covers shall have a diamond pattern, pick holes, and the word 'SEWER', DRAIN', or as appropriate, cast in 3 in. letters.

D. Inlet frames and grates shall be of good quality, strong, tough, even grained cast iron, smooth, free from scale, lumps, blisters, sand holes and defects of any kind that render them unfit for the service for which they are intended. Catch basin grates and frame seats shall be machined to a true surface. Castings shall be thoroughly cleaned and subject to hammer inspection. Cast iron shall conform to ASTM A48, Class 30.

E. Grates, if located in a walking area, shall have spaces no greater than 1/2 inch wide in one direction. If gratings have elongated openings, then they shall be placed so that the long dimension is perpendicular to the dominant direction of travel.

2.05 JOINTING PRECAST MANHOLE SECTIONS

A. Tongue and groove joints shall be sealed with either a round rubber o-ring gasket or a preformed flexible joint sealant. The o-ring shall conform to ASTM C443.

B. Joints shall be designed and manufactured so that the completed joint will withstand an internal water pressure of 15 psi without leakage or displacement of the gasket or sealant.

2.06 MANHOLE RUNGS

A. Manhole rungs shall conform to the requirements of ASTM C478 and be of the following types:

1. Manhole rungs shall be steel reinforced copolymer polypropylene plastic. Rungs shall be 14 inches wide. Copolymer polypropylene shall conform to ASTM D4101. Steel reinforcing shall be 1/2 inch diameter, grade 60 conforming to ASTM A615 and shall be continuous throughout the rung. The portion of the legs to be embedded in the precast section shall have fins and be tapered to insure a secure bond.

2.07 PIPE CONNECTION TO MANHOLE

A. Manhole pipe connections may be accomplished in the following ways:

1. The 'Lock Joint Flexible Manhole Sleeve' shall be cast in the precast manhole base. The steel strap shall be protected from corrosion with a bituminous coat.
2. 'A-Lok' shall be a rubber like gasket cast in the precast manhole base. The rubber gasket shall be case into a formed opening in the manhole.
3. 'Kor-N-Seal' joint shall be installed as recommended by the manufacturer. The stainless steel clamp shall be protected from corrosion with a bituminous coat.

B. Clear Cover Opening: 24 inch diameter, or as otherwise indicated on Drawings.

C. Steps: 12 inch wide, 16 inch on center vertically, set into manhole, or as otherwise indicated on Drawings.

2.08 DAMPPROOFING

A. The dampproofing shall be Hydrocide 648 by Sonneborn Building Products, Dehydratine by A.C. Horn, Inc., Meadows Trowel Mastic, or approved equal.

2.09 CONFIGURATION

A. Shaft Construction: Concentric with eccentric cone top section; lipped male/female joints; sleeved to receive pipe sections.

B. Shape: Cylindrical.

C. Clear Inside Dimensions: 48 inches, or as otherwise indicated on Drawings.

D. Design Depth: As indicated on Drawings.

E. Clear Cover Opening: 24 inch diameter, or as otherwise indicated on Drawings.

F. Steps: 12 inch wide, 16 inch on center vertically, set into manhole, or as otherwise indicated on Drawings.

2.10 BEDDING MATERIALS

A. Bedding and Cover: 3/4 inch Crushed Stone in accordance with Section M2.01.4 of the MHD Standard Specifications.

B. Soil Backfill from Around Manhole: In pavement areas where controlled density fill is not specified, provide Ordinary Fill to the sub-base of the pavement, and then provide the required sub-base material for the pavement section. In grassed areas where controlled density fill is not specified, provide Ordinary Fill to a point 6 inches below finished grade, then Manufactured Topsoils to finished grade.

PART 3 - EXECUTION

3.01 EXAMINATION

A. Verify items provided by other sections of Work are properly sized and located.

B. Verify built-in items are in proper location, and ready for roughing into Work.

C. Verify correct size of manhole excavation.

3.02 PREPARATION

A. Coordinate placement of inlet and outlet pipe or duct sleeves required by other sections.

B. Do not install structures where site conditions induce loads exceeding structural capacity of structures.

C. Inspect precast concrete structures immediately prior to placement in excavation to verify structures are internally clean and free from damage. Remove and replace damaged units.

3.03 INSTALLATION

A. Excavation and Backfill:

1. Excavate for manholes to location and depth shown in accordance with Section 310000 - EARTHWORK and as otherwise specified herein. Provide clearance around sidewalls of structure for construction operations.
2. When groundwater is encountered, prevent accumulation of water in excavations. Place manholes in dry trench.
3. Where possibility exists of watertight structure becoming buoyant in flooded excavation, anchor structure to avoid flotation.

B. Place base pad, trowel top surface level.

C. Install manholes supported at proper grade and alignment on crushed stone bedding as shown on Drawings.

D. Backfill and compact excavations for manholes in accordance with Section 310000 - EARTHWORK.

E. Form and place manhole cylinder plumb and level, to correct dimensions and elevations.

F. Cut and fit for sleeves.

G. Grout base of shaft sections to achieve slope to exit piping. Trowel smooth. Contour to form continuous drainage channel, as indicated on Drawings.

H. Set cover frames and covers level without tipping, to correct elevations.

I. Coordinate with other sections of Work to provide correct size, shape, and location.

3.04 PRECAST CONCRETE INSTALLATION

A. Lift precast components at lifting points designated by manufacturer.

B. When lowering precast structures into excavations and joining pipe to units, take precautions to ensure interior of pipeline and structure remains clean.

C. Set precast structures bearing firmly and fully on crushed stone bedding, compacted in accordance with State of MHD specifications.

D. Assemble multi-section structures by lowering each section into excavation. Lower, set level, and firmly position base section before placing additional sections.

E. Remove foreign materials from joint surfaces and verify sealing materials are placed properly. Maintain alignment between sections by using guide devices affixed to lower section.

F. Joint sealing materials may be installed on site or at manufacturer's plant.

G. Verify installations satisfy required alignment and grade.

H. Cut structure to receive piping without creating openings larger than required to receive pipe. Fill annular space with mortar.

I. Cut pipe to finish flush with interior of structure.

J. Shape inverts through manhole as shown on Drawings.

3.05 FRAME AND COVER INSTALLATION

A. Set frames using mortar and masonry. Install radially laid sewer brick with 1/4 inch thick vertical joints at inside perimeter. Lay sewer brick in full bed of mortar and completely fill joints. Where more than one course of sewer brick is required, stagger vertical joints. No more than three courses of sewer brick shall be permitted.

B. Set frame and cover 2 inches above finished grade for manholes with covers located within unpaved areas to allow area to be graded away from cover beginning 1 inch below top surface of frame.

3.06 FIELD QUALITY CONTROL

A. Sections 014000 - QUALITY REQUIREMENTS, 016000 - PRODUCT REQUIREMENTS and 017700 - CLOSEOUT PROCEDURES.

B. Vertical Adjustment of Existing Manholes:

1. Where required, adjust top elevation of existing manholes to finished grades shown on Drawings.
2. Reset existing frames, grates and covers, carefully removed, cleaned of mortar fragments, to required elevation in accordance with requirements specified for installation of castings.
3. Remove concrete without damaging existing vertical reinforcing bars when removal of existing concrete wall is required. Clean vertical bars of concrete and bend into new concrete top slab or splice to required vertical reinforcement, as indicated Drawings.

3.07 LEAKAGE TESTS

A. Leakage tests shall be made and observed by the Engineer on each manhole. The test shall be as described below:

B. Vacuum Test (required on all new manholes):

1. The test shall be made using an inflatable compression band, vacuum pump, and appurtenances specifically designed for testing manholes. Test procedures shall be in accordance with the equipment manufacturer's recommendations. Contactor shall be fully familiar with the vacuum testing equipment and provide a minimum of four hours of instruction by a factory authorized representative at the outset of the project.
2. Each manhole shall be test immediately after assembly including the connection of pipes and prior to backfilling.
3. All lift holes shall be plugged with non-shrink grout and all pipes entering the manhole shall be plugged and braced to prevent the plug from being drawn into the manhole.
4. After test equipment is in place the test shall be run at the following rate and test times:

   a. For 4 foot diameter manholes:

      1) Initial test pressure – 10 inches Hg
      2) Test Time – 1 inch Hg drop to 9 inches Hg in one minute allowable for 0 feet to 10 feet deep manholes.

   b. If the pressure drop exceeds 1 inch Hg in the specified time the manhole shall be repaired in accordance with approved procedures and retested.
   c. If a manhole fails to meet a 1 inch Hg drop in the specified time after repairs the unit shall be water exfiltration tested as specified below and repaired as necessary.

C. Exfiltration Test (required as described above):

1. Assemble manhole in place; fill and point all lifting holes and exterior joints within 6 feet of the ground surface with an approved non-shrinking mortar. Test prior to placing the shelf and invert before filling and pointing the horizontal joints below 6 feet of depth. Lower groundwater table below bottom of manhole for the duration of the test. Plug all pipes and other openings into the manhole and brace to prevent blowout.
2. Fill manhole with water to the top of the cone section. If the excavation has not been backfilled and no water in observed moving down the surface of the manhole, the manhole is satisfactorily watertight. If the test, as described above is unsatisfactory to the Engineer, or if the manhole excavation has been backfilled, continue the test. A period of time may be permitted to allow for absorption. Following this period, refill manhole to the top of the cone, if necessary, and allow at least eight hours to pass. At the end of the test period, refill the manhole to the top of the cone again, measuring the volume of water added. Extrapolate the refill amount to a 24 hour leakage rate. If the manhole fails this requirement, but the leakage does not exceed three gallons per vertical foot per day, repairs by approved methods may be as directed by the Engineer. If leakage due to a defective joint exceeds this amount, the manhole shall be rejected. Uncover the rejected manhole as necessary to disassemble,

reconstruct, or replace it as directed by the Engineer. Retest the manhole, and if satisfactory, fill and point the interior joints.

3. No adjustment in the leakage allowance may be made for unknown causes such as leaking plugs, absorptions, or other. It will be assumed that all loss of water during the test is a result of leaks through the joints or through the entrance.
4. An infiltration test may not be substituted for an exfiltration test if the groundwater table is above the highest joint in the manhole. If there is no leakage into the manhole as determined by the Engineer, the manhole will be considered watertight. If the Engineer is not satisfied, testing shall be performed as described herein.

3.08 CLEANING

A. All new manholes shall be thoroughly cleaned of all silt, debris, and foreign matter of any kind, prior to final inspection.

END OF SECTION

DO NOT REMOVE
THIS PAGE INTENTIONALLY LEFT BLANK

SECTION 33 10 00

WATER UTILITIES

PART 1 - GENERAL

1.1 GENERAL PROVISIONS

A. Attention is directed to the CONTRACT AND GENERAL CONDITIONS and all Sections within DIVISION 01 - GENERAL REQUIREMENTS which are hereby made a part of this Section of the Specifications.

B. The General Contractor shall either perform the work of this section with its own forces or shall subcontract such work to a subcontractor who will furnish a performance and payment bond for the complete scope of work and listing the City of Framingham as the co-oblige. Such bond shall be procured from a surety that is currently licensed to do business in Massachusetts and is currently listed on the United States Treasure Department circular 570. A copy of such bond shall be submitted to the Owner's Project Manager for approval and shall be in place prior to the subcontractor commencing any work on the project.

1.2 SUMMARY

A. Section Includes:

1. Pipe and fittings for site water line including water mains and laterals.
2. Valves.
3. Hydrants.
4. Backflow preventers.
5. Underground pipe markers.
6. Bedding and cover materials.

B. Related Sections:

1. Section 310000 - EARTH MOVING.
2. Section 311000 - SITE CLEARING.
3. Section 321216 - BITUMINOUS CONCRETE PAVING.

1.3 REFERENCES

A. American Association of State Highway and Transportation Officials:

1. AASHTO T180 - Standard Specification for Moisture-Density Relations of Soils Using a 10 lb. Rammer and an 18 in. Drop.

B. American Society of Mechanical Engineers:

1. ASME B16.18 - Cast Copper Alloy Solder Joint Pressure Fittings.
2. ASME B16.22 - Wrought Copper and Copper Alloy Solder Joint Pressure Fittings.

C. American Society of Sanitary Engineering:

1. ASSE 1012 - Backflow Preventer with Intermediate Atmospheric Vent.
2. ASSE 1013 - Reduced Pressure Principle Backflow Preventers.

D. ASTM International:

1. ASTM B88 - Standard Specification for Seamless Copper Water Tube.
2. ASTM C858 - Standard Specification for Underground Precast Concrete Utility Structures.
3. ASTM D698 - Standard Test Method for Laboratory Compaction Characteristics of Soil Using Standard Effort (12,400 ft-lbf/ft3).
4. ASTM D1557 - Standard Test Method for Laboratory Compaction Characteristics of Soil Using Modified Effort (6,000 ft-lbf/ft3).
5. ASTM D1785 - Standard Specification for Poly Vinyl Chloride (PVC) Plastic Pipe, Schedules 40, 80, and 120.
6. ASTM D2241 - Standard Specification for Poly Vinyl Chloride (PVC) Pressure-Rated Pipe (SDR Series).
7. ASTM D2466 - Standard Specification for Poly Vinyl Chloride (PVC) Plastic Pipe Fittings, Schedule 40.
8. ASTM D2855 - Standard Practice for Making Solvent-Cemented Joints with Poly Vinyl Chloride (PVC) Pipe and Fittings.
9. ASTM D2922 - Standard Test Method for Density of Soil and Soil-Aggregate in Place by Nuclear Methods (Shallow Depth).
10. ASTM D3017 - Standard Test Method for Water Content of Soil and Rock in Place by Nuclear Methods (Shallow Depth).
11. ASTM D3035 - Standard Specification for Polyethylene (PE) Plastic Pipe (DR-PR) Based on Controlled Outside Diameter.
12. ASTM D3139 - Standard Specification for Joints for Plastic Pressure Pipes Using Flexible Elastomeric Seals.

E. American Welding Society:

1. AWS A5.8 - Specification for Filler Metals for Brazing and Braze Welding.

F. American Water Works Association:

1. AWWA C104 - American National Standard for Cement-Mortar Lining for Ductile-Iron Pipe and Fittings for Water.
2. AWWA C105 - American National Standard for Polyethylene Encasement for Ductile-Iron Pipe Systems.
3. AWWA C111 - American National Standard for Rubber-Gasket
4. Joints for Ductile-Iron Pressure Pipe and Fittings.
5. AWWA C151 - American National Standard for Ductile-Iron Pipe, Centrifugally Cast, for Water.
6. AWWA C500 - Metal-Seated Gate Valves for Water Supply Service.
7. AWWA C502 - Dry-Barrel Fire Hydrants.
8. AWWA C504 - Rubber-Sealed Butterfly Valves.
9. AWWA C508 - Swing-Check Valves for Waterworks Service, 2 in. (50 mm) Through 24in. (600 mm) NPS.
10. AWWA C509 - Resilient-Seated Gate Valves for Water-Supply Service.
11. AWWA C600 - Installation of Ductile-Iron Water Mains and Their Appurtenances.
12. AWWA C606 - Grooved and Shouldered Joints.

13. AWWA C700 - Cold-Water Meters - Displacement Type, Bronze Main Case.
14. AWWA C701 - Cold-Water Meters - Turbine Type, for Customer Service.
15. AWWA C702 - Cold-Water Meters - Compound Type.
16. AWWA C706 - Direct-Reading, Remote-Registration Systems for Cold-Water Meters.
17. AWWA C900 - Polyvinyl Chloride (PVC) Pressure Pipe, 4 in. through 12 in., for Water Distribution.
18. AWWA C901 - Polyethylene (PE) Pressure Pipe and Tubing, 1/2 in. through 3 in., for Water Service.
19. AWWA M6 - Water Meters - Selection, Installation, Testing, and Maintenance.

G. Underwriters Laboratories Inc.:

1. UL 246 - Hydrants for Fire - Protection Service.

1.4 SUBMITTALS

A. Section 013300 - Submittal Procedures: Requirements for submittals.

B. Product Data: Submit data on pipe materials, pipe fittings, valves, hydrants, and accessories.

C. Manufacturer's Certificate: Certify products meet or exceed specified requirements.

1.5 CLOSEOUT SUBMITTALS

A. Section 017700 - CLOSEOUT PROCEDURES.

B. Project Record Documents: Record actual locations of piping mains, valves, connections, thrust restraints, and invert elevations.

C. Identify and describe unexpected variations to subsoil conditions or discovery of uncharted utilities.

1.6 QUALITY ASSURANCE

A. Perform Work in accordance with MHD and MA DEP standards, including the potable water supply construction permit issued for this project.

B. Maintain one copy of each document on site.

C. Valves: Manufacturer's name and pressure rating marked on valve body.

1.7 DELIVERY, STORAGE, AND HANDLING

A. Section 016000 - PRODUCT REQUIREMENTS: Requirements for transporting, handling, storing, and protecting products.

B. Deliver and store valves in shipping containers with labeling in place.

PART 2 - PRODUCTS

2.1 WATER PIPING

A. Pipe shall be ductile iron push on joint pipe manufactured in accordance with the requirements of ANSI/AWWA C151/A21.51 and shall be thickness Class 52 with a minimal wall thickness of 0.31 inch for 6 inch pipe, 0.33 inch for 8 inch pipe, 0.35 inch for 10 inch pipe, and 0.37 inch for 12 inch pipe. Pipe thickness shall be designated in accordance with ANSI/AWWA C150/A21.50 and shall be based on laying connections and internal pressure as specified in the project plans. The rated working pressure shall be a minimum of 350 psi. Push on joints for such pipe shall be in accordance with ANSI A21.11/AWWA C111. Only in special circumstances will mechanical joints be allowed with the prior approval of the Engineer. Pipe shall have cement mortar lining twice the normal thickness and tar coating in accordance with ANSI A21.4-90/AWWA C104. Pipe lengths shall be standard 18 feet or 20 feet unless otherwise approved. Bell joint end shall have a rubber gasket to assure a permanent seal. The spigot end shall have a slight bevel for easy passage through gasket.

B. Ductile iron water pipe shall be installed in a flat bottom trench, backfilled lightly with a selected material removed in excavation with nothing larger than 2 inches in diameter. This material will be consolidated to centerline of pipe; after this is done the same materials will be used to provide a 12 inch cover over the top of the installed main.

C. Ductile iron water pipe shall not be laid with a deflection of more than 12 inches.

2.2 HYDRANTS

A. Break flange type, (AWWA C502, latest revision), steamer connection 4 inch, 2-2¼ inch side hose connections, national standard threads, positive drain, open left with pentagon operating nut, inlet 6 inches, 7 inch diameter barrel and mechanical joint hub. Hydrants shall be restrained back to main, thrust block behind, 3/4 inch stone from bottom of hydrant boot to 8 inches over drain port, and 5-1/4 inch valve opening. All hydrants shall be set with steamer facing the street or parking lots with a minimum of 15 inches from finish grade to bottom of steamer connection. All hydrants shall be painted per City of Framingham Water Department requirements.

B. Hydrants shall be designed for 250 psi working pressure and shall conform in every respect to the specifications adopted by the AWWA. Hydrants shall be given two coats of quality paint after installation.

C. Hydrants shall be identical to present City of Framingham Fire and/or Water Department requirements.

D. The City has standardized on American Darling Model No. B-62B as manufactured by American Flow Control Inc.

E. Installation: No hydrant shall be located within 20 feet of a driveway curb cut. Maximum allowed distance for hydrant back from face of berm is 8 feet with a minimum distance of 2 feet. Bury depth shall be 5’-6”.

F. There shall be no plantings such as, but not limited to, shrubs or bushes, planted within 10 feet of any hydrant.

2.3 SERVICE BOXES

A. Plug cover to be in cement or asphalt, the word 'WATER' shall be cast into the cover, the box will be of a length in height to accommodate any bury depth with 1 foot adjustment height. The overall height is to be 4-1/2 to 5-1/2 feet unless otherwise approved by the engineer. The service box will be reinforced at arch and pipe ring area and will accommodate up to a 1 inch curb stop. Service box rod will have a heavy ductile iron yoke with a brass copper pin. Service boxes shall be identical to present City of Framingham Water Department requirements.

2.4 VALVE BOXES

A. Valve boxes shall be cast iron, tar coated, two piece adjustable sliding type with a top flange and a minimum inside shaft diameter of 5-1/4 inches. Boxes shall have the word 'WATER' clearly cast into the cover. Bell end of the lower sections shall in all cases be sufficiently large enough to fit over the stuffing boxes of the valves. Valve boxes shall be buried 5 feet or deeper to accommodate installation and have a minimum of 12 inch overlap so there is 1 foot adjustment. A positive centering cap made of high strength plastics should be placed over the valve onto which the valve box will be centered. Valve boxes shall be identical to present City of Framingham Water Department requirements.

2.5 GATE VALVES

A. Manufacturers: Shall be A.F.C. Series 2500 Resilient Seat, Mueller Resilient Seat, Metro Seat #5460 & #5860. Gate boxes shall be identical to present City of Framingham Water Department requirements.

B. 2-1/2 inch and Smaller: Brass or Bronze body, non-rising stem, inside screw, single wedge or disc, compression ends, with control rod, extension box and valve key. Open right. Epoxy coated.

C. 3 inch and Larger: AWWA C500, Iron body, bronze trim, non-rising stem with square nut, single wedge, flanged ends, control rod, extension box and valve key. Open right. Epoxy coated.

2.6 BACKFLOW PREVENTERS

A. Manufacturers: Any manufacturer whose product meets the requirements of the specifications, and the requirements of the City of Framingham Water Department, shall be considered.

B. Furnish materials in accordance with MHD and MA DEP standards.

C. Reduced Pressure Backflow Preventers:

1. Comply with ASSE 1013.
2. Bronze body, with bronze internal parts and stainless steel springs.
3. Two independently operating, spring loaded check valves; diaphragm type differential pressure relief valve located between check valves; third check valve opening under back pressure in case of diaphragm failure; non-threaded vent outlet; assembled with two gate valves, strainer, and four test cocks.

D. Double Check Valve Assemblies: Comply with ASSE 1012; Bronze body with corrosion resistant internal parts and stainless steel springs; two independently operating check valves with intermediate atmospheric vent.

2.7 UNDERGROUND PIPE MARKERS

A. Trace Wire: Magnetic detectable conductor, brightly colored plastic covering, imprinted with "Water Service" in large letters.

2.8 BEDDING AND COVER MATERIALS

A. Bedding: 1-1/2 inch stone in accordance with Section M2.01.1 of the MHD Standards

B. Cover: 3/4 inch Crushed Stone in accordance with Section M2.01.4 of the MHD Standards

C. Soil Backfill from Above Pipe to Finish Grade: Ordinary Fill as specified in Section 310000 - EARTHWORK.

D. Bituminous Asphalt Patch: Refer to patching requirements under Section 321216 - ASPHALT PAVING.

2.9 JOINT RESTRAINT PRODUCTS

A. Wedge Action Retaining Joints may be used wherever approved by the City of Framingham and shall be manufactured of ductile iron conforming to ASTM A536. The mechanical joint restraint shall be Megalug Series 1100 or equal approved by DPW.

B. Concrete for Thrust Blocks: 4,000 psi concrete in accordance with Section M4.02.00 of the MHD Standards.

PART 3 - EXECUTION

3.1 EXAMINATION

A. Verify building service connection and municipal utility water main size, location, and invert are as indicated on Drawings.

3.2 PREPARATION

A. Cut pipe ends square, ream pipe and tube ends to full pipe diameter, remove burrs.

B. Remove scale and dirt on inside and outside before assembly.

C. Prepare pipe connections to equipment with flanges or unions.

3.3 BEDDING

A. Excavate pipe trench in accordance with Section 310000 - EARTHWORK for Work of this Section.

B. Form and place concrete for pipe thrust restraints at change of pipe direction. Place concrete to permit full access to pipe and pipe accessories. Provide square footage of thrust restraint bearing on subsoil per detail.

C. Place bedding material at trench bottom, level fill materials in one continuous layer not exceeding 8 inch compacted depth; compact to 95 percent.

D. Backfill around sides and to top of pipe in accordance with Section 310000 - EARTHWORK.

E. Maintain optimum moisture content of fill material to attain required compaction density.

F. Place fill materials in accordance with Section 310000 - EARTHWORK and Section 321216 - ASPHALT PAVING.

3.4 INSTALLATION - PIPE

A. Maintain 10 foot horizontal separation of water piping from sewer piping, unless site constraints prohibit.

B. Install pipe to indicated elevation to within tolerance of 5/8 inch.

C. Route pipe in straight line.

D. Install pipe to allow for expansion and contraction without stressing pipe or joints.

E. Form and place concrete for thrust restraints at each elbow or change of direction of pipe main.

F. Establish elevations of buried piping with not less than 5.5 feet of cover. If cover is less than 5.5 feet, the pipe shall be insulated with 2 inches of extruded polystyrene insulation. The pipe shall maintain a minimum of 4 feet of cover.

G. Install trace wire continuous over top of pipe.

H. Backfill trench in accordance with Section 310000.

I. Install Work in accordance with MHD and MA DEP standards.

3.5 UNDERGROUND PIPE MARKERS

A. Manufacturers:

1. Any manufacturers of such products shall be considered.
2. Substitutions: Refer to Section 016000 - PRODUCT REQUIREMENTS.

B. Plastic Ribbon Tape: Bright colored, imprinted with "WATER" in large letters, minimum 6 inches wide by 4 mil. thick, manufactured for direct burial service.

C. Trace Wire: Magnetic detectable conductor, brightly colored plastic covering, imprinted with "WATER SERVICE" in large letters.

3.5 INSTALLATION - VALVES

A. Set valves on compacted soil.

B. Center and plumb valve box over valve. Set box cover flush with finished grade.

C. Install Work in accordance with MHD and MA DEP standards.

3.6 SERVICE CONNECTIONS

A. Install water service in accordance with double check valve backflow preventer.

B. Install water service to of building. Connect to building water service.

C. Install Work in accordance with Mass State Plumbing Code.

3.7 DISINFECTION OF DOMESTIC WATER PIPING SYSTEM

A. CLOSEOUT SUBMITTALS

1. Section 017700 - Closeout Procedures
2. DISINFECTION REPORT:

a. Type and form of disinfectant used.
b. Date and time of disinfectant injection start and time of completion.
c. Test locations.
d. Name of person collecting samples.
e. Initial and 24 hour disinfectant residuals in treated water in ppm for each outlet tested.
f. Date and time of flushing start and completion. Disinfectant residual after flushing in ppm for each outlet tested.

3. Bacteriological REPORT:

   a. Date issued, project name, and testing laboratory name, address, and telephone number.
   b. Time and date of water sample collection.
   c. Name of person collecting samples.
   d. Test locations.
   e. Initial and 24 hour disinfectant residuals in ppm. for each outlet tested.
   f. Coliform bacteria test results for each outlet tested.
   g. Certify water conforms, or fails to conform, to bacterial standards of MA DEP standards for drinking water.
   h. Water Quality Certificate: Certify water conforms to quality standards of MA DEP, suitable for human consumption.

4. QUALITY ASSURANCE

   a. Perform Work in accordance with AWWA C651 (equivalent to State standards).
   b. Maintain one copy of each document on site.

5. QUALIFICATIONS

   a. Water Treatment Firm: Company specializing in disinfecting potable water systems specified in this section with minimum three years documented experience.
   b. Testing Firm: Company specializing in testing and examining potable water systems, approved by Commonwealth of Massachusetts.
   c. Submit bacteriologist's signature and authority associated with testing.

6. DISINFECTION CHEMICALS

   a. Chemicals: Chlorine solution used for disinfecting springs, wells, and other water systems shall consist of a solution of water and liquid chlorine, sodium hypochlorite, calcium hypochlorite, or chloride of lime.
   b. Liquid forms of chlorine or sodium hypochlorite and powder forms of calcium hypochlorite or chloride of lime shall be used according to the instructions supplied by the manufacturer and as recommended by the Massachusetts Department of Health.
   c. If sodium hypochlorite is already in solution as a laundry bleach containing 5.25% sodium hypochlorite, it shall be used at the rate of one part per 12,000 parts of water to be disinfected. The dosage should be sufficient to produce a chlorine taste in the water.

7. EXAMINATION

   a. Verify existing conditions before starting work.
   b. Verify piping system has been cleaned, inspected, and pressure tested.
   c. Perform scheduling and disinfecting activity with start-up, water pressure testing, adjusting and balancing, demonstration procedures, including coordination with related systems.

8. INSTALLATION

a. Provide and attach required equipment to perform the Work of this section.
b. Perform disinfection of water distribution system and installation of system and pressure testing.
c. Introduce treatment into piping system at a concentration of 50 mg Cl/L.
d. Maintain disinfectant in system for 24 hours.
e. Flush, circulate, and clean until required cleanliness is achieved; use municipal domestic water.
f. Replace permanent system devices removed for disinfection.

9. Disinfection, FLUSHING, AND SAMPLING:

a. Disinfect pipeline installation in accordance with AWWA C651. Use of liquid chlorine is not permitted
b. Upon completion of retention period required for disinfection, flush pipeline until chlorine concentration in water leaving pipeline is no higher than that generally prevailing in existing system or is acceptable for domestic use.
c. Legally dispose of chlorinated water. When chlorinated discharge may cause damage to environment, apply neutralizing chemical to chlorinated water to neutralize chlorine residual remaining in water.
d. After final flushing and before pipeline is connected to existing system, or placed in service, employ an approved independent testing laboratory to sample, test and certify water quality suitable for human consumption.

3.8 FIELD QUALITY CONTROL

A. Sections 014000 - QUALITY REQUIREMENTS and 017700 - CLOSEOUT PROCEDURES.

B. Pressure test system. Repair leaks and re-test.

1. After completion of pipeline installation, including backfill, but prior to final connection to existing system, conduct, in presence of Architect/Engineer, concurrent hydrostatic pressure and leakage tests in accordance with AWWA C600.
2. Provide equipment required to perform leakage and hydrostatic pressure tests.
3. Test Pressure: Not less than 200 psi or 50 psi in excess of maximum static pressure, whichever is greater.
4. Conduct hydrostatic test for at least two-hour duration.
5. No pipeline installation will be approved when pressure varies by more than 5 psi at completion of hydrostatic pressure test.
6. Before applying test pressure, completely expel air from section of piping under test. Provide corporation cocks so air can be expelled as pipeline is filled with water. After air has been expelled, close corporation cocks and apply test pressure. At conclusion of tests, remove corporation cocks removed and plug resulting piping openings.
7. Slowly bring piping to test pressure and allow system to stabilize prior to conducting leakage test. Do not open or close valves at differential pressures above rated pressure.
8. Examine exposed piping, fittings, valves, hydrants, and joints carefully during hydrostatic pressure test. Repair or replace damage or defective pipe, fittings, valves, hydrants, or joints discovered, following pressure test.

9. When leakage is detected, locate source and make repairs. Repeat test until specified leakage requirements are met.

C. Compaction Testing for Bedding: In accordance with ASTM D1557.

D. When tests indicate Work does not meet specified requirements, remove Work, replace and retest.

E. Frequency of Compaction Tests: As directed by Engineer.

END OF SECTION

DO NOT REMOVE
THIS PAGE INTENTIONALLY LEFT BLANK

SECTION 33 31 00

SANITARY UTILITY SEWERAGE PIPING

PART 1 – GENERAL

1.1 GENERAL PROVISIONS

A. Attention is directed to the CONTRACT AND GENERAL CONDITIONS and all Sections within DIVISION 01 - GENERAL REQUIREMENTS which are hereby made a part of this Section of the Specifications.

1.2 DESCRIPTION OF WORK

A. Work Included: Provide labor, materials and equipment necessary to complete the work of this Section, including but not limited to the following:

1. Install and test polyvinyl chloride (PVC) sewer pipe, complete as shown on the Drawings and as specified herein.
2. Pipe or piping refers to all pipe, fittings, material and appurtenances required to construct PVC gravity and pressure sewer pipe complete, in place.

B. Related Work: The following items are not included in this Section and will be performed under the designated Sections:

1. Section 310000 - EARTH MOVING: Soil for backfill in trenches.

1.3 REFERENCES

A. American Association of State Highway and Transportation Officials:

1. AASHTO T180 - Standard Specification for Moisture-Density Relations of Soils Using a 10 lb. Rammer and an 18 in. Drop.

B. ASTM International:

1. ASTM D1784 - Standard Specification for Rigid Poly (Vinyl Chloride) (PVC) Compounds and Chlorinated Rigid Poly (Vinyl Chloride) (CPVC) Compounds
2. ASTM D1785 - Standard Specification for Poly Vinyl Chloride (PVC) Plastic Pipe, Schedules 40, 80, and 120.
3. ASTM D2241 - Standard Specification for Poly (Vinyl Chloride) (PVC) Pressure-Rated Pipe (SDR Series)
4. ASTM D2321 - Standard Practice for Underground Installation of Thermoplastic Pipe for Sewers and Other Gravity-Flow Applications.
5. ASTM D2466 - Standard Specification for Poly Vinyl Chloride (PVC) Plastic Pipe Fittings, Schedule 40.
6. ASTM D2564 - Standard Specification for Solvent Cements for Poly Vinyl Chloride (PVC) Plastic Piping Systems.

7. ASTM D2729 - Standard Specification for Poly Vinyl Chloride (PVC) Sewer Pipe and Fittings.
8. ASTM D2855 - Standard Practice for Making Solvent-Cemented Joints with Poly Vinyl Chloride (PVC) Pipe and Fittings.
9. ASTM D2922 - Standard Test Method for Density of Soil and Soil-Aggregate in Place by Nuclear Methods (Shallow Depth).
10. ASTM D3034 - Standard Specification for Type PSM Poly Vinyl Chloride (PVC) Sewer Pipe and Fittings.
11. ASTM D3139 - Standard Specification for Joints for Plastic Pressure Pipes using Flexible Elastomeric Seals
12. ASTM D3212 - Standard Specification for Joints for Drain and Sewer Plastic Pipes Using Flexible Elastomeric Seals
13. ASTM F477 - Standard Specification for Elastomeric Seals (Gaskets) for Joining Plastic Pipe.
14. ASTM F789 - Standard Specification of Type PS-46 Poly (Vinyl Chloride) (PVC) Plastic Gravity Flow Sewer Pipe and Fittings.

1.4 DEFINITIONS

A. Bedding: Fill placed under, beside and directly over pipe, prior to subsequent backfill operations.

1.5 SUBMITTALS

A. Section 013300 - Submittal Procedures: Requirements for submittals.

B. Product Data: Submit data indicating pipe material used, pipe accessories, and fittings.

C. Manufacturer's Installation Instructions: Indicate special procedures required to install Products specified.

D. Manufacturer's Certificate: Certify products meet or exceed specified requirements.

1.6 CLOSEOUT SUBMITTALS

A. Section 017700 - CLOSEOUT PROCEDURES.

B. Project Record Documents: Record location of pipe runs, connections, manholes, cleanouts, and invert in and invert out elevations.

C. Identify and describe unexpected variations to subsoil conditions or discovery of uncharted utilities.

1.7 QUALITY ASSURANCE

A. All PVC sewer pipe shall be from a single manufacturer. The supplier shall be responsible for the provision of all test requirements specified in ASTM D3034 or ASTM F789 as applicable. In addition, all PVC pipe to be installed under this Contract may be

inspected at the plant for compliance with these Specifications by an independent testing laboratory provided by the Owner. The Contractor shall require the manufacturer's cooperation in these inspections. The cost of plant inspection of all pipe approved for this Contractor, plus the cost of inspection of a reasonable amount of disapproved pipe, will be borne by the Owner.

B. Inspections of the pipe may also be made by the Engineer or other representatives of the Owner after delivery. The pipe shall be subject to rejection at any time on account of failure to meet any of the Specification requirements, even though the sample pipes may have been accepted as satisfactory at the place of manufacture. Pipe rejected after delivery shall be marked for identification and shall be removed from the job at once.

1.8 DELIVERY, STORAGE, AND HANDLING

A. All items shall be bundled or packaged in such a manner as to provide adequate protection of the ends during transportation to the site. Any pipe damaged in shipment shall be replaced as directed by the Engineer.

B. PVC items deteriorate in sunlight and are slightly brittle, especially at lower temperatures, so care shall be taken in loading, transporting, and unloading items to prevent damage to the items. All items shall be examined before installation and no piece shall be installed which is found to be defective. Handling and installation of pipe and fittings shall be in accordance with the manufacturer's instructions, references standards, and as specified herein.

C. Any pipe or fitting showing a crack or which has received a blow that may have caused an incident fracture, even though no such fracture can be seen, shall be marked as rejected and removed at once from the work site.

D. While stored, pipe shall be adequately supported from below at not more than 3 foot intervals to prevent deformation. The pipe shall not be stacked higher than 6 feet.

E. Pipe and fittings shall be stored in a manner which will keep them at ambient outdoor temperatures and out of the sunlight. Temporary shading to meet this requirement shall be provided. Simple covering of the pipe and fittings which allows temperature buildup or direct or indirect sunlight shall not be permitted.

F. If any defective item is discovered after it has been installed, it shall be removed and replaced with an exact replacement item in a satisfactory manner by the Contractor, at the Contractor's own expense. All pipe and fittings shall be thoroughly cleaned before installation and the interior shall be kept clean until testing.

G. In handling the items, use special devices and methods as to achieve the results specified herein. No un-cushioned devices shall be used in handling the item.

1.9 PRE-INSTALLATION MEETINGS

A. Convene minimum one week prior to commencing work of this section.

1.10 FIELD MEASUREMENT

A. Verify field measurements and elevations are as indicated.

1.11 COORDINATION

A. Coordinate the Work with abandonment of existing septic tanks and associated piping, and abandonment of existing leaching fields.

PART 2 - PRODUCTS

2.1 SANITARY SEWAGE GRAVITY PIPE

A. Plastic Pipe: ASTM D3034, Type PSM, SDR 35, Poly Vinyl Chloride (PVC) material; inside nominal diameter of 8 in., bell and spigot style rubber ring sealed gasket joint.

1. Fittings: PVC.
2. Push On Joints: ASTM F477, elastomeric gaskets per ASTM D3212, securely locked into place to prevent displacement during assembly.
3. All fittings and accessories for sewer shall have bell and/or spigot configurations compatible with the pipe.

2.2 UNDERGROUND PIPE MARKERS

A. Manufacturers:

1. Any manufacturers of such products shall be considered.
2. Substitutions: Refer to Section 016000 - PRODUCT REQUIREMENTS.

B. Plastic Ribbon Tape: Bright colored, imprinted with "Sewer Line" in large letters, minimum 6 inches wide by 4 mil. thick, manufactured for direct burial service.

2.3 MANHOLES

A. In accordance with Section 330513 - MANHOLES AND STRUCTURES

2.4 BEDDING AND COVER MATERIALS

A. Bedding and Cover: 3/4 inch crushed stone in accordance with Section M2.01.4 of the MHD Standard Specifications.

B. Soil Backfill from Above Pipe: In pavement areas where controlled density fill is not specified, provide Ordinary Fill to the sub-base of the pavement, and then provide the required sub-base material for the pavement section. In grassed areas where controlled density fill is not specified, provide Special Borrow per MassDOT Spec.

M1.02.0 to a point 6 inches below finished grade, then Manufactured Topsoil to finished grade.

PART 3 - EXECUTION

3.1 EXAMINATION

A. Verify existing conditions before starting work.

B. Verify trench cut is ready to receive work and excavations, dimensions, and elevations are as indicated on the Drawings.

3.2 PREPARATION

A. Correct over excavation with coarse aggregate.

B. Remove large stones or other hard matter which could damage pipe or impede consistent backfilling or compaction.

3.3 BEDDING

A. Excavate pipe trench in accordance with Section 310000 - EARTHWORK.

B. Place bedding material at trench bottom, level materials in continuous layer not exceeding 6 inches.

C. Maintain optimum moisture content of bedding material to attain required compaction density.

3.4 INSTALLATION OF PVC PIPE AND FITTINGS

A. No single piece of pipe shall be laid unless it is straight. The centerline of the pipe shall not deviate from a straight line drawn between the centers of the opening at the ends of the pip by more than 1/16 inch per foot of length. If a piece of pipe fails to meet this required check for straightness, it shall be rejected and removed from the site. Laying instructions of the pipe shall be explicitly followed.

B. If any defective pipe is discovered after it has been installed, it shall be removed and replaced with a sound pipe in a satisfactory manner at no additional cost to the Owner. All pipe and fittings shall be thoroughly cleaned before installation, shall be kept clean until they are used in the work, and when laid shall conform to the lines and grades required. PVC pipe and fittings shall be installed in accordance with requirements of the manufacturer, ASTM D2321 or as otherwise provided herein.

C. As soon as the excavation is complete to normal grade of the bottom of the trench, bedding shall be placed, compacted, and graded to provide firm, uniform and continuous support for the pipe. Bell holes shall be excavated so that only the barrel of

the pipe bears upon the bedding. The pipe shall be lad accurately to the lines and grades indicated on the Drawings. Blocking under the pipe shall not be permitted. Bedding shall be placed evenly on each side of the pipe to mid-diameter and hand tools shall be used to force the bedding under the haunches of the pipe and into the bell holes to give firm, continuous support for the pipe. The initial 3 feet of backfill above the bedding shall be placed in 1 foot layers and carefully compacted, where controlled density fill is not specified. Generally, the compaction shall be done evenly on each side of the pipe and compaction equipment shall not be operated directly over the pipe until sufficient backfill has been placed to ensure that such compaction equipment will not have a damaging effect on the pipe. Equipment used in compacting the initial 3 feet of backfill shall be approved by the pipe manufacturer prior to use.

D. All pipe shall be sound and clean before installation. When installation is not in progress, including lunchtime, the open ends of the pipe shall be closed by watertight plug or other approved means. Good alignment shall be preserved during installation. The deflection at joints shall not exceed that recommended by the manufacturer. Fittings, in addition to those shown on the plans, shall be provided, if required, in crossing utilities which may be encountered upon opening the trench.

E. When cutting pipe is required, the cutting shall be done by machine, leaving a smooth cut at right angles to the axis of the pipe. Cut ends of the pipe to be used with a bell shall be beveled to the manufactured spigot end.

F. The Engineer may examine each bell and spigot end to determine whether any preformed joint has been damaged prior to installation. Any pipe having defective joint surfaces shall be rejected, marked as such and immediately removed from the job site.

G. Each length of the pipe shall have the assembly mark aligned with the pipe previously laid and held securely until enough backfill has been placed to hold the pipe in place. Joints shall not be ‘pulled’ or ‘cramped.’

H. Before any joint is made, the pipe shall be checked to assure that a close joint with the next adjoining pipe has been maintained and that the inverts are matched and conform to the required grade. The pipe shall not be driven down to grade by striking it.

I. Precautions shall be taken to prevent flotation of the pipe in the trench.

J. When moveable trench bracing such as trench boxes, moveable sheeting, shoring or plates are used to support the sides of the trench, care shall be taken in placing and moving the boxes or supporting bracing to prevent movement of the pipe bedding and the backfill. Trench boxes, moveable sheeting, shoring or plates shall not be allowed to extend below the top of the pipe. If trench boxes, moveable sheeting, shoring or plates have been installed below the top of the pipe, they shall be moved slowly taking care not to disturb pipe, bedding, or backfill. As trench boxes, moveable sheeting, shoring or plates are moved, pipe bedding shall be placed to fill any voids created and the backfill shall be re-compacted to provide uniform side support for the pipe.

3.5 JOINTING PVC PIPE (PUSH ON TYPE)

A. Joints shall be made in strict accordance with the manufacturer’s instructions. Pipe shall be laid with bell ends looking ahead (upgradient of the spigot end). A rubber

gasket shall be inserted in the groove of the belled end and the joint surfaces cleaned and lubricated. The plain edge of the pipe to be entered shall then be inserted in alignment with the bell of the pipe to which is it to be jointed and pushed home with a come-along or by other means. Check that the reference mark on the spigot is flush with the end of the bell.

3.6 JOINTING PVC SEWER PIPE AND FITTINGS

A. PVC sewer pipe and fittings shall be jointed in accordance with the recommendations of the latest ASTM standards and detailed instructions of the manufacturer. The pipe manufacturer shall furnish information and supervise the installation of at least the first five joints.

B. All manhole connections shall be as shown on the Drawings except that concrete and mortared connections shall be equipped with an integral o-ring or other sealant such that a positive watertight seal is established.

3.7 SERVICE CONNECTIONS

A. Service connections shall be installed at a minimum slope of 2% at the locations and to the limits determined by the Engineer in the field. In each case the end shall be capped, backed with a #2 reinforcing rod welded to a 6 inch x 6-1/4 inch steel plate extending to 6 inches below the finished ground surface as shown on the Drawings.

B. Service connections shall be 8 in. diameter PVC unless otherwise shown on the Drawings.

C. Service connections shall be made at a point 10 feet outside the foundation of the building in accordance with the Uniform Plumbing Code. If the existing building surface is in structurally deficient condition or constructed of a material not approved by the plumbing inspector, the Contractor shall stop work immediately and contact the Engineer.

3.8 INSTALLATION - MANHOLES

A. In accordance with Section 330513 – MANHOLES AND STRUCTURES

3.9 FIELD QUALITY CONTROL

A. Refer to Sections 014000 - QUALITY REQUIREMENTS, 017300 - EXECUTION REQUIREMENTS, and 017700 - CLOSEOUT PROCEDURES.

B. Perform test on site sanitary sewage system in accordance with municipal standards.

C. Request inspection by Engineer prior to and immediately after placing bedding and piping. Provide minimum 24 hours notice. The Board of Health will inspect all work prior to issuing its approval. The Board of Health shall be given a minimum of 24 hours

advance notice when requesting an inspection. The Contractor shall comply with all inspection requirements of the Town of Framingham.

D. Compaction Testing: In accordance with ASTM D1557.

E. When tests indicate Work does not meet specified requirements, remove work, replace and retest.

F. Frequency of Compaction Tests: As directed by Engineer.

3.10 PROTECTION OF FINISHED WORK

A. Protect pipe and aggregate cover from damage or displacement until backfilling operation is in progress.

3.11 TESTING (GRAVITY PIPELINES)

A. Deflection testing of pipe shall be specified as follows:

1. Pipe deflection measured not less than 90 days after the backfill has been completed as specified shall not exceed 5%. Deflection shall be computed by multiplying the amount of deflection (nominal diameter less minimum diameter when measured) by 100 and dividing by the nominal diameter of the pipe.
2. Deflection shall be measured by a rigid mandrel (Go/No Go) device cylindrical in shape with a minimum of nine or ten evenly spaced arms or prongs. Drawings of the mandrel with complete dimensions shall be submitted to the Engineer for each diameter of pipe to be tested. The mandrel shall be hand pulled through all sewer lines.
3. Any section of sewer not passing the mandrel shall be uncovered at no additional cost to the Owner and the bedding and backfill replaced to prevent excessive deflection. Repaired pipe shall be retested at no additional cost to the Owner. Retested pipe shall not deflect more than 5%.

B. Low pressure air testing of pipe shall be specified as follows:

1. For making the low-pressure air tests, use equipment specifically designed and manufactured for the purpose of testing sewer pipelines using low-pressure air. The equipment shall be provided with an air regulator valve or air safety so set that the internal air pressure in the pipeline cannot exceed 8 psig.
2. The leakage test using low pressure air shall be made on each manhole-to-manhole section of pipelines after placement of the backfill.
3. Pneumatic plugs shall have a sealing length equal to or greater than the diameter of the pipe to be tested. Pneumatic plugs shall resist internal test pressures without requiring external bracing or blocking.
4. All air used shall pass through a single control panel.
5. Low-pressure air shall be introduced into the sealed line until the internal air pressure reaches 4 psig greater than the minimum pressure exerted by the groundwater that may be above the invert at the pipe at the time of the test. However, the internal air pressure in the sealed line shall not be allowed to

exceed 8 psig. When the maximum pressure exerted by the groundwater is greater than 4 psig, conduct only an infiltration test, as specified below.

6. Testing shall be in accordance with the requirements of ASTM F1417-92. The following italicized text contains selected text from ASTM F1417 (Gravity Sewer Lines).

- *The section of the line to be tested is plugged. Air, at low pressure, is introduced into the plugged line. The line passes the test if the rate of air loss, as measured by pressure drop, does not exceed a specified amount in a specified time.*
- *Pressure drop may be determined by using Table 1 or calculated by use of the formulas below.*

TABLE 1: MINIMUM SPECIFIED TIME REQUIRED FOR A 0.5 PSIG PRESSURE DROP FOR SIZE AND LENGTH OF PIPE INDICATED FOR Q = 0.0015 (NOTE-CONSULT WITH PIPE AND APPURTENANCE MANUFACTURER FOR MAXIMUM TEST PRESSURE FOR PIPE SIZE GREATER THAN 30 IN. IN DIAMETER.)

Pipe Diameter	Minimum Time, min:sec	Length for Min. Time, ft	Time for Longer Length, s	Specification Time for Length (L) Shown, min:s							
				100	150 ft	200 ft	250 ft	300 ft	350 ft	400 ft	450 ft
4	1:53	597	0.190 L	1:53	1:53	1:53	1:53	1:53	1:53	1:53	1:53
6	2:50	398	0.427 L	2:50	2:50	2:50	2:50	2:50	2:50	2:51	3.12
8	3:47	298	0.760 L	3:47	3:47	3:47	3:47	3:48	4:26	5.04	5.42
10	4:43	239	1.187 L	4:43	4:43	4:43	4:57	5:56	6:55	7.54	8.54
12	5:40	199	1.709 L	5:40	5:40	5:42	7:08	8:33	9:58	11.24	12.50
15	7:05	159	2.671 L	7:05	7:05	8:54	11:08	13:21	15:35	17.48	20.02
18	8:30	133	3.846 L	8:30	9:37	12:49	16:01	19:14	22:26	25.38	28.51
21	9:55	114	5.235 L	9:55	13:05	17:27	21:49	28:11	30:32	34.54	39.16
24	11:20	99	6.837 L	11:2	17:57	22:48	28:30	34:11	39:53	45.35	51.17
27	12:45	88	8.653 L	14:2	21:38	28:51	36:04	43:18	50:30	57.42	64.54
30	14:10	80	10.683 L	17:4	26:43	35:37	44:31	53:25	62:19	71.13	80.07
33	15:35	72	12.926 L	21:3	32:19	43:56	53:52	64:38	75:24	86.10	96.57
36	17:00	66	15.384 L	25:3	38:28	51:17	64:06	76:55	89:44	102.3	115.2

- *Calculate all test times by the following formula: T= 0.085 DK/Q, where: T = shortest time allowed for the air pressure to drop 1.0 psig, K = 0.000419 DL but not less than 1.0, Q = leak rate in cubic feet/minute/square feet of internal surface = 0.0015 CFM/SF, D = measured average inside diameter of sewer pipe (see Method D 2122 and Practice D 3567), in., and L = length of test section, ft.*

- *Table 1 contains the specified minimum times required for a 1.00 psig pressure drop from a starting pressure of 3.5 psig to a final pressure of 2.5 psig using a leakage rate of 0.0015 $ft^3/min/ft^2$ of internal surface.*

C. Infiltration testing of pipe shall only be carried out when the depth of groundwater is so great that low pressure air testing cannot be adequately performed; otherwise low pressure air testing shall be performed as specified above. The procedure for infiltration testing of pipe is as follows:

1. For making the infiltration tests, underdrains, if used, shall be plugged and other groundwater drainage shall be stopped to permit groundwater to return to its normal level insofar as practicable.
2. Upon completion of a section of the sewer, dewater it and conduct a satisfactory test to measure the infiltration for at least 24 hours. The amount of infiltration, including manholes, tees, and connections, shall not exceed 200 gallons per inch diameter per mile of sewer per 24 hours.

END OF SECTION

SECTION 33 41 00

STORM UTILITY DRAINAGE PIPING

PART 1 - GENERAL

1.1 GENERAL PROVISIONS

A. Attention is directed to the CONTRACT AND GENERAL CONDITIONS and all Sections within DIVISION 01 - GENERAL REQUIREMENTS which are hereby made a part of this Section of the Specifications.

B. The General Contractor shall either perform the work of this section with its own forces or shall subcontract such work to a subcontractor who will furnish a performance and payment bond for the complete scope of work and listing the Owner as the co-oblige. Such bond shall be procured from a surety that is currently licensed to do business in Massachusetts and is currently listed on the United States Treasure Department circular 570. A copy of such bond shall be submitted to the Owner's Project Manager for approval and shall be in place prior to the subcontractor commencing any work on the project.

1.2 SCOPE OF WORK

A. Furnish all labor, materials, equipment and incidentals required to install high density polyethylene pipe, fittings and appurtenances as indicated and as specified herein.

1.3 RELATED WORK

A. Section 310000 - EARTH MOVING

B. Section 330513 - MANHOLES AND STRUCTURES

1.4 SUBMITTALS

A. Submit the name of the pipe and fitting suppliers and Shop Drawings, showing layout details of reinforcement, joint, method of manufacture, and installation of pipe, specials, and fittings for the entire job.

B. Prior to each shipment of pipe submit certified test reports and a notarized affidavit stating that all pipe meets requirements of ASTM D1238 & ASTM D1505.

1.5 REFERENCED STANDARDS

A. American Society for Testing and Materials (ASTM):

1. ASTM D1238 - Standard Test Method for Flow Rates of Thermoplastics by Extrusion Plastometer.

2. ASTM D1248 - Standard Specification for Polyethylene Plastics Molding and Extrusion Materials.
3. ASTM D1505 - Standard Test Method for Density of Plastics by the Density-Gradient Technique.
4. ASTM D2657 - Standard Practice for Heat Fusion Joining of Polyolefin Pipe and Fittings.
5. ASTM D2837 - Standard Test Method for Obtaining Hydrostatic Design Basis for Thermoplastic Pipe Materials.
6. ASTM D3350 - Standard Specification for Polyethylene Plastic Pipe and Fittings Materials
7. ASTM F714 - Standard Specification for Polyethylene (PE) Plastic Pipe and (SDR-PR) Based on Outside Diameter.

B. Where reference is made to one of the above standards, the revision in effect at the time of the bid opening shall apply.

PART 2 - PRODUCTS

2.1 HIGH DENSITY POLYETHYLENE (HDPE) PIPE – SINGLE PIPE SYSTEM

A. High Density Polyethylene (HDPE) Pipe resins shall be high molecular weight, high density polyethylene with a cell classification number of 424420C in accordance with ASTM D3350.

B. HDPE shall have a smooth interior and annular exterior corrugations, 12 inch through 60 inch piping shall meet ASTM F2648 and shall be either AASHTO Type ‘S’ or Type ‘D’.

C. Pipe shall be joined using a bell & spigot joint meeting ASTM F2648. The joint shall be soil-tight and gaskets, when applicable, shall meet the requirements of ASTM F477. Gaskets shall be installed by the pipe manufacturer and covered with a removable wrap to ensure the gasket is free from debris. A joint lubricant supplied by the manufacturer shall be used on the gasket and bell during assembly.

D. Pipe shall support an HS-20 live load with a maximum deflection of 5% of the minimum pipe diameter.

E. Pipe shall be furnished in standard laying lengths not exceeding 25 feet.

F. All single pipe high density polyethylene pipe and fittings shall be made from the same resin.

G. Pipe shall comply with the requirements for test methods, dimensions and markings found in AASHTO Designations M252 and M294.

2.2 CONCRETE PIPE AND FITTINGS

A. Reinforced-Concrete sewer pipe and fittings shall be ASTM C76 or ASTM C655.

1. Bell-and-spigot ends and rubber gasketed joints with ASTM C443.
2. Class III pipe shall be used for typical installations.

3. Class V pipe shall be used where cover is 2 ft. or less, where indicated on the plans, or where recommended by the manufacturers.

2.3 POLYVINYL CHLORIDE (PVC):

A. Pipe and Fittings, Type PSM PVC Pipe, shall conform to ASTM D3034, Type PSM, SDR 35. Pipe and fittings shall have elastomeric gasket joints providing a watertight seal when tested in accordance with ASTM D 3212. Gaskets shall conform to ASTM F 477. Solvent welded joints shall not be permitted.
B. Use for underdrains only.

2.4 UNDERGROUND PIPE MARKERS

A. Manufacturers:

1. Any manufacturers of such products shall be considered.
2. Substitutions: Refer to Section 016000 - PRODUCT REQUIREMENTS.

B. Plastic Ribbon Tape: Bright colored, imprinted with "Storm Drain Line" in large letters, minimum 6 inches wide by 4 mil. thick, manufactured for direct burial service.

2.5 PIPE IDENTIFICATION

A. The following shall be continuously indent printed on the pipe and spaced at intervals not exceeding 5 feet.

1. Name and/or trademark of the pipe manufacturer.
2. Nominal pipe size.
3. Dimension ratio.
4. The letters PE followed by the polyethylene grade in accordance with ASTM D1248, followed by the hydrostatic design basis in 100's of psi., e.g., PE 3408.
5. Manufacturing standard reference, e.g., ASTM F714.
6. A production code from which the date and place of manufacture can be determined.

PART 3 - EXECUTION

3.1 INSTALLATION - PIPE

A. High Density Polyethylene (HDPE) Pipe shall be installed in accordance with the instruction of the manufacturer, as indicated and as specified herein.

B. Polyvinyl Chloride (PVC) Pipe shall be installed in accordance with the instruction of the manufacturer, as indicated and as specified herein.

B. Pipe shall be laid to lines and grade as indicated with bedding and backfill as indicated.

C. When laying is not in progress, the open ends of the pipe shall be closed by fabricated plugs, or by other approved means. All plugs shall be OD fitting type plugs. No plugs will be allowed that require insertion of the plug into the pipe.

D. Pipe shall be stored on clean level ground to prevent scratching or gouging. The handling of the pipe shall be in such a manner that the pipe is not damaged by dragging it over sharp and cutting objects. The maximum allowable depth of cuts, scratches, or gouges on the exterior of the pipe is 10 percent of the wall thickness. The interior pipe surface shall be free of cuts, gouges, or scratches.

E. Sections of pipe with cuts, scratches, or gouges deeper than allowed shall be removed completely and replaced and the ends of the pipeline rejoined at no additional cost to the City of Framingham.

F. Single pipe systems shall be jointed by the method of thermal butt fusion, as outlined in ASTM D2657. All joints shall be made in strict compliance with the manufacturer's recommendations.

G. All HDPE pipe must be at the temperature of the surrounding soil at the time of backfilling and compaction.

3.2 TESTING

A. HDPE storm drain pipe installations shall be mandrel tested to ensure that the pipe has maintained a circular shape in cross section throughout installation. The pipe shall remain within 5% of a true circular shape. Pipe deflection beyond 5% shall be repaired by reinstallation.

3.3 CLEAN UP

A. Prior to Final Completion of the Work, thoroughly clean all the new pipelines and remove all dirt, stones, and pieces of wood or other materials.

END OF SECTION

SECTION 33 49 23

STORM DRAINAGE RETENTION STRUCTURES

PART 1 GENERAL

1.01 GENERAL PROVISIONS

A. Attention is directed to the CONTRACT AND GENERAL CONDITIONS and all Sections within DIVISION 01 - GENERAL REQUIREMENTS which are hereby made a part of this Section of the Specifications.

B. The General Contractor shall either perform the work of this section with its own forces or shall subcontract such work to a subcontractor who will furnish a performance and payment bond for the complete scope of work and listing the Owner as the co-oblige. Such bond shall be procured from a surety that is currently licensed to do business in Massachusetts and is currently listed on the United States Treasure Department circular 570. A copy of such bond shall be submitted to the Owner's Project Manager for approval and shall be in place prior to the subcontractor commencing any work on the project.

1.02 SCOPE OF WORK

A. Furnish all labor, materials, equipment and incidentals required to install high density polyethylene groundwater recharge chambers, fittings, manifolds, and appurtenances as indicated and as specified herein.

1.03 RELATED WORK

A. Section 31 00 00, EARTHWORK

B. Section 33 05 13, MANHOLES AND STRUCTURES

C. Section 33 41 00, STORM UTILITY DRAINAGE PIPING.

1.04 SUBMITTALS

A. Submit the name of the recharge unit and fitting suppliers and Shop Drawings, showing layout details of reinforcement, joint, method of manufacture, and installation of recharge units, specials, and fittings for the entire job.

B. Prior to each shipment of recharge units submit certified test reports and a notarized affidavit stating that all recharge units meet requirements of ASTM D1238 & ASTM D1505.

1.05 REFERENCED STANDARDS

A. American Society for Testing and Materials (ASTM)

1. ASTM D1238 – Standard Test Method for Flow Rates of Thermoplastics by Extrusion Plastometer.
2. ASTM D1248 - Standard Specification for Polyethylene Plastics Molding and Extrusion Materials.
3. ASTM D1505 - Standard Test Method for Density of Plastics by the Density-

Gradient Technique.

4. ASTM D2657 - Standard Practice for Heat Fusion Joining of Polyolefin Recharge units and Fittings.
5. ASTM D2837 - Standard Test Method for Obtaining Hydrostatic Design Basis for Thermoplastic Recharge units Materials.
6. ASTM D3350 - Standard Specification for Polyethylene Plastic Recharge units and Fittings Materials
7. ASTM F714 - Standard Specification for Polyethylene (PE) Plastic Recharge units and (SDR-PR) Based on Outside Diameter.

B. Where reference is made to one of the above standards, the revision in effect at the time of the bid opening shall apply.

PART 2 PRODUCTS

2.01 HIGH DENSITY POLYETHYLENE RECHARGE UNITS

A. High Density Polyethylene (HDPE) recharge unit resins shall be high molecular weight, high density polyethylene with a cell classification number of 345434C in accordance with ASTM D3350.

B. All polyethylene recharge units shall meet the requirements of ASTM F714.

C. The recharge units shall be jointed with, butt head fusion joints. All joints shall be made in strict compliance with the manufacture's recommendations.

D. Recharge units shall be furnished in standard laying lengths not exceeding 25 ft.

E. All high density polyethylene recharge units and fittings shall be made from the same resin.

2.02 RECHARGE UNITS IDENTIFICATION

A. The following shall be continuously indent printed on the recharge units.

1. Name and/or trademark of the recharge unit manufacturer.
2. Nominal size.
3. Dimension ratio.
4. The letters PE followed by the polyethylene grade in accordance with ASTM D1248, followed by the hydrostatic design basis in 100's of psi, e.g., PE 3408.
5. Manufacturing standard reference, e.g., ASTM F714.
6. A production code from which the date and place of manufacture can be determined.

2.03 CHAMBER PARAMETERS

A. The chamber will be vacuum thermoformed of high molecular weight high density polyethylene (HMWHDPE).

B. The chamber will be arched in shape.

C. The chamber will be open-bottomed.

D. The chamber will be joined using an interlocking overlapping rib method. Connections must be fully shouldered overlapping ribs, having no separate couplings or separate end walls.

E. The nominal chamber dimensions of the recharge units shall be capable of storing the required volume for recharge in the area at the depths noted on the plans.

F. The chambers shall be fitted with either an external or an internal manifold to evenly distribute the stormwater. If internal manifolds are used the chambers will have two side portals to accept feed connectors for the internal manifold.

G. The nominal dimensions of each internal manifold side portal will be manufacturer's specifications.

H. The nominal chamber dimensions of an external manifold will be per manufacturer's recommendations.

I. The chambers will have discharge holes bored into the sidewalls of the unit's core to promote lateral conveyance of water.

J. The endwall of the chamber, when present, will be an integral part of the continuously formed unit.

K. The starter unit must be formed as a whole chamber having one fully formed integral endwall and one partially formed integral endwall.

L. The intermediate unit must be formed as a whole chamber having one fully open endwall and one partially formed integral endwall.

M. The end unit must be formed as a whole chamber having one fully formed integral endwall and one fully open end wall and having no separate end plates or end walls.

N. Internal manifold feed connectors must be formed as a whole chamber having two open end walls and having no separate end plates or separate end walls. The unit will fit into the side portals of the chamber and act as cross feed connections.

O. Chambers must have horizontal stiffening flex reduction steps between the ribs.

P. The chamber will be designed to withstand AASHTO H-25 load rating when installed according to manufacturer's recommended installation instructions.

Q. Heavy duty units are designated by a colored stripe formed into the part along the length of the chamber.

R. The chamber will have a raised integral cap at the top of the arch in the center of each unit to be used as an optional inspection port or clean out.

S. The units may be trimmed to custom lengths by cutting back to any corrugation on the large rib end.

PART 3 EXECUTION

3.01 GENERAL

A. High Density Polyethylene (HDPE) recharge units hall be installed in accordance with the instruction of the manufacturer, as indicated and as specified herein.

B. Recharge units shall be laid to lines and grade as indicated with bedding and backfill as indicated.

C. When laying is not in progress, the open ends of the recharge units shall be closed by fabricated plugs, or by other approved means. All plugs shall be OD fitting type plugs. No plugs will be allowed that require insertion of the plug into the recharge units.

D. Recharge units shall be stored on clean level ground to prevent scratching or gouging. The handling of the recharge units shall be in such a manner that the recharge units is not damaged by dragging it over sharp and cutting objects. The maximum allowable depth of cuts, scratches, or gouges on the exterior of the recharge units is 10 percent of the wall thickness. The interior of the recharge unit surfaces shall be free of cuts, gouges, or scratches.

E. Sections of recharge units with cuts, scratches, or gouges deeper than allowed shall be removed completely and replaced and the ends of the recharge units rejoined at no additional cost.

F. Single recharge units systems shall be jointed by the method of thermal butt fusion, as outlined in ASTM D2657. All joints shall be made in strict compliance with the manufacturer's recommendations.

G. All HDPE recharge units must be at the temperature of the surrounding soil at the time of backfilling and compaction.

3.02 INSTALLATION

A. Installing contractors are expected to comprehend and use the most current installation instructions prior to beginning a system installation.

B. Contact manufacturer at least thirty days prior to system installation to arrange for a pre-construction meeting.

C. All system designs must be certified by a registered professional engineer licensed in the Commonwealth of Massachusetts.

D. Use these installation instructions as a guideline only. Actual design may vary. Refer to approved construction drawings for job-specific details. Be sure to follow the engineer's drawings as your primary guide.

E. System cover/backfill requirements will vary based on chamber model. Please refer to Engineer's drawings.

F. Any discrepancies with the system sub-grade soil's bearing capacity must be reported to the Engineer.

G. Filter fabric must be used as specified in the Contract drawings.

H. Manufacturer requires the contractor to refer to the manufacturer's installation instructions, concerning vehicular traffic. Responsibility for preventing vehicles that exceed the manufacturer's requirements from traveling across or parking over the chamber system lies solely with the contractor throughout the entire site construction process.

I. The placement of warning tape, temporary fencing, and/or appropriately located signs is required. Acceptable vehicle loading criteria is HS-20 loading.

J. UNDERGROUND PIPE MARKERS

Manufacturers:
1. Any manufacturers of such products shall be considered.
2. Substitutions: Refer to Section 01 60 00 - Product Requirements.
3. Plastic Ribbon Tape: Bright colored, imprinted with "STORM" in large letters, minimum 6 in. wide by 4 mil. thick, manufactured for direct burial service.
4. Trace Wire: Magnetic detectable conductor, brightly colored plastic covering, imprinted with "STORM" in large letters.

K. Erosion and sediment-control measures must meet state and local codes and the design engineer's specifications throughout the entire site construction process.

L. Underground recharge systems must be designed and installed in accordance with the manufacturer's minimum requirements.

3.03 CLEANING

A. Prior to Final Completion of the Work, thoroughly clean all the new recharge units and remove all dirt, stones, and pieces of wood or other materials.

END OF SECTION

DO NOT REMOVE
THIS PAGE INTENTIONALLY LEFT BLANK

APPENDIX A

LEED SCORECARD

DO NOT REMOVE
THIS PAGE INTENTIONALLY LEFT BLANK

LEED v4 for BD+C: Schools

Project Checklist

Project Name: Fuller Middle School
Date: 11/22/2019

The Green Engineer
Sustainable Design Consulting

Y	?	N			
		1	Credit	Integrative Process	1

4	1	10	Location and Transportation	15
		x	Credit	LEED for Neighborhood Development Location	15
1			Credit	Sensitive Land Protection	1
1		1	Credit	High Priority Site	2
2		3	Credit	Surrounding Density and Diverse Uses	5
		4	Credit	Access to Quality Transit	4
		1	Credit	Bicycle Facilities	1
		1	Credit	Reduced Parking Footprint	1
	1		Credit	Green Vehicles	1

5	2	5	Sustainable Sites	12
Y			Prereq	Construction Activity Pollution Prevention	Required
Y			Prereq	Environmental Site Assessment	Required
1			Credit	Site Assessment	1
		2	Credit	Site Development - Protect or Restore Habitat	2
1			Credit	Open Space	1
1		2	Credit	Rainwater Management	3
	2		Credit	Heat Island Reduction	2
1			Credit	Light Pollution Reduction	1
		1	Credit	Site Master Plan	1
1			Credit	Joint Use of Facilities	1

5	0	7	Water Efficiency	12
Y			Prereq	Outdoor Water Use Reduction	Required
Y			Prereq	Indoor Water Use Reduction	Required
Y			Prereq	Building-Level Water Metering	Required
1		1	Credit	Outdoor Water Use Reduction	2
3		4	Credit	Indoor Water Use Reduction	7
		2	Credit	Cooling Tower Water Use	2
1			Credit	Water Metering	1

18	8	5	Energy and Atmosphere	31
Y			Prereq	Fundamental Commissioning and Verification	Required
Y			Prereq	Minimum Energy Performance	Required
Y			Prereq	Building-Level Energy Metering	Required
Y			Prereq	Fundamental Refrigerant Management	Required
5	1		Credit	Enhanced Commissioning	6
13	3		Credit	Optimize Energy Performance	16
		1	Credit	Advanced Energy Metering	1
		2	Credit	Demand Response	2
	1	2	Credit	Renewable Energy Production	3
	1		Credit	Enhanced Refrigerant Management	1
	2		Credit	Green Power and Carbon Offsets	2

4	0	9	Materials and Resources	13
Y			Prereq	Storage and Collection of Recyclables	Required
Y			Prereq	Construction and Demolition Waste Management Planning	Required
		5	Credit	Building Life-Cycle Impact Reduction	5
1		1	Credit	Building Product Disclosure and Optimization - Environmental Product Declarations	2
		2	Credit	Building Product Disclosure and Optimization - Sourcing of Raw Materials	2
1		1	Credit	Building Product Disclosure and Optimization - Material Ingredients	2
2			Credit	Construction and Demolition Waste Management	2

7	7	2	Indoor Environmental Quality	16
Y			Prereq	Minimum Indoor Air Quality Performance	Required
Y			Prereq	Environmental Tobacco Smoke Control	Required
Y			Prereq	Minimum Acoustic Performance	Required
2			Credit	Enhanced Indoor Air Quality Strategies	2
2	1		Credit	Low-Emitting Materials	3
1			Credit	Construction Indoor Air Quality Management Plan	1
1		1	Credit	Indoor Air Quality Assessment	2
	1		Credit	Thermal Comfort	1
1	1		Credit	Interior Lighting	2
	3		Credit	Daylight	3
	1		Credit	Quality Views	1
		1	Credit	Acoustic Performance	1

5	1	0	Innovation	6
4	1		Credit	Innovation	5
1			Credit	LEED Accredited Professional	1

1	1	2	Regional Priority	4
1			Credit	Regional Priority: EAc2 Optimize Energy Performance (20%/8 pts)	1
	1		Credit	Regional Priority: EAc5 Renewable Energy Production (5%/2 pts)	1
		1	Credit	Regional Priority: LTc4 / LTc5	1
		1	Credit	Regional Priority: SSc2 / MRc1	1

49	20	41	TOTALS	Possible Points:	110

Certified: 40 to 49 points, **Silver:** 50 to 59 points, **Gold:** 60 to 79 points, **Platinum:** 80 to 110

DO NOT REMOVE
THIS PAGE INTENTIONALLY LEFT BLANK

APPENDIX B

CODE REPORT

DO NOT REMOVE
THIS PAGE INTENTIONALLY LEFT BLANK

Fire Protection and Life Safety Code Compliance Strategy

FRAMINGHAM FULLER MIDDLE SCHOOL
FRAMINGHAM, MA

Prepared For:

Jonathan Levi Architects
266 Beacon Street
Boston, MA 02116

Prepared By:

101 Longwater Circle, Suite 203
Norwell, MA 02061
Phone: 781.878.3500
Fax: 781.878.3551

SUBMITTED: NOVEMBER 14, 2019

100% Construction Documents

Table of Contents

DOCUMENT HISTORY **4**

PURPOSE **4**

APPLICABLE CODES AND REQUIREMENTS **5**

PROJECT DESCRIPTION **5**

GENERAL OPERATING ASSUMPTIONS **5**

NEW CONSTRUCTION- CODE COMPLIANCE APPROACH **6**

OCCUPANCY CLASSIFICATION 6
OCCUPANCY SEPARATIONS 6

BUILDING CONSTRUCTION **7**

CONSTRUCTION TYPE 7
FIRE RESISTANCE RATING 7
Fire Resistance Ratings of Structural Elements for Type IB Construction *8*
Roof Rating Approach *8*
EXTERIOR WALLS 9
Interior Finishes and Floor Finishes *10*
Interior Wall & Ceiling Finish Requirements by Occupancy *11*
Interior Floor Finish Requirements by Occupancy *11*
LABORATORY HAZARDOUS CHEMICAL STORAGE 11
Control Area Approach *11*
MSBC Table 414.2.2 Design and Number of Control Areas *12*
Fire Code Requirements for Hazardous Chemicals *12*
Most restrictive requirements NFPA 30 and NFPA 45- *13*
NFPA 45 Laboratory Installation Requirements *15*
NFPA 45 Requirements for Maximum Allowable Quantities of Flammable Liquids. *15*
NFPA 45 Instructional Laboratory classification *17*
Summary of the Maximum Allowable Quantities from IBC, NFPA 30 and NFPA 45 ..... *17*
PENETRATIONS OF DUCT AND AIR TRANSFER OPENINGS 18
MEP Shaft Enclosures *18*
Fire Dampers *18*
Smoke Dampers *19*
Combination Smoke/ Fire Dampers *19*
Through Penetration Protection *20*
Damper Exceptions *20*
Protected Vertical Openings *21*
ATRIUM DESIGN 21
STAGE DESIGN 22

MEANS OF EGRESS SYSTEM DESIGN **24**

GENERAL REQUIREMENTS 24
Occupant Load *24*
Arrangement of Means of Egress (MSBC Section 1007.1.1) *26*
Exit Capacities *26*
Exit Access Travel Distance (MSBC Section 1017) *27*
Dead End Corridor Limits (MSBC Section 1020.4) *28*
Exit Access Corridors (MSBC Section 1020) *28*
Exit Stair Discharge *28*
Doors (MSBC Section 1010) *29*
Exit signage (MSBC Section 1013) *29*
Means of Egress Lighting (MSBC Section 1008) *30*
SUMMARY OF FIRE PROTECTION FEATURES 31
AUTOMATIC SPRINKLER PROTECTION 31
STANDPIPES 32
FIRE ALARM 32
Manual Fire Alarm Pull Stations *32*
SMOKE CONTROL 32
EMERGENCY POWER 33

ELEVATOR PROVISIONS 33
PORTABLE FIRE EXTINGUISHERS 34
Actual Mounting Locations (2013 Edition NFPA 10) *34*
FIRE DEPARTMENT ACCESS 35
EMERGENCY RESPONDER RADIO COVERAGE 35

ACCESSIBILITY 36

GENERAL REQUIREMENTS 36

PLUMBING FIXTURES 39

CONCLUSION 41

APPENDIX A: SMOKE CONTROL BASIS OF DESIGN 42

DOCUMENT HISTORY

50% Schematic Design Fire Protection and Life Safety Code Compliance Strategy .....August 8, 2018
100% Schematic Design Fire Protection and Life Safety Code Compliance Strategy .....September 7, 2018
75% Design Development Fire Protection and Life Safety Code Compliance Strategy .....April 8, 2019
100% Design Development Fire Protection and Life Safety Code Compliance Strategy ..... May 13, 2019
50% Construction Document Fire Protection and Life Safety Code Compliance Strategy .....July 8, 2019
60% Construction Document Fire Protection and Life Safety Code Compliance Strategy .....August 9, 2019
90% Construction Document Fire Protection and Life Safety Code Compliance Strategy .....August 29, 2019
90% Construction Document Fire Protection and Life Safety Code Compliance Strategy ..... October 15, 2019
100% Construction Document Fire Protection and Life Safety Code Compliance Strategy .....November 14, 2019

This document "Concept Design Fire Protection and Life Safety Code Compliance Strategy" is intended for use by the design team and code officials for understanding the building design concept for the proposed Framingham Fuller Middle School located in Framingham, MA. This document contains the code basis for the building design, functionality of the egress system, fire protection recommendations, the smoke control system design concept, and a comprehensive code outline.

This document is a draft based on the building plans from Jonathan Levi Architects dated November 14, 2019. This document is a work in progress, will be updated as the design progresses and discussions/agreements with the Authorities Having Jurisdiction occur.

PURPOSE

The purpose of this report is to document and provide the code compliance strategy, including the framework for the fire protection and life safety concept, for the Framingham Fuller Middle School in Framingham, MA. This document will also identify design concepts that are not clearly addressed by the applicable building codes, which will require approval and or interpretation by the authorities having jurisdiction (AHJ).

APPLICABLE CODES AND REQUIREMENTS

The following codes are presently adopted in the State of Massachusetts:

- **Building** — Massachusetts State Building Code (MSBC), 9th Edition, which adopts and amends the 2015 International Building Code and the 2015 International Existing Building Code (IEBC).
- **Accessibility** — Massachusetts Architectural Access Board (MAAB), 521-CMR.
  2010 ADA Standards for Accessible Design
- **Electrical** — Massachusetts Electrical Code, 527 CMR, 12.00. The Massachusetts Electrical Code is an amended version of the 2017 National Electrical Code (NFPA 70).
- **Elevators** — Massachusetts Elevator Regulations, 524-CMR.
- **Energy** — 2015 Edition of the International Energy Conservation Code (IECC) as amended by the State of Massachusetts; Massachusetts Stretch Code
- **Fire Prevention** — 527 CMR Massachusetts Fire Prevention Code, which adopts and amends the 2015 edition of NFPA 1.
- **Mechanical** — International Mechanical Code, 2015 edition, as adopted and amended by the MSBC (Chapter 28).
- **Plumbing** — Massachusetts Fuel Gas and Plumbing Codes (248 CMR).
- **Other** — National Fire Protection Association (NFPA) Standards, as referenced by the MSBC and the MFPR.

PROJECT DESCRIPTION

Howe Engineers has prepared this document for the Framingham Fuller Middle School located in Framingham, MA. The proposed building will be a newly constructed, three (3) story building with a footprint area of approximately 64,780 square feet. The building contains primarily Group E Educational spaces for middle school students (6th to 8th grade), with accessory office and lounge spaces. There is a gymnasium and auditorium on the north side of the building that will be considered Group A-3 assembly spaces as public events will be held in these spaces.

This narrative addresses the requirements contained in the 9th edition of 780 CMR, The Massachusetts State Building Code (MSBC), which is an amended version of the 2015 International Building Code (IBC).

GENERAL OPERATING ASSUMPTIONS

The following general operating assumptions serve as the basis for the Life Safety and Fire Protection design and should be incorporated into the new facilities operations plan. It is the responsibility of the Owner/Operator to ensure that these assumptions are enforced:

- The materials used shall meet the interior finish requirements of the International Building, and NFPA 1.
- Hazardous materials and explosives are not permitted within the Building unless protected in accordance with the International Building and Fire Codes and approved by the Authority Having Jurisdiction.

NEW CONSTRUCTION- CODE COMPLIANCE APPROACH

OCCUPANCY CLASSIFICATION

The proposed Fuller School is classified as Mixed Use, containing Educational, Group E Occupancies, along with Assembly Group A and Business Group B Occupancies. The building serves as an educational building for students from the 6th through 8th grade containing primarily classroom spaces. There is a gymnasium and auditorium on the north side of the building which will likely hold events for the general public. As these spaces will hold events for the public, they must be considered Assembly spaces as they will accommodate occupants other than the students of the Fuller School. The occupancies in the building on the respective levels are as follows:

First Floor (Level of Exit Discharge)	**USE GROUP**
Classrooms / Lab Spaces	E
Gymnasium	A-4
Auditorium / Lounge Space	A-3
Office / Administration	B
Storage	S-1
MEP	S-2
Second Floor	**USE GROUP**
Classrooms	E
Office / Administration	B
Lounge / Breakout Space	A-3
Storage	S-1
MEP	S-2
Third Floor	**USE GROUP**
Classrooms	E
Office / Administration	B
Lounge / Breakout Space	A-3
Storage	S-1
MEP	S-2

OCCUPANCY SEPARATIONS

The Building contains a number of different occupancies, not included in the same occupancy group, within the building and is classified as Mixed-Use Occupancy in accordance with MSBC Section 508.1. Therefore, the building is required to comply with the requirements of either Section 508.3 (non-separated uses) or Section 508.4 (separated uses), or combinations of these sections. As the gymnasium, auditorium, and cafeteria on the first floor of the building will be used for public events, they must be considered assembly spaces. A nonseparated, mixed-use approach will be used for the design of the building to limit the required rated separations between occupancies. Refer to the Building Construction section below for minimum construction type necessary to allow for the application of the nonseparated mixed-use provisions.

BUILDING CONSTRUCTION

CONSTRUCTION TYPE

The Framingham Fuller School will be newly constructed using a nonseparated mixed-use approach. The building is three (3) stories in height, containing primarily Group A and E occupancies, with Group A Assembly spaces primarily consisting of the Gymnasium, Auditorium, and Cafeteria on the first floor. The building will be designed as Type IB fire resistive, non-combustible construction.

Under Type IB Construction, Group E occupancies are permitted to be six (6) stories in height with unlimited area per floor. Group A occupancies are permitted to be twelve (12) stories in height with unlimited area per floor. As the gymnasium, auditorium, and cafeteria will be used for public events, they are classified as Group A-3 spaces, while the balance of the school is classified as Group E educational use. The current design does not include occupancy separations as the building is permitted to be unlimited in area. As the building is 3-stories in height and permitted to have unlimited area, the current design is compliant.

In order to demonstrate compliance with the allowable building area requirements of MSBC Section 506, the sum of the ratios on each floor must be individually analyzed. This approach involves taking the area of each occupancy, and dividing this area by the allowable area of each occupancy on a floor-by-floor basis (MSBC Section 506.2.4). As the building is permitted to have unlimited area on each floor, the sum of the ratios calculation is not applicable.

As the building will be of Type IB construction, the stairs and shafts must be constructed of 2-hour construction as Type IB requires a 2-hour rated floor assembly.

FIRE RESISTANCE RATING

The fire-resistance rating requirements for Type IB construction can be found in MSBC Table 601. The fire-resistance ratings for the building structural elements are as follows:

Fire Resistance Ratings of Structural Elements for Type IB Construction

BUILDING STRUCTURAL ELEMENT	FIRE RESISTANCE RATING – TYPE IB
Structural Frame	
Including girders, beams and trusses (other than columns):	
Supporting a floor	2-hour
Supporting roof only	1-hour
Columns:	
Supporting a floor	2-hour
Supporting roof only	1-hour
Bearing Walls	
Exterior	2-hour
Interior Walls:	
Supporting more than one floor	2-hour
Supporting only roof	2-hour
Nonbearing Walls and Partitions	
Exterior *(not less than fire separation requirements)*	See Fire Separation
Interior *(not less than fire separation requirements)*	0-hours
Floor Construction	
Including supporting beams and joists	2-hour
Roof Construction	
Including supporting beams and joists:	
Less than 20' in height to lowest member	1-hours
20' or more in height to lowest member	0-hours

Roof Rating Approach

MSBC Table 601 (summarized above) governs the required fire resistance rating of structural members in Type IB construction. Both the proposed gymnasium and auditorium spaces are designed with high ceilings (in excess of 20-feet). Roof construction and associated secondary members for buildings of Type IB construction are required to be provided with a 1-hour fire resistance rating in accordance with MSBC Table 601. Table 601 provides that fire protection of structural roof members (including decking) is not required where every part of the roof construction is 20 feet or more above any floor immediately below. The 2018 IBC, though not applicable, provides guidance on the requirements outlined in Table 601. Table 601 permits the reduction in roof rating for all primary and secondary structural members where the roof is located more than 20 feet above the any floor immediately below. Primary structural frame is defined as follows:

[BG] PRIMARY STRUCTURAL FRAME. The primary structural frame shall include all of the following structural members:

1. The columns.
2. Structural members having direct connections to the columns, including girders, beams, trusses and spandrels.
3. Members of the floor construction and roof construction having direct connections to the columns.
4. Bracing members that are essential to the vertical stability of the primary structural frame under gravity loading shall be considered part of the primary structural frame whether or not the bracing member carries gravity *loads*.

As such, columns, structural roof members connecting directly to columns, and members needed for vertical stability of the building still require a 1-hour rating in accordance with Table 601, but other roof members are permitted to be non-rated in accordance with Footnote B of Table 601. Additionally, the 2018 IBC commentary provides further guidance on the intent of the code regarding the rating of primary and secondary roof members (below). As the proposed roof in both the auditorium and gymnasium is greater than 20 feet above the floor below, the design team has requested to utilize Footnote B of Table 601 to rate only the columns with none of the roof members located in or at the roof, including primary members, being rated.

> Note b applies to the construction of the roof and related secondary members in all types of construction. It allows these elements to be of unprotected construction when all parts of the roof construction are more than 20 feet (6096 mm) above any floor below. This footnote was revised for 2018 to clarify that this allowance applies to both the primary and secondary members of the roof structure. This alternative is applicable for all occupancy classifications except Groups F-1, H, M and S-1.

EXTERIOR WALLS

The MSBC regulates the fire resistance rating of exterior walls and the extent to which protected and unprotected openings are permitted in the exterior walls of facing buildings based on the fire separation distance to the lot line or to the center of the street (MSBC Table 602 and Table 705.8).

It should be noted that the Farley building is located approximately 40-feet away from the proposed Fuller School. The Farley building is constructed of non-combustible brick exterior walls. As such, the Fuller School is not provided with 100% open frontage on all sides. **The existing Farley Building was confirmed by JLA to be of masonry construction, with no exterior openings on the portions closest to the proposed Fuller School.**

In order to determine the allowable openings and rating of the exterior walls of the Fuller School, an assumed lot line must be developed between the Farley building and the Fuller School. Based on the masonry exterior walls of the Farley Building, it is assumed that the Farley Building is provided with 1-hour rated exterior walls. With no openings in the exterior wall, the Fuller School will be permitted to have unlimited openings and a non-rated exterior wall.

Fire Resistance Rating for Exterior Non-Loading-Bearing Walls

Based on Fire Separation Distance (IBC Table 602)

FIRE SEPARATION DISTANCE (Building wall to property line for each side of the building)	FIRE-RESISTANCE RATING (GROUP A, B, E, S-2)
Less than 5 feet	1-hour
Greater than or equal to 5 feet and less than 10 feet	1-hour
Greater than or equal to 10 feet and less than 30 feet	1-hour
Greater than or equal to 30 feet	0-hour

The required fire-resistance rating of exterior walls with a fire separation distance of greater than 10 feet must be rated for exposure to fire from the inside. The required fire-resistance rating of exterior walls with a fire separation distance of less than or equal to 10 feet must be rated for exposure to fire from both sides.

Maximum Area of Exterior Wall Openings

Based on IBC Table 705.8

Fire Separation Distance to Lot Line (feet)	Allowable Area of Opening (Sprinklered)
0 to less than 3	Not Permitted
3 to less than 5	15%
5 to less than 10	25%
10 to less than 15	45%
15 to less than 20	75%
20 to less than 25	No Limit
25 to less than 30	No Limit
30 or greater	No Limit

The Farley building is not provided with openings on the portions of the building that will face the proposed Fuller School. As mentioned above, the allowable openings of the Fuller School will be determined upon confirmation of the assumed lot line between the Fuller School and the Farley Building. The Fuller School will be permitted to have unlimited openings based on the 1-hour rated exterior walls and lack of openings in the Farley Building.

Fire Resistant Joint Systems

Joints installed in or between fire-rated walls, floors or floor/ceiling assemblies and roofs or roof/ceiling assemblies must be protected by an approved fire-resistant joint assembly having a rating equal to the rating of the wall, floor, or roof. Joint systems shall be tested in accordance with MSBC Section 715.0.

Listed and approved joint assemblies must be provided for all concealed locations where fire resistance rated assemblies form a joint.

Interior Finishes and Floor Finishes

Interior finishes in the building are required to meet the requirements of MSBC Section 803 for Interior Finish. Refer to the following tables for details. Interior finish applies to wall and ceiling finishes. Interior floor finish applies to floor coverings.

Interior Wall & Ceiling Finish Requirements by Occupancy

Sprinklered Building (Table 803.11)

USE GROUP	VERTICAL EXITS AND PASSAGEWAYS	EXIT ACCESS CORRIDORS	ROOMS AND ENCLOSED SPACES
A-3	A or B	A or B	A, B, or C
B / E	A or B	A, B, or C	A, B, or C
S	A, B, or C	A, B, or C	A, B, or C
Atrium	A or B	A or B	A or B

Interior Floor Finish Requirements by Occupancy

Interior floor finish and floor coverings must comply with IBC Section 804, unless the floor finish or covering material is of traditional type, such as wood, vinyl, linoleum, or terrazzo and resilient floor covering materials not comprised of fibers.

LABORATORY HAZARDOUS CHEMICAL STORAGE

Control Area Approach

The MSBC permits limited amounts of hazardous materials in a Use Group E Educational Occupancies. Under this approach, each floor of the building is permitted to have a certain number of Control Areas that are separated by fire resistance rated construction. The number of Control Areas and quantity of hazardous materials permitted on each floor varies based on the ease of fire department access to those given spaces.

The control areas should be separated from adjacent spaces by one (1)-hour fire resistance rated separations on the First through Third Floors (MSBC Table 414.2.2). The required fire resistance rating for the floors and their supporting construction is one (1) hour rated, which is satisfied by the 2-hour floors per Type IB Construction. Doors in the one (1)-hour control area separation should be rated for ¾-hour and doors (MSBC Table 716.5). It should be noted that unprotected vertical openings are not permitted in control areas, unless a sum of the ratios for chemical quantity is utilized.

Multiple control areas per floor can be provided if they are separated with fire resistance rated fire barrier. Table 414.2.2 of the MSBC (shown below) provides the requirements for control area design by floor level in the building. It should be noted that the number of control areas permitted, and the maximum allowable quantity of hazardous materials permitted per control area is reduced on floors above and below grade. Hazardous materials in storage and in use within this control area will be limited to the quantities specified in MSBC Table 307.1 (1) and (2). The quantity limits shown include an allowable increase for approved storage and automatic sprinkler protection.

MSBC Table 414.2.2 Design and Number of Control Areas

Floor Level		Percentage of the Maximum Allowable Quantity Per Control Area	Number of Control Areas Per Floor	Fire-Resistance Rating for Fire Barriers in Hours	Actual Control Areas Provided
Above	3	50	2	1	2
Grade	2	75	3	1	1
Plane	1	100	4	1	2

a. Percentages shall be of the maximum allowable quantity per control area shown in Tables 307.1(1) and 307.1(2) with all increases allowed in the notes to those tables

b. Fire barriers shall include walls and floors and supporting construction as necessary to provide separation from other portions of the building.

As can be seen from the table above, the First Floor is allowed to have four (4) control areas. Above grade floors are permitted to have fewer control areas and each control area above grade is permitted to store less hazardous materials.

Table 414.2.2 of the MSBC (shown above) provides the requirements for control area design by floor level in the building. The IBC has a defined threshold for when an occupancy must be classified as a Group H High Hazard occupancy. The maximum allowable quantity per control area for hazardous materials is found in IBC Section 307. **If the quantities from Table 307.1(1) are exceeded, the occupancy must be classified as a Group H occupancy.** Table 307.1(1) also indicates what Hazard Occupancy Group (Group H-1 through H-5) the building must be classified as when the quantities in Table 307.1(1) are exceeded.

As previously detailed in the report, an atrium connects the three (3) floors of the building. There should be multiple control areas per floor, which would require that rated walls separate the science classrooms from the balance of the building which entails 1-hour rated separations per NFPA 45. The science classrooms on Levels 1 and 2 are currently designed with fume hoods and will be used for chemical storage. The lab spaces on Level 3 are not provided with fume hoods but are expected to be used for chemical storage, thus will be protected as their own control area.

The design approach for control areas in the building incudes separating the two (2) science lab spaces on Levels 1, 2 and 3 from the balance of the building with 1-hour rated construction. As the floors of the building are 2-hour rated (based on Type IB Construction), each group of science classrooms can be considered its own control area as the classrooms will be separated from the spaces above and the spaces below by 2-hour construction, and separated from the adjacent spaces (including the atrium) by 1-hour rated construction. The lab approach has been reviewed with the City of Framingham Inspectional Services Department.

Fire Code Requirements for Hazardous Chemicals

The Massachusetts Fire Code 527 CMR adopts and amends the 2015 version of NFPA 1. Chapter 66 from the Massachusetts fire code contains the requirements for Flammable and combustible liquids. The Massachusetts fire code requires that the storage, handling and use of flammable or combustible liquids comply with NFPA

30. According to Section 1.5.3, a laboratory installation made in accordance with NFPA 45 is determined to be incompliance with NFPA 30.

66.1.1* The storage, handling, and use of flammable and combustible liquids, including waste liquids, as herein defined and classified, shall comply with this chapter; NFPA 30, *Flammable and Combustible Liquids Code*; Sections 60.1 through 60.4 of this *Code; and* NFPA 35 *Standards for the Manufacture of Organic Coatings, as applicable.*

Most restrictive requirements NFPA 30 and NFPA 45-

It is noted that NFPA 30 does not govern storage of liquids in a laboratory. In the open work area of the laboratory, the quantity of flammable liquid in the work area is governed by NFPA 45, which is the standard on fire protection for laboratories using chemicals.

The Massachusetts Fire Code Section 66.1.4 from the states that a laboratory that is installed in accordance with NFPA 45 is considered in compliance with the NFPA 1. Furthermore, it is noted that in accordance with Section 1.5.3 of NFPA 30, a laboratory that is installed in accordance with NFPA 45 is considered in compliance with NFPA 30.

As discussed above, Howe Engineers confirmed with the staff liaisons for NFPA 30 & NFPA 45 that a laboratory installed in compliance with NFPA 45 is considered to be in compliance with NFPA 30 per Section 1.5.3 of NFPA 30.

1.5.3 Installations made in accordance with the applicable requirements of the following standards shall be deemed to be in compliance with this code:

(1) NFPA 1, *Fire Code*
(2) NFPA 20, *Standard for the Installation of Stationary Pumps for Fire Protection*
(3) NFPA 30A, *Code for Motor Fuel Dispensing Facilities and Repair Garages*
(4) NFPA 31, *Standard for the Installation of Oil-Burning Equipment*
(5) NFPA 32, *Standard for Drycleaning Plants*
(6) NFPA 33, *Standard for Spray Application Using Flammable or Combustible Materials*
(7) NFPA 34, *Standard for Dipping, Coating, and Printing Processes Using Flammable or Combustible Liquids*
(8) NFPA 35, *Standard for the Manufacture of Organic Coatings*
(9) NFPA 36, *Standard for Solvent Extraction Plants*
(10) NFPA 37, *Standard for the Installation and Use of Stationary Combustion Engines and Gas Turbines*
(11) NFPA 45, *Standard on Fire Protection for Laboratories Using Chemicals*
(12) NFPA 99, *Health Care Facilities Code*
(13) NFPA *101*, *Life Safety Code*

Figure 1: NFPA 30 Section 1.5.3 states installations made in accordance with NFPA 45 are considered in compliance with NFPA 30.

66.1.4 Installations made in accordance with the applicable requirements of the following standards shall be deemed to be in compliance with this *Code*:

(1) NFPA 20, *Standard for the Installation of Stationary Pumps for Fire Protection*
(2) NFPA 30A, *Code for Motor Fuel Dispensing Facilities and Repair Garages*
(3) NFPA 31, *Standard for the Installation of Oil-Burning Equipment*
(4) NFPA 32, *Standard for Drycleaning Plants*
(5) NFPA 33, *Standard for Spray Application Using Flammable or Combustible Materials*
(6) NFPA 34, *Standard for Dipping, Coating, and Printing Processes Using Flammable or Combustible Liquids*
(7) NFPA 35, *Standard for the Manufacture of Organic Coatings*
(8) NFPA 36, *Standard for Solvent Extraction Plants*
(9) NFPA 37, *Standard for the Installation and Use of Stationary Combustion Engines and Gas Turbines*
(10) NFPA 45, *Standard on Fire Protection for Laboratories Using Chemicals*
(11) NFPA 99, *Health Care Facilities Code*
(12) NFPA *101*, *Life Safety Code*

Figure 2: NFPA 1 Section 66.1.4 states installations made in accordance with NFPA 45 are considered in compliance with NFPA 1.

NFPA 45 Laboratory Installation Requirements

In NFPA 45, Laboratories are classified as Laboratory Units A through D. Classification A representing a high hazard and D minimum fire hazard. The difference being the quantity of flammable and combustible liquids permitted to be utilized in the laboratory. Table 5.1.1 from NFPA 45 contains the requirements for the separation, maximum area and number of stories above and below grade that a lab can be located. This table is similar to the requirements contained in Table 414 of the International Building Code. (It is noted for reference that Table 5.1.1 has been updated in the 2015 version of NFPA 45 to clarify that Class C and D laboratories are permitted to be located in a story below grade.) In accordance with Table 5.1.1, fire separation is not required for Class C or D laboratories for Educational Buildings and be limited to 50% of the values shown in the table on the next page.

Table 5.1.1 Separation Requirements and Height Allowances for Laboratory Units

Laboratory Unit[a]	Area of Lab Unit	Fire Separation[b]	Permitted Stories Above Grade
A	≤929 m^2 (≤10,000 ft^2)	2 hours	1–3[c]
	>929 m^2 (>10,000 ft^2)	Not permitted[d]	
B	≤929 m^2 (≤10,000 ft^2)	1 hour	1–3[c]
	≤929 m^2 (≤10,000 ft^2)	2 hours	4–6[c]
	>929 m^2 (>10,000 ft^2)	Not permitted[d]	
C	Any size	Not required	1–3
	Any size	1 hour	4–6
	Any size	2 hours	Over 6
D	Any size	Not required	No limit

[a]Refer to Table 10.1.1 for laboratory unit classification.
[b]Separation in this table refers to separation from laboratory unit(s) to non-laboratory areas and/or separations from laboratory unit(s) of equal or lower hazard classification.
[c]Not allowed in structures below grade.
[d]Labs of this classification and size are not permitted.

NFPA 45 Requirements for Maximum Allowable Quantities of Flammable Liquids.

Chapter 10 from NFPA 45 contains the quantity limitations for flammable and combustible liquids. The maximum allowable quantities for flammable and combustible liquids can be found in Table 10.1.1(b) (See Table 10.1.1(b) below).

Table 10.1.1(b) Maximum Quantities of Flammable and Combustible Liquids in Laboratory Units Outside of Inside Liquid Storage Areas (U.S. Customary Units)

Laboratory Unit Fire Hazard Class	Flammable and Combustible Liquid Class[a]	Quantities in Use[a]		Quantities in Use and Storage[a]	
		Maximum Quantity[b] per 100 ft² of Laboratory Unit[c]	Maximum Quantity[b] per Laboratory Unit	Maximum Quantity[b] per 100 ft² of Laboratory Unit[c]	Maximum Quantity[b] per Laboratory Unit
		gal	gal	gal	gal
A (high fire hazard)	I	10	480	20	480
	I, II, and IIIA	20	800	40	1600
B[d] (moderate fire hazard)	I	5	300	10	480
	I, II, and IIIA	10	400	20	800
C[e] (low fire hazard)	I	2	150	4	300
	I, II, and IIIA	4	200	8	400
D[e] (minimal fire hazard)	I	1	75	2	150
	I, II, and IIIA	1	75	2	150

Note: For maximum container sizes, see Table 10.1.2.

[a]The maximum amount in use in open systems is limited to 10 percent of the quantities listed.

[b]See 4.2.2 for additional requirements for educational and instructional laboratories.

[c]The quantities per 100 ft² do not imply the quantities must be within that 100 ft² area; the quantities per 100 ft² are for calculation purposes to determine the total quantity allowed per laboratory work area and the total amount overall in the laboratory unit.

[d] Reduce quantities by 50 percent for B laboratory units located above the 3rd floor.

[e] Reduce quantities by 25 percent for C and D laboratory units located on the 4th–6th floors of a building and reduce quantities by 50 percent for C and D laboratory units located above the 6th floor.

- **The maximum allowable quantity permitted by Table 10.1.1 is based on a per 100 sq. ft. of laboratory area.**

NFPA 45 Instructional Laboratory classification

It is noted that NFPA 45 has a designation for Instructional Laboratories, which is classified as a lab that is used for educational purposes for college aged students. Experiments and testing in an Instructional Lab is typically conducted under supervision of a lab instructor.

> **3.3.31 Instructional Laboratory Unit.** A laboratory unit used for education past the 12th grade and before post-college graduate-level instruction for the purposes of instruction of six or more persons for four or more hours per day or more than 12 hours per week. Experiments and tests conducted in instructional laboratory units are under the direct supervision of an instructor. Laboratory units used for graduate or post-graduate research are not to be considered instructional laboratory units.

Summary of the Maximum Allowable Quantities from IBC, NFPA 30 and NFPA 45

Howe Engineers has provided the following table to summarize the various requirements for maximum allowable quantities from the International Building Code, NFPA 30 and NFPA 45. It is noted that NFPA 45 is most restrictive in the maximum allowable quantities for storage and use of flammable and combustible liquids. It is noted that the maximum allowable quantities in Table 1 assumed that the NFPA 45 maximum allowable quantities are not reduced due to the floor area of the laboratory. **The maximum allowable quantity permitted by NFPA 45 Table 10.1.1 is based on a per 100 sq. ft. of laboratory area and a reduction of 50% of the maximum allowable quantity listed in the table below per the Educational requirements**

Please refer to Table 1 below for the for maximum allowable quantities from the International Building Code, NFPA 30 and NFPA 45:

PENETRATIONS OF DUCT AND AIR TRANSFER OPENINGS

MEP Shaft Enclosures

A shaft is required when the duct penetrates two (2) or more floor/ceiling assemblies (MSBC Section 717.6.1). A shaft is not required in occupancies other than Groups I-2 and I-3, for a duct constructed of approved materials in accordance with the International Mechanical Code that penetrates not more than one (1) fire-resistance-rated floor/ceiling assembly (connecting only 2 stories), provided a listed fire damper is installed at the floor line or the duct is protected in accordance with MSBC Section 714.4 (MSBC Section 717.6).

MSBC Section 713.4 provides that shafts connecting less than four (4) stories, a 1-hour fire rated shaft enclosure is required. Shafts connecting four (4) or more stories require a fire-resistance rating of at least two (2) hours. Additionally, shaft enclosures must not have a fire resistance rating that is less than the rating of the floor that they are penetrating, but need not exceed two (2) hours. Openings in a shaft enclosure are required to be limited to those necessary for the purpose of the shaft (MSBC Section 713.8.1). Where shafts do not extend to the top or bottom of a building, adequate protection should be provided (MSBC Section 713.11 and Section 713.12). **It should be noted that as the building is of Type IB construction, shafts must be provided with a 2-hour fire resistance rating as they penetrate 2-hour rated floor assemblies.**

The building will have shafts at each bathroom suite to accommodate bathroom exhaust. Additionally, shafts will be located above the administrative suites to accommodate ductwork associated with these office areas. Finally, kiln exhaust and various fume hoods throughout the building will be provided with 2-hour rated shafts.

Fire Dampers

Fire dampers should have a fire resistance rating in accordance with the table below (MSBC Table 717.3.2.1). The actuation temperature of the actuating device should be approximately 50˚F above the normal temperature within the duct system (MSBC Section 717.3.3.1). If a fusible link is used, it should have a temperature rating not less than 160˚F (MSBC Section 717.3.3.1).

Fire Damper Rating

Type of Penetration	Minimum Fire Damper Rating
Less than 3-hour fire-resistance rated assemblies	1½ hours
3 hour or greater fire-resistance rated assemblies	3 hours

Fire dampers <u>are</u> required at locations where ducts or air transfer openings of an air distribution system penetrate fire resistance rated assemblies including the following:

- Fire barriers (MSBC Section 717.5.2);
- Shaft enclosures (MSBC Section 717.5.3);
- Fire partitions (MSBC Section 717.5.4);
- Horizontal assemblies (MSBC Section 717.6).

Smoke Dampers

Actuation of smoke dampers should be achieved in accordance with the table below (MSBC Section 717.3.3.2).

Smoke Damper Actuation Methods

Damper Location	Activation Method
Within a duct	Activation controlled by a smoke detector within 5-feet of the damper with no air outlets or inlets between the detector and the damper.
Above smoke barrier doors in a smoke barrier	Activation controlled by a spot type detector listed for releasing service should be installed on both sides of the smoke barrier door opening.
In an un-ducted opening in a wall	Activation controlled by a spot type detector listed for releasing service should be installed within 5-feet of the damper.
In a corridor wall	Activation controlled by smoke detector system in the corridor.
All	Where a total-coverage smoke detector system is provided within areas served by HVAC system, dampers are permitted to be controlled by the smoke detection system.

Smoke dampers are required at locations where ducts or air transfer openings of an air distribution system penetrate assemblies; including:

- Shaft enclosures (MSBC Section 717.5.3);
- Smoke barrier walls (MSBC Section 717.5.5);
- Horizontal Exits in fire walls (MSBC Section 717.5.1);
- Corridors (MSBC Section 717.5.4.1);
- Smoke Partitions (MSBC Section 717.5.7).
- Smoke-tight construction (MSBC Section 509.4.2)

It should be noted that smoke dampers are not required in smoke control systems where actuation of the damper would interfere with the operation of the smoke control system (717.5.3 Exception 3).

The table below reiterates smoke damper (SD) requirements and provides a number of exceptions in accordance with the MSBC.

Combination Smoke/ Fire Dampers

Where penetration of a smoke barrier is required to be provided with a fire damper, a combination fire and smoke damper equipped and arranged to be both smoke and heat responsive should be provided (MSBC 717.5). Combination smoke / fire dampers are required in the following location:

- Shaft penetrations (MSBC 717.5.3).

The table below reiterates combination smoke / fire damper requirements and provides a number of exceptions in accordance with the MSBC.

Through Penetration Protection

Penetrations into or through fire barriers, smoke barrier walls, fire partitions, floor/ceiling assemblies, or the ceiling membrane of a roof/ceiling assembly are required to be protected with an approved penetration or membrane penetration assembly (MSBC 708). See MSBC 708 for exceptions.

Damper Exceptions

The table below been developed by Howe Engineers in identifying where dampers are required and where exceptions exist.

	FD	SD	MSBC	Applicable SD, FD & SD/FD Damper Exceptions
Fire Barriers (including horizontal exits)[1]	Required	Not Required (NR)	717.5.2	Penetrations tested in accordance with ASTM E119 as part of a fire-resistance rated assembly **(FD)**. **[MSBC §717.5.2 Exception 1]**
				Ducts used as part of an approved smoke control system **(FD)**. **[MSBC 717.5.2 Exception 2]**
				Where fire barriers walls have a FRR of less than 1-hour and the following conditions apply: • The Building is protected throughout by automatic sprinklers; • Penetrations are limited to a ducted HVAC system conveying supply, return or exhaust air; • HVAC ducts are minimally 26 gage; • HVAC ducts are continuous from the AHU to the air outlet and inlet terminals **(FD)**. **[MSBC 717.5.2 Exception 3]**
Smoke Barriers[2]	NR	Required	717.5.5	Smoke dampers are not required where openings in ducts are limited to a single smoke compartment and ducts are constructed of steel **(SD)**. **[MSBC 717.5.5 Exception 1]**
Floor / Ceiling Assemblies	Required	NR	717.6.1	A duct is permitted to penetrate two floors or less with a fire damper at each floor provided it meets all the requirements in 717.6.1 Exception **(FD)**. **[MSBC 717.6.1 Exception]**
Shafts	Fire / Smoke Dampers Required		717.5.3	Steel exhaust sub ducts extending at least 22-inches vertically in an exhaust shaft provided there is a continuous upward airflow to the outside **(FD)**. **[MSBC 717.5.3 Exception 1.1]**
				Penetrations tested in accordance with ASTM E119 as part of a fire-resistance rated assembly **(FD)**. **[MSBC 717.5.3 Exception 1.2]**
				Ducts used as part of an approved smoke control system **(FD)**. **[MSBC 717.5.3 Exception 1.3]**
				Fire dampers and combination fire/smoke dampers are not required in kitchen and clothes dryer exhaust systems when installed in accordance with the International Mechanical Code **(SD/FD). [MSBC 717.5.3 Exception 5].** A duct that penetrates a fire-resistance rated floor/ceiling assembly that connects not more than 2 stories is permitted without a shaft enclosure, provided that a listed fire damper is installed at the floor line. **[MSBC 717.6.3].**
				Kitchen, clothes dryer, bathroom and toilet room exhaust openings are installed with steel exhaust sub ducts, having a minimum wall thickness of 0.187-inch (No. 26 gage), the sub ducts extend at least 22 inches vertically, and an exhaust fan providing continuous airflow to the outside is installed at the top of the shaft terminal. The exhaust fan should be provided with an uninterruptible power system for the first 15 minutes of loss of primary power **(SD)**. **[MSBC 717.5.3 Exception 2 for Group B and R occupancies only]**
Corridors	NR	Required	717.5.4	Ductwork has a minimum wall thickness of 0.019 inches and there are not openings that serve the corridor **(SD). [MSBC 717.5.4.1 Exception 2]**
Fire Partitions	Required	NR	717.5.4	Ductwork does not exceed 100 square inches, constructed of steel a minimum of 0.0217 inch in thickness, does not have openings that communicate with the corridor, installed above the ceiling, shall not terminate at a wall register in the fire resistance rated wall, 12-inch long by 0.060-inch-thick steel sleeve centered in each duct opening and secured by rectangle angles **(SD). [MSBC 717.5.4 Exception 3]**

[1] **Fire barriers within the building will include:** Occupancy separations (if provided) and special use room enclosures.
[2] **Smoke barriers within the building will include:** Fire service elevator lobby separations.

Protected Vertical Openings

Vertical openings through floors will be protected by fire-rated assemblies in accordance with MSBC Section 707.3. Vertical openings include exit stairs, elevator shafts, and mechanical shafts. Shafts and exit enclosures, other than *exit access stairways* complying with MSBC Section 1019.3 Item 4, will be enclosed with listed and approved shaft enclosure assemblies that provide a 2-hour fire-resistant rated noncombustible shaft assembly per MSBC Section 707.3, as the shafts will connect less than four (4) stories but penetrate 2-hour rated floor slabs (Type IB Construction). **Enclosed exit stairs within the building will be designed with 2-hour fire-rated separations.**

The floor openings requiring shaft protection will include, but are not limited to:

- Grease Ducts, Trash chutes and linen chutes
- Elevator Shafts
- Mechanical, electrical and plumbing shafts
- Exit Stairways, other than exit access stairways complying with MSBC Section 1019.3 Item 4.

Duct systems throughout the building that do not connect more than two (2) stories and are not required to be enclosed in shafts and are not required to be provided with smoke dampers, provided the annular space around the shaft is sealed with an approved material (MSBC, Section 714).

ATRIUM DESIGN

The current Fuller School design includes a three (3) story opening in the center of the building, with numerous breakout spaces within the opening. As the opening connects more than two (2) stories, the space is considered an atrium and must be designed in accordance with MSBC Section 404. Atriums are only permitted to be installed in buildings provided with approved automatic sprinkler protection (MSBC 404.3). **The design for the smoke control system includes 240,000 CFM of mechanical exhaust through multiple exhaust points spaces between Levels 2 and 3. Louvers and doors will be provided on Levels 1, 2, and 3 to supply the make-up air for the smoke control system. It should be noted that the louvers on the exterior of the building are not considered dampers, thus are not required to be listed in accordance with UL 555. Th**

Section 404.5 requires a smoke control system to be installed in accordance with MSBC Section 909. The smoke control system can either be designed using natural or mechanical-ventilation but will require and engineering rational analysis to ensure adequate system performance. Equipment for the smoke control system must be provided with standby power. **The atrium will be provided with a smoke control system utilizing mechanical exhaust. Refer to Appendix A for the Smoke Control Rational Analysis report drafted by Howe Engineers for further clarification on the system design.**

Section 404.6 requires atrium spaces to be separated from adjacent spaces by a 1-hour fire barrier constructed in accordance with Section 707. A fire barrier is not required to enclose an atrium space when one (1) of the following arrangements are met:

- A glass wall forming a smoke partition is provided and sprinklers are provided along both sides of the separation walls and doors. Sprinklers must be located between 4 and 12-inches away from the glass at

intervals along the glass not more than 6-feet. The sprinkler system must be designed to wet all surface of the glass upon activation. The glass wall must be installed in a gasketed frame in such a manner that the framing deflects without breaking the glass before the sprinkler operates. Where glass doors are provided, they must be self or automatic-closing.

- A glass block wall assembly complying with section 2110 having a ¾-hour rating is provided.
- A fire barrier is not required when the design is accounted for in the design of the smoke control system.

The atrium is not separated from the balance of the building with 1-hour construction. The geometry of the building is considered in the design of the smoke control system as discussed in the smoke control rational analysis attached as Appendix A of this document.

It should be noted that that the cafeteria and learning commons are located at the base of the atrium on Level 1 of the building. The current design for the spaces includes a permeable, mesh separation screen to be installed to separate the east and west sides of the atrium thus allowing school-related, and public events to occur simultaneously at the base of the atrium. Additionally, doors will be constructed in the north and south side corridors adjacent to the atrium to further separate the school and public event spaces. Each side (east and west) of the atrium will be provided with two (2) means of egress. As noted above, the mesh screen is permeable, thus will not impact the functionality of the smoke control system.

Atrium interior finishes must be class B or higher, with no reduction for sprinkler protection (Section 404.8).

It should be noted that unique egress requirements exist for atrium spaces in Section 404.9. Exit access travel distance through the atrium, not at the level of exit discharge, must not exceed 200-feet within the bounds of the atrium. Refer to the means of egress section of this report for further information.

STAGE DESIGN

The current Fuller School design includes a stage in the auditorium space on the First Floor. The requirements for stages are provided in MSBC Section 410. Section 410.3.1 requires stages to be constructed of materials as required for floors of the type of construction in which the stage is located. **As the building will be of Type IB Construction, the stage must be constructed of materials as required for floors.** In all types of construction, the finished floor must be constructed of wood or non-combustible materials. Openings through the stage floor must be equipped with tight-fitting, solid wood trap floors with approved safety locks.

Where the stage height is greater than 50-feet in height, all portions of the stage must be completely separated from the seating area by a proscenium wall with not less than a 2-hour fire-resistance rating extending continuously from the foundation to the roof (Section 410.3.4). Where a proscenium wall is required to have a fire-resistance rating, the stage openings must be provided with a fire curtain complying with NFPA 80, horizontal sliding doors complying with Section 716.5.2 having a fire protection rating of at least 1-hour, or an approved water curtain complying with section 903.3.1.1. **Based on the current set of drawings, the stage height is approximately 30-feet, thus a proscenium curtain is not required.**

Combustible scenery used in sets must meet the fire propagation performance criteria of Test Method 1 or 2, as appropriate of NFPA 701 in accordance with Section 806 of the International Fire Code.

It should be noted that the current stage design was measured to be approximately 1,560 square feet. Section 410.3.7 requires emergency ventilation for stages larger than 1000 square feet in floor area, or stages with a height greater than 50-feet. Ventilation must comply with Section 410.3.7.1 (roof vents) or 410.3.7.2 (Smoke control). **The stage will be provided with natural roof vents.**

Dressing and appurtenant rooms are required to be separated from the stage with rated construction in accordance with Section 410.5.1. Stages must be separated from dressing rooms, scene docks, workshops, storerooms and compartments appurtenant to the stage by fire barriers or horizontal assemblies. The fire-resistance rating must be 2-hour for stage heights greater than 50-feet, and not less than 1-hour for stage height of 50-feet or less. **As the stage is less than 50-feet in height, dressing rooms must be separated from the stage with 1-hour rated construction. Additionally, the AV rooms on the east and west sides of the stage will be provided with a 1-hour fire resistance rating.**

Stages must be provided with automatic sprinkler protection in accordance with Section 903.3.1.1. Sprinklers must be installed under the roof and gridiron and under all catwalks and galleries over the storage. Sprinklers must be installed in dressing rooms, performer lounges, and storerooms accessory to the stage (Section 410.7). Section 905.3.4 requires that stages greater than 1,000 square feet in area be provided with a Class III wet standpipe system with 1 ½-inch and 2 ½-inch hose connections on each side of the stage. **As the stage is greater than 1,000 square feet, it must be provided with a standpipe system as required by Section 905.3.4.**

It should also be noted that an accessible route must be provided to access the stage. **Refer to the accessibility section of this report for further clarification on the accessibility requirements associated with the auditorium space.**

MEANS OF EGRESS SYSTEM DESIGN

GENERAL REQUIREMENTS

Occupant Load

The occupant load for each space within the Building is determined using the occupant load factors listed in MSBC Table 1004.1.2, as shown in the table below.

OCCUPANT USE GROUP	OCCUPANT LOAD FACTOR PER PERSON
Classrooms	20 square feet (net) per person or actual occupant load
Lab Classrooms	50 square feet (net) per person
Unconcentrated Assembly Areas (Lounge, Collab, Cafeteria)	15 square feet (net) per person
Office/Business	100 square feet (gross) per person
Locker Rooms	50 square feet (gross) per person
Athletic Facility (Gymnasium)	50 square feet (gross) per person
Stage	15 square feet (net) per person)
Fixed Seating (Auditorium)	Actual Number of Seats
Circulation Space	100 square feet (gross) per person
Kitchen	200 square feet (gross) per person
Storage, Mechanical, Electrical	300 square feet (gross) per person
Bleacher Seating	18-inches per occupant

Refer to the 100% CD Life Safety Drawings prepared by Howe Engineers for the occupant load of each floor of the proposed building.

It should be noted that the design of the building entails classrooms with moveable partitions between individual rooms. As such, the calculated occupant load of individual classrooms does not represent the actual occupant load expected in each space. The life safety drawings depict an “actual” occupant load of 25-people per classroom, which includes students and staff members. **The approach of using a planned occupant load has been discussed and approved from the Authority Having Jurisdiction**. **The planned occupant load will be included on the certificate of occupancy for the building.**

Number of Exit Access Doorways

Section 1006.2.1.1 requires that three (3) or more exits be provided when a space has a calculated occupant load of 501 to 1,000 and four (4) exits are required when the occupant load is greater than 1,000 occupants. Section 1006.2.1 requires two exits for all areas exceeding the occupant load in table 1006.2.1. For an A-3/E occupancy, two exits are required if the occupant load exceeds 49 occupants or where the common path of travel exceeds 75 feet. In Group B occupancy areas, two exits are required if the occupant load exceeds 49 occupants or where the common path of travel exceeds 100 feet. Further, in Group S-1/S-2 occupancy areas, two exits are required if the occupant load exceeds 29 occupants or where the common path of travel exceeds 100 feet.

It should be noted that the first-floor occupant load exceeds 1,000, thus requiring four means of egress. The auditorium and gymnasium space are provided with their own dedicated egress doors leading directly to the exterior. The occupant load of the main school area is provided with four means of egress by means of doors to the exterior, and two (2) interior atrium stairways. The tech maker space, fab lab, art room, and media room on the first floor are all provided with a single 36-inch door that leads directly to the exterior of the building. Occupants in these rooms are expected to egress directly to the exterior of the building and do not need to enter the main building in order to egress. As such, the remainder of the first floor only requires three (3) means of egress, served by the two primary egress stairs, and the open stair within the atrium bounds.

It should be noted that the means of egress for unique spaces such as boiler rooms, furnace rooms, and refrigeration machinery rooms is governed by Section 1006.2.2. Boiler rooms, incinerator rooms, and furnace rooms require two (2) means of egress where the area of the space is over 500 square feet and any fuel-fired equipment exceeds 400,000 BTU input capacity (Section 1006.2.2.1). Where two means of egress are required, one (1) is permitted to be a fixed ladder or an alternating tread device. The exits must be remotely located at a distance equal to one-half the length of the maximum overall diagonal dimension of the room. Refrigeration machinery rooms larger than 1,000 square feet must have at least two (2) exits (Section 1006.2.2.2). All portions of the machinery rooms must be within 150-feet of an exit or exit access doorway. Doors must swing in the direction of egress travel regardless of the occupant load served.

The current egress strategy involves occupants on the first-floor egressing upwards one story to exit through the main entry doors on Floor 2. MSBC Section 1006.3 permits the path of egress travel to pass through one (1) adjacent story to reach an exit. Occupants from Floor 1 would only pass through one adjacent story to reach the main entrance to the building, thus the approach complies with Section 1006.3. It should also be noted that Section 404.9.3 permits the exit access travel distance to be through an atrium, provided that the total exit access travel distance through the actual atrium space is not greater than 200 feet. This section is complied with in the designed atrium.

Arrangement of Means of Egress (MSBC Section 1007.1.1)

Where two (2) exits, or exit access doors are required from a space, they must be placed not less than one-third the overall diagonal distance of the space, measured in a straight line between the exit doors or exit access doors.

Where there are three (3) or more exits, or exit access doors, at least two (2) of the exits or exit access doors are required to meet the remoteness as defined above. The additional exits shall be located as remotely as possible. **The current arrangement of means of egress meets these criteria. The primary egress stairs are on opposite sides of the building, satisfying the one-third remoteness criteria.**

It should be noted that the office suite on the south side of Level 2 requires two (2) means of egress based on the calculated occupant load of the space. The primary means of egress is by way of the door into the corridor on the north side of the space. The secondary means of egress is by way of a door on the south west side of the space which leads directly to an area of rescue assistance on the south side of the building. The exterior walkway is provided with sufficient width to accommodate two (2) wheelchairs side by side thus meets the requirements of 521 CMR. The egress approach for the office suite has been discussed and approved by the Authority Having Jurisdiction for the project.

Exit Capacities

The exits within the building will be designed using the exit capacity factors listed in MSBC Sections 1005.3.1 and 1005.3.2. The exit capacity for stairs is calculated at 0.2 inches per occupant, while all other means of egress are calculated at 0.15 inches per occupant as the building will be fully sprinklered and provided with emergency voice/communication capabilities (Section 1005.3). The minimum required clear width shall not be less than those outlined within other sections of this report, which have been excerpted in the table below for reference.

LOCATION	EXIT CAPACITY NON-SPRINKLERED	MINIMUM REQUIRED CLEAR WIDTH
Stairways	0.20 inches per person	44 inches (MSBC Section 1011.2)
Doors	0.15 inches per person	32 inches (MSBC Section 1010.1.1)

Refer to the 100% CD Life Safety Drawings prepared by Howe Engineers for the egress capacity and exiting strategy of each floor level. As seen in the life safety drawings, the means of egress capacity exceeds the occupant load on all floors.

Exit Access Travel Distance (MSBC Section 1017)

The Travel distance for each of the occupancies will be in accordance with the requirements contained in MSBC Section 1017.2 and Table 1017.2. Refer to the Table below:

OCCUPANCY	MAXIMUM ALLOWABLE TRAVEL DISTANCE (Sprinklered)
Group A, E, S-1	250 feet
Group B	300 feet
Group S-2	400 feet
Atrium	200 feet within atrium

Exit access travel distance must be measured from the most remote point within a story along the natural and unobstructed path of horizontal and vertical egress travel to the entrance of an *exit* (MSBC Section 1017.3). Where an exit access stairway or ramp is used as part of the means of egress system, the travel distance along the exit access stairway or ramp must be included in the exit access travel distance measurement (MSBC Section 1017.3.1). The measurement along exit access stairways and ramps must comply with the following:

- Stairways: measurements must be made on a plane parallel and tangent to the stair tread and nosings in the center of the stair and landings.
- Ramps: measurement along ramps must be made on the walking surface in the center of the ramp and landing.

Note that an "exit" is defined by MSBC Section 202 as that portion of a means of egress system between the exit access and the exit discharge or public way. Exit components include exterior exit doors at the level of exit discharge, *interior exit stairways* and *ramps*, *exit passageways*, *exterior exit stairways* and *ramps* and *horizontal exits*.

As addressed in the atrium design section of this report, the travel distance within the atrium is governed by Section 404.9. Where the path of egress travel is not on a level of exit discharge (i.e. Floor 3), the portion of the total permitted exit access travel distance that occurs within the atrium must not exceed 200-feet (Section 400.9.3).

Egress through Intervening Spaces (MSBC Section 1016.2)

Exit access from a room or space should not pass through an adjacent room or space, except where the room or area is accessory to the area being served. Exit access is not permitted to pass through kitchens, storerooms, restrooms, closets or other similar spaces. In addition, the exit access is not permitted to pass through rooms subject to locking.

Common Path of Travel Limits (MSBC Table 1006.2.1)

Maximum common path of egress travel distance is limited based on individual occupancies as outlined below.

- Business and Storage Occupancies 100 feet
- Assembly / Educational occupancies 75 feet

Common path of travel is less than 75-feet in the Fuller School and thus is compliant.

Dead End Corridor Limits (MSBC Section 1020.4)

Per MSBC Section 1020.4, where more than one exit or exit access doorway is required, the exit access must be arranged such that there is no dead ends more than:

- Assembly Occupancies 20 feet
- Business Occupancies 50 feet
- Storage Occupancies 50 feet
- Educational Occupancies 50 feet

Note that a dead-end corridor is not limited where the length is less than 2.5 times the minimum width of the dead end. **Dead ends in the building are compliant.**

Exit Access Corridors (MSBC Section 1020)

Corridors used for the exit access portion of the means of egress will be constructed in accordance with the MSBC Section 1020. The exit access corridors will provide sufficient clear width to accommodate the number of occupants exiting through the corridor, but will never be less than 44 inches unless serving an occupant load of less than 50 people, in which case they can be 36 inches.

Per MSBC Table 1020.1, as the building will be fully sprinklered, rated corridors are not required.

It should also be noted that corridors in Group E occupancies with greater than 100 occupants are required to be 72-inches in width (Section 1020.2).

Exit Stair Discharge

The MSBC requires 50-percent of the enclosed interior exit stairways discharge to the exterior of the building and through the atrium. The remainder of the enclosed interior exit stairways are permitted to discharge to interior lobbies and vestibules (MSBC Section 1028.1). **The primary egress stairs on the east and west sides of the building both discharge directly to the exterior on the first floor and thus are compliant.**

Doors (MSBC Section 1010)

Doors throughout the building must comply with MSBC Section 1010.1.

1. Dimensional Requirements (MSBC 1010.1.1)

Minimum clear width:	32 inches
Maximum size of a door leaf:	48 inches
Minimum Clear Height:	6 feet – 8 inches

2. Doors shall be side-hinged swinging in all spaces except within storage areas.
3. Doors serving a space with 50 people or more are required to swing in the direction of egress travel towards the exit.
4. While opening, doors are not permitted to project more than 50 percent of the required clear width in an exit stair or exit access stairway at any moment during the swing when opening. In addition, doors, when fully open, are not permitted to project more than 7 inches into the required exit clear width

Exit signage (MSBC Section 1013)

1. Exit signs must be provided in each room or space that requires more than one (1) exit or exit access.
2. Exit signs must be placed such that no point within an exit access corridor is more than 100 feet or the listed viewing distance of the sign, whichever is less, from the nearest visible sign.
3. Main exterior exit doors or gates which obviously and clearly are identifiable as exits are not required to be provided with an exit sign where approved by the building official.

4. Every exit sign and directional exit sign must have plainly legible letters not less than 6 inches high with the principal strokes of the letters not less than ¾ inch wide. The word “EXIT” must be in high contrast with the background and shall be clearly discernible when the exit sign illumination means is or is not energized. When an arrow is provided as part of the exit sign, the construction shall be such that the arrow direction cannot be readily changed.
5. Exit signs and exit directional signs can be externally or internally illuminated. The level of illumination at the sign’s surface must be no less than 5-foot candles.
6. Exit signs shall be illuminated at all times and connected to an emergency power source having a duration of not less than 90 minutes. Emergency power shall conform to the National Electrical Code (NFPA 70).
7. Exit signs must be provided within 18-inches of the floor in electric rooms if the electric room has over 1,200 amperes and is more than 6-feet wide. In addition, panic hardware should be provided from these spaces.
8. **The International Symbol of Accessibility must be included on exit signs at exits to grade.**
9. Directional signage indicating the location of other means of egress and in which are accessible means of egress must be provided at the following locations:
    a. At exits serving a required accessible space, but not providing an approved accessible means of egress.
    b. At Elevator Landings
    c. Within areas of refuge

Means of Egress Lighting (MSBC Section 1008)

The building will meet the following criteria as MSBC Section 1008 requires the following for means of egress lighting:

- The means of egress, including the exit discharge, must be illuminated at all times the building space served by the means of egress is occupied, <u>except aisle access ways in Group A occupancies.</u>
- The means of egress illumination level must not be less than 1 foot-candle (11 lux) at the walking surface.
- The power supply for means of egress illumination must normally be provided by the premises' electrical supply. In the event of power supply failure, an emergency electrical system shall automatically illuminate all of the following areas:
    - Aisles and unenclosed egress stairways in rooms and spaces that require two or more means of egress.
    - Corridors, exit enclosures and exit passageways in buildings required to have two or more exits.
    - Exterior egress components at other than their levels of exit discharge until exit discharge is accomplished for buildings required to have two or more exits.
        - All components to the access to public way must be illuminated
    - Interior exit discharge elements, as permitted in Section 1027.1 of the MSBC, in buildings required to have two or more exits.
    - Exterior landings as required by Section 1008.1.6 for exit discharge doorways in buildings required to have two or more exits.
- The emergency power system must provide power for a duration of not less than 90 minutes and must consist of storage batteries, unit equipment or an on-site generator. The installation of the emergency power system must be in accordance with Chapter 27 of the MSBC.
- Emergency lighting facilities must be arranged to provide initial illumination that is at least an average of 1 foot-candle (11 lux) and a minimum at any point of 0.1 foot-candle (1 lux) measured along the path of egress at floor level. Illumination levels are permitted to decline to 0.6 foot-candle (6 lux) average and a minimum at any point of 0.06 foot-candle (0.6 lux) at the end of the emergency lighting time duration. A maximum-to-minimum illumination uniformity ratio of 40 to 1 must not be exceeded.

FIRE PROTECTION SYSTEMS

SUMMARY OF FIRE PROTECTION FEATURES

The following Fire Protection and Life Safety Features are being provided in the building:

1. The building will be constructed of a Type IB fire resistive non-combustible construction.
2. The building will be fully sprinklered and provided with standpipes as outlined in this section.
3. A manual fire alarm system will be provided in the building and will meet current NFPA 72 spacing requirements
4. Emergency voice/alarm communication systems will be installed in accordance with Section 907.2.3
5. Emergency Power and Standby Power for all life safety systems
   a. At least one elevator will be available to operate on Standby power
   b. Egress Signage and Lighting will be provided with Emergency Power.
   c. The atrium smoke control system will be provided with Standby Power.
6. Portable fire extinguishers are being provided in supervised locations in accordance with NFPA 10.
7. The system will be zoned relative to an atrium zone and non-atrium zone.

AUTOMATIC SPRINKLER PROTECTION

The Fuller School will be provided with an automatic sprinkler system as required for Group E occupancies with fire areas larger than 12,000 square feet and as required by the M. G. L. 148 26 G. The atrium and stage are also required to be provided with sprinkler protection. The design densities of the sprinkler system will be determined by the engineer of record.

It should be noted that the auditorium on Level 1 of the building is currently designed with cloud ceilings below the roof of the space. The cloud ceilings are constructed of wood, thus the ceilings are combustible. The sprinkler approach for the cloud ceiling involves providing sprinklers above and below the clouds to ensure adequate performance of the sprinkler system with respect to the clouds and to the areas below the cloud ceilings. The design complies with the current MSBC and NFPA 13 and will be further discussed by Framingham Fire Department. As the cloud ceilings are provided with sprinkler protection above and below, they are permitted to be Class A, B, or C interior finish in accordance with MSBC Section 803.13.2 (below)

803.13.2 Set-out construction. Where walls and ceilings are required to be of fire-resistance-rated or noncombustible construction and walls are set out or ceilings are dropped distances greater than specified in Section 803.13.1, Class A finish materials, in accordance with Section 803.1.1 or 803.1.2, shall be used.

Exceptions:

1. Where *interior finish* materials are protected on both sides by an *automatic sprinkler system* in accordance with Section 903.3.1.1 or 903.3.1.2.
2. Where *interior finish* materials are attached to noncombustible backing or furring strips installed as specified in Section 803.13.1.1.

STANDPIPES

Standpipes are required throughout the building when the highest floor is greater than 30 feet above the lowest level of fire department access (MSBC Section 905). **Based on the building elevation drawings provided by JLA, the building height from the lowest level of fire department vehicle access to the highest occupiable floor is 28-feet. It should be confirmed by JLA that the lowest level of fire department access is the first floor and that the landscape around the building is not sloped to provide fire department access at a lower point. It should be noted that Class I standpipes are permitted in buildings provided with automatic sprinkler protection in lieu of a Class III standpipe.**

It should also be noted that the stage will require a Class III wet standpipe system with a 1 ½-inch hose connection installed in accordance with NFPA 13 or NFPA 14 on each side of the stage (Section 905.3.4). This requirement is applicable as the stage is greater than 1,000 square feet in area.

FIRE ALARM

Section 907.2.3 requires a manual fire alarm system for group E occupancies having an occupant load that exceeds 50. The manual fire alarm system must initiate emergency voice/alarm communication features in the building. Where smoke detectors or automatic sprinkler systems are installed, the systems must be connected to the building fire alarm system. **It should be noted that manual fire alarm boxed are not required in Group E occupancies where the building is fully sprinklered, the emergency voice/alarm communication system will activate upon sprinkler waterflow, and where manual activation is provided from normally occupied spaces.**

Manual Fire Alarm Pull Stations

Manual fire alarm devices will be located no more than five (5) feet from the entrance to each exit. Additional manual fire alarm boxes will be located so that travel distance to the nearest box is no more than 200 feet. A Manual pull station will also be provided in a constantly attended locations to provide the capability to manually activate the fire alarm system in an emergency situation.

SMOKE CONTROL

As indicated in the atrium design section of this report, the atrium will require a smoke control system designed in accordance with MSBC Section 909. The system may be designed as either a natural or mechanical ventilation system, and an engineering rational analysis should be provided to document the intended design of the system function. A smoke control panel must be provided in accordance with MSBC Section 909.16. As indicated throughout this report, the smoke control system must be provided with standby power.

Refer to Appendix A for the atrium Smoke Control Rational Analysis.

EMERGENCY POWER

The following systems shall be provided with emergency power:

1. Emergency lighting along the means of egress in the building and along the exit discharge at a minimum level of 1-foot candle. Emergency lighting shall be provided in those rooms when the area is occupied. Subject to the approval of the Authorities Having Jurisdiction.
    a. Complete Emergency Lighting shall be provided to the exit discharge of the building exits as determined by the Authorities Having Jurisdiction.
2. Fire Alarm System and <u>all</u> associated equipment including but not limited to the following:
    a. Fire alarm control panels (including all fire alarm control equipment throughout the facility).
    b. Fire alarm controls.
    c. Fire alarm power supply booster panels.
    d. Digital fire alarm communicators and interface equipment.
    e. Dedicated telephone line from the Fire Alarm Control Panel dialer.
    f. Manual pull stations
3. Exit and Directional Exit Signs.
4. Elevators (transferable)
5. Power Operated Locks (if provided)
    a. Manual override controls for any electric locking or hardware in the entire building.

It should be noted that the atrium smoke control system will be required to be provided with standby power.

ELEVATOR PROVISIONS

An elevator is proposed in the southwest portion of the building which will serve the first through the third floor and will provide roof access.

Phase I and Phase II recall equipment prescribed by the ASME 17.1 elevator code will be provided for the elevators. Accessible elevators shall be located with the required travel distance as per the Accessibility Standards.

Two-way communication devices must be provided at elevator lobby areas above grade (i.e. second and third floors).

It should be noted that the elevator machine room will require a fire-resistance rating matching the rating of the elevator shaft. This rating must be provided where openings are provided from the elevator machine room into the elevator shaft as the machine room directly abuts the elevator shaft. The elevator machine room is currently designed with openings into the elevator shaft, thus the machine room will be provided with a 2-hour rating to match the rating of the elevator shaft.

PORTABLE FIRE EXTINGUISHERS

The Massachusetts State Fire Code (MSFC) adopts and amends the 2015 edition of NFPA 1, which requires fire extinguishers in Groups A, B, and E occupancies. As such, fire extinguishers must be provided throughout all enclosed areas of the building. Portable fire extinguishers will be provided in locations where required by NFPA 10. Basic requirements are as follows.

In accordance with MSBC Section 906.1, extinguishers will be required in the following locations:

- Not more than 75 feet of travel distance to a fire extinguisher. Fire Extinguishers need not be located in each room if the travel distance can be achieved and the extinguisher has the correct hazard classification for each hazard within the 75-foot travel distance.
- Portable Class BC in elevator machine rooms and kitchens (kitchens may require class K depending on contents and use)
- Shall not exceed 40 lbs. capacity

Actual Mounting Locations (2013 Edition NFPA 10)

- Bottom of extinguisher at least 4" above the floor
- Top of extinguisher not more than 5 ft. above the floor
- 1-6.6 Fire extinguishers shall not be obstructed or obscured from view
- 1-6.5 Cabinets shall not be locked (However, if extinguishers are in locations subject to malicious use, the cabinets can be locked, but there must be a means to open them in an emergency. Example: breaking the glass)
- 1-6.3 Fire extinguishers shall be conspicuously located where they will be readily accessible and immediately available in the event of a fire. Preferably they shall be located along normal paths of travel, including exits from areas.
- 1-6.11 Operating instruction shall be located on the front of the extinguisher and be clearly visible (manufacturer requirement)
- 1-6.12 Fire extinguishers mounted in cabinets or wall recesses shall be placed so that the fire extinguisher operating instructions face outward.
- The location of such fire extinguishers shall be marked conspicuously (see 1-6.6)

FIRE DEPARTMENT ACCESS

Per 527 CMR Section 18.2.3.2, a fire department access road must be maintained / provided in a manner that allows for at least one (1) exterior door to be within 50 feet of the access road that can be opened from the outside. In addition:

- All points of the building must be within 150 feet of the fire department access road which is increased to 250 feet when the building is protected throughout by an automatic sprinkler system.
- The fire department access road must have an unobstructed width of not less than 20 feet, and an unobstructed vertical clearance of 13 feet 6 inches.
- A minimum 25-foot turning radius must be provided / maintained.
- The access road must be designed and maintained to support the imposed loads of fire department apparatus and must be provided with an all-weather driving surface.
- Turning radius must be approved by the AHJ, with a minimum turning radius of 25 feet.
- Where necessary, dead ends are permitted provided they do not exceed 150 feet in cumulative length.
- The access road plan must include an analysis and evaluation of fire apparatus maneuvers throughout the access roads created by sweep path analysis and turn simulation software.

EMERGENCY RESPONDER RADIO COVERAGE

Per the MSBC Section 916.1, all buildings must have approved radio coverage for emergency responders within the building based upon the existing coverage levels of the public safety communication systems of the jurisdiction at the exterior of the building. This section does not require improvement of the existing public safety communication systems. The emergency responder radio coverage must be in accordance with Section 510 of the International Fire Code.

The building is considered to have acceptable emergency responder radio coverage when signal strength measurements in 95 percent of all areas on each floor of the building have a minimum signal strength of -95 dBm must be receivable within the building and a minimum signal strength of -100 dBm must be received by the agency's radio system when transmitted from within the building. **A bi-directional antenna should be provided for the project. Further discussion with Framingham is required to determine the number of antennas needed for Fire, Police and EMS.**

ACCESSIBILITY

As a new construction building, the Fuller School will be designed to be fully accessible and comply with MAAB as well as the 2010 Americans with Disabilities Act.

GENERAL REQUIREMENTS

The Fuller School must be designed to meet MAAB as well as the 2010 Americans with Disabilities Act. Both ADAAG and MAAB require that all entrances are accessible, changing rooms and showers are accessible, and that all bathrooms be designed to be accessible. Finally, it should be noted that MAAB requires all exterior pathways to be fully accessible and that if parking is provided that a certain percentage be accessible.

The following accessible features should be provided in the building.

- All bathrooms and locker rooms should be accessible. Locker rooms should include the following features:
    - 36-inch wide accessible routes around all lockers. (including between benches and lockers)
    - 5% but not less than one accessible locker. 36″ wide space should be provided between benches and lockers
    - At least one accessible shower stall
    - Accessible toilet and plumbing fixtures
- The elevator will be fully accessible and meet gurney requirements
- All entrances must be accessible
- All exterior walkways must be accessible
- Classrooms must be accessible including all laboratory/ science classrooms. 5% but not less than one (1) of each type of equipment/ learning station should be accessible
- All exterior paths should be accessible

Public and Common Use Spaces

The public and common use spaces are those spaces inside or outside the buildings that are used by residents and/or visitors. This includes the parking and assembly spaces on the ground floor. These spaces must be accessible per the requirements of 521 CMR and the 2010 ADAAG. These spaces should be on an accessible route at least 36- inches wide which connects accessible parking, accessible entrances, and public and common use spaces. Wherever possible, the accessible route should be the shortest possible route (521 CMR 10.2). All doorways and openings located in common use and public use spaces and along accessible routes should comply with 521 CMR Sections 26.2 through 26.11 and ADAAG Section 404.

Accessible Means of Egress

All spaces or elements that are required to be accessible must be provided with at least one accessible means of egress. In spaces required to be provided with multiple means of egress, each space must be served by at least two accessible means of egress. Exit access stairways are permitted to be considered part of the accessible means of egress when they are provided with a clear width of at least 48 inches between the handrails and two-way communication is provided at the elevator landings in accordance with 780 CMR Section 1009.3. The building is fully sprinklered and areas of refuge are not required to be provided at the exit access stairways. Two-way communication is required to be provided at the elevator landings, so that the exit access stairways in the school can be considered as part of the accessible means of egress.

Parking

Parking will be provided in accordance with the following MAAB table based on the number of spaces provided for the residential occupants and the potential assembly occupants. **One in eight accessible spaces, but not less than one, must be van accessible.**

23.2.1	Total Parking in Lot	Required Minimum Number of Accessible Spaces
	15-25	1
	26-50	2
	51-75	3
	76- 100	4
	101-150	5
	151-200	6
	201-300	7
	301-400	8
	401-500	9
	501-1,000	2% of total
	1,001 and over	20 plus 1 for each 100 over 1000

Accessible Seating Requirements

In places of assembly with fixed seating, the minimum number of accessible spaces provided must be in accordance with the table below:

Total Seating	Wheelchair Spaces
4 to 25	1
26 to 50	2
51 to 300	4
301 to 500	6
over 500	6, one additional space for each total seating capacity increase of 100.

When more than 150 seats are provided, the wheelchair seating locations must be provided in more than one (1) location and must be dispersed through the seating area. Accessible seating must be integral with the rest of the seating (i.e. shoulder to shoulder). Bleachers should be ordered with cutouts where accessible seating will be provided.

It should also be noted that ADAAG requirements will be applicable to the project. ADAAG Table 221.2.1.1 also requires six (6) wheelchair spaces to be provided in the auditorium as the space will have 412 fixed seats.

In addition to wheelchair seating locations, 1% of all fixed seats must be a companion seat consisting of an aisle seat with no armrests on the aisle side (or with removable or folding armrests on the aisle side).

Accessible seating positions are permitted to be clustered for bleachers, balconies and other areas having sight lights with a slope greater than 5%. Equivalent accessible viewing positions may be located on levels having accessible egress.

Ticket box offices and concession stands must be located on an accessible route, and a portion of the counter must be a maximum of 36 inches high for a length of at least 36 inches. A counter or auxiliary counter can be used to achieve this requirement.

It should be noted that accessible seating must be provided in both the auditorium and the gym, which is provided with telescoping bleacher seating. The auditorium is provided with 412 fixed seats, thus must be provided with six (6) wheelchair seats (with a companion seat directly adjacent to the wheelchair space). The gymnasium must be provided with cutout sections in the telescoping seating to accommodate wheelchair spaces.

Additionally, within the auditorium spaces, assistive listening devices must be provided. Assembly areas that accommodate at least 50 persons or with an audio-amplification systems must be provided with permanently installed assistive listening systems (521 CMR 14.5.1). If the assistive listening system serves individual fixed seats, such seats must be located within a 50-foot viewing distance of, and including the stage, and must have a complete view of the stage (521 CMR 14.5.3). Signage must be provided to notify patrons of the availability of a listening system and must comply with the signage provisions of 521 CMR 41.00.

An accessible route must be provided to the performance area within the auditorium.

Where classrooms are provided with fixed seating, at least 5% but not less than one will be provided with an accessible route, accessible clear floor space, knee clearance, and table heights.

PLUMBING FIXTURES

The Massachusetts Plumbing Code requires specific plumbing fixtures for various spaces in the building. The number of plumbing fixtures shall be determined based on the following factors, as excerpted from the Massachusetts State Plumbing Code, Section 10.10 Table 1.

The following table outlines the plumbing fixture requirements for new construction. The factors that dictate the fixture counts for the building depend on the intended and future function of the Fuller School. It should be noted that separate toilet facilities are required for staff and students.

Occupancy	Water closets			Lavatories		Drinking Fountains	Other Fixtures
	Male	Female	Urinals	Male	Female		
Education (Secondary)	1 per 90	1 per 30	1 per 90	1 per 90	1 per 90	1 per 75	1 service sink per floor
Education (Staff)	1 per 25	1 per 20	33% substitution	1 per 40	1 per 40	-	1 service sink per floor
Auditorium	1 per 600 seats	1 per 200 seats	1 per 200 seats	-	-	-	-

The following tables outline the required plumbing fixtures for the Fuller School based on the use of a programmatic occupant load. A program occupant load captures the intended use of spaces, as opposed to the calculated occupant load which tends to be more conservative in nature. **The use of a program occupant load requires approval from the plumbing official**.

Gender neutral toilets have been discussed for the building. The following provisions are applicable for the installation of gender-neutral toilets in the Fuller School:

1. Gender neutral facilities are permitted for employees
2. Gender neutral toilets can only be counted one time towards plumbing fixture counts. Thus, they may be counted as either Male or Female.
3. When two (2) or more toilet facilities are required, Gender Neutral Toilets may replace these fixtures but only in pairs (E.g. one replaces a Male and the other replace a female fixture).
4. Once the minimum number of fixtures is provided Gender Neutral Toilets can be singularly provided.

It should also be noted that 248 CMR Section 10.10(18)(h).6 requires all secondary schools that conduct physical activities on the school premises to be provided with separate men's and women's shower facilities to accommodate students. Based on preliminary discussion with the plumbing official, showers will be required at Framingham Fuller School. Showers should be provided for the largest population expected to use them at a given time (e.g. physical education class, or after school sporting event).

Fuller Plumbing Fixtures Calculation

630 Students 120 Staff

Educational Use - Use Group E (elementary)

Required Fixtures per Code						Toilet Female Required		Toilet Male Required		Urinals Male Required		Lavatories each sex Required			Drinking Fountain Required
Students						1 per 30		1 per 90		1 per 90		1 per 90			1 per 75
Staff						1 per 20		1 per 25		33%		1 per 40			-

	Occupants			Unisex Toilet		Toilet - Female		Toilet - Male		Urinals		Lavatories			Drinking Fountain					
Floor Level	Total	Male	Female	Required	Provided	Required	Provided	Required	Provided	Required	Provided	Each sex Required	Female Provided	Male Provided	Required	Provided	Classrm Sinks	Showers	Mop Sinks	Notes
					See Below															
Floor 1 Students	210	105	105	0	1	4	12	2	5	2	7	2	11	11	3	3				
Floor 1 Staff	40	20	20	0	13	1	-	1	-	1		1	1	1	-	-			3	
Floor 2 Students	210	105	105	0	1	4	8	2	2	2	6	2	8	8	3	3				
Floor 2 Staff	50	25	25	0	3	2	-	1	-	1		1	1	1	-	-			2	
Floor 3 Students	210	105	105	0	1	4	8	2	2	2	6	2	8	8	3	3				
Floor 3 Staff	30	15	15	0	2	1	-	1	-	1		1	1	1	-	-			2	
	750	375	375	0	21	16	28	9	9	9	19	9	30	30	9	9	0	0	7	

Unisex Toilets provided:

Students 3 SPED
1 at Lockers

Staff 1 Central Office
1 Medical Suite
1 Kitchen
6 General

Total Toilet Fixtures Required 34
Total Toilet Fixtures Provided 77

Community Service Areas - Use Group E - Non-Simultaneous Use

420 Auditorium, 600 Gym

Required Fixtures per Code	Toilet Female Required		Toilet Male Required		Urinals Male Required	
	1 per 200		1 per 600		1 per 200	

Assembly Use

Floor Level	Occupants Total	Occupants Male	Occupants Female			Toilet Female Required	Toilet Female Provided	Toilet Male Required	Toilet Male Provided	Urinals Male Required	Urinals Male Provided	Notes
Floor 1	1,020	510	510			3	7	1	2	3	5	Plus 2 Unisex
						3	7	1	2	3	5	

Total Toilet Fixtures Required 7
Total Toilet Fixtures Provided 14 17 With Unisex

CONCLUSION

The building is to be constructed in accordance with the requirements of the applicable Codes. During this process, the building will be designed to provide levels of safety at least equivalent to the provisions contained in the applicable codes. To achieve these levels of safety, the following primary features are provided:

1. The Building will be of Type IB fire resistive non-combustible construction and will comply with the separated mixed-use provisions of the MSBC.
2. The building will be fully sprinklered and provided with standpipes as outlined herein.
3. The means of egress system will be provided as outlined in this report and will meet the requirements of MSBC.
    a. Classrooms are proposed to use the actual number of students/ staff as opposed to the calculated occupant load.
    b. Open stairs will be used as part of the exit access as permitted by Chapter 10 of the MSBC.
4. The building will be provided with a manual fire alarm system and emergency voice/alarm communication abilities.
5. The atrium will be provided with a smoke control system that maintains tenability 6-feet above the highest walking surface. The smoke control system will be provided with standby power.
6. The building will be designed to be fully accessible in accordance with MAAB and ADAAG.
7. Plumbing fixtures will be provided in accordance with the provisions in the tables detailed above.

Prepared by,

Howe Engineers, Inc.

Jeremy A. Mason

Jeremy A. Mason, P.E.(MA)
Associate Principal

APPENDIX A: SMOKE CONTROL BASIS OF DESIGN

SMOKE CONTROL RATIONAL ANALYSIS

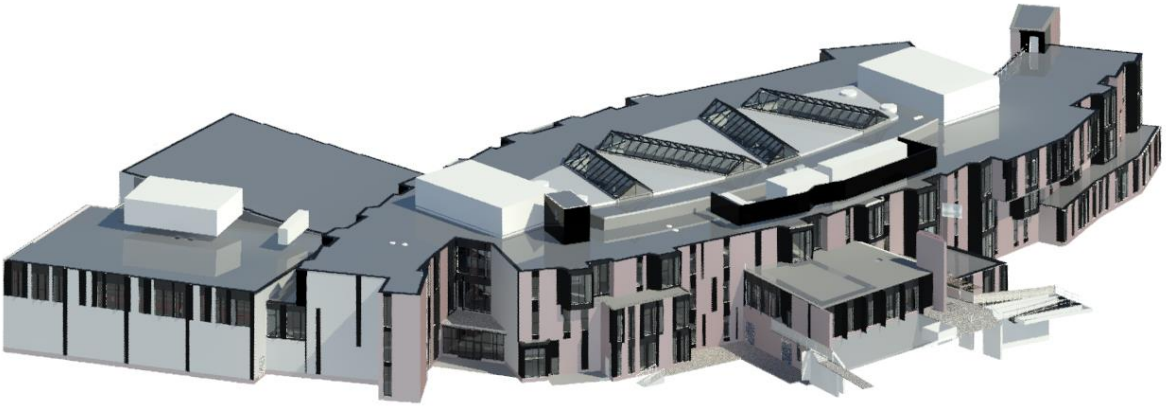

FRAMINGHAM FULLER MIDDLE SCHOOL

FRAMINGHAM, MA

Prepared for:

Jonathan Levi Architects
266 Beacon Street
Boston, MA 02116

Prepared by:

101 Longwater Circle, Suite 203
Norwell, MA 02061
Phone: 781.878.3500
Fax: 781.878.3551

SUBMITTED: OCTOBER 15, 2019

Smoke Control System Design

Table of Contents

PURPOSE 5
APPLICABLE CODES AND STANDARDS 5
PROJECT DESCRIPTION 6
DESIGN OBJECTIVE 6
METHODOLOGY 6
CFD MODELING 7
DESIGN ASSUMPTIONS 7
SMOKE CONTROL CONFIGURATION 8
EXHAUST CONFIGURATION 8
MAKEUP AIR CONFIGURATION 10
DESIGN FIRE 13
Design Fire Selection and Details 14
Location Analysis 14
Scenario 1 – Axisymmetric Design Fire Selection 16
Scenario 2 – Balcony-Spill (Beneath Floor 3 Walking Surface) Design Fire Selection 17
Scenario 3 – Balcony-Spill (Beneath Floor 3 Walking Surface) Design Fire Selection 19
Scenario 4 – Balcony-Spill (Beneath Floor 2 Walking Surface) Design Fire Selection 21
TENABILITY CRITERIA & THRESHOLDS 23
SMOKE TOXICITY 23
HEAT EXPOSURE 25
VISIBILITY 25
CFD MODELING ANALYSIS 27
GENERAL CFD MODELING PARAMETERS ASSUMPTIONS 27
FDS MESH RESOLUTION 27
CFD RESULTS 28
Scenario 1 – 3,500 kW Axisymmetric Fire Results 31
SCENARIO 1 SMOKE TOXICITY RESULTS 31
SCENARIO 1 HEAT EXPOSURE RESULTS 34
SCENARIO 1 VISIBILITY RESULTS 36
Scenario 2 – 2,750 kW Balcony-Spill (Beneath Level 3 Walking Surface) Fire Results 38
SCENARIO 2 SMOKE TOXICITY RESULTS 38
SCENARIO 2 HEAT EXPOSURE RESULTS 41
SCENARIO 2 VISIBILITY RESULTS 43
Scenario 3 – 2,100 kW Balcony-Spill (Beneath Level 3 Walking Surface) Fire Results 45
SCENARIO 3 SMOKE TOXICITY RESULTS 45
SCENARIO 3 HEAT EXPOSURE RESULTS 48
SCENARIO 3 VISIBILITY RESULTS 50
Scenario 4 – 1,100 kW Balcony-Spill (Beneath Level 2 Walking Surface) Fire Results 52
SCENARIO 4 SMOKE TOXICITY RESULTS 52
SCENARIO 4 HEAT EXPOSURE RESULTS 55
SCENARIO 4 VISIBILITY RESULTS 57
Summary of Results 59
ADDITIONAL INTERNATIONAL BUILDING CODE SECTION 909 RATIONALE 60
HVAC Systems 60
Separation Distance 60
Stack Effect 60
Buoyancy 61
Stratification Analysis 61
Climate 61
Smoke Control Equipment Temperature 61

EQUIPMENT AND CONTROLS 62
SECONDARY POWER 62
EQUIPMENT 62
FIREFIGHTER'S SMOKE CONTROL PANEL 64
SEQUENCE OF OPERATION 65
SPECIAL INSPECTION AND TEST REQUIREMENTS 66
OVERVIEW 67
COMPONENT AND ACCEPTANCE TESTING CONDITIONS 68
PASS CRITERIA 68
FAILURE CRITERIA 69
PERIODIC TESTING REQUIREMENTS 69
CONCLUSION 70
APPENDIX A – HEAT RELEASE RATES 71
Example: Two-Panel Workstation Fire 72
PUBLISHED HEAT RELEASE RATES (UNITED STATES RESEARCH) 75
APPENDIX B – ATRIUM ZONE BOUNDARY 77
APPENDIX C – TIMED EGRESS ANALYSIS 79
DETECTION TIME PHASE 79
PRE-MOVEMENT TIME PHASE 80
MOVEMENT TIME PHASE ANALYSIS 81
Timed Egress Calculations 81
Moderate Movement Conditions 81
Flow Time 81
Travel Time 83
CONCLUSIONS 84

List of Figures

Figure 1: Smoke Exhaust Configuration (RCP Floor 3) 8
Figure 2: Smoke Exhaust Configuration (RCP Floor 2) 9
Figure 3: Makeup Air Configuration – Floor 1 (Plan View) 11
Figure 4: Makeup Air Configuration – Floor 2 (Plan View) 12
Figure 5: Makeup Air Configuration – Floor 3 (Plan View) 13
Figure 6: Floor 1 Fire Locations 15
Figure 7: Kiosk Heat Release Rates with Variations 16
Figure 8: Diagram of Alpert's Equations Variables 17
Figure 9: Scenario 2 Sprinkler Activation Calculation 18
Figure 10: Diagram of Alpert's Equations Variables 19
Figure 11: Scenario 3 Sprinkler Activation Calculation 20
Figure 12: Diagram of Alpert's Equations Variables 21
Figure 13: Scenario 4 Sprinkler Activation Calculation 22
Figure 14: SFPE Handbook, 5th Edition, Figure 63.14 24
Figure 15: SFPE Handbook, 5th Edition, Figure 63.28 25
Figure 16: Predicted Makeup Air Velocity – Floor 1 (Plan View) 30
Figure 17: Scenario 1 – Section View through Fire of CO Concentration 32
Figure 18: Scenario 1 – CO concentration 6 ft. above Floor 3 Walking Surface 33
Figure 19: Scenario 1 – Section View through Fire of Temperature 34
Figure 20: Scenario 1 – Temperature 6 ft. above Floor 3 Walking Surface 35
Figure 21: Scenario 1 – Section View through Fire of Visibility 36
Figure 22: Scenario 1 – Visibility 6 ft. above Floor 3 Walking Surface 37
Figure 23: Scenario 2 – Section View through Fire of CO Concentration 39
Figure 24: Scenario 2 – CO concentration 6 ft. above Floor 3 Walking Surface 40
Figure 25: Scenario 2 – Section View through Fire of Temperature 41
Figure 26: Scenario 2 – Temperature 6 ft. above Floor 3 Walking Surface 42
Figure 27: Scenario 2 – Section View through Fire of Visibility 43
Figure 28: Scenario 2 – Visibility 6 ft. above Floor 3 Walking Surface 44
Figure 29: Scenario 3 – Section View through Fire of CO Concentration 46
Figure 30: Scenario 3 – CO concentration 6 ft. above Floor 2 Walking Surface 47
Figure 31: Scenario 3 – Section View through Fire of Temperature 48
Figure 32: Scenario 3 – Temperature 6 ft. above Floor 2 Walking Surface 49
Figure 33: Scenario 3 – Section View through Fire of Visibility 50
Figure 34: Scenario 3 – Visibility 6 ft. above Floor 2 Walking Surface 51
Figure 35: Scenario 4 – Section View through Fire of CO Concentration 53
Figure 36: Scenario 4 – CO concentration 6 ft. above Floor 3 Walking Surface 54
Figure 37: Scenario 4 – Section View through Fire of Temperature 55
Figure 38: Scenario 4 – Temperature 6 ft. above Floor 3 Walking Surface 56
Figure 39: Scenario 4 – Section View through Fire of Visibility 57
Figure 40: Scenario 4 – Visibility 6 ft. above Floor 3 Walking Surface 58
Figure 41: Scenario 3 – Section View through Fire of Temperature 61
Figure 42: Kiosk Heat Release Rates with Variations 71
Figure 43: Heat Release Rate vs. Time (Individual Two-Panel Workstation Fire) 72
Figure 44: Two Panel Workstation fire at time 0:00 and 2:00 minutes 72
Figure 45: Two Panel Workstation fire at time 4:00 and 6:00 minutes 73
Figure 46: Two Panel Workstation fire at time 8:00 and 10:00 minutes 73
Figure 47: Two Panel Workstation fire at time 20:00 and 30:00 minutes 73
Figure 48: Two Panel Workstation fire at time 42:00 minutes 74
Figure 49: Floor 1 – Atrium Boundary Zone 77
Figure 50: Floor 2 – Atrium Boundary Zone 78
Figure 51: Floor 3 – Atrium Boundary Zone 78
Figure 52: Egress Time Model 79

PURPOSE

This report presents the design concept for the smoke control system provided within the Framingham Fuller Middle School in Framingham, Massachusetts, which will include a three (3) story atrium that connects the First Floor through Third Floor. The basis of this analysis represents the requirements of the Massachusetts State Building Code (MSBC), which is based on the International Building Code (IBC). The proposed smoke control system design will utilize the large smoke-filling reservoir (i.e., passive system) along with mechanical exhaust systems to maintain tenability 6 feet above the highest means of egress walking surface open to the atrium. The proposed design will be evaluated using a Computational Fluid Dynamics (CFD) model, known as Fire Dynamic Simulator (FDS), to demonstrate the design concepts of the smoke control system are compliant with the applicable codes.

APPLICABLE CODES AND STANDARDS

The following codes and standards are currently applicable to this project:

- 780 CMR Massachusetts State Building Code (MSBC), 9th Edition
    - 2015 International Building Code (IBC), with state amendments
    - 2015 International Mechanical Code (IMC), with state amendments
- Massachusetts Fire Prevention Code
    - 2015 Edition of NFPA 1, *The Fire Code*, with state amendments

Reference Standards from the Massachusetts State Building Code:

- 2015 Edition of NFPA 92, *Standard for Smoke Control Systems*
- 2009 Edition of NFPA 92B, *Standard for Smoke Management Systems in Malls, Atria and Large Spaces*

PROJECT DESCRIPTION

The Design Team is proposing a design for a new middle school located in Framingham, MA. The proposed building will be a newly constructed, three (3) story building with a footprint area of approximately 64,780 square feet. The building contains primarily Group E Educational spaces for middle school students (6th to 8th grade), with accessory office and lounge spaces. There is a gymnasium and auditorium on the north side of the building that will be considered Group A-3 assembly spaces as public events will likely be held in these spaces. Floors 1 and 2 serve as the primary circulation levels and provides the exits and entrances to the building. The floor levels of the project are described as follows:

Floor Level	Description
Floor 1	Classrooms, Lab Spaces, Gymnasium, Auditorium, Lounges, Offices, Storage, MEP
Floor 2	Classrooms, Lounges, Offices, Storage, MEP
Floor 3	Classrooms, Lounges, Offices, Storage, MEP

DESIGN OBJECTIVE

The design objective of this analysis, is to demonstrate compliance with the intent of the Building Code utilizing the natural smoke filling space and mechanical smoke control system to maintain tenable conditions along the means of egress during a fire event for a minimum of 1.5 times the required safe egress time, or 20 minutes, whichever is greater (MSBC Section 909.4.6). A tenable environment must be maintained at least 6 feet above any walking surface that forms a portion of the required means of egress system when traveling through the atrium spaces that are not intimate with fire ignition (MSBC Section 909.8.1).

METHODOLOGY

In order to demonstrate code compliance, the smoke control system must be evaluated using an engineering analysis that addresses characteristics of fuel load, separation requirements, heat release rates, and sprinkler effectiveness (MSBC Sections 909.4 and 909.8). In addition to these elements, this smoke control design will also utilize additional requirements as laid out by NFPA 92 Standard for Smoke Control Systems, and ASHRAE “Design of Smoke Management Systems” where not specifically addressed by the Building Code.

The ASHRAE “Design of Smoke Management Systems” manual and most recognized Building Codes indicate that effective smoke control design recommends multiple design approaches for large volume spaces when designing an effective system. These primary design approaches are:

1. Utilizing the large-volume space as a smoke reservoir and modeling smoke layer descent to determine if occupants are able to egress the space before they are exposed to smoke.
2. Removing the smoke in the large-volume space using a mechanical exhaust system sufficient to maintain the smoke layer interface at a predefined height for an indefinite period of time.
3. Removing smoke from the large-volume space, using a mechanical exhaust capacity that slows the rate of smoke layer descent for a period that allows occupants to safely egress the space.
4. Providing natural venting sufficient to maintain the smoke layer interface at a predefined height for an indefinite period of time.

5. Providing natural venting sufficient to slow the rate of smoke layer descent for a period that allows occupants to safely egress the space.

To provide a comprehensive and conservative design basis, the smoke control system will utilize the inherent large-volume space (Item 1 above) of the atrium skylight to provide a smoke reservoir which will aid the mechanical smoke control system (Item 2/3 above) to maintain tenability for a minimum of 1.5 times the calculated required safe egress time, or 20 minutes after detection, whichever is greater (MSBC Section 909.4.6).

NFPA 92, Section 5.1 provides a number of methods to justify the smoke control design approach chosen above, including basic algebraic calculations, compartment fire models, scale modeling, and zone models. NFPA 92 recommends computational fluid dynamics (CFD) modeling when evaluating complicated building geometries such as overhangs, pitched ceiling structures, and mesh ceiling structures causing smoke to spill to adjacent occupiable spaces.

CFD Modeling

A Computational Fluid Dynamics (CFD) model is used to evaluate the design fire scenarios within the Atrium Zone of the Framingham Fuller Middle School. CFD computer modeling is an advanced modeling method that is capable of predicting realistic heat and fluid flow through a space. The model consists of dividing a volume into a large number of small cubes (usually thousands or millions) and solving the fundamental conservation equations to calculate the movement of heat and mass across each cube as a function of time. The fundamental conservation equations include mass, energy, and momentum.

For the purposes of this analysis, a CFD modeling program called Fire Dynamics Simulator (FDS), Version 6.6.0, developed by the National Institute of Standards and Technology (NIST), will be used. This model has been developed for use in low speed transport of heat and combustion products from fire, as well as radiative and convective heat transfer between gas and solid surfaces. Further, the model has been verified for this type of application as indicated in the references provided in NFPA 92 Section A5.1.3. This model is available online at www.fire.nist.gov.

Design Assumptions

For the purpose of this analysis, it is not practical to evaluate all conditions for every possible fire scenario. Therefore, several assumptions had to be made to complete this analysis for a realistic worst-case scenario. These assumptions include design fire location, size and configuration, selection of tenability criteria (products of combustion) to evaluate, and tenability thresholds (or failure points). This section of the report is intended to address each of the assumptions in detail.

When sprinklers are provided in the location where the design fire is located, NFPA 92, Section A5.2.1 indicates that the heat release rate and growth of the fire is likely to be decreased or maintained at the value that the fire has reached when sprinklers activate. When applicable, fire sizes will be determined by the sprinkler effectiveness in accordance with MSBC Section 909.9.4.

In accordance with the requirements of the MSBC and NFPA 92, this analysis only contemplates one fire at one location within the building at a time for the design of the smoke control system. Multiple simultaneous fires at multiple locations are not contemplated, nor required to be contemplated by the adopted codes and standards.

SMOKE CONTROL CONFIGURATION

The building's smoke control system will utilize the exhaust method in accordance with MSBC Section 909.8. The system is comprised of mechanical exhaust fans for exhausting, and automatic-opening doors and louvers for supplying makeup air to maintain a tenable environment six (6) feet above all walking surfaces within the Atrium Zone.

EXHAUST CONFIGURATION

The proposed smoke control scheme provides a total of 240,000 cubic feet per minute (CFM) of mechanical exhaust. This is achieved via the exhaust points located at the ceiling of the atrium above the Third-Floor walking surface and located at the ceiling above the Second-Floor walking surface. Refer to Figure 1 and Figure 2 for a diagram of the exhaust configuration.

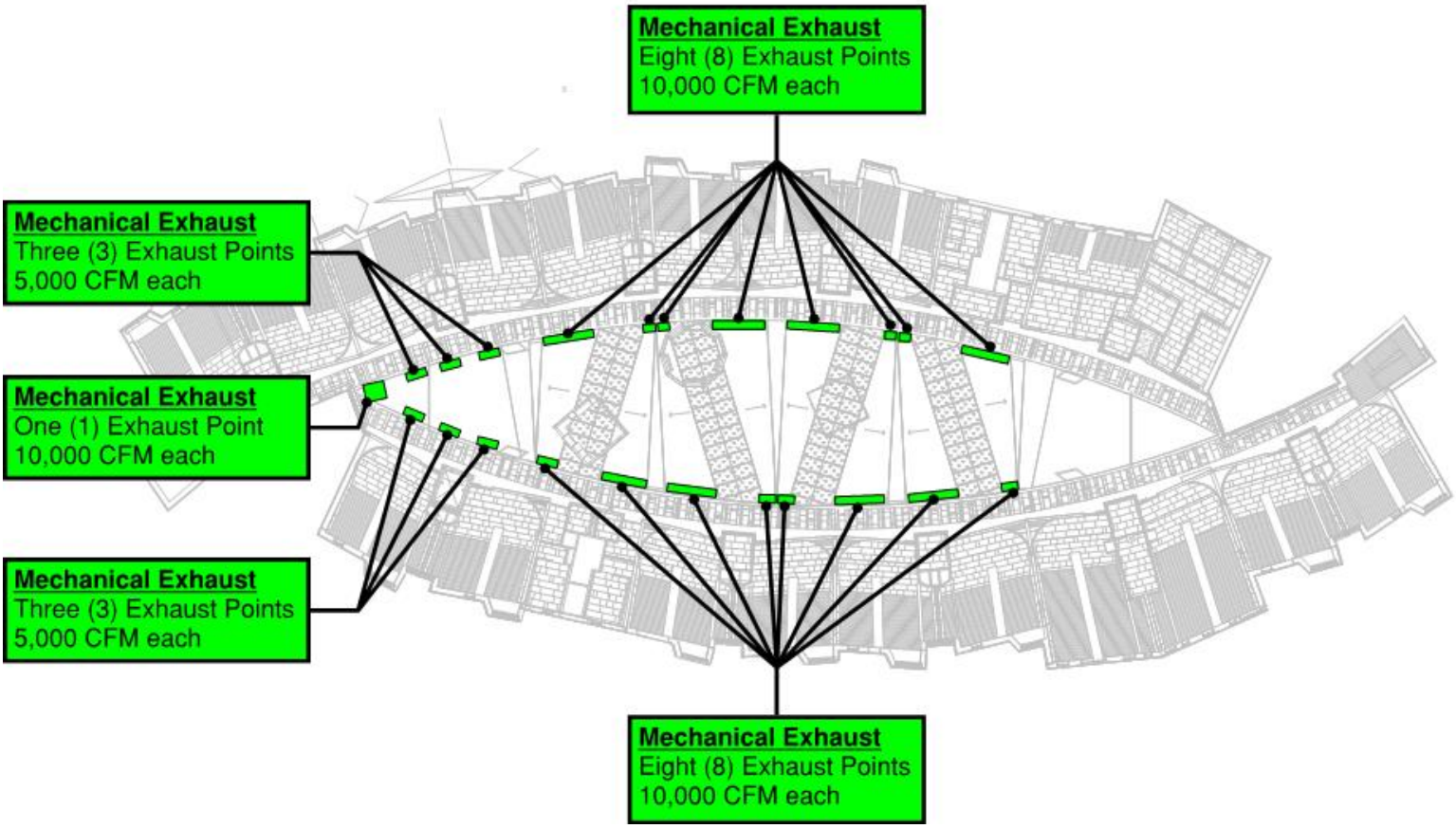

Figure 1: Smoke Exhaust Configuration (RCP Floor 3)

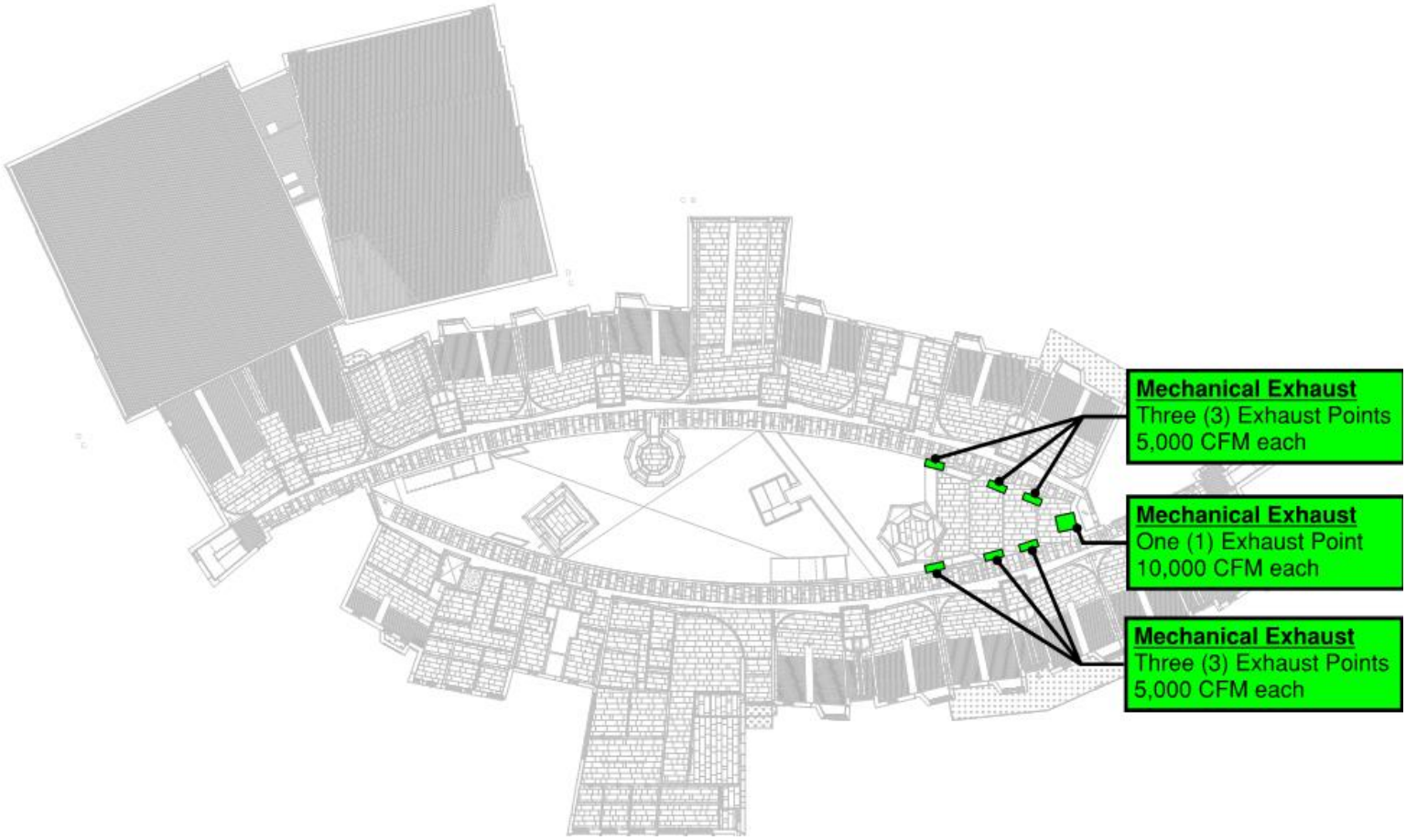

Figure 2: Smoke Exhaust Configuration (RCP Floor 2)

MAKEUP AIR CONFIGURATION

To assist in creating an established two-zone smoke layer environment within the atrium, makeup air must be introduced into the fire compartment at low enough velocity so that the plume filling and entrainment is not significantly increased as a result of turbulent flows. NFPA 92 limits air velocities to 200 feet per minute; however, higher velocities may be considered acceptable where supported by an engineering analysis, such as this Rational Analysis that utilizes CFD modeling (NFPA 92 Section 4.4.4.1.4).

Makeup air for the atrium smoke control system is provided via a combination of automatic doors and louvers (refer to Figure 3 through Figure 5), and summarized below. Selected doors/louvers are to be provided with UL 864 (UUKL) *Listed* power-operator motor controls that will activate upon alarm signal from appropriately zoned sprinkler waterflow switches, manual controls and via smoke detection that is located within the Atrium Zone. Refer to the Equipment and Controls section of this report for additional information.

- **Floor 1 (refer to Figure 3):**
  - Automatic Openings
    - Two (2) louvers providing a minimum of 63 ft^2 of free area each
- **Floor 2 (refer to Figure 4):**
  - Automatic Doors / Openings
    - Three (3) exterior single-leaf doors and three (3) interior single-leaf doors providing a minimum of 66 ft^2 of free area
    - Two (2) louvers providing a minimum of 63 ft^2 of free area each
- **Floor 3 (refer to Figure 5):**
  - Automatic Openings
    - Two (2) louvers providing a minimum of 63 ft^2 of free area each

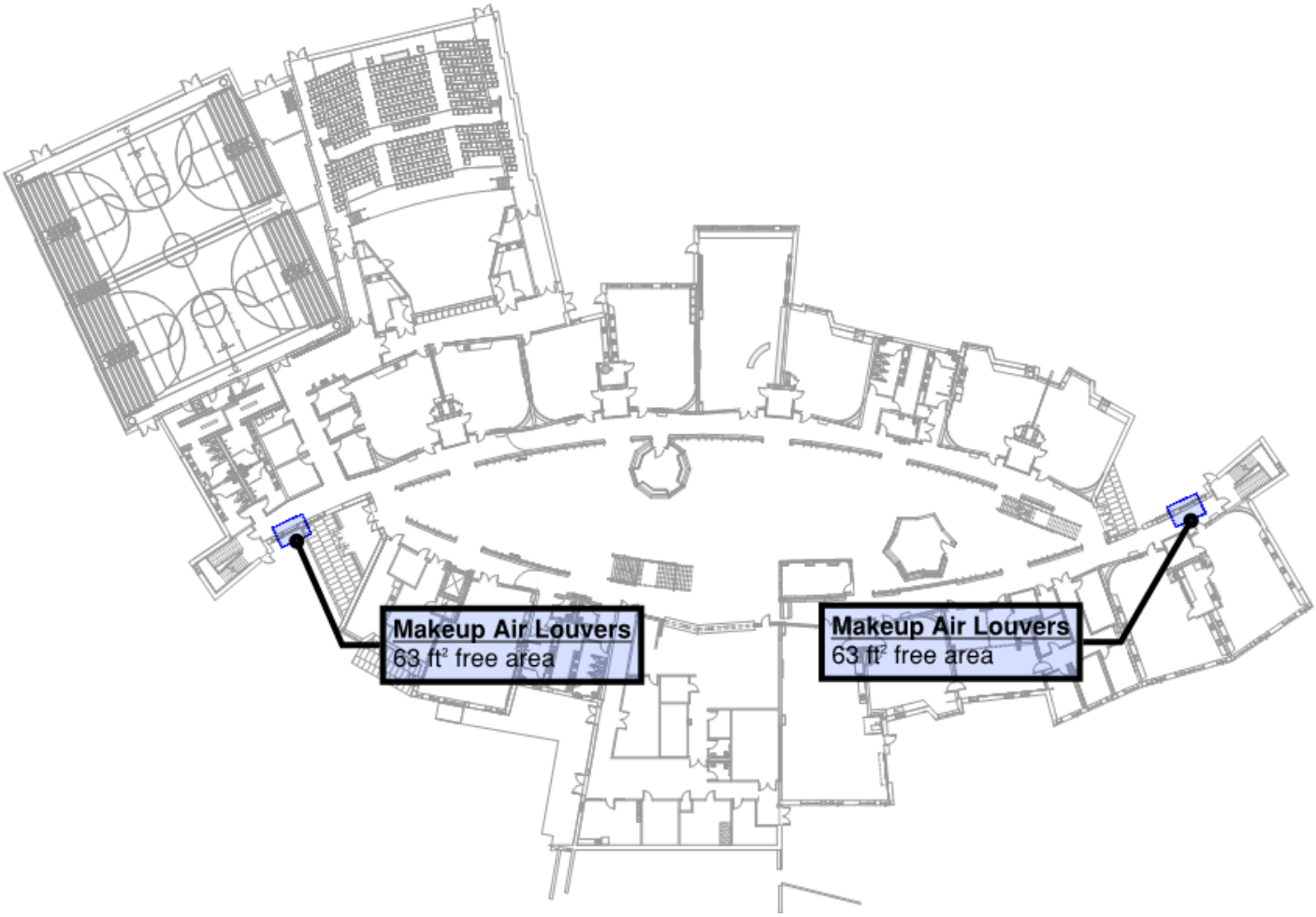

Figure 3: Makeup Air Configuration – Floor 1 (Plan View)

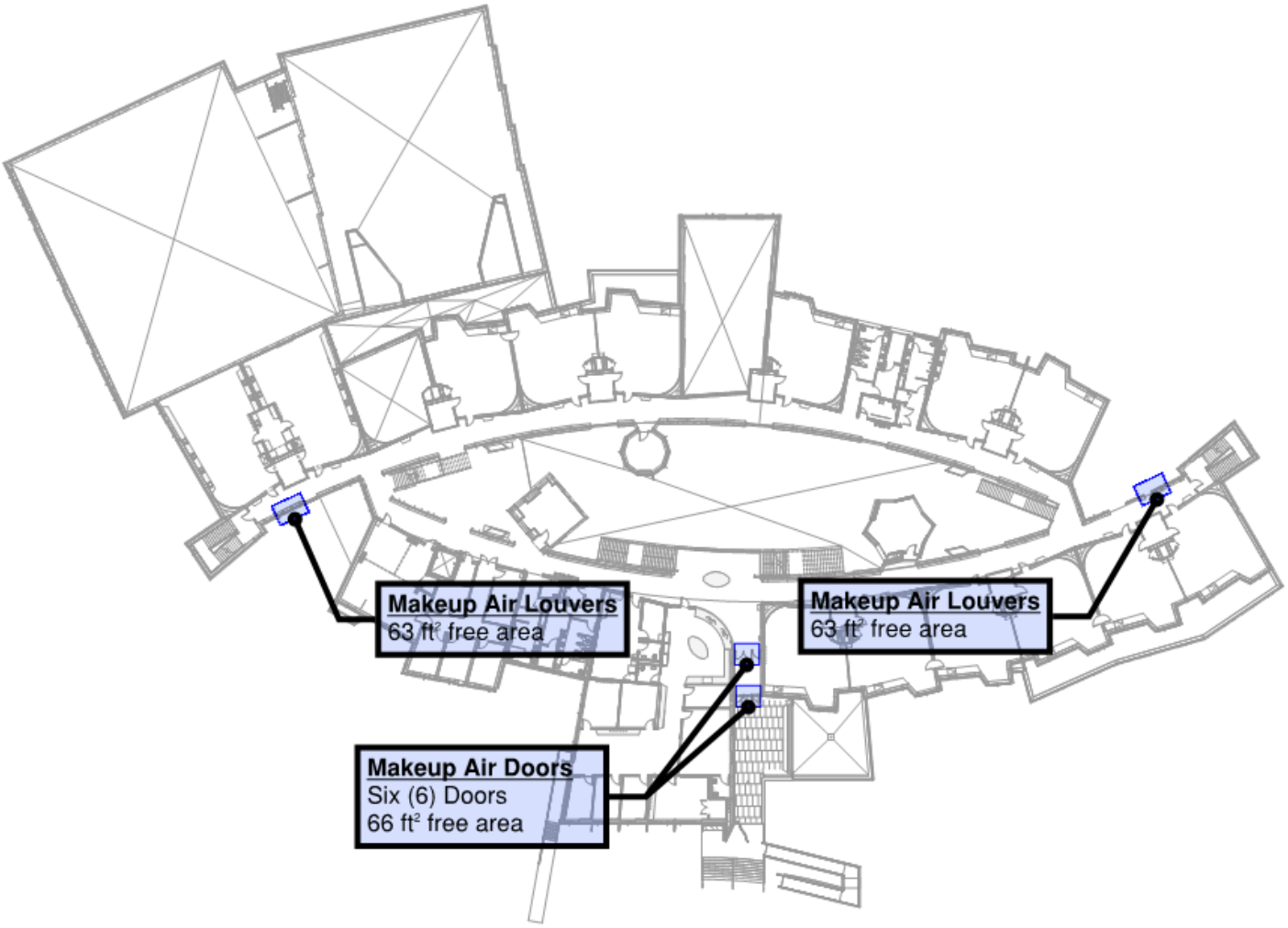

Figure 4: Makeup Air Configuration – Floor 2 (Plan View)

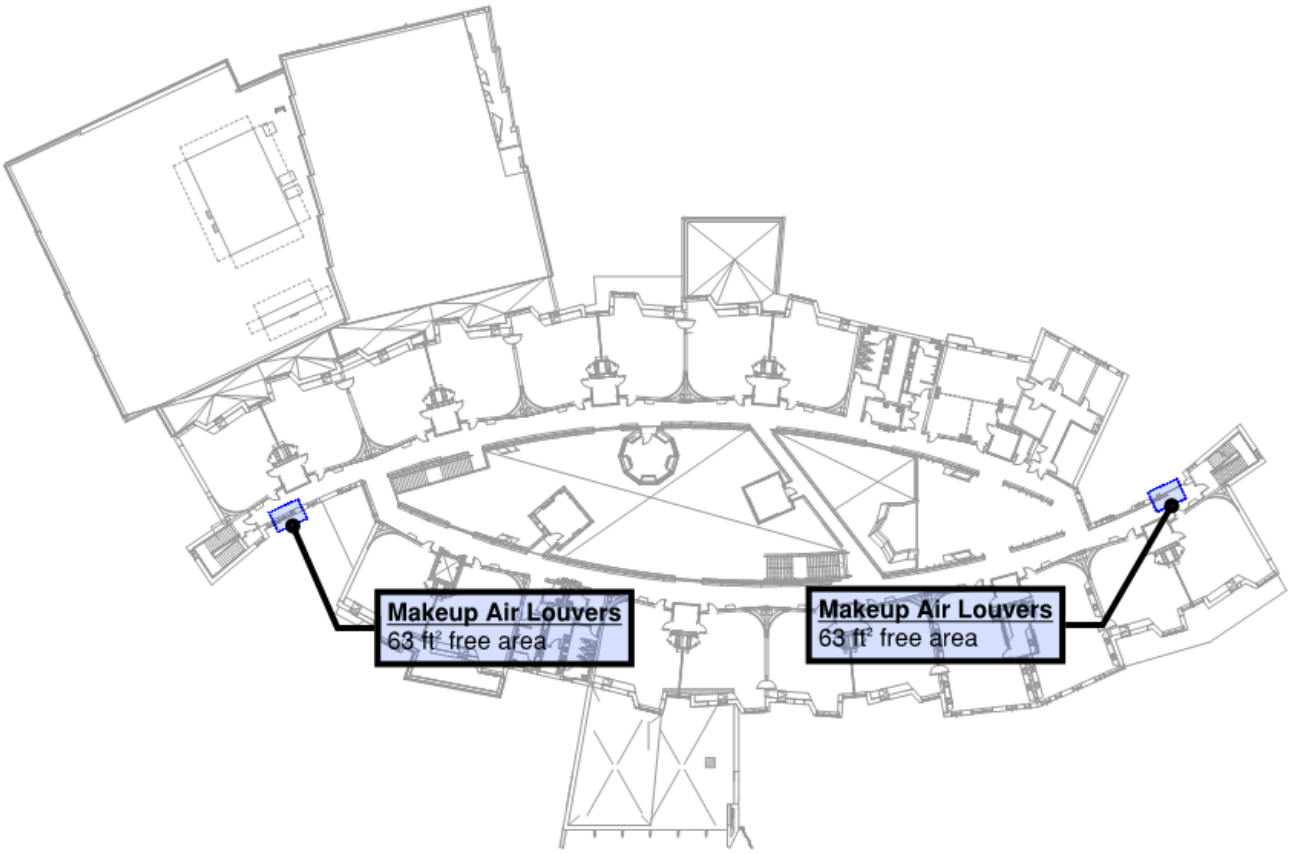

Figure 5: Makeup Air Configuration – Floor 3 (Plan View)

Since the makeup air system relies on selected exterior openings to provide air into the Atrium Zone, it is imperative that the owner maintain the required exterior areas free from any impediments that would cause the doors/louvers not to open in an emergency. Specifically, the owner must maintain the surfaces outside all doors and louvers free from obstruction, including snow/ice accumulation anytime that the building is occupied so that the doors/louvers are capable of opening at any time.

DESIGN FIRE

The single most important aspect of the Fire Protection Engineering process is the determination of the design fire for the completion of the modeling. Since, this building is an educational/assembly building that contains open spaces suitable for locating seating, tables and chairs, small displays and similar potential fuel loads, the design fire must be representative of this type of hazard.

The intent of the design fire, as one of the primary aspects of any performance-based analysis, is to be a challenging, but realistic scenario to determine factors critical to the outcome of the possible fire. Any given design fire scenario corresponds to only one of many fire conditions that could occur within a building or space. For this reason, a thorough smoke control design consists of analyzing the multiple fire scenarios considered hazardous to the building, its occupants, and its contents[1].

[1] SFPE Engineering Guide to Performance-Based Fire Protection Analysis and Design of Buildings, pgs. 41-42, NFPA, Quincy, MA, 2000

Design Fire Selection and Details

For every design fire scenario, numerous factors must be explicitly accounted for as part of the analysis. Examples of factors that may directly influence the parameters of the design fire are listed below:

- Location and form of ignition
- Initial type of fuel ignited
- Initial location of fire
- Rate of growth of the fire (particularly the severity of early stages)
- Smoke generation from the fire
- Compartment geometry and configuration at the time of the fire
- Ventilation – mechanical, natural, HVAC
- Type of construction and materials used
- Room furnishings and contents
- Fire protection and life safety systems

Based on discussions with the Design Team, it is anticipated the atrium in the Framingham Fuller Middle School will be used for the following:

- Small sitting or waiting areas, including sofas, chairs, registration desk, other furniture seating, etc. (primary use of the space).
- Circulation/Waiting space
- Low hazard meeting events (includes tables and chairs only)

As such, from a use and fuel load standpoint, the fire load in the atrium will be a light hazard assembly space. For this reason, nationally recognized, published heat release rates have been researched and fire growth computer models have been completed to determine a realistic worst-case scenario for the purposes of analyzing the atrium smoke control system. Examples of typical fuels loads found in similar spaces can be found in Appendix A.

Location Analysis

In order to provide a conservative analysis, the design fire sizes were coupled with points of convergence within the means of egress systems. These points of convergence were chosen based on the following criteria and are discussed further in the following sections of this report:

- Largest Number of Potential Exits Blocked by a Single Realistic Fire
- Largest Reduction in Available Exit Capacity by a Single Realistic Fire
- Remoteness of Secondary Means of Egress
- Building Configuration that Limits Fire Protection and Life Safety System Response

Based on a review of the building, criteria listed above, and the smoke control system exhaust and makeup air configuration, the locations identified in Figure 6 are selected as part of this rational analysis.

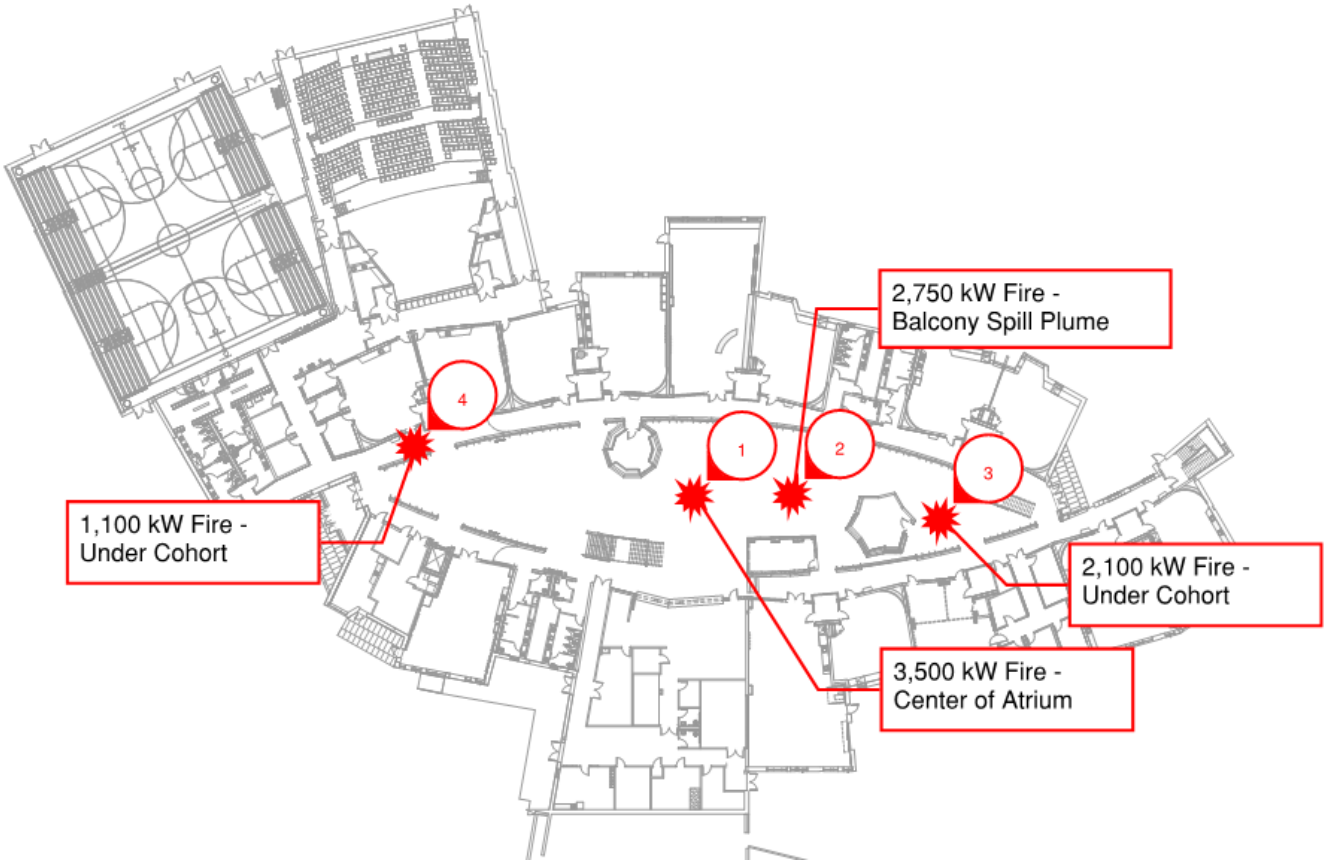

Figure 6: Floor 1 Fire Locations

Scenario 1 consists of an axisymmetric design fire located in the center of the atrium on Floor 1. Such a fire would present the largest defined fire as sprinklers are the highest above the walking surface, allowing the fire to grow to a larger size relative to other areas of the building. Larger fires typically result in larger amounts of heat and hot gas; presenting a challenging scenario. This scenario does not contemplate sprinkler activation.

Scenario 2 consists of a sprinkler-controlled balcony-spill plume fire located on Floor 1 underneath the Floor 3 walking surface within the atrium. Such a scenario presents a challenging configuration as the effects of a balcony-spill allows for the heat and hot gas to cool due to the entrainment of cool air, diluting the smoke, causing the upper gas layer to descend. As such, this is considered a challenging location for the design fire.

Scenario 3 consists of a sprinkler-controlled balcony-spill plume fire located on Floor 1 underneath the Floor 3 walking surface nearby the Floor 2 walking surface. Such a scenario presents a challenging configuration as the effects of a balcony-spill allows for the heat and hot gas to cool due to the entrainment of cool air, diluting the smoke, causing the upper gas layer to descend. As such, this is considered a challenging location for the design fire.

Scenario 4 consists of a sprinkler-controlled balcony-spill plume fire located on Floor 1, underneath the Floor 2 walking surface within the atrium and adjacent to the automatic opening louvers. Such a scenario presents a challenging configuration as the effects of a balcony-spill allows for the heat and hot gas to cool due to the entrainment of cool air, diluting the smoke and potentially causing the upper gas layer to descend. Further, by locating the fire adjacent to the automatic opening louvers, the makeup air may disrupt the fire plume further increasing the amount of air entrained in the smoke layer. The intent of this scenario is to determine if a fire on Floor 1 nearby the makeup air openings will affect the surrounding areas of the atrium as intended by the rational analysis requirements in MSBC and NFPA 92.

In a continuing effort to provide a realistic, yet conservative analysis, four (4) specific case scenarios throughout the building are analyzed to evaluate the performance of the building smoke control system. These scenarios, which are based upon the location analysis above, consist of design fires with conservative, yet realistic potential fuel loads as determined in the following sections.

Scenario 1 – Axisymmetric Design Fire Selection

It is understood that the atrium will be used primarily for circulation space and is a relatively light hazard space. From a fuel load standpoint, the atrium space may be used for housing small displays, and seating arrangements (tables and chairs, or sofas, etc.). The limitations of this fire size have been discussed with Framingham Fuller Middle School, and this fire size is based on the furniture being located within the atrium.

A sofa fire can reach peak heat release rates of approximately 3,100 kW within 500 seconds before it begins to decay due to fuel consumption. Similarly, a kiosk fires reach a peak heat release rate of 1,800 kW before the fire decays. Using the peak heat release rate of the sofa as our steady state fire value would provide for a conservative analysis. To provide for an extra margin of safety, a fast-growth, steady state fire with an addition safety factor of approximately 10% will be added to the fire size. This allows for ceiling temperatures to rise faster than anticipated due to the fast-growth nature and accumulate as the fire will note decay. **For this reason, the contemplation of a fast growth 3,500 kW steady state fire is considered conservative.** Refer to Figure 7 for a comparison of nationally publicized heat release rate growth profiles compared to the selected fire size used to analyze the smoke control system.

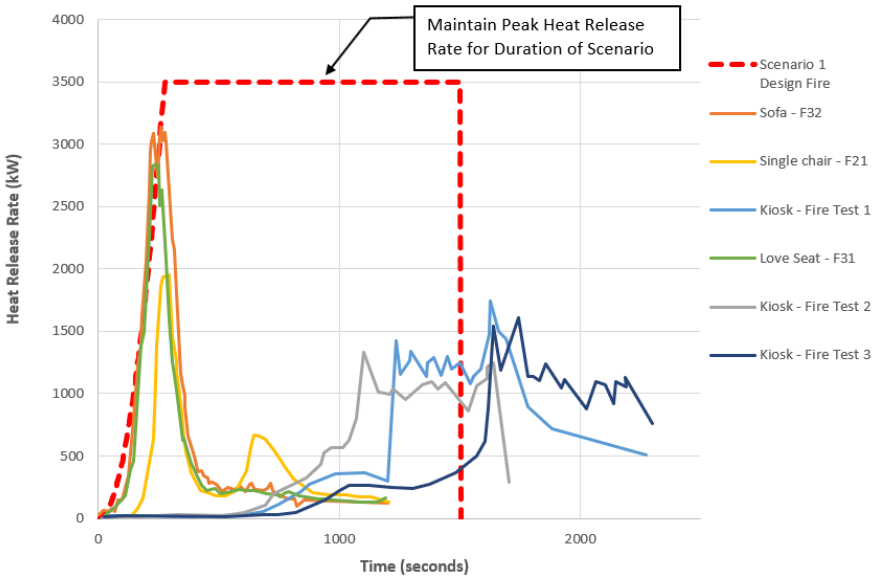

Figure 7: Kiosk Heat Release Rates with Variations

Scenario 2 – Balcony-Spill (Beneath Floor 3 Walking Surface) Design Fire Selection

When sprinklers are provided in the location where the design fire is located, NFPA 92 Section 5.2.1 indicates that the heat release rate and growth of the fire is likely to be decreased or maintained at the value that the fire has reached when sprinklers activate. MSBC Section 909.9.4 also recognizes this provision. An automatic fire sprinkler system is installed throughout the Framingham Fuller Middle School.

Sprinkler activation calculations have been completed to determine the actual heat release rates where sprinklers activate. The results of this analysis are based on the calculations developed by R.L. Alpert[2] for ceiling jet activation of a sprinkler as shown in Equation 1 and Figure 8.

Equation 1

$$T_{cj} - T_\infty = \frac{16.9 Q_{tot}^{2/3}}{H^{5/3}} \qquad \frac{r}{H} \leq 0.18\ (turning\ region)$$

$$T_{cj} - T_\infty = \frac{5.38 \left(Q_{tot}/r\right)^{2/3}}{H} \qquad \frac{r}{H} \geq 0.18$$

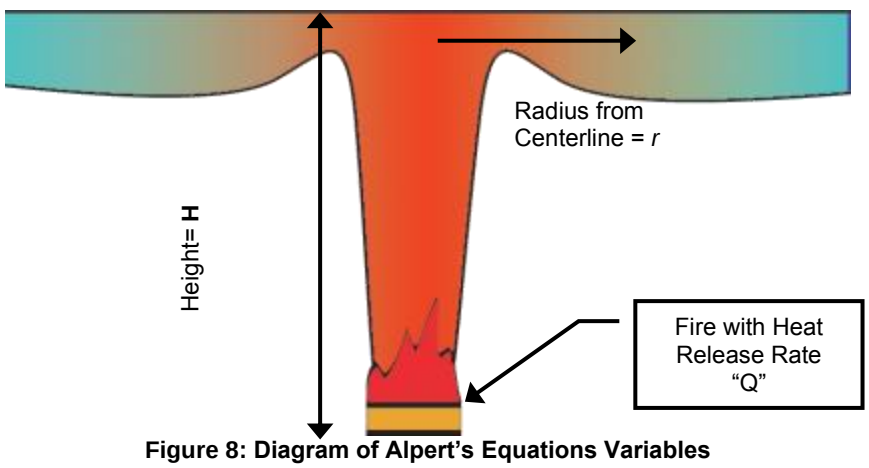

Figure 8: Diagram of Alpert's Equations Variables

By utilizing the Alpert's Ceiling Jet Temperature Correlations, it is possible to predict the temperature of the ceiling jet adjacent to the sprinkler and ultimately determine whether sprinkler activation is expected. The results of the calculation utilizing a small time step, and a fast growth rate fire, are shown in Figure 9. The equations utilized to predict the heat release rate from a fast growth rate t-squared fire as noted in Equation 2.

Equation 2

$$\dot{Q} = \alpha (t - t_v)^2$$

$$\dot{Q} = \left(\frac{1{,}055}{t_g^2}\right)(t - t_v)^2 [kW]$$

$$\dot{Q} = \left(\frac{1{,}000}{t_g^2}\right)(t - t_v)^2 [Btu/s]$$

Where:

t_g = fire growth time to 1,000 kW (1,055 BTU/s)
t_v = virtual ignition time
α = empirically determined HRR parameter (0.0468 for Fast Growth)

[2] *Ceiling Jet Flows*, p.431, Society of Fire Protection Engineers (SFPE) Handbook, 5th Edition, Springer-Verlag New York 2016

This analysis utilizes the following assumptions:

1. Sprinklers are located a maximum of approximately 26'-0" above the walking surface
2. Sprinkler activation temperature of 165°F
3. Quick response sprinklers having a maximum Response Time Index of 50 (meter-seconds)$^{1/2}$
4. Ambient temperature within the conditions spaces is 68 degrees
5. Sprinkler spacing is a maximum 15' x 15' or 225 ft^2 is provided
6. Sprinklers are within 12" of ceiling and are located in the ceiling jet region
7. Burning surface of fuel is approximately 3 feet above the walking surface

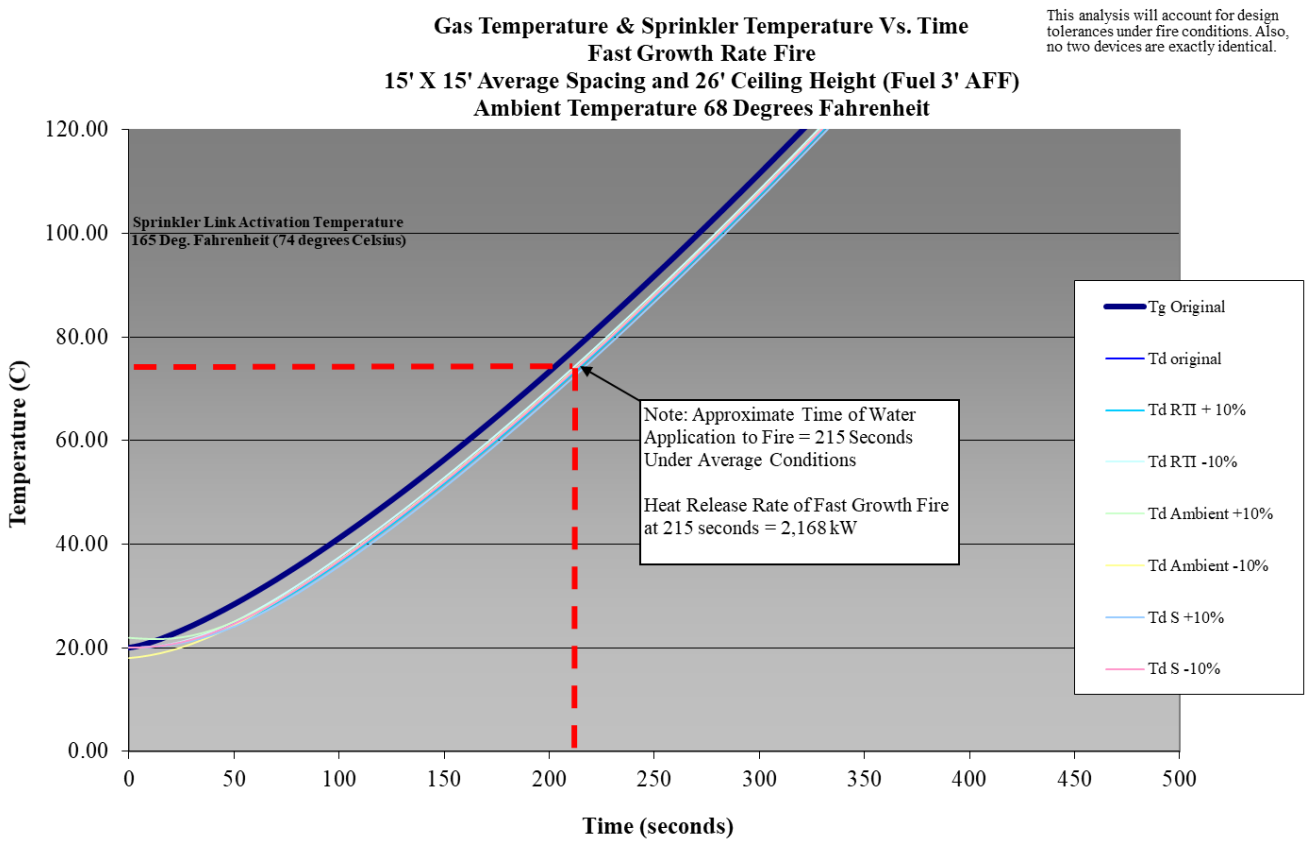

Figure 9: Scenario 2 Sprinkler Activation Calculation

The calculations completed in this section indicate that sprinklers are expected to activate at approximately 215 seconds, resulting in an anticipated fire size of 2,168 kW (Figure 9). **Therefore, to be conservative, this analysis contemplates a fast-growth, 2,750 kW steady state fire for duration of 20 minutes. This fire size provides approximately 25% factor of safety, and considering the fire is steady state accounts for the potential spread of fire to additional fuel loads within the atrium.**

Scenario 3 – Balcony-Spill (Beneath Floor 3 Walking Surface) Design Fire Selection

When sprinklers are provided in the location where the design fire is located, NFPA 92 Section 5.2.1 indicates that the heat release rate and growth of the fire is likely to be decreased or maintained at the value that the fire has reached when sprinklers activate. MSBC Section 909.9.4 also recognizes this provision. An automatic fire sprinkler system is installed throughout the Framingham Fuller Middle School.

Sprinkler activation calculations have been completed to determine the actual heat release rates where sprinklers activate. The results of this analysis are based on the calculations developed by R.L. Alpert[3] for ceiling jet activation of a sprinkler as shown in Equation 3 and Figure 10.

Equation 3

$$T_{cj} - T_\infty = \frac{16.9 Q_{tot}^{2/3}}{H^{5/3}} \qquad \frac{r}{H} \leq 0.18\ (turning\ region)$$

$$T_{cj} - T_\infty = \frac{5.38 \left(Q_{tot}/r\right)^{2/3}}{H} \qquad \frac{r}{H} \geq 0.18$$

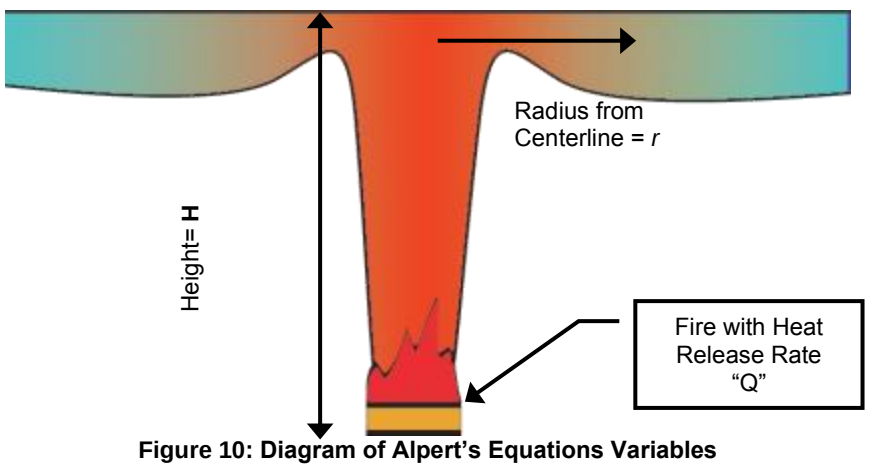

Figure 10: Diagram of Alpert's Equations Variables

By utilizing the Alpert's Ceiling Jet Temperature Correlations, it is possible to predict the temperature of the ceiling jet adjacent to the sprinkler and ultimately determine whether sprinkler activation is expected. The results of the calculation utilizing a small time step, and a fast growth rate fire, are shown in Figure 11. The equations utilized to predict the heat release rate from a fast growth rate t-squared fire as noted in Equation 4.

Equation 4

$$\dot{Q} = \alpha (t - t_v)^2$$

$$\dot{Q} = \left(\frac{1{,}055}{t_g^2}\right)(t - t_v)^2 [kW]$$

$$\dot{Q} = \left(\frac{1{,}000}{t_g^2}\right)(t - t_v)^2 [Btu/s]$$

Where:

t_g = fire growth time to 1,000 kW (1,055 BTU/s)
t_v = virtual ignition time
α = empirically determined HRR parameter (0.0468 for Fast Growth)

[3] *Ceiling Jet Flows*, p.431, Society of Fire Protection Engineers (SFPE) Handbook, 5th Edition, Springer-Verlag New York 2016

This analysis utilizes the following assumptions:

1. Sprinklers are located a maximum of approximately 26'-3" above the walking surface
2. Sprinkler activation temperature of 165°F
3. Quick response sprinklers having a maximum Response Time Index of 50 (meter-seconds)$^{1/2}$
4. Ambient temperature within the conditions spaces is 68 degrees
5. Sprinkler spacing is a maximum 10' x 13' or 130 ft^2 is provided
6. Sprinklers are within 12" of ceiling and are located in the ceiling jet region
7. Burning surface of fuel is approximately 3 feet above the walking surface

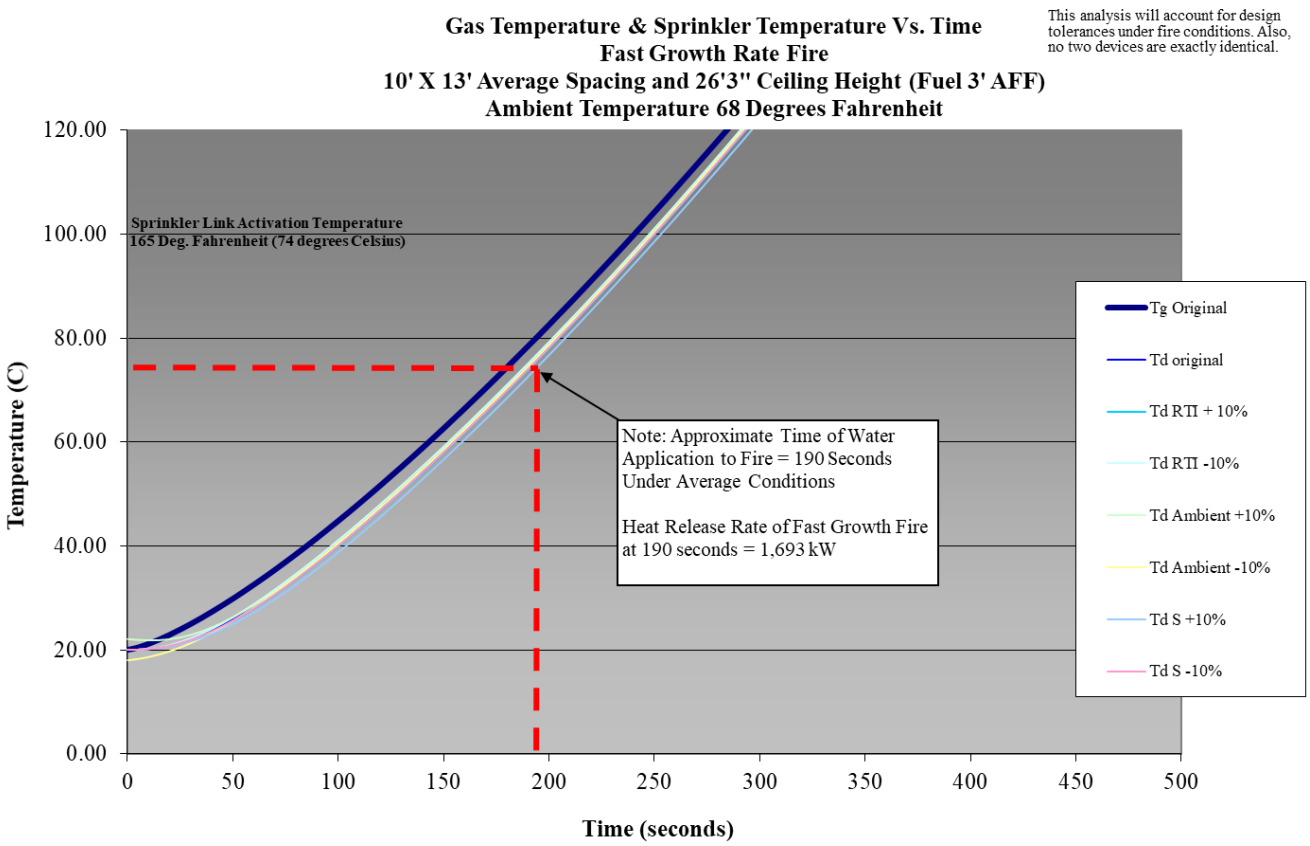

Figure 11: Scenario 3 Sprinkler Activation Calculation

The calculations completed in this section indicate that sprinklers are expected to activate at approximately 190 seconds, resulting in an anticipated fire size of 1,693 kW (Figure 11). **Therefore, to be conservative, this analysis contemplates a fast-growth, 2,100 kW steady state fire for duration of 20 minutes. This fire size provides approximately 20% factor of safety, and considering the fire is steady state accounts for the potential spread of fire to additional fuel loads within the atrium.**

Scenario 4 – Balcony-Spill (Beneath Floor 2 Walking Surface) Design Fire Selection

When sprinklers are provided in the location where the design fire is located, NFPA 92 Section 5.2.1 indicates that the heat release rate and growth of the fire is likely to be decreased or maintained at the value that the fire has reached when sprinklers activate. MSBC Section 909.9.4 also recognizes this provision. An automatic fire sprinkler system is installed throughout the Framingham Fuller Middle School.

Sprinkler activation calculations have been completed to determine the actual heat release rates where sprinklers activate. The results of this analysis are based on the calculations developed by R.L. Alpert[4] for ceiling jet activation of a sprinkler as shown in Equation 5 and Figure 12.

Equation 5

$$T_{cj} - T_\infty = \frac{16.9 Q_{tot}^{2/3}}{H^{5/3}} \qquad \frac{r}{H} \leq 0.18\ (turning\ region)$$

$$T_{cj} - T_\infty = \frac{5.38 \left(Q_{tot}/r\right)^{2/3}}{H} \qquad \frac{r}{H} \geq 0.18$$

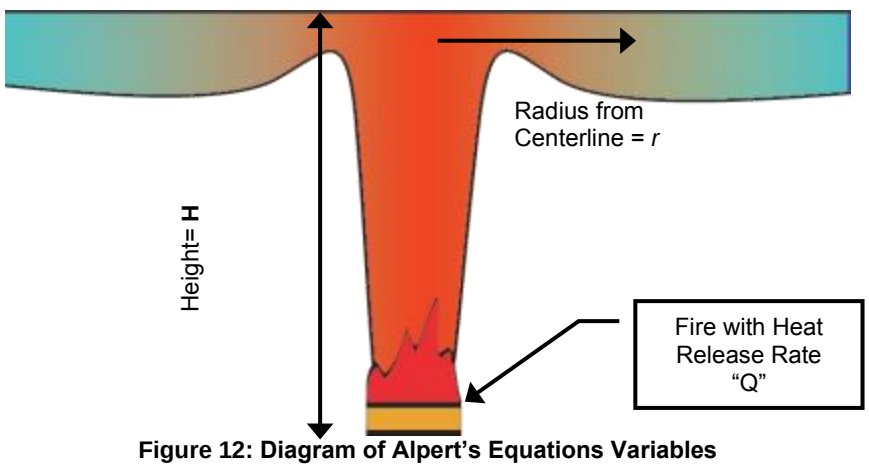

Figure 12: Diagram of Alpert's Equations Variables

By utilizing the Alpert's Ceiling Jet Temperature Correlations, it is possible to predict the temperature of the ceiling jet adjacent to the sprinkler and ultimately determine whether sprinkler activation is expected. The results of the calculation utilizing a small time step, and a fast growth rate fire, are shown in Figure 13. The equations utilized to predict the heat release rate from a fast growth rate t-squared fire as noted in Equation 6.

Equation 6

$$\dot{Q} = \alpha (t - t_v)^2$$

$$\dot{Q} = \left(\frac{1{,}055}{t_g^2}\right)(t - t_v)^2 [kW]$$

$$\dot{Q} = \left(\frac{1{,}000}{t_g^2}\right)(t - t_v)^2 [Btu/s]$$

Where:

t_g = fire growth time to 1,000 kW (1,055 BTU/s)
t_v = virtual ignition time
α = empirically determined HRR parameter (0.0468 for Fast Growth)

[4] *Ceiling Jet Flows*, p.431, Society of Fire Protection Engineers (SFPE) Handbook, 5th Edition, Springer-Verlag New York 2016

This analysis utilizes the following assumptions:

1. Sprinklers are located a maximum of approximately 12'-0" above the walking surface
2. Sprinkler activation temperature of 165°F
3. Quick response sprinklers having a maximum Response Time Index of 50 (meter-seconds)$^{1/2}$
4. Ambient temperature within the conditions spaces is 68 degrees
5. Sprinkler spacing is a maximum 15' x 15' or 225 ft^2 is provided
6. Sprinklers are within 12" of ceiling and are located in the ceiling jet region
7. Burning surface of fuel is approximately 3 feet above the walking surface

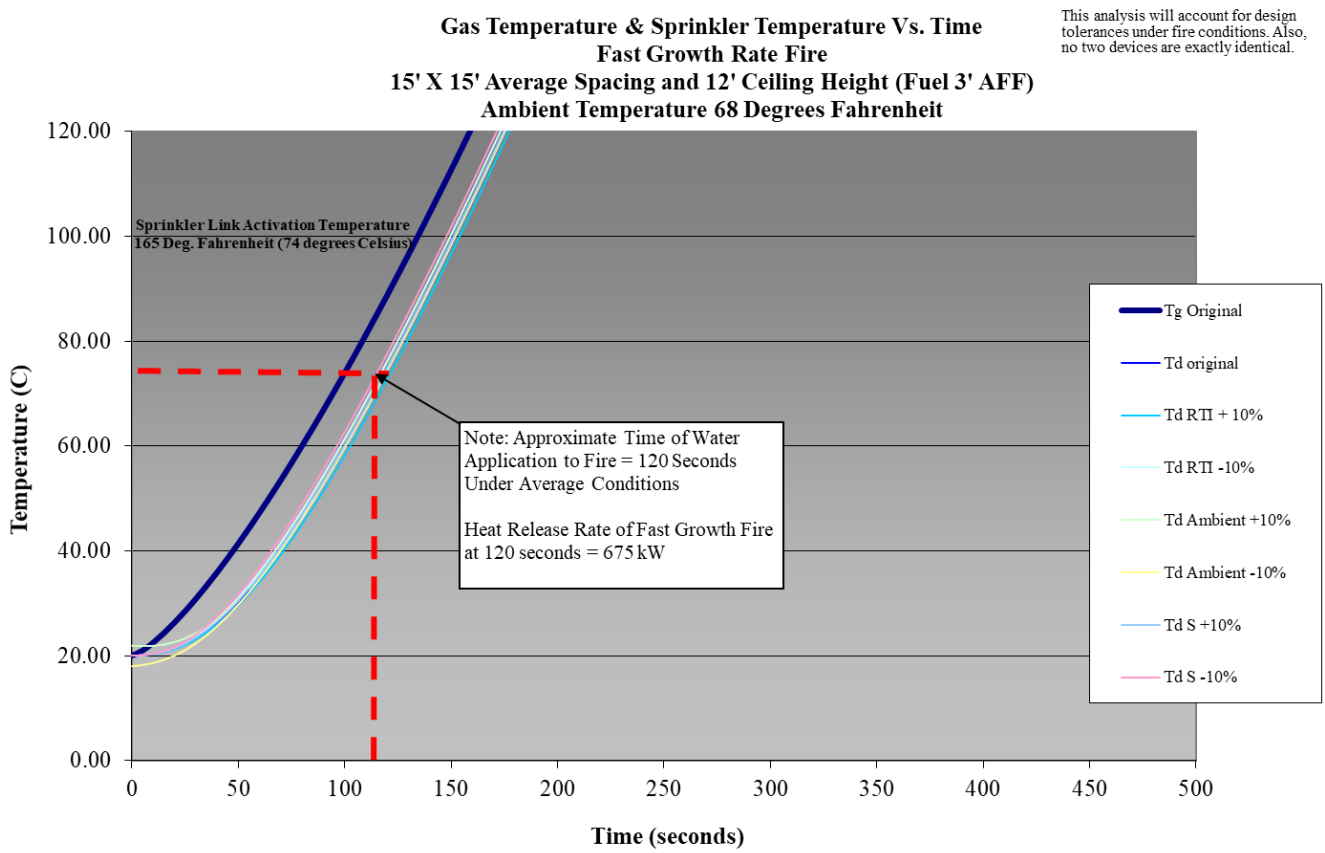

Figure 13: Scenario 4 Sprinkler Activation Calculation

The calculations completed in this section indicate that sprinklers are expected to activate at approximately 120 seconds, resulting in an anticipated fire size of 675 kW (Figure 13). **Therefore, to be conservative, this analysis contemplates a fast-growth, 1,100 kW steady state fire for duration of 20 minutes. This fire size provides approximately 50% factor of safety, and considering the fire is steady state accounts for the potential spread of fire to additional fuel loads within the atrium.**

TENABILITY CRITERIA & THRESHOLDS

There are many products of combustion that are produced by a fire. Not all of these products present an immediate hazard to humans. This report analyzes the tenability environment within the atrium for three major products of combustion during a fire scenario. These products include smoke toxicity, heat exposure (temperature), and visibility. The following sections address the end point criteria, defined as the point where occupants are no longer capable of exiting the building under their own power, for each product analyzed. The failure criteria established in this section is based on the end point thresholds with an additional safety factor to establish reasonable points of failure for the proposed smoke control system design.

SMOKE TOXICITY

Carbon Monoxide (CO), which is an asphyxiant, is one of the major products of combustion that presents a hazard to humans during a fire scenario. Carbon Monoxide inhalation creates a negative feedback loop in the following manner: the presence of increased amounts of carbon monoxide decrease the amount of oxygen consumed; as oxygen consumption decreases occupant respiratory rates increase; as occupant respiratory rates increase, the amount of carbon monoxide inhaled, increases. The intake of too much carbon monoxide leads to disorientation and possibly unconsciousness which negatively affect a person's ability to self-evacuate a building.

Although other gases are produced, carbon monoxide is the most dangerous and one of the leading causes of death from a fire. Therefore, this analysis will focus on the concentration of carbon monoxide produced throughout the atrium for each scenario. It is assumed that other gases are not as hazardous as carbon monoxide, which is consistent with national practice and statistical data. Therefore, if carbon monoxide levels are demonstrated to be acceptable, other less lethal gases will be deemed acceptable.

The toxic effects of carbon monoxide vary based on the concentration, exposure time, and overall activity of the occupants. For example, a person exercising has a higher respiratory rate than a person sitting down. Therefore, a person at higher activity levels will consume more carbon monoxide than a person at rest and will lose consciousness faster. Respiratory levels for three (3) forms of activity can be seen in Table 1.

Table 1: Respiration minute volume (RMV) (liters/min.) for a 70-kg man (*SFPE Handbook 5th Edition, Chapter 63*)

Activity level of subject	V_E (L/min)
Resting or sleeping	8.5
Light work—walking to escape	25
Heavy work—slow running, walking up stairs	50

The approximate time to loss of consciousness can be calculated based on the CO concentration produced by the design fire using the equation derived from Stewart-Peterson[5]. Stewart-Peterson's equation shown below calculates the amount of carboxyhemoglobin (COHb) produced in the blood stream, which results in a decrease in the blood's oxygen-carrying ability, based on CO concentrations. Documented endpoint criteria for the amount of COHb in one's blood stream before incapacitation has been calculated to be approximately 30-percent[6]. For the purposes of this analysis and to maintain conservatism, it is assumed every occupant is performing light work (i.e., walking around) and each will not be incapacitated for COHb levels less than 25-percent. In addition, for reference purposes, the figure below presents the time to loss of consciousness with respect to carbon monoxide concentration levels, as reproduced below (SFPE Handbook, 5th Edition, Figure 63.14).

Equation 7 (SFPE Handbook, 5th Edition, Equation 63.18)

$$\%COH_b = (3.317 \times 10^{-5})(ppmCO)^{1.036}(RMV)(t)$$

Where:

%COHb = Percentage of Carboxyhemoglobin in blood stream
PPM CO = CO concentration (PPM)
RMV = Respiratory minute volume (L/min)
t = exposure time (min)

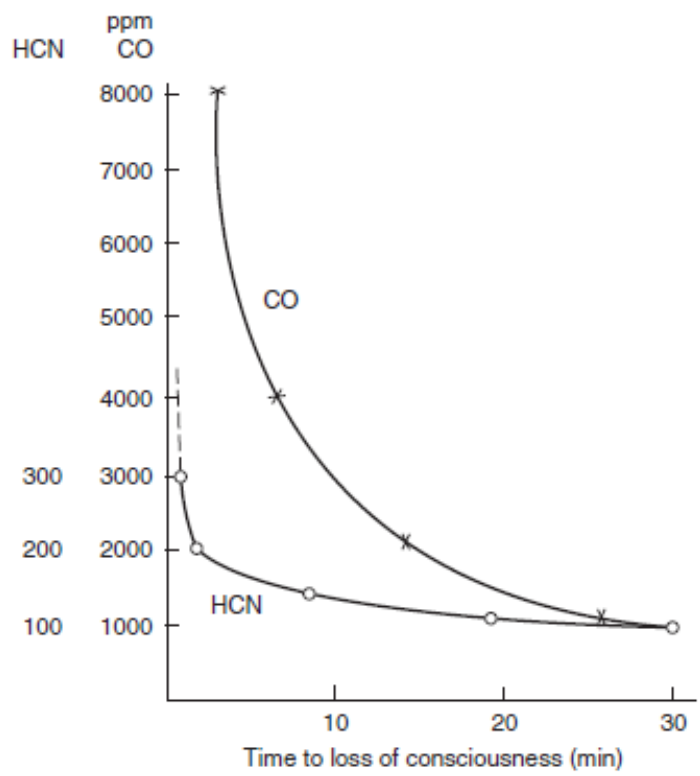

Figure 14: SFPE Handbook, 5th Edition, Figure 63.14

[5] *Assessment of Hazards to Occupants from Smoke, Toxic Gas, and Heat, p.2416, Society of Fire Protection Engineers (SFPE) Handbook, 5th Edition, Springer-Verlag New York 2016.*
[6] *Assessment of Hazards to Occupants from Smoke, Toxic Gas, and Heat, p.2332, Society of Fire Protection Engineers (SFPE) Handbook, 5th Edition, Springer-Verlag New York 2016.*

HEAT EXPOSURE

Thermal effects of a fire typically present a hazard to occupants in close proximity to a fire or within the hot smoke layer. Due to the footprint of the atrium, it is assumed occupants will be able to maintain a sufficient distance away from any fire avoiding intense amounts of heat. However, hot smoke is buoyant and will rise to create a ceiling layer of hot air/smoke that could potentially affect occupants on higher floor levels where there are low ceiling heights.

Typical results from thermal exposure experienced by humans include hyperthermia, blistering, skin burns, and respiratory tract burns. The temperature thresholds for humans with respect to humidity can be seen in Figure 15.

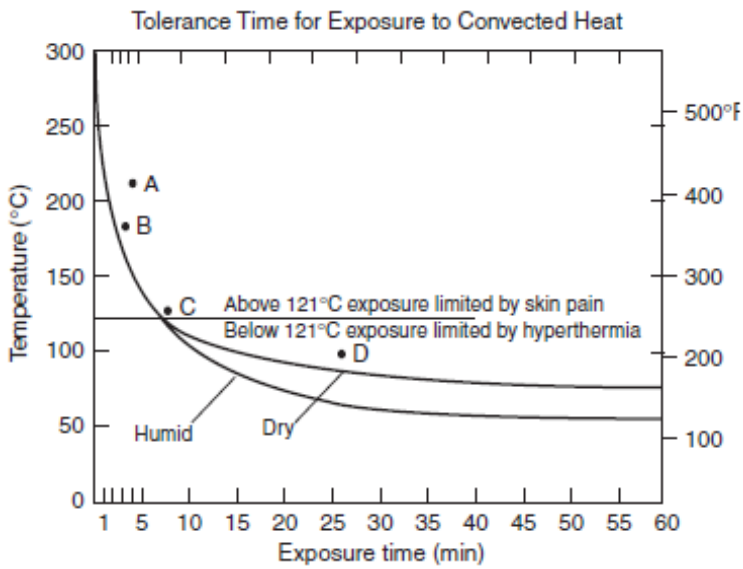

Figure 15: SFPE Handbook, 5th Edition, Figure 63.28

As shown in the figure above, humid conditions result in lower temperature thresholds; therefore, to be conservative this analysis will assume the ambient air is humid. Assuming humid conditions, occupants are expected to be capable of exiting the building under temperatures less than 140°F.

VISIBILITY

Smoke is typically the biggest threat to building occupants during a fire. Smoke reduces visibility in an egress system which creates longer evacuation times and increased exposure times to the toxic gases and heat of a fire. Different from heat and gases, a reduction in visibility will not cause direct incapacitation of occupants. The concern with a reduction in visibility is that occupants may not be able to find an exit or take excessive amounts of time to reach an exit. This concern increases substantially when occupants are unfamiliar with the building layout. Therefore, a minimum visibility distance must be maintained along the means of egress within the atrium for a minimum of 1.5 times the calculated evacuation time, or 20 minutes after detection, whichever is greater.

Several studies have been conducted that evaluate minimum visibility criteria for both occupants familiar and unfamiliar with the building layout. The research conducted by Rasbash, documented in the Society of Fire Protection Engineering Handbook, 5th Edition, was used as a base point for this analysis. The table excerpted from the SFPE Handbook (Table 2) presents approximate visibility thresholds for people in areas with small enclosures and travel distances versus area with large enclosures and travel distances[7].

Table 2: Reported Effects of Smoke on Visibility and Behavior (SFPE Handbook, 5th Edition, Table 63.5)

Smoke density and irritancy OD/m (extinction coefficient)		Approximate visibility (diffuse illumination)	Reported effects
None		Unaffected	Walking speed 1.2 m/s
0.5 (1.15)	Nonirritant	2 m	Walking speed 0.3 m/s
0.2 (0.5)	Irritant	Reduced	Walking speed 0.3 m/s
0.33 (0.76)	Mixed	3 m approx.	30 % people turn back rather than enter
Suggested tenability limits for buildings with:			
Small enclosures and travel distances:		OD/m 0.2 (visibility 5 m)	
Large enclosures and travel distances:		OD/m 0.08 (visibility 10 m)	

For the purpose of this analysis, the atrium walking surfaces are considered large enclosures and must maintain a visibility threshold of 10 meters. Narrow corridors that are outside the main atrium and within the atrium bounds must maintain a minimum visibility threshold of 5 meters along the centerline of the corridors. Note that such tenability criteria will be analyzed in areas that are not intimate with the fire.

[7] *Assessment of Hazards to Occupants from Smoke, Toxic Gas, and Heat*, p.2339, Society of Fire Protection Engineers (SFPE) Handbook, 5th Edition, Springer-Verlag New York 2016.

CFD MODELING ANALYSIS

The following sections outline the information utilized when determining the fire properties, as well as the pass/fail criteria for this assessment.

GENERAL CFD MODELING PARAMETERS ASSUMPTIONS

Along with well-established principles of engineering based on fire tests and historical data, this rational analysis will utilize the three-dimensional computational fluid dynamics computer model Fire Dynamics Simulator (FDS). When performing such analysis with FDS, an accurate combustion model, requires knowledge of the expected commodities that will be present, and must be specified. The design fire contemplates the burning of kiosks/displays, as well as a plastic blend foam cushioned furniture. To model this behavior, the following fuel and environment parameters were selected to represent an anticipated mixed fuel load. General assumptions and critical input parameters for the model were as follows:

1. Mixture Fraction
    - C = 4.56
    - H = 6.56
    - O = 2.34
    - N = 0.4
    - CO_Yield – 0.018
    - Soot_Yield – 0.05
    - Heat of Combustion – 22 kJ/g
2. Emissivity – 0.9
3. Visibility Factor – 8 for Light Emitting Signage

The values listed above are based on large-scale testing, along with well-established principles of engineering based on fire tests and historical data. A 22 kJ/g fuel load, as well as the mixture fraction, and CO and soot yields indicated above, is a conservative measurement for a fuel that is composed of 60-percent cellulosic blend and 40-percent plastic blend mixture. Such factors are an average for the use of the natural cellulose materials and for a plastic material in a 60-percent cellulosic blend and 40-percent plastic blend. The heat of combustion and soot yields are derived from Table 3-4.16 of the SFPE Handbook, 4th Edition.

FDS MESH RESOLUTION

All FDS calculations must be performed within a domain that is made up of rectilinear volumes called “meshes”. Each mesh is subdivided into thousands of uniform rectangular cells, the number of which depends on the desired resolution of the flow dynamics. When determining the appropriate mesh resolution, multiple factors must be considered. For simulations involving buoyant plumes, such as those included within this analysis, a measure of how well the flow field is resolved is given by the non-dimensional expression $D^*/\delta x$, where D^* is a characteristic fire diameter and δx is the nominal size of a mesh cell. D^* is calculated utilizing Equation 8 below. The reference (Verification and Validation of Selected Fire Models for Nuclear Plant Applications. NUREG 1824, United States Nuclear Regulatory Commission, 2007) states that FDS could accurately resolve fires when using a $D^*/\delta x$ value between 4 and 16. The values used for each fire scenario are presented in Table 3.

Equation 8

$$D^* = \left(\frac{\dot{Q}}{\rho\infty\ cp\ T\infty\ \sqrt{g}}\right)^{2/5}$$

Where:

$\dot{Q}$ = Heat Release Rate (kW)
$\rho\infty$ = density = 1.204kg/m^3
cp = specific heat = 1.005 kJ/Kg-K
$T\infty$ = 293 K
g = gravitational acceleration = 9.8 m/s^2

Table 3: Mesh Resolution

Scenario	Fire Size	Grid Spacing (δx)	D*/δx Desired Range	D*/δx
1	3,500 kW	0.25 m	4 – 16 Based off reference within the FDS User Guide.	6.35
2	2,750 kW	0.25 m		5.77
3	2,100 kW	0.25 m		5.18
4	1,100 kW	0.25 m		4.00

CFD Results

The criteria and design assumptions described in the sections above were inputted into FDS, a computational fluid dynamics model, and each design fire scenarios, as listed in Table 4, were simulated for a duration of 20 minutes after initial detection or 1.5 times the calculated egress time, whichever is greater. Refer to Appendix C for additional information on the Timed Egress Modeling performed as part of this overall analysis.

Table 4: Fire Scenario Summary

Scenario	Location	Fire Size	Design Fire Comments
1	Floor 1 – Axisymmetric – Center of Atrium	3,500 kW	Axisymmetric design fire. Fire located in a sprinklered area. Sprinkler activation is not contemplated. Fast-growth fire profile (α = 0.0469 kW/s^2).
2	Floor 1 – Balcony-Spill Plume (Beneath Floor 3 Walking Surface)	2,750 kW	Balcony-spill design fire. Fire located in a sprinklered area. Fire is controlled by sprinkler activation. Fast-growth fire profile (α = 0.0469 kW/s^2).
3	Floor 1 – Balcony-Spill Plume (Beneath Floor 3 Walking Surface)	2,100 kW	Balcony-spill design fire. Fire located in a sprinklered area. Fire is controlled by sprinkler activation. Fast-growth fire profile (α = 0.0469 kW/s^2).
4	Floor 1 – Balcony-Spill Plume (Beneath Floor 2 Walking Surface)	1,100 kW	Balcony-spill design fire. Fire located in a sprinklered area. Fire is controlled by sprinkler activation. Fast-growth fire profile (α = 0.0469 kW/s^2).

This section presents the results of the FDS computer model, which incorporates the following exhaust and makeup air values in the referenced Scenarios.

- **Exhaust Configuration**
  - 240,000 CFM of mechanically driven exhaust air
    - Exhaust air is provided via multiple points (refer to Figure 1 and Figure 2).

- **Supply Configuration**
  - Floor 1 (refer to Figure 3):
    - Automatic Openings
      - Two (2) louvers providing a minimum of 63 ft^2 of free area each
  - Floor 2 (refer to Figure 4):
    - Automatic Doors / Openings
      - Three (3) exterior single-leaf doors and three (3) interior single-leaf doors providing a minimum of 66 ft^2 of free area
      - Two (2) louvers providing a minimum of 63 ft^2 of free area each
  - Floor 3 (refer to Figure 5):
    - Automatic Openings
      - Two (2) louvers providing a minimum of 63 ft^2 of free area each

Although there are a number of aspects of the construction process and tightness of building construction that can affect the velocities, it is anticipated that the average velocities experienced in the field for the building are expected to be within +/- 10% of the predicted values included within the model. It is important to note that some small/localized areas in the areas adjacent to the doors may experience velocities higher than the averages noted herein. These higher velocities may be considered acceptable as long as the average velocities are consistent with the modeling analysis. Specifically, the computer modeling analysis contained herein takes into account effect of the increased velocities at the potential fire locations and their effect on the smoke production rates as required by NFPA 92. As a result, these velocities are allowed in accordance with this engineering analysis, the smoke control system design, and NFPA 92.

Utilizing the above listed smoke control configuration, and as illustrated in Figure 16, the maximum predicted air velocity within the atrium at a location where a potential fuel load may be present is approximately 748 feet per minute and does not impact the smoke control system's ability to maintain tenable conditions.

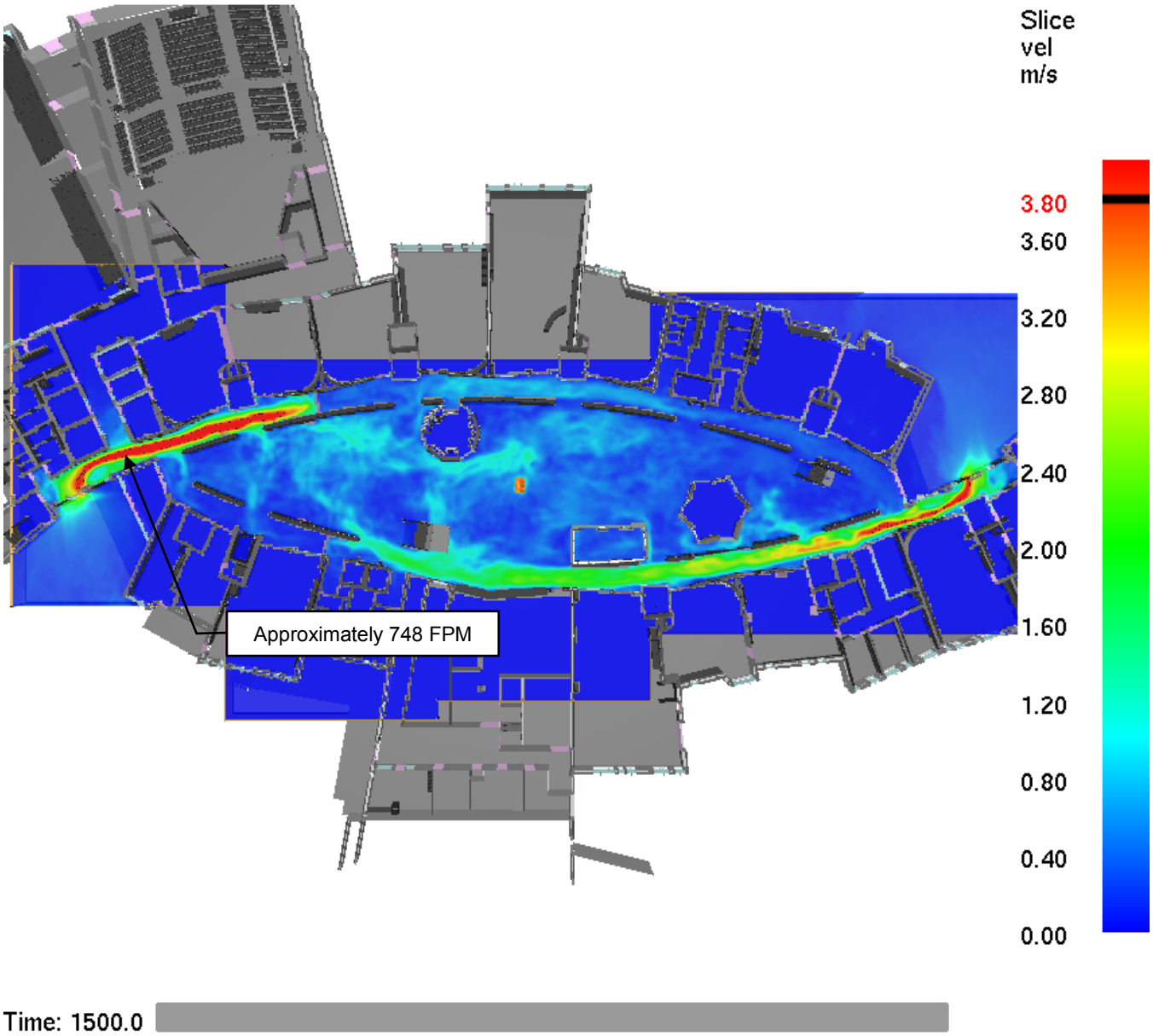

Figure 16: Predicted Makeup Air Velocity – Floor 1 (Plan View)

For more detailed information, the Output File generated from FDS can be submitted upon request.

Scenario 1 – 3,500 kW Axisymmetric Fire Results

Scenario 1 consists of an axisymmetric 3,500 kW fire located in the center of the atrium on Floor 1. The fire size is based on conservative assumptions and fire test data. The fire is allowed to grow to full size before sprinklers activate and control the fire, allowing it to remain at steady state. Such a scenario presents a very conservative assumption as such fires will decay once the fuel is burned up.

As required by the MSBC, the mechanical exhaust smoke control system must be designed and capable of maintaining tenable conditions 6 feet above the highest walking surface for a minimum of 20 minutes after fire detection or 1.5 times the calculated egress time, whichever is greater. The means of detection in Scenario 1 consists of beam detection located across the ceiling of the atrium. Beam detectors are spaced a maximum of 30-feet apart, and the model assumes an obscuration of 20%, such a setpoint is typical for beam obscuration detection. The use of this detection configuration does not preclude other means of detection such as an air sampling system, or spot-type smoke detection located along underside of the ceiling/roof, as such configurations would provide equivalent levels of detection modeled herein. As a result of such a modeled configuration, detection is noted to occur within 42 seconds. Therefore, tenability criteria for Scenario 1 is analyzed for a minimum of 1,242 seconds of simulation time, as this is greater than 1.5 times the calculated egress time (refer to Appendix C for additional information). The following subsections outline the tenability results recorded for the duration of the scenario.

SCENARIO 1 SMOKE TOXICITY RESULTS

As discussed in the Design Assumptions section, carbon monoxide concentration levels were analyzed for the duration of the design fire. From the results, it is possible to determine the worst-case carbon monoxide (CO) concentration levels and where they occur within the occupied portions of the building. As the design fire progressed, concentration levels of CO six (6) feet above each occupied level were recorded with a maximum concentration level of less than 52.2 parts per million (PPM). See screen shots of the model below for illustrative results.

Using a maximum CO concentration of 52.2 PPM, the maximum exposure time before a human becomes incapacitated can be calculated. As discussed above, it is assumed a person may become incapacitated at COHb levels greater than 25-percent within the bloodstream. Using the calculations below, a person would need to be exposed to such conditions within the spaces for over 8.33 hours (500 minutes) during the design fire before they would become incapacitated from the effects of CO. This carbon monoxide concentration would provide occupants with more than enough time to evacuate the building and is considered acceptable conditions.

$$\%COH_b = (3.317 \times 10^{-5})(ppmCO)^{1.036}(RMV)(t)$$

$$(t) = \frac{\%COH_b}{(3.317 \times 10^{-5})(ppmCO)^{1.036}(RMV)}$$

$$(t) = \frac{25\%}{(3.317 \times 10^{-5})(52.2)^{1.036}(25)} = 500\ min$$

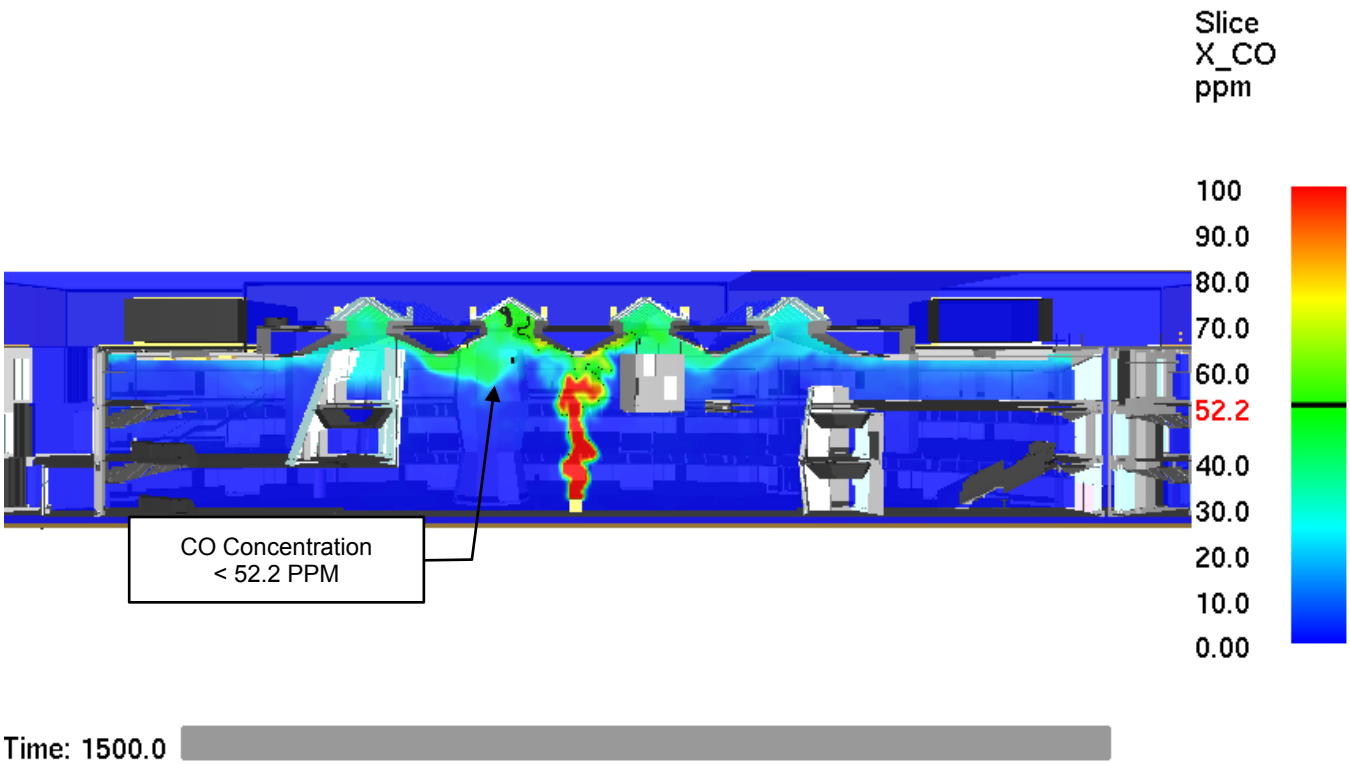

Figure 17: Scenario 1 – Section View through Fire of CO Concentration

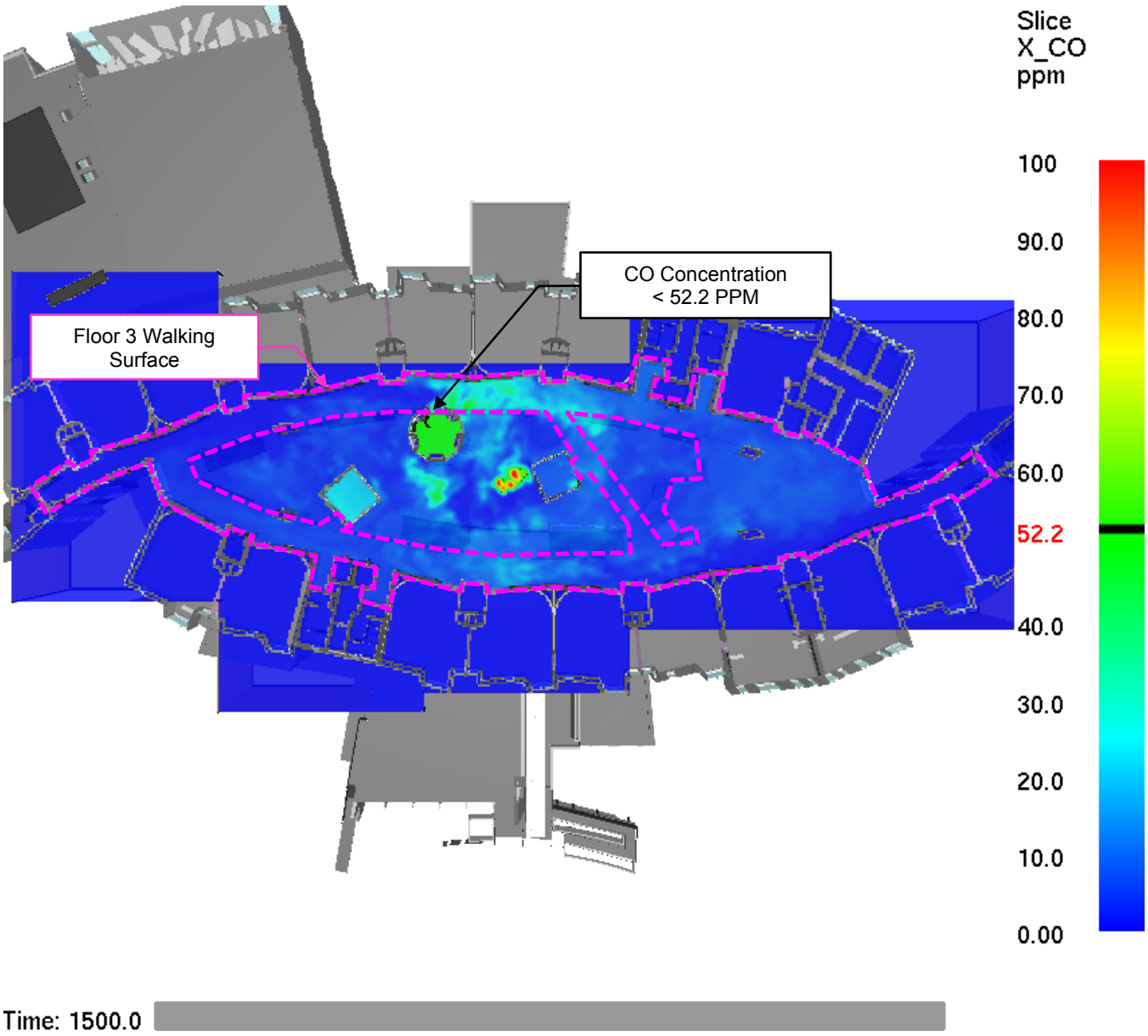

Figure 18: Scenario 1 – CO concentration 6 ft. above Floor 3 Walking Surface

SCENARIO 1 HEAT EXPOSURE RESULTS

The second product of combustion analyzed within the FDS model was temperature. Beginning with an ambient temperature of 68°F, temperature levels were recorded throughout the atrium for the duration of the design fire to determine where the worst-case conditions occur.

As shown in the screen shot captured below, similar to the carbon monoxide concentration, the highest temperature levels occur at the highest levels of the atrium within the smoke filling space. This can be expected because hot air is buoyant and will rise to the ceiling. As the design fire progressed, temperature levels continued to increase 6 feet above the walking surface with a small portion exceeding the maximum temperature level of 140°F. These elevated temperatures were intermittent and brief. Since the average temperature in the atrium is below the 140°F threshold for human tolerance, and the small portion exceeding 140°F was intermittent and brief, the temperature levels are considered acceptable.

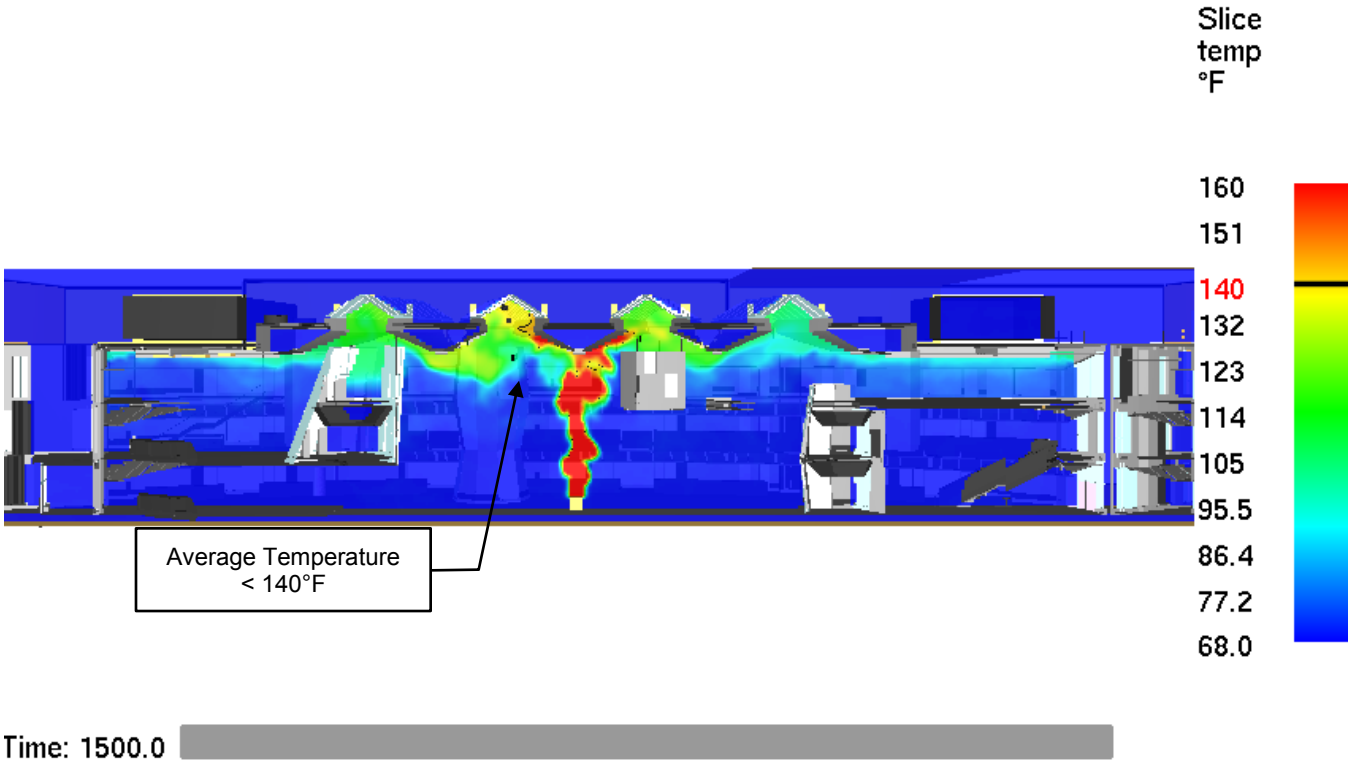

Figure 19: Scenario 1 – Section View through Fire of Temperature

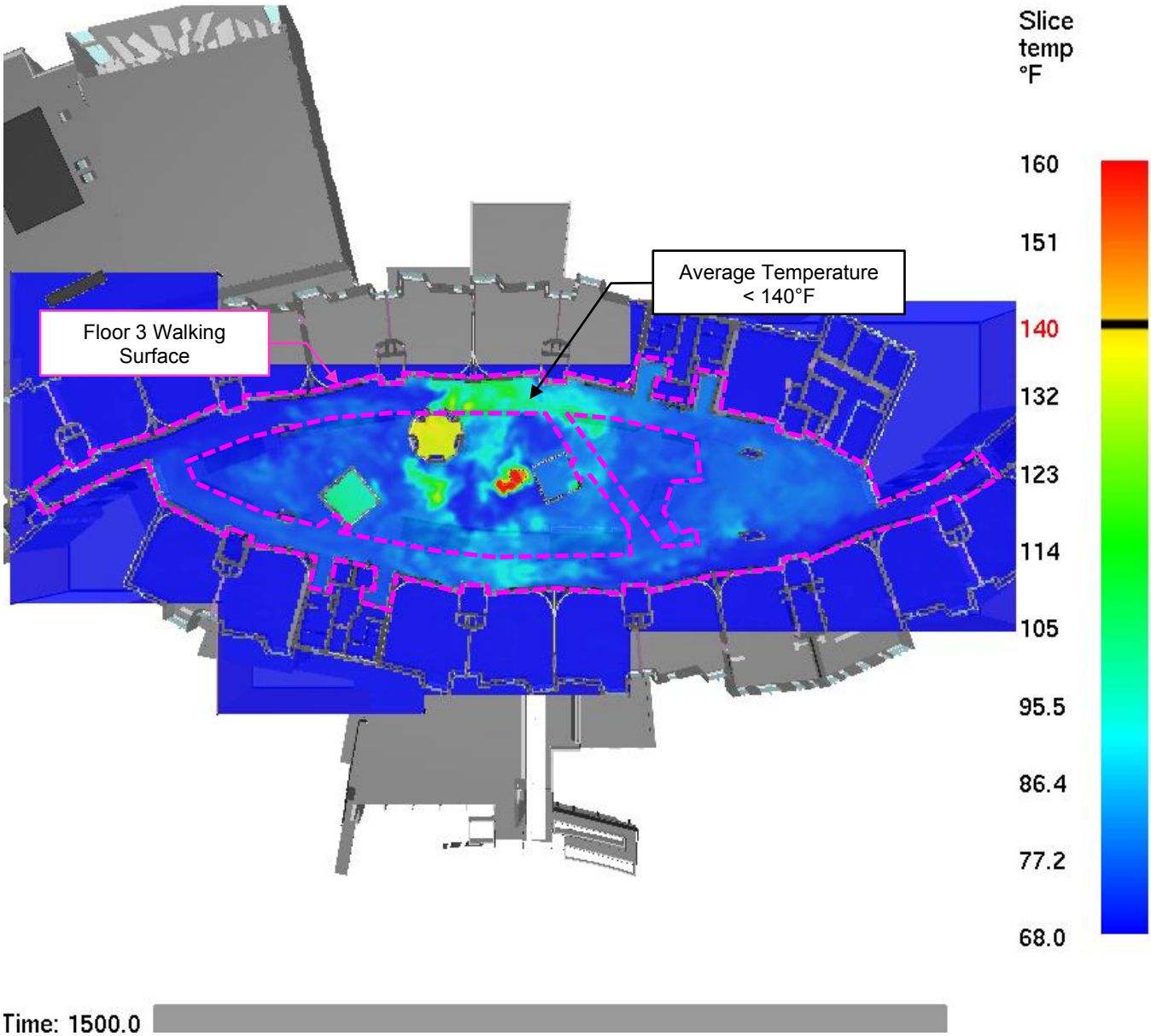

Figure 20: Scenario 1 – Temperature 6 ft. above Floor 3 Walking Surface

SCENARIO 1 VISIBILITY RESULTS

Lastly, visibility conditions were analyzed and recorded within the FDS model throughout the atrium for the duration of the design fire to determine where the worst-case conditions occur. As shown in the screen shots captured below, visibility levels were maintained above the 10-meter tenability threshold in the large atrium spaces over the majority of the means of egress system walking surface. There were small intermittent pockets of reduced visibility, although they were of short duration (less than 60 seconds) and for that reason are acceptable. The visibility levels calculated in the model are sufficient to see all walls and exit signs along the means of egress and is therefore considered acceptable conditions.

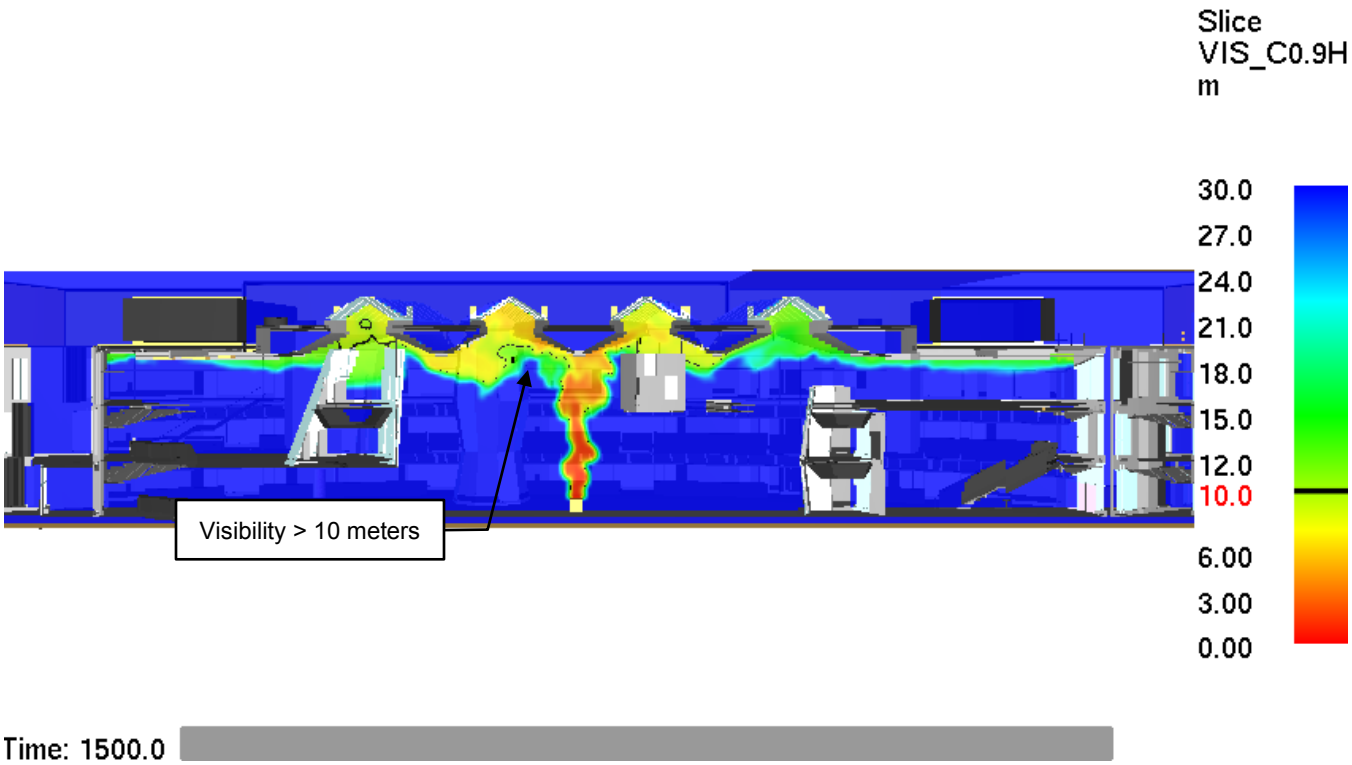

Figure 21: Scenario 1 – Section View through Fire of Visibility

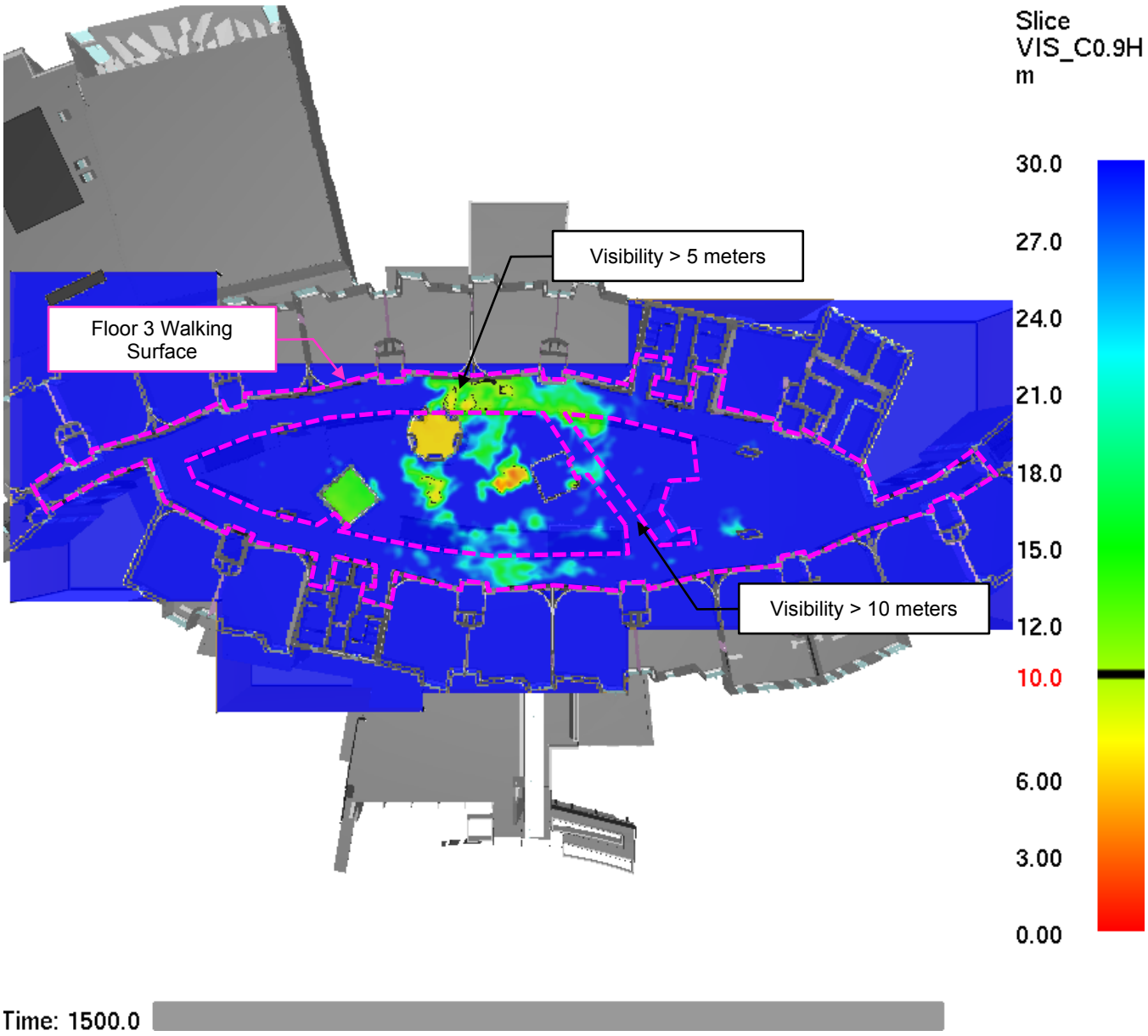

Figure 22: Scenario 1 – Visibility 6 ft. above Floor 3 Walking Surface

Scenario 2 – 2,750 kW Balcony-Spill (Beneath Level 3 Walking Surface) Fire Results

Scenario 2 consists of a balcony-spill plume 2,750 kW fire located beneath the Level 3 walking surface. The fire size is based on conservative assumptions and fire test data. The fire is allowed to grow to full size before sprinklers activate and control the fire, allowing it to remain at steady state. Such a scenario presents a very conservative assumption as such fires will decay once the fuel is burned up.

As required by the MSBC, the mechanical exhaust smoke control system must be designed and capable of maintaining tenable conditions 6 feet above the highest walking surface for a minimum of 20 minutes after fire detection or 1.5 times the calculated egress time, whichever is greater. The means of detection in Scenario 2 consists of beam detection located across the ceiling of the atrium. Beam detectors are spaced a maximum of 30-feet apart, and the model assumes an obscuration of 20%, such a setpoint is typical for beam obscuration detection. The use of this detection configuration does not preclude other means of detection such as an air sampling system, or spot-type smoke detection located along underside of the ceiling/roof, as such configurations would provide equivalent levels of detection modeled herein. As a result of such a modeled configuration, detection is noted to occur within 51 seconds. Therefore, tenability criteria for Scenario 2 is analyzed for a minimum of 1,251 seconds of simulation time, as this is greater than 1.5 times the calculated egress time (refer to Appendix C for additional information). The following subsections outlines the tenability results recorded for the duration of the scenario.

SCENARIO 2 SMOKE TOXICITY RESULTS

As discussed in the Design Assumptions section, carbon monoxide concentration levels were analyzed for the duration of the design fire. From the results, it is possible to determine the worst-case carbon monoxide (CO) concentration levels and where they occur within the occupied portions of the building. As the design fire progressed, concentration levels of CO six (6) feet above each occupied level were recorded with a maximum concentration level of less than 41.6 parts per million (PPM). See screen shots of the model below for illustrative results.

Using a maximum CO concentration of 41.6 PPM, the maximum exposure time before a human becomes incapacitated can be calculated. As discussed above, it is assumed a person may become incapacitated at COHb levels greater than 25-percent within the bloodstream. Using the calculations below, a person would need to be exposed to such conditions within the spaces for over 10.55 hours (633 minutes) during the design fire before they would become incapacitated from the effects of CO. This carbon monoxide concentration would provide occupants with more than enough time to evacuate the building and is considered acceptable conditions.

$$\%COH_b = (3.317 \times 10^{-5})(ppmCO)^{1.036}(RMV)(t)$$

$$(t) = \frac{\%COH_b}{(3.317 \times 10^{-5})(ppmCO)^{1.036}(RMV)}$$

$$(t) = \frac{25\%}{(3.317 \times 10^{-5})(41.6)^{1.036}(25)} = 633\ min$$

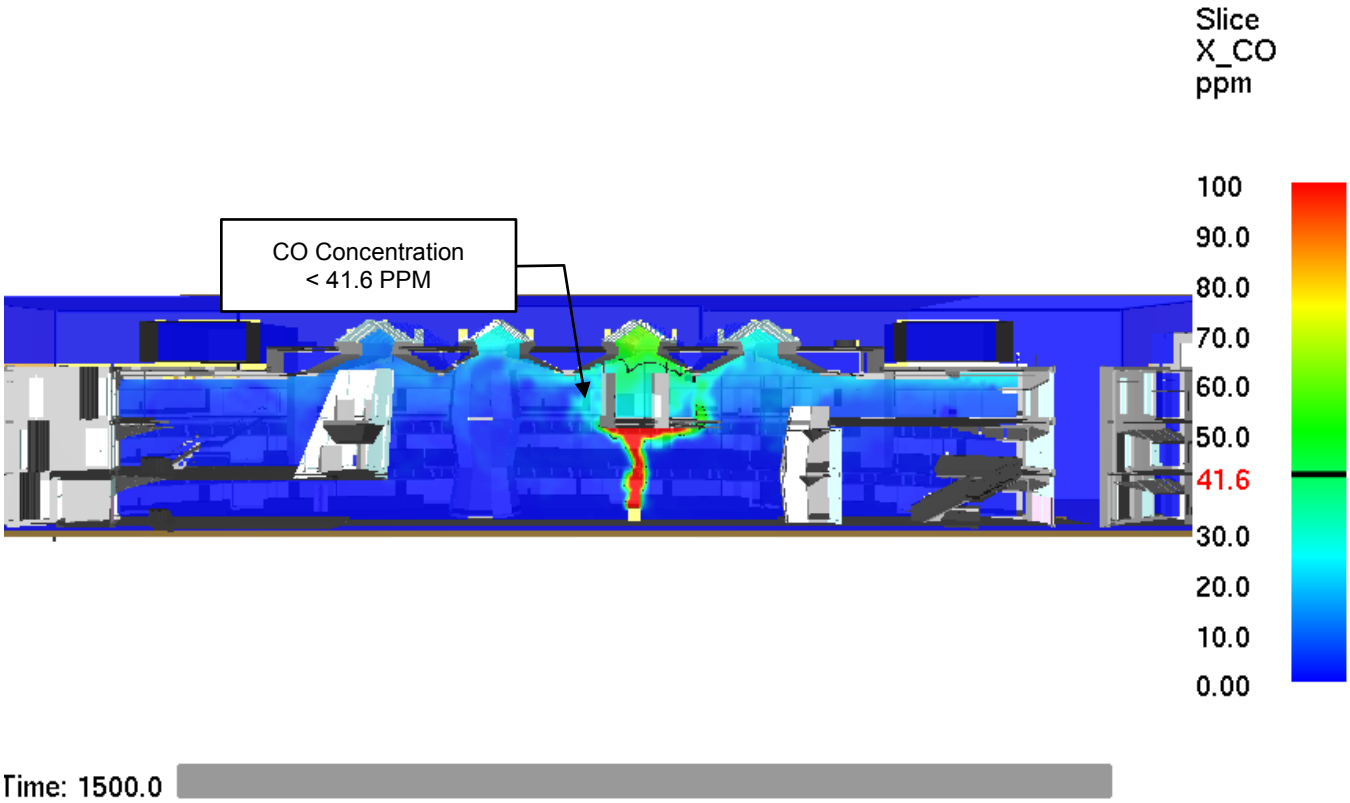

Figure 23: Scenario 2 – Section View through Fire of CO Concentration

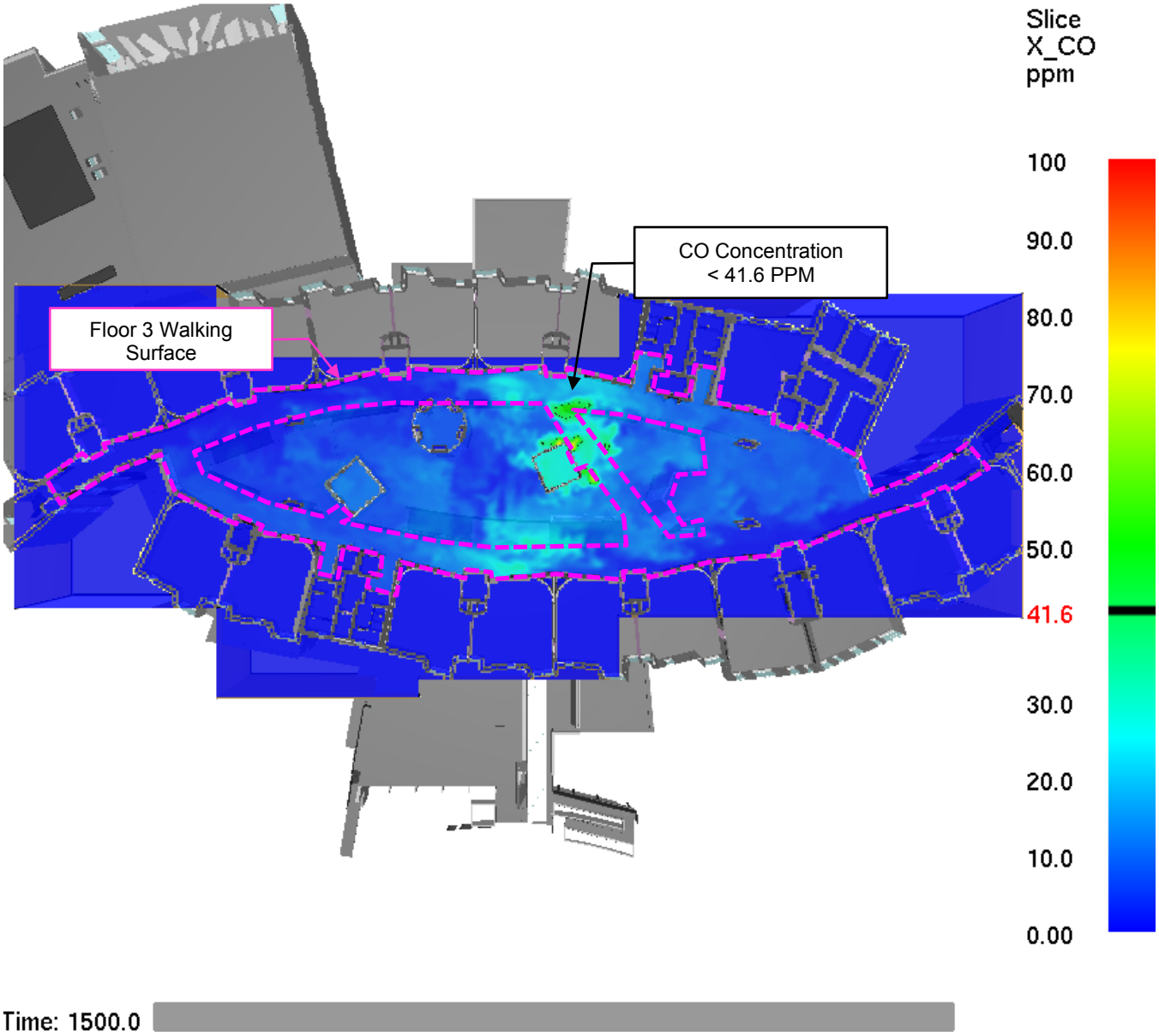

Figure 24: Scenario 2 – CO concentration 6 ft. above Floor 3 Walking Surface

SCENARIO 2 HEAT EXPOSURE RESULTS

The second product of combustion analyzed within the FDS model was temperature. Beginning with an ambient temperature of 68°F, temperature levels were recorded throughout the atrium for the duration of the design fire to determine where the worst-case conditions occur.

As shown in the screen shot captured below, similar to the carbon monoxide concentration, the highest temperature levels occur at the highest levels of the atrium within the smoke filling space. This can be expected because hot air is buoyant and will rise to the ceiling. As the design fire progressed, temperature levels continued to increase 6 feet above the walking surface with a small portion exceeding the maximum temperature level of 140°F. This occurs along the walking surface directly above the fire, in addition these elevated temperatures were intermittent and brief. Since the average temperature in the atrium is below the 140°F threshold for human tolerance, and the small portion exceeding 140°F was intermittent and intimate with the fire plume, the temperature levels are considered acceptable.

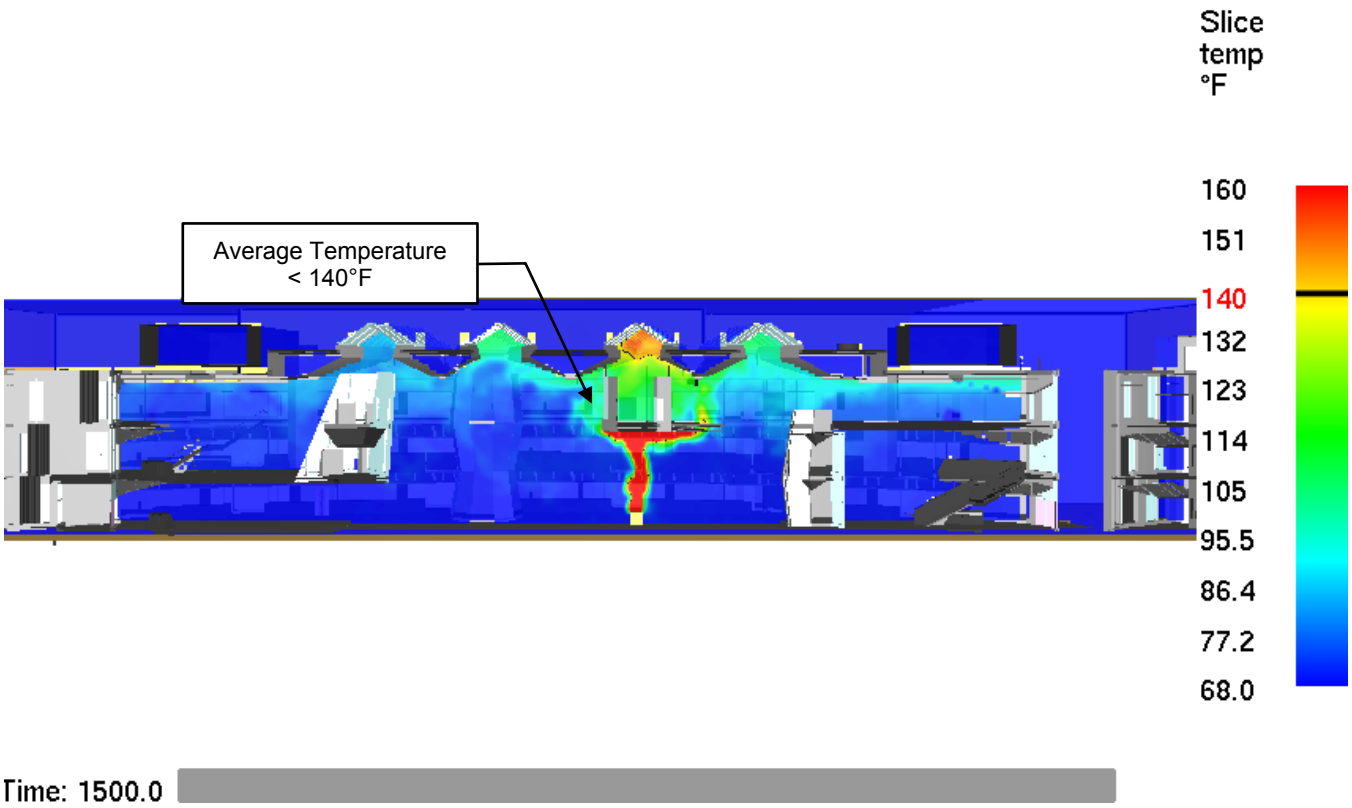

Figure 25: Scenario 2 – Section View through Fire of Temperature

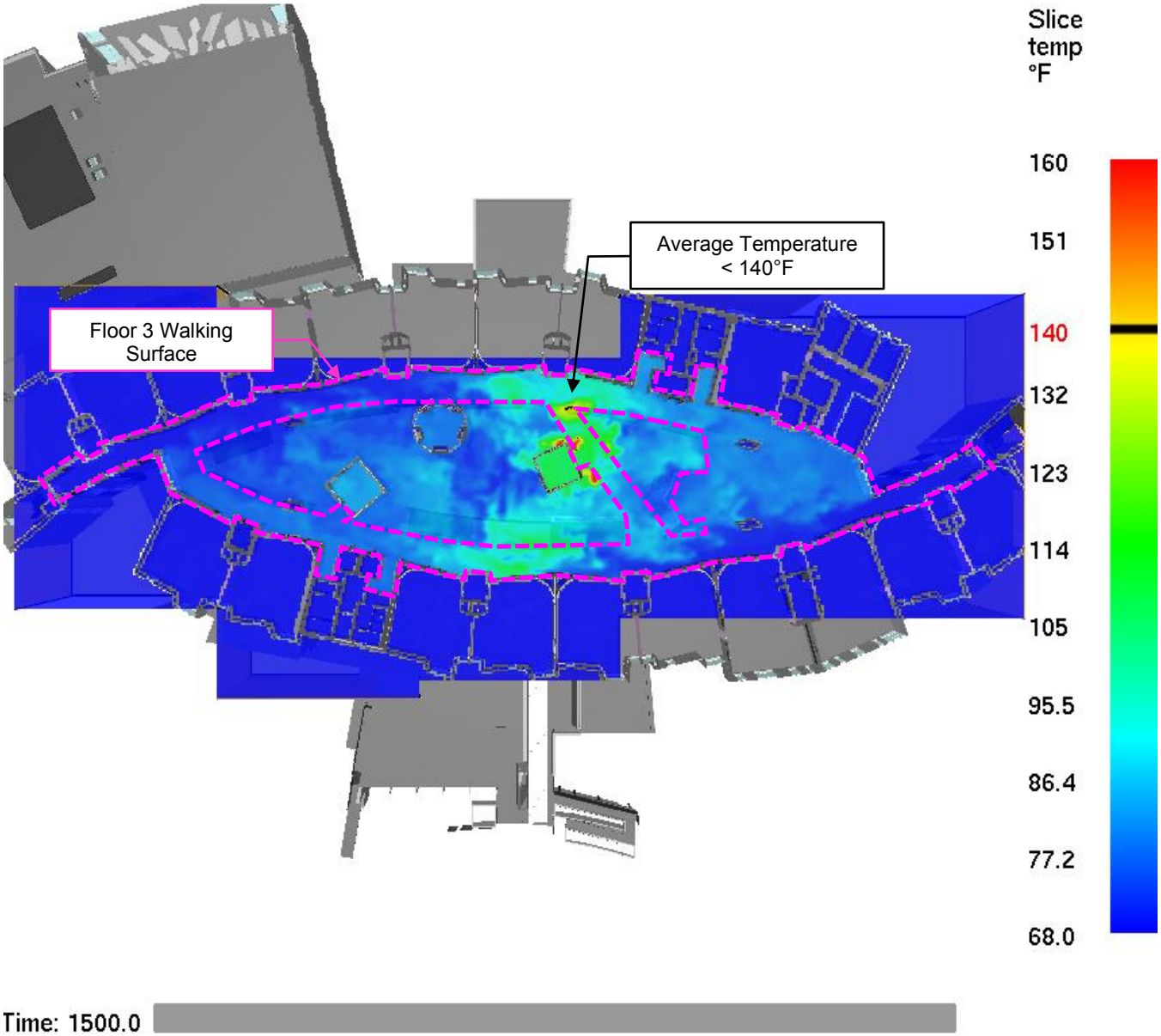

Figure 26: Scenario 2 – Temperature 6 ft. above Floor 3 Walking Surface

SCENARIO 2 VISIBILITY RESULTS

Lastly, visibility conditions were analyzed and recorded within the FDS model throughout the atrium for the duration of the design fire to determine where the worst-case conditions occur. As shown in the screen shots captured below, visibility levels were maintained above the 10-meter tenability threshold in the large atrium spaces over the majority of the means of egress system walking surface. There were small pockets of reduced visibility along the walking surface directly above the fire. This area is intimate with the fire plume and for that reason is acceptable. The visibility levels calculated in the model are sufficient to see all walls and exit signs along the means of egress and is therefore considered acceptable conditions.

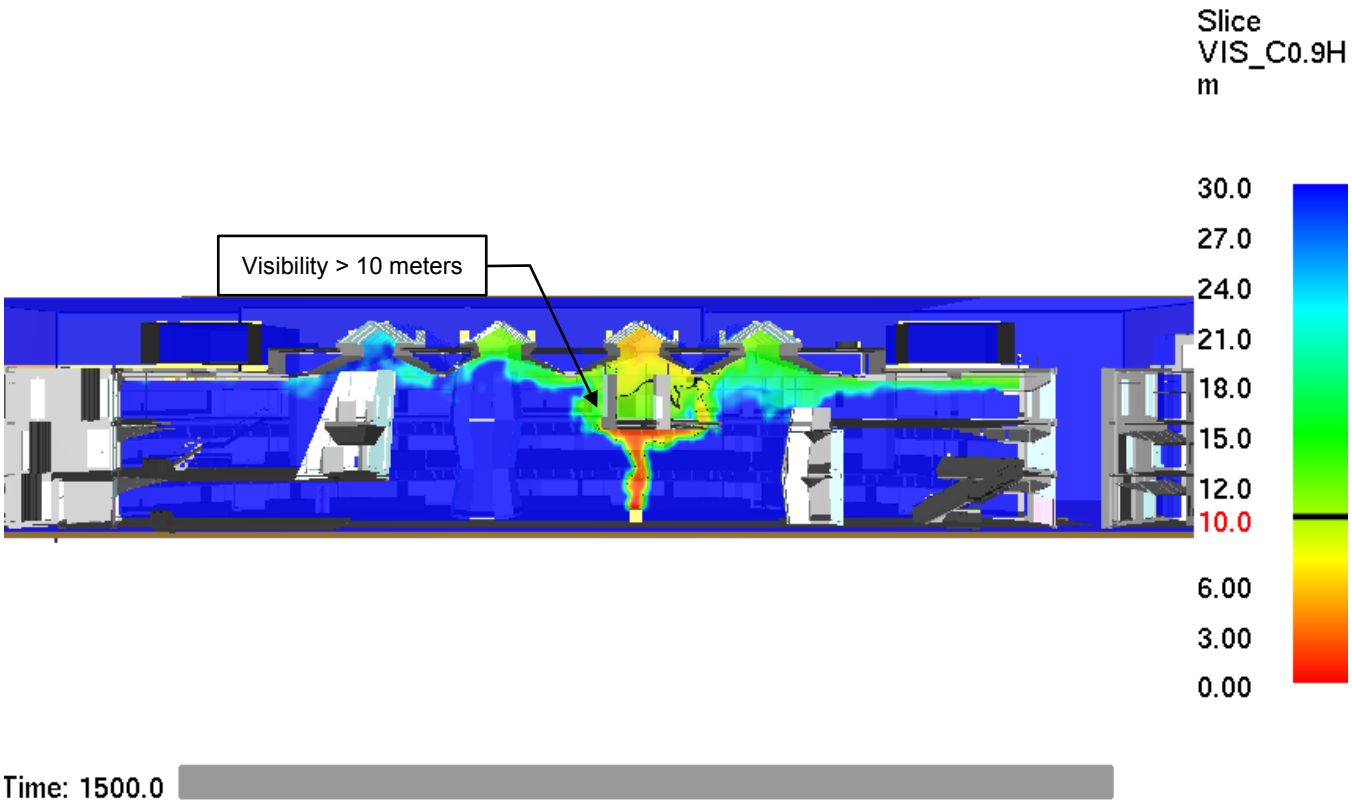

Figure 27: Scenario 2 – Section View through Fire of Visibility

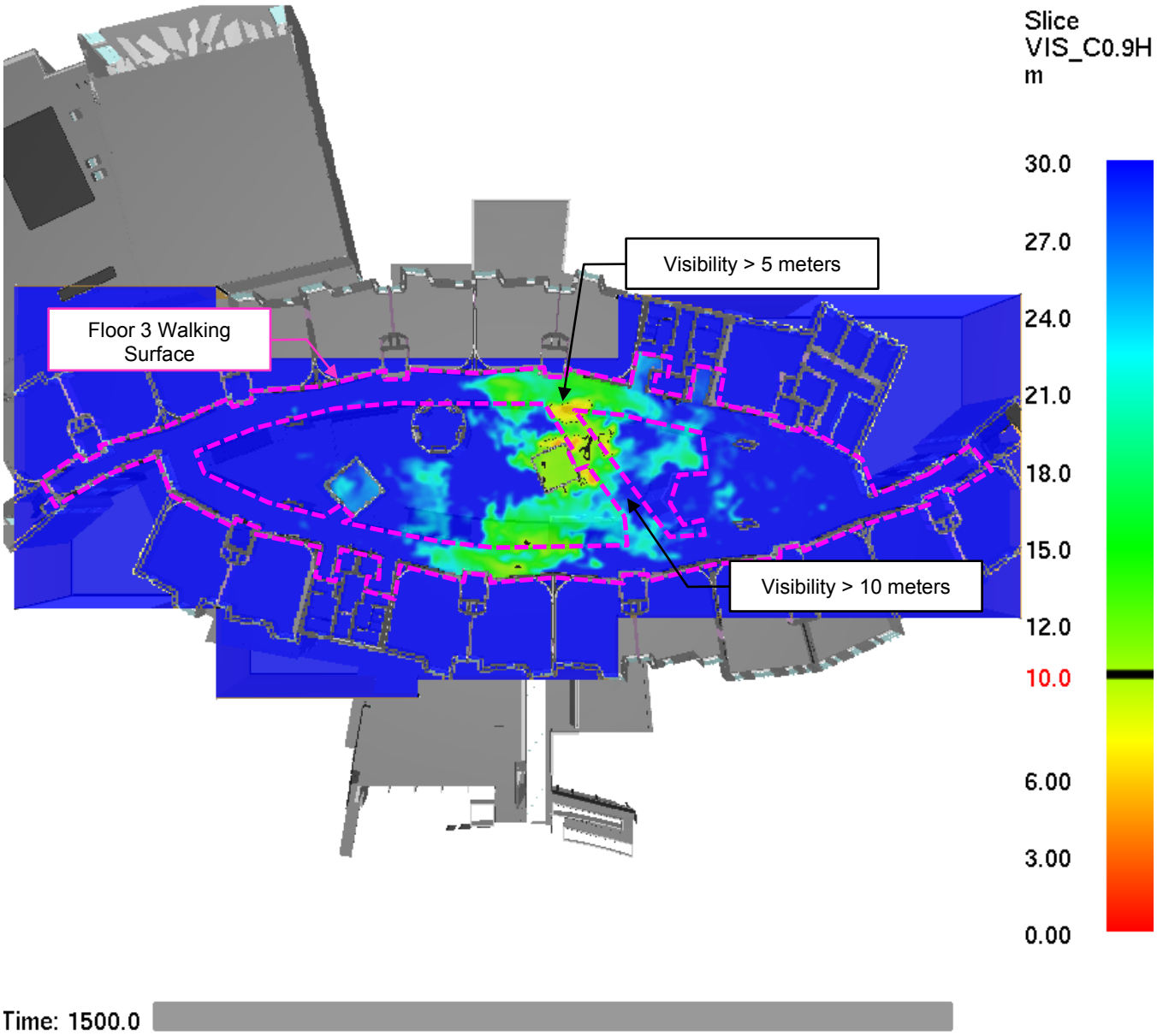

Figure 28: Scenario 2 – Visibility 6 ft. above Floor 3 Walking Surface

Scenario 3 – 2,100 kW Balcony-Spill (Beneath Level 3 Walking Surface) Fire Results

Scenario 3 consists of a balcony-spill plume 2,100 kW fire located beneath the Level 3 walking surface. The fire size is based on conservative assumptions and fire test data. The fire is allowed to grow to full size before sprinklers activate and control the fire, allowing it to remain at steady state. Such a scenario presents a very conservative assumption as such fires will decay once the fuel is burned up.

As required by the MSBC, the mechanical exhaust smoke control system must be designed and capable of maintaining tenable conditions 6 feet above the highest walking surface for a minimum of 20 minutes after fire detection or 1.5 times the calculated egress time, whichever is greater. The means of detection in Scenario 3 consists of beam detection located across the ceiling of the atrium. Beam detectors are spaced a maximum of 30-feet apart, and the model assumes an obscuration of 20%, such a setpoint is typical for beam obscuration detection. The use of this detection configuration does not preclude other means of detection such as an air sampling system, or spot-type smoke detection located along underside of the ceiling/roof, as such configurations would provide equivalent levels of detection modeled herein. As a result of such a modeled configuration, detection is noted to occur within 76 seconds. Therefore, tenability criteria for Scenario 3 is analyzed for a minimum of 1,276 seconds of simulation time, as this is greater than 1.5 times the calculated egress time (refer to Appendix C for additional information). The following subsections outlines the tenability results recorded for the duration of the scenario.

SCENARIO 3 SMOKE TOXICITY RESULTS

As discussed in the Design Assumptions section, carbon monoxide concentration levels were analyzed for the duration of the design fire. From the results, it is possible to determine the worst-case carbon monoxide (CO) concentration levels and where they occur within the occupied portions of the building. As the design fire progressed, concentration levels of CO six (6) feet above each occupied level were recorded with a maximum concentration level of less than 55.7 parts per million (PPM). See screen shots of the model below for illustrative results.

Using a maximum CO concentration of 55.7 PPM, the maximum exposure time before a human becomes incapacitated can be calculated. As discussed above, it is assumed a person may become incapacitated at COHb levels greater than 25-percent within the bloodstream. Using the calculations below, a person would need to be exposed to such conditions within the spaces for over 7.8 hours (468 minutes) during the design fire before they would become incapacitated from the effects of CO. This carbon monoxide concentration would provide occupants with more than enough time to evacuate the building and is considered acceptable conditions.

$$\%COH_b = (3.317 \times 10^{-5})(ppmCO)^{1.036}(RMV)(t)$$

$$(t) = \frac{\%COH_b}{(3.317 \times 10^{-5})(ppmCO)^{1.036}(RMV)}$$

$$(t) = \frac{25\%}{(3.317 \times 10^{-5})(55.7)^{1.036}(25)} = 468\,min$$

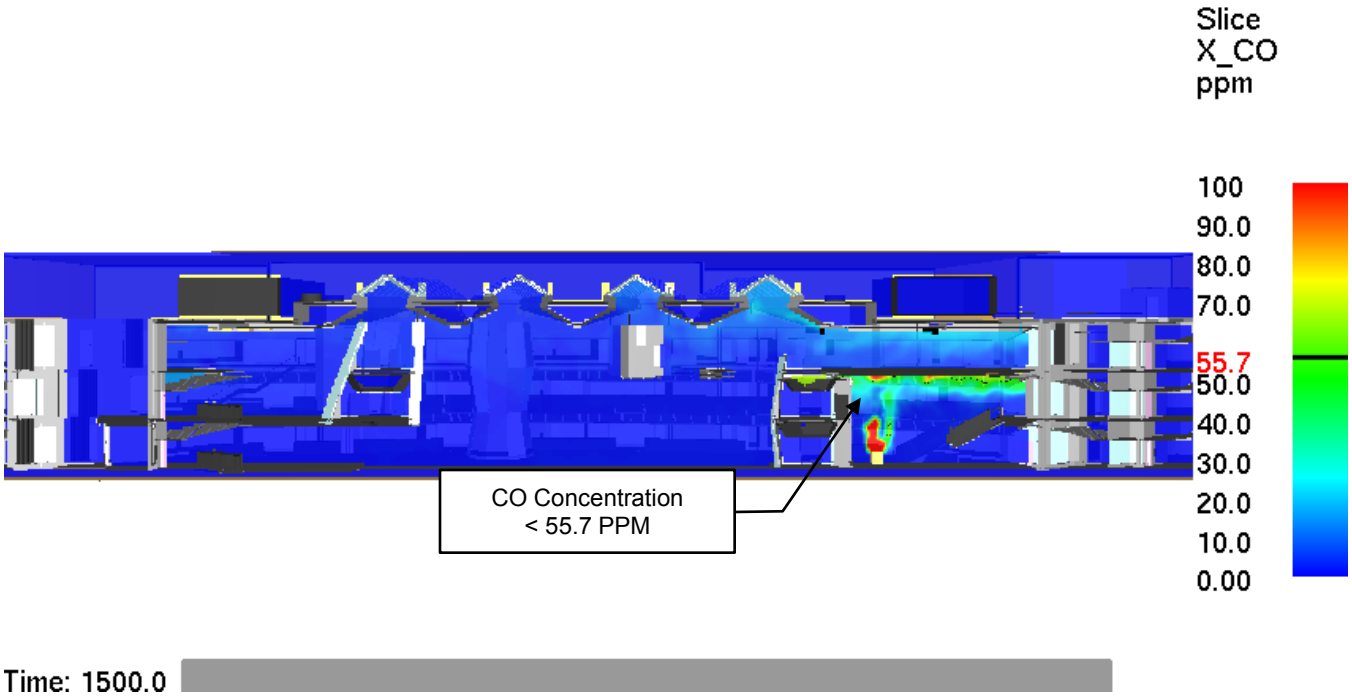

Figure 29: Scenario 3 – Section View through Fire of CO Concentration

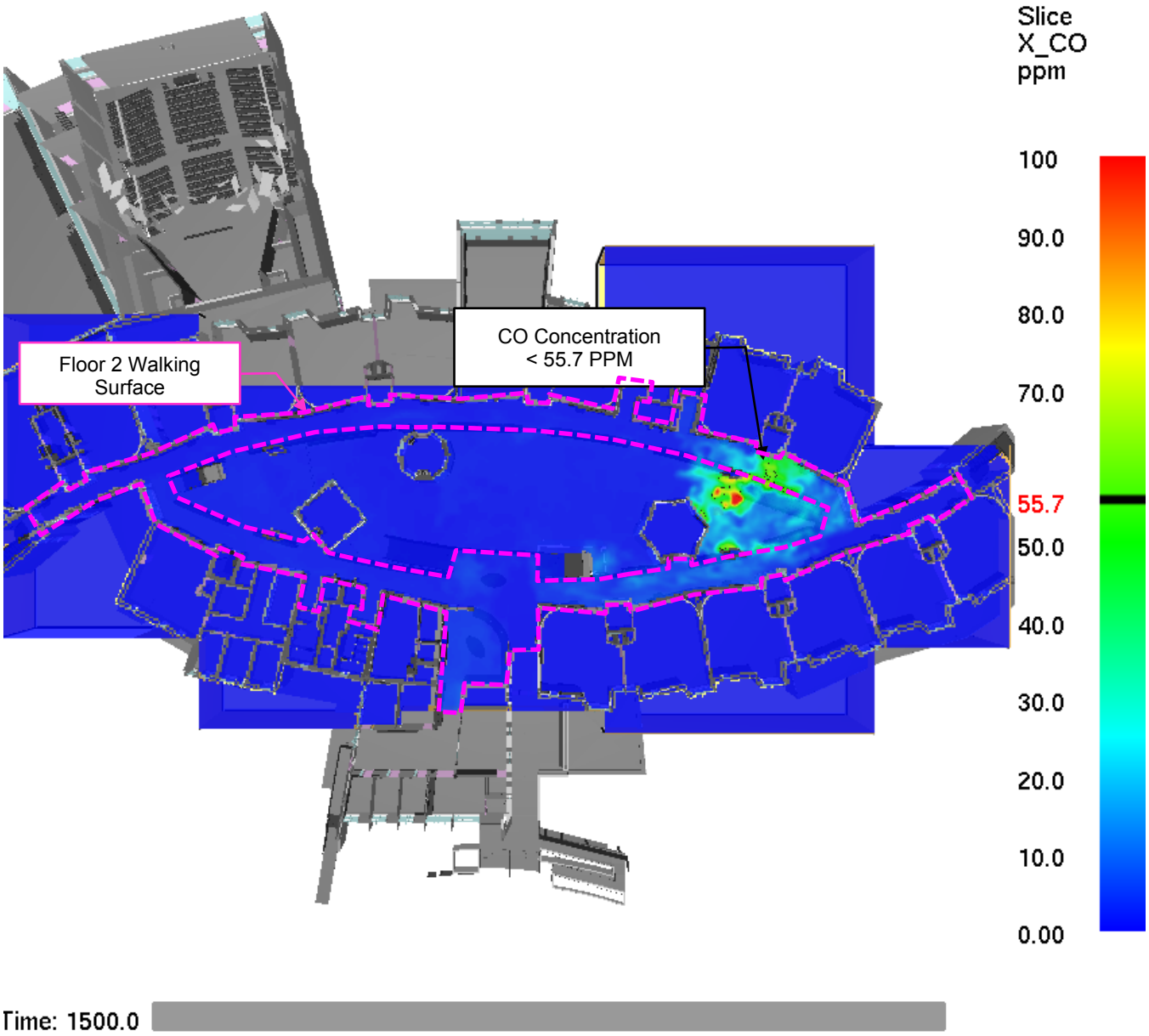

Figure 30: Scenario 3 – CO concentration 6 ft. above Floor 2 **Walking Surface**

SCENARIO 3 HEAT EXPOSURE RESULTS

The second product of combustion analyzed within the FDS model was temperature. Beginning with an ambient temperature of 68°F, temperature levels were recorded throughout the atrium for the duration of the design fire to determine where the worst-case conditions occur.

As shown in the screen shot captured below, similar to the carbon monoxide concentration, the highest temperature levels occur along the Floor 2 walking surface underneath the Cohort Space. This can be expected because hot air is buoyant and will rise to the ceiling and descend towards the walking surfaces nearby the fire plume. As the design fire progressed, temperature levels continued to increase 6 feet above the walking surface with portions exceeding the maximum temperature level of 140°F. This occurs along the walking surface within the conical fire plume, in addition these elevated temperatures were intermittent. Occupants are capable of utilizing another exit without egressing through the fire plume. Since occupants are provided with other exits, and the average temperature in the atrium is below the 140°F threshold for human tolerance, and the portion exceeding 140°F was intermittent and intimate with the fire plume, the temperature levels are considered acceptable.

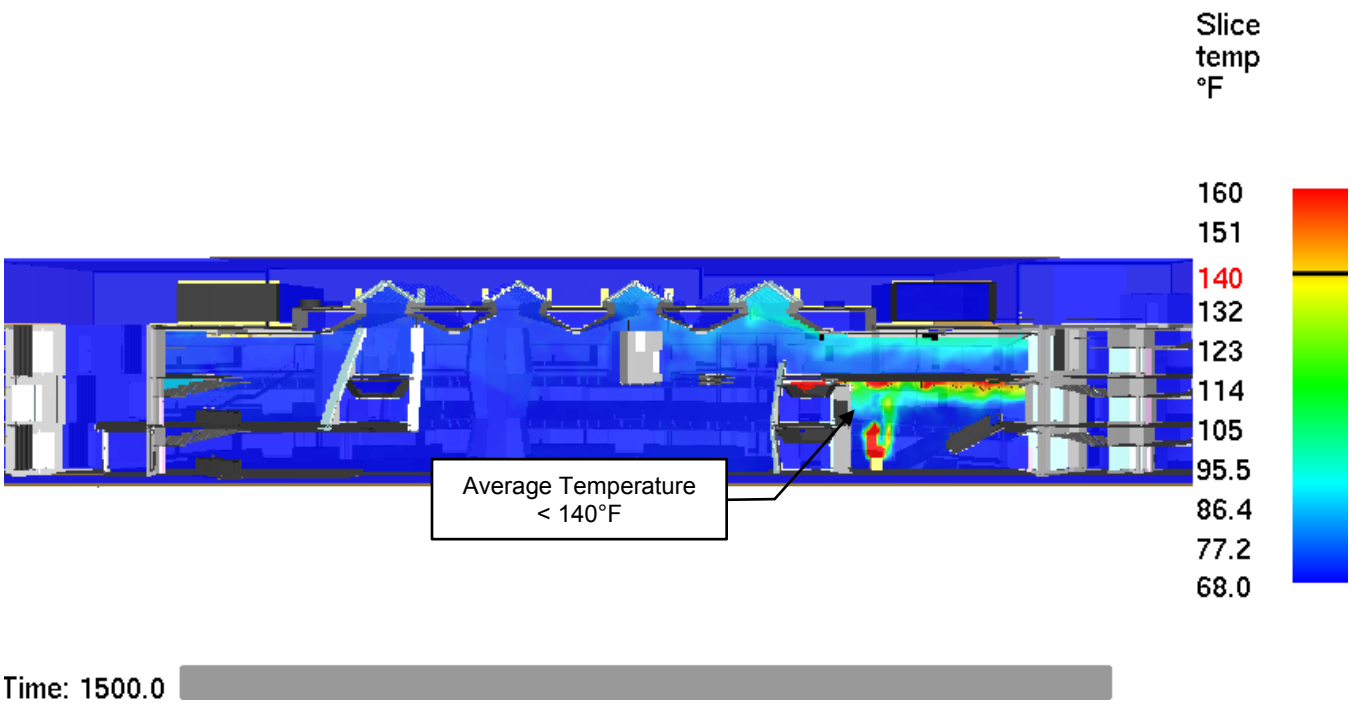

Figure 31: Scenario 3 – Section View through Fire of Temperature

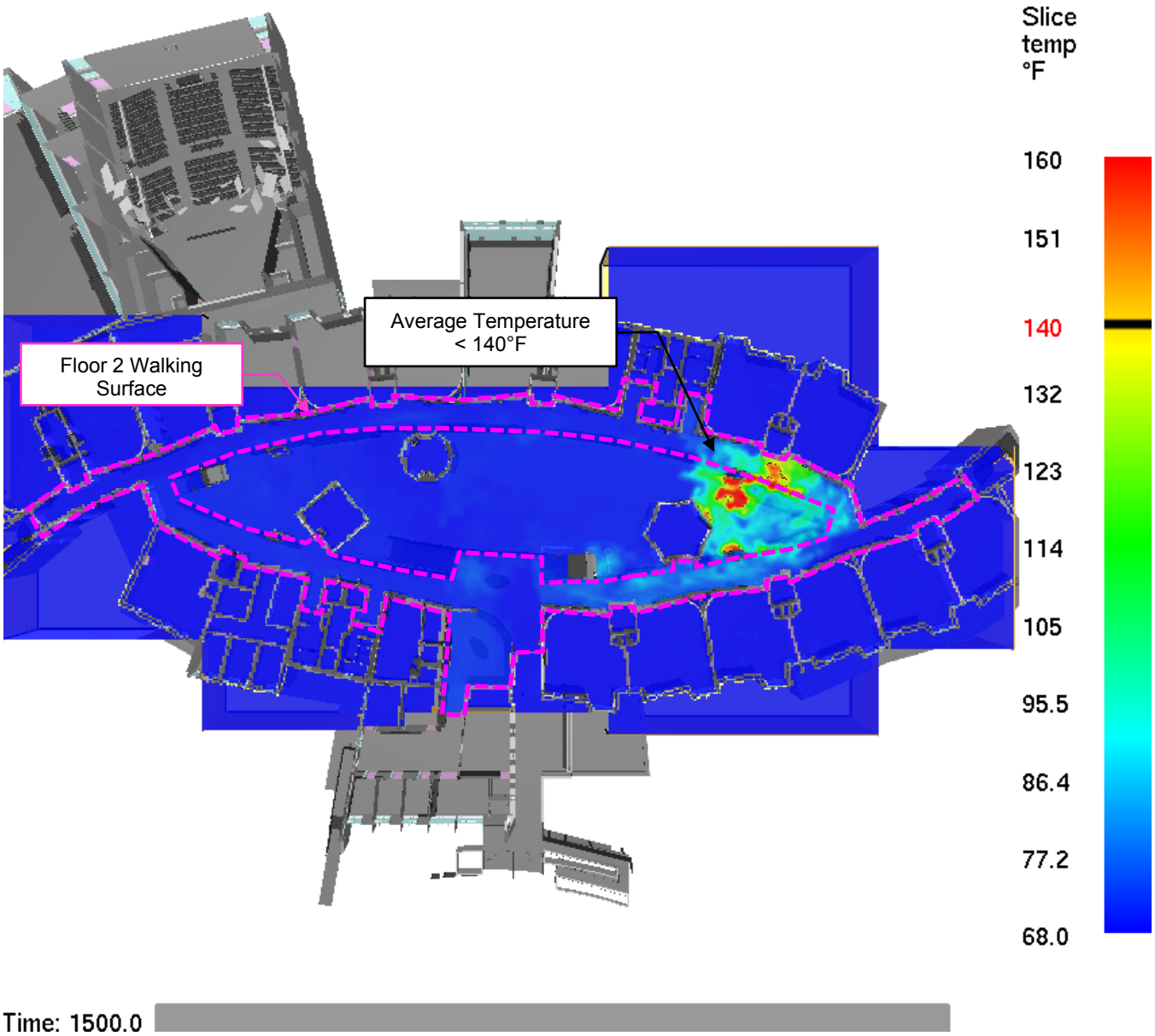

Figure 32: Scenario 3 – Temperature 6 ft. above Floor 2 Walking Surface

SCENARIO 3 VISIBILITY RESULTS

Lastly, visibility conditions were analyzed and recorded within the FDS model throughout the atrium for the duration of the design fire to determine where the worst-case conditions occur. As shown in the screen shots captured below, visibility levels were maintained above the 10-meter tenability threshold over the majority of the means of egress system walking surface. There were small intermittent pockets of reduced visibility, although they were of short duration (less than 60 seconds) and intimate with the conical fire plume and for that reason are acceptable. The visibility levels calculated in the model are sufficient to see all walls and exit signs along the means of egress and is therefore considered acceptable conditions.

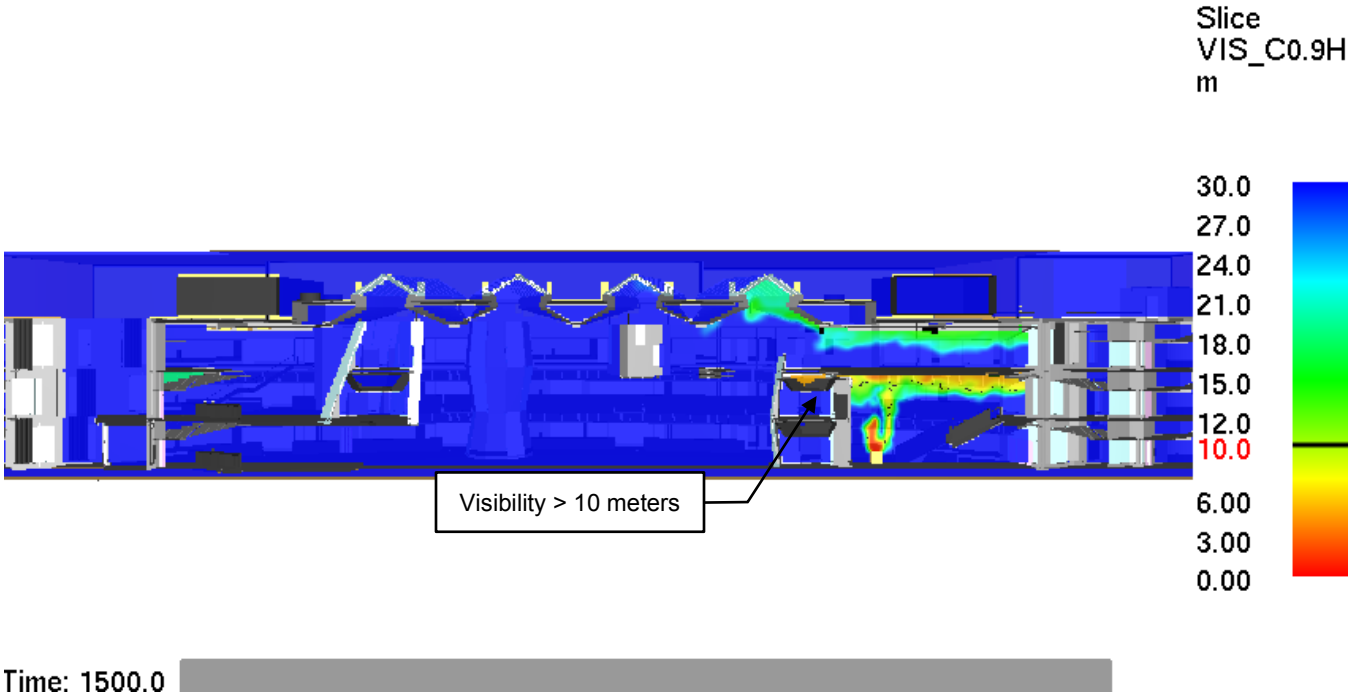

Figure 33: Scenario 3 – Section View through Fire of Visibility

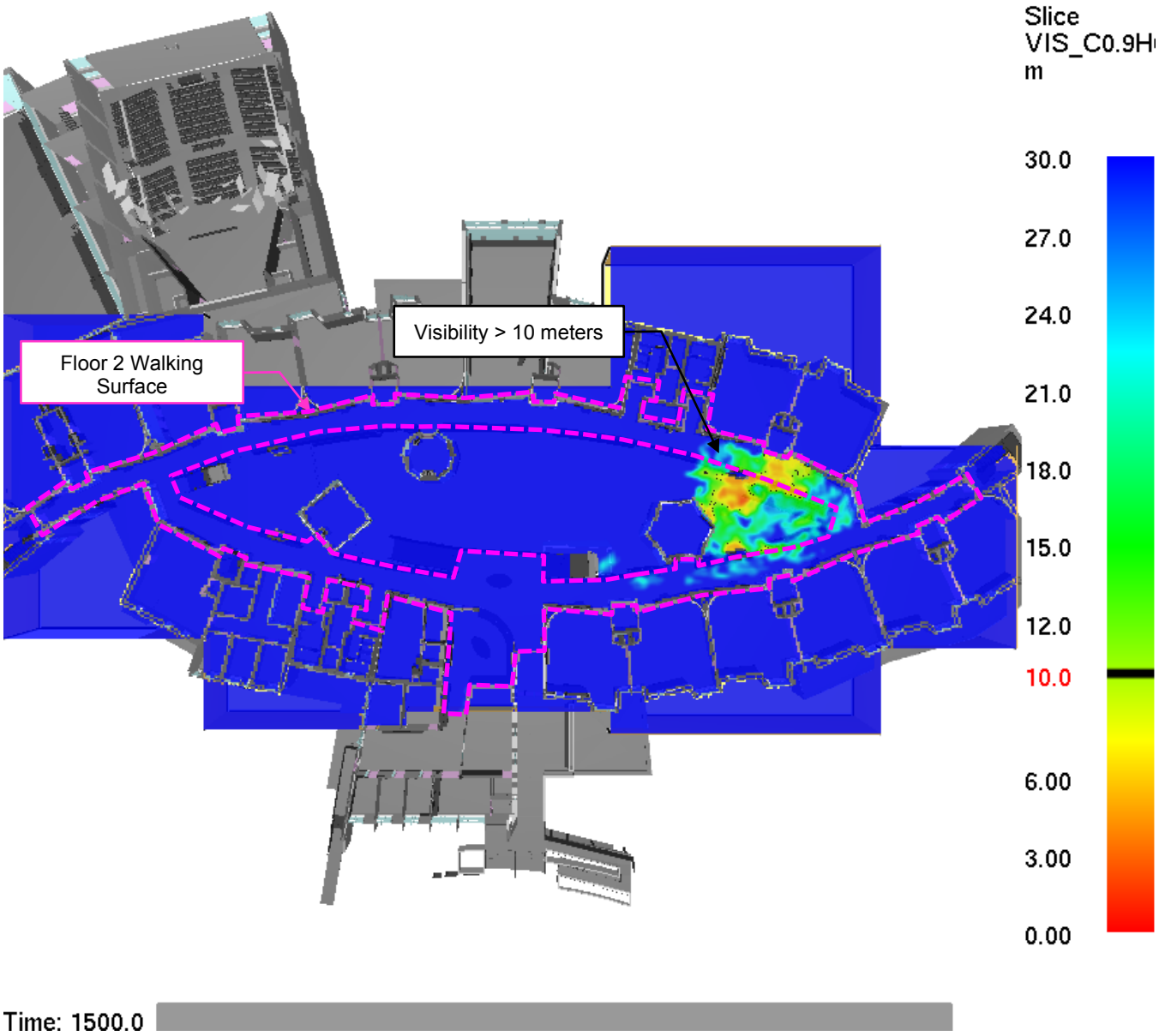

Figure 34: Scenario 3 – Visibility 6 ft. above Floor 2 Walking Surface

Scenario 4 – 1,100 kW Balcony-Spill (Beneath Level 2 Walking Surface) Fire Results

Scenario 4 consists of a balcony-spill plume 1,100 kW fire located beneath the Level 2 walking surface adjacent to the mechanical makeup air, automatic opening doors, and louvers (this location is subject to the highest makeup air velocities). The fire size is based on conservative assumptions and fire test data. The fire is allowed to grow to full size before sprinklers activate and control the fire, allowing it to remain at steady state. Such a scenario presents a very conservative assumption as such fires will decay once the fuel is burned up.

As required by the MSBC, the mechanical exhaust smoke control system must be designed and capable of maintaining tenable conditions 6 feet above the highest walking surface for a minimum of 20 minutes after fire detection or 1.5 times the calculated egress time, whichever is greater. The means of detection in Scenario 4 consists of beam detection located across the ceiling of the atrium. Beam detectors are spaced a maximum of 30-feet apart, and the model assumes an obscuration of 20%, such a setpoint is typical for beam obscuration detection. The use of this detection configuration does not preclude other means of detection such as an air sampling system, or spot-type smoke detection located along underside of the ceiling/roof, as such configurations would provide equivalent levels of detection modeled herein. As a result of such a modeled configuration, detection is noted to occur within 103 seconds. Therefore, tenability criteria for Scenario 4 is analyzed for a minimum of 1,303 seconds of simulation time, as this is greater than 1.5 times the calculated egress time (refer to Appendix C for additional information). The following subsections outlines the tenability results recorded for the duration of the scenario.

SCENARIO 4 SMOKE TOXICITY RESULTS

As discussed in the Design Assumptions section, carbon monoxide concentration levels were analyzed for the duration of the design fire. From the results, it is possible to determine the worst-case carbon monoxide (CO) concentration levels and where they occur within the occupied portions of the building. As the design fire progressed, concentration levels of CO six (6) feet above each occupied level were recorded with a maximum concentration level of less than 13.7 parts per million (PPM). See screen shots of the model below for illustrative results.

Using a maximum CO concentration of 13.7 PPM, the maximum exposure time before a human becomes incapacitated can be calculated. As discussed above, it is assumed a person may become incapacitated at COHb levels greater than 25-percent within the bloodstream. Using the calculations below, a person would need to be exposed to such conditions within the spaces for over 33.3 hours (2,002 minutes) during the design fire before they would become incapacitated from the effects of CO. This carbon monoxide concentration would provide occupants with more than enough time to evacuate the building and is considered acceptable conditions.

$$\%COH_b = (3.317 \times 10^{-5})(ppmCO)^{1.036}(RMV)(t)$$

$$(t) = \frac{\%COH_b}{(3.317 \times 10^{-5})(ppmCO)^{1.036}(RMV)}$$

$$(t) = \frac{25\%}{(3.317 \times 10^{-5})(13.7)^{1.036}(25)} = 2{,}002\ min$$

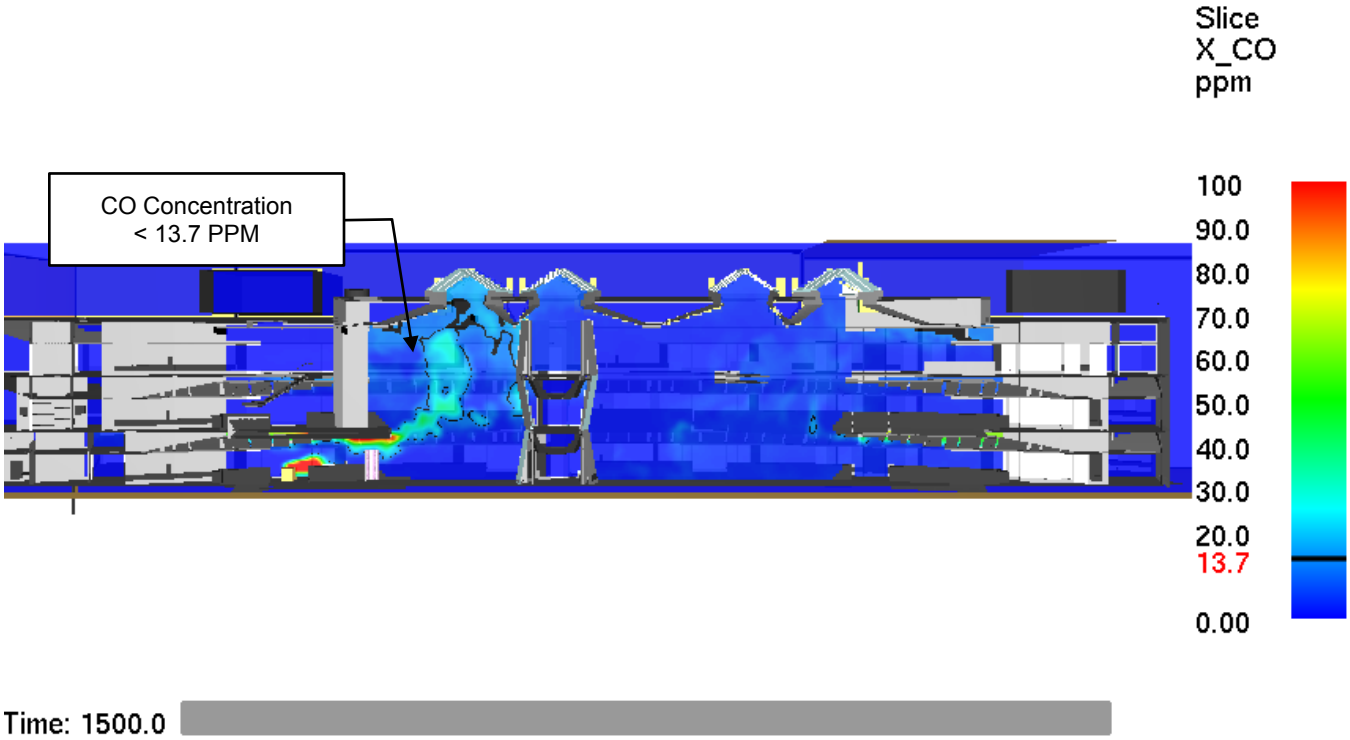

Figure 35: Scenario 4 – Section View through Fire of CO Concentration

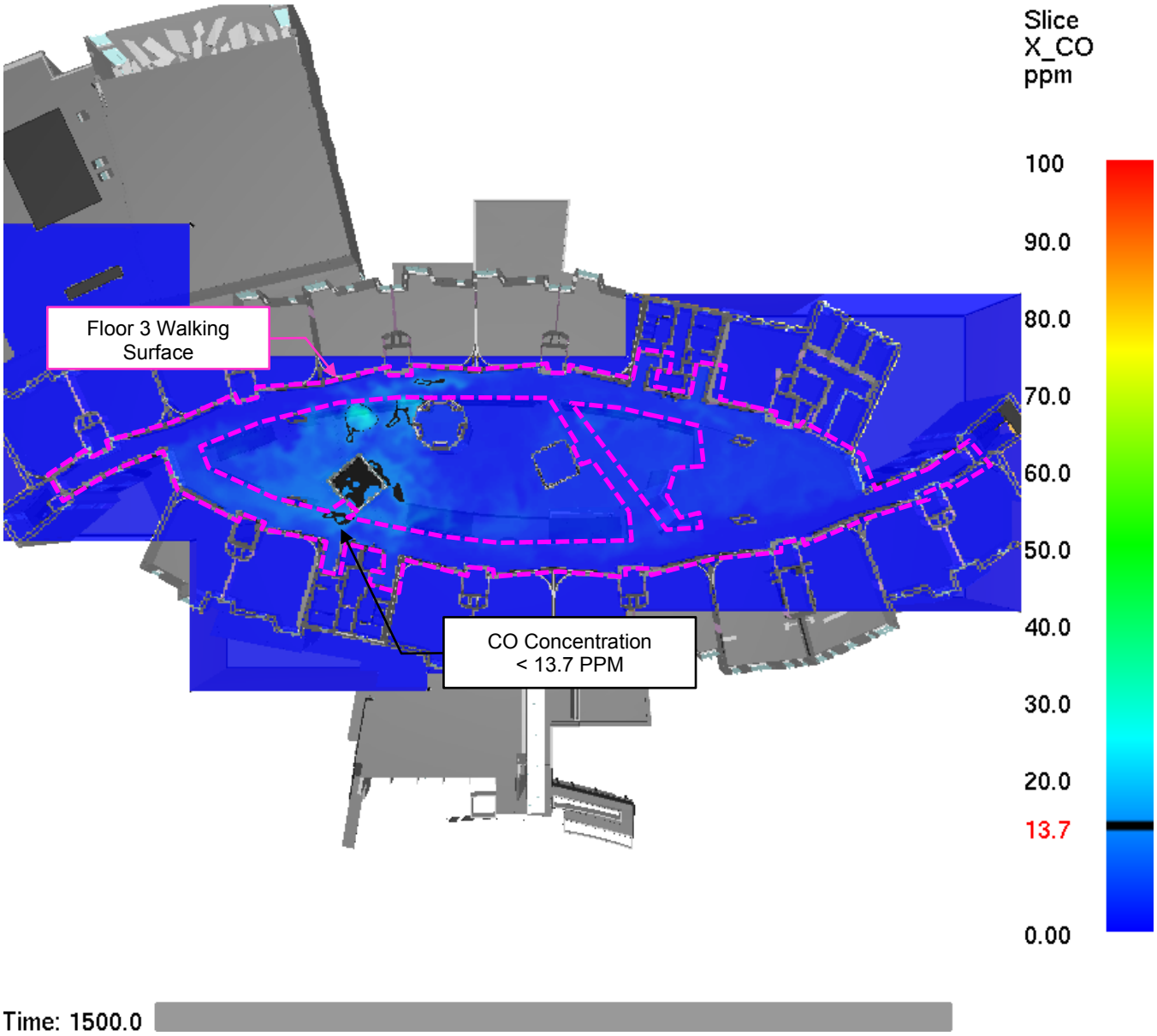

Figure 36: Scenario 4 – CO concentration 6 ft. above Floor 3 Walking Surface

SCENARIO 4 HEAT EXPOSURE RESULTS

The second product of combustion analyzed within the FDS model was temperature. Beginning with an ambient temperature of 68°F, temperature levels were recorded throughout the atrium for the duration of the design fire to determine where the worst-case conditions occur.

As shown in the screen shot captured below, similar to the carbon monoxide concentration, the highest temperature levels outside of the fire plume occur at the highest levels of the atrium within the smoke filling space. This can be expected because hot air is buoyant and will rise to the ceiling. As the design fire progressed, temperature levels continued to increase with a maximum temperature of less than 140°F occurring 6 feet above highest walking surface. Since this temperature does not exceed the 140°F threshold for human tolerance and is considered acceptable conditions.

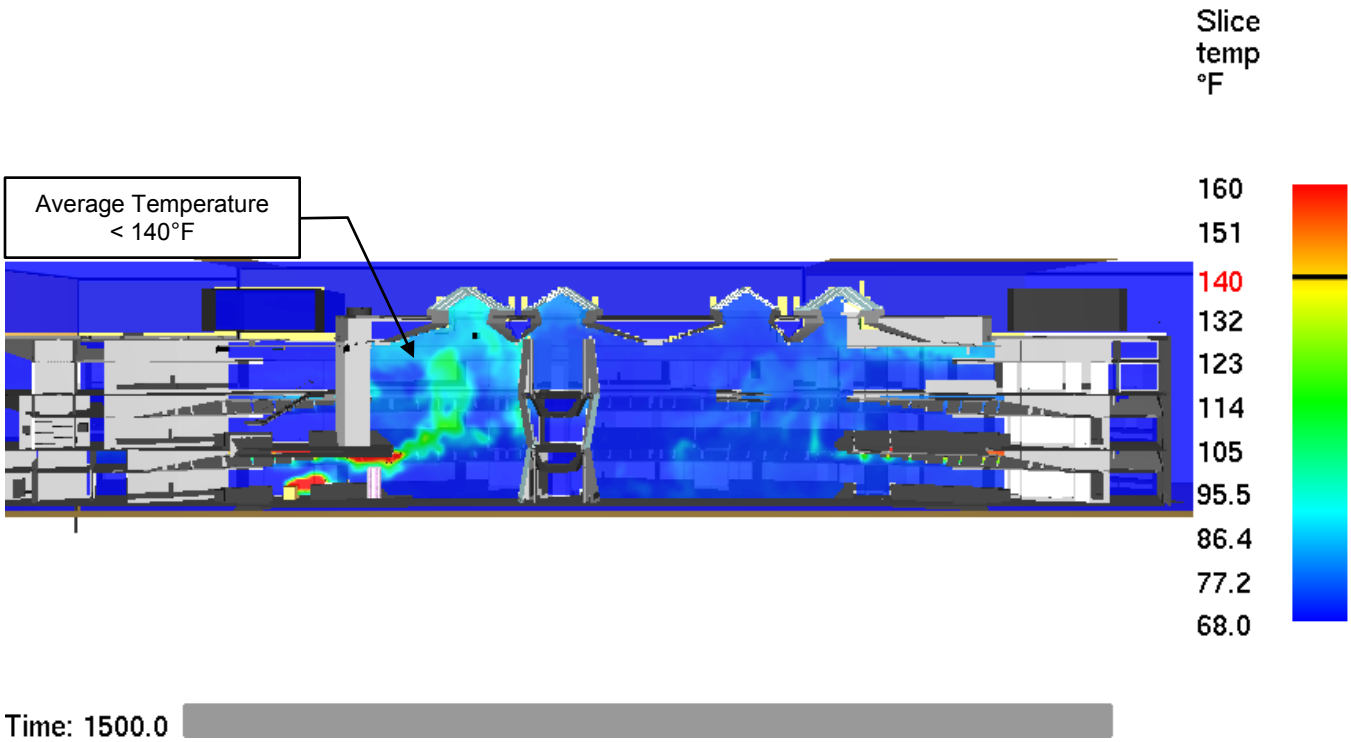

Figure 37: Scenario 4 – Section View through Fire of Temperature

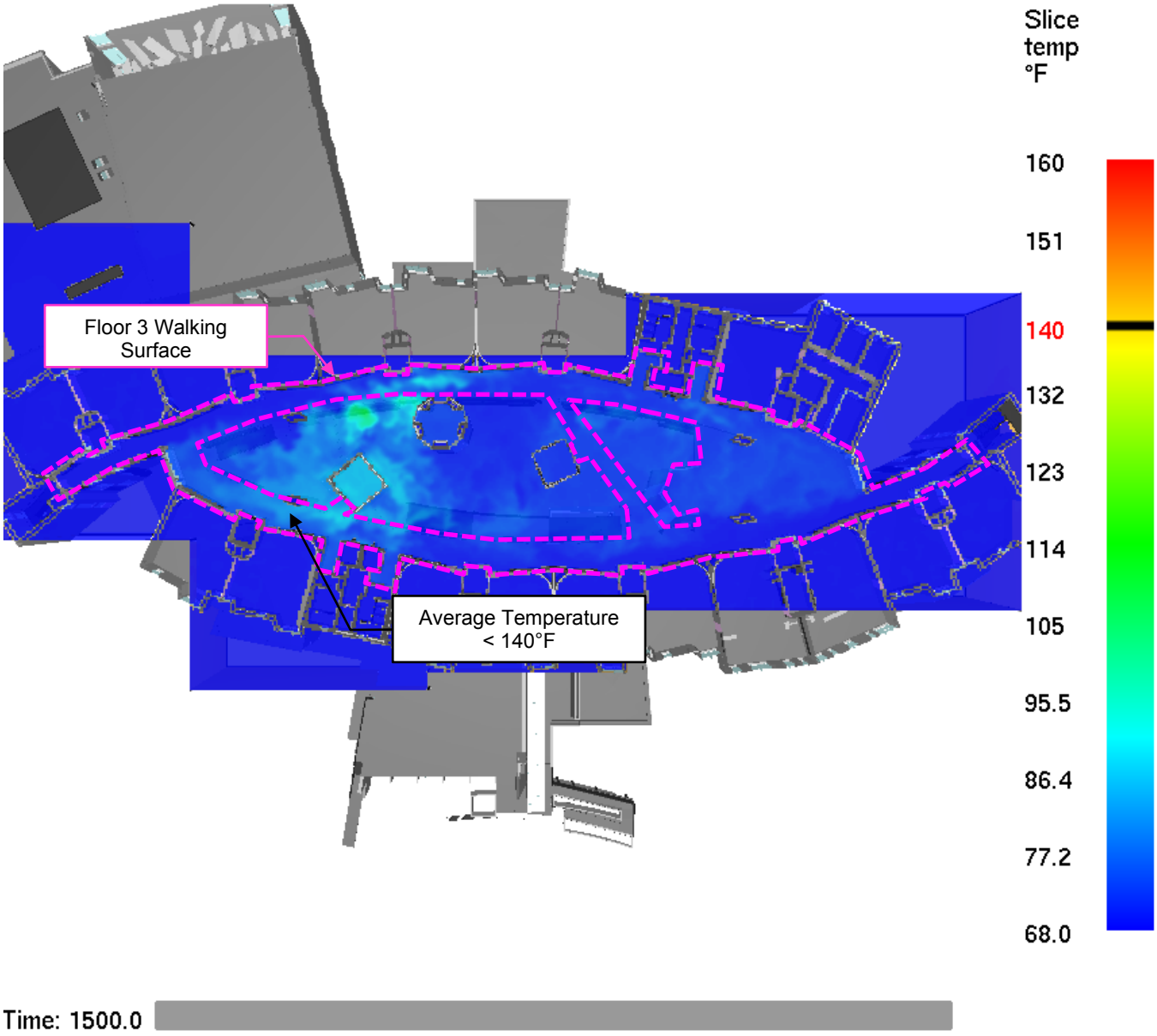

Figure 38: Scenario 4 – Temperature 6 ft. above Floor 3 Walking Surface

SCENARIO 4 VISIBILITY RESULTS

Lastly, visibility conditions were analyzed and recorded within the FDS model throughout the atrium for the duration of the design fire to determine where the worst-case conditions occur. As shown in the screen shots captured below, visibility levels were maintained above the 10-meter tenability threshold outside of the fire plume in the large atrium spaces over the entirety of the means of egress system walking surface. The visibility levels calculated in the model are sufficient to see all walls and exit signs along the means of egress and is therefore considered acceptable conditions.

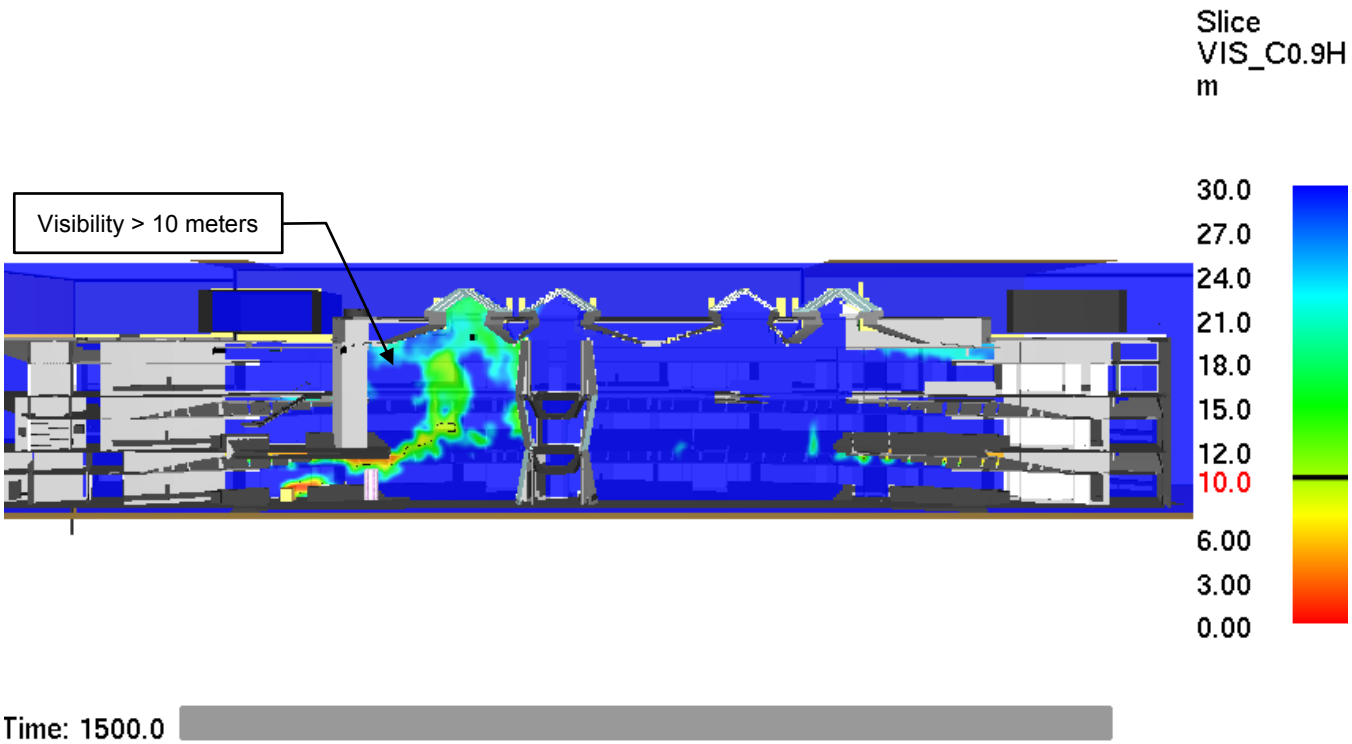

Figure 39: Scenario 4 – Section View through Fire of Visibility

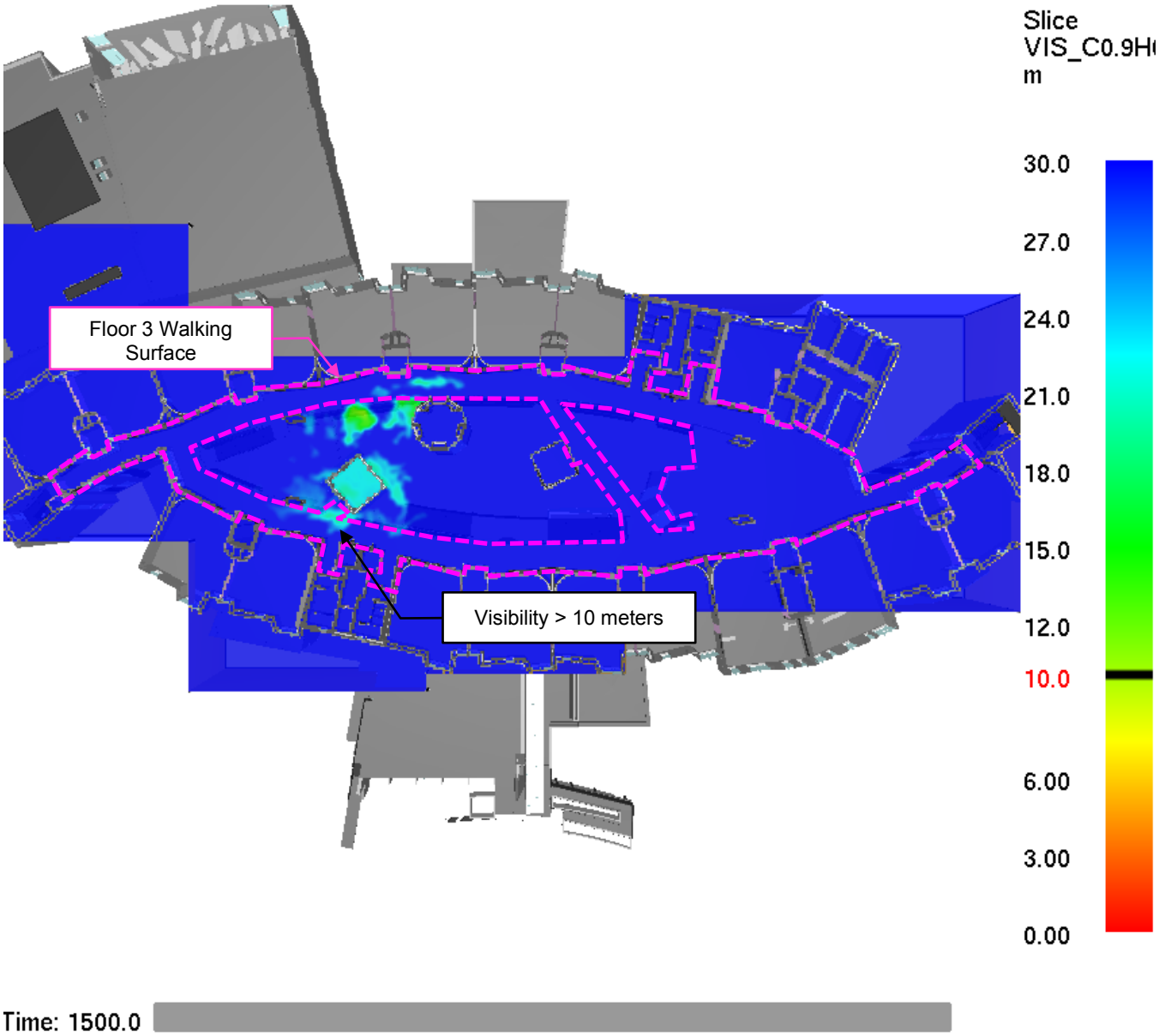

Figure 40: Scenario 4 – Visibility 6 ft. above Floor 3 Walking Surface

Summary of Results

This report analyzes the tenability environment for a proposed passive smoke control system for the atrium in the Framingham Fuller Middle School in Framingham, MA. The analysis evaluates a means of egress system, under specific fire scenarios, for three (3) major products of combustion during a fire scenario; heat exposure (temperature), smoke toxicity, and visibility. The FDS computer model developed by NIST was used to evaluate each of the tenability criteria. The CFD Model analysis validated the following smoke control systems design criteria.

- **Exhaust Configuration**
  - 240,000 CFM of mechanically driven exhaust air
    - Exhaust air is provided via multiple points (refer to Figure 1 and Figure 2).

- **Supply Configuration**
  - Floor 1 (refer to Figure 3):
    - Automatic Openings
      - Two (2) louvers providing a minimum of 63 ft^2 of free area each
  - Floor 2 (refer to Figure 4):
    - Automatic Doors / Openings
      - Three (3) exterior single-leaf doors and three (3) interior single-leaf doors providing a minimum of 66 ft^2 of free area
      - Two (2) louvers providing a minimum of 63 ft^2 of free area each
  - Floor 3 (refer to Figure 5):
    - Automatic Openings
      - Two (2) louvers providing a minimum of 63 ft^2 of free area each

Using the maximum carbon monoxide concentration found in all fire scenarios the maximum exposure time before a human becomes incapacitated can be calculated. The calculated exposure time as a result of the maximum CO concentrations was determined to be 7.8 hours (468 min), before a person would become incapacitated from the effects of CO. This concentration would provide occupants with more than enough time to evacuate the building and are considered acceptable conditions.

Heat exposure was analyzed with a maximum recorded average temperature along the means of egress system within the Atrium Zone not exceeded 140°F and is not considered hazardous to humans. Therefore, the design objective is achieved because every occupant is expected to be capable of evacuating the without being overcome by the harmful effects of heat exposure.

Visibility conditions were analyzed and found to be capable of maintaining the minimum visibility thresholds for the time duration necessary to safely evacuate occupants. As indicated in the results, the visibility threshold was maintained for a minimum of 20 minutes after detection of the fire. Therefore, the design objective is achieved because every occupant is expected to be capable of evacuating the building without experiencing low visibility conditions.

Although this analysis determined the atrium will maintain a tenable environment for the referenced design fires, several critical factors were overestimated and some not considered in this analysis, which contributed to providing a conservative analysis. These factors include:

- Sustained peak heat release rate for the duration of the model (Scenarios 1, 2, 3, and 4).
- Occupants are provided with multiple exits from the building,
- Overestimation of heat release rates based on the available fuel load,
- Delayed fire department and staff response/action (no manual suppression).

ADDITIONAL INTERNATIONAL BUILDING CODE SECTION 909 RATIONALE

HVAC Systems

Normal building HVAC systems, not associated with the smoke control system zone are designed to shut down when an automatic smoke detector, or sprinkler waterflow switch within the Atrium Zone is activated.

Separation Distance

Separation distances are required to be maintained between multiple fuel packages to reduce the possibility of adjacent fuel packages igniting during a fire, which may result in a fire larger than contemplated in the design. Separation distance requirements can be calculated using the equation below from MSBC Section 909.9.2.

$$R = \left(\frac{Q}{12\pi q''}\right)^{1/2}$$

Where:

R = Separation distance from target to center of fuel package (m)
Q = Heat release rate from fire (kW)
q" = Incident radiant heat flux required for non-piloted ignition (kW/m^2)

For the purposes of this analysis, an incident radiant heat flux of 10kW/m^2 was used, which is the heat flux required to ignite wood and the most commonly used combustible material within the atrium; and a fire size of 3,500 kW was used. The separation distances can then be calculated as follows:

$$R = \left(\frac{3{,}500}{12 \times \pi \times 10}\right)^{1/2}$$

3.05 meters (approximately 10'0")

As shown in the calculation above the separation between fuel packages within the atrium consisting of heat release rate of 3,500 kW shall be no less than 10'0".

Stack Effect

Stack effect is inherently calculated within the CFD models. The results indicate that the smoke will overcome the effects of stack effect and reverse stack effect during a fire event.

Buoyancy

Buoyancy is inherently calculated within the CFD models. The results indicate that the smoke will overcome the height of the space.

Stratification Analysis

Stratification is inherently calculated within the CFD models. The results indicate that the smoke will overcome the effects of stratification during a fire event.

Climate

Since the makeup air system relies on selected exterior openings to provide air into the Atrium Zone, it is imperative that the owner maintain the required exterior areas free from any impediments that would cause the doors/louvers not to open in an emergency. Specifically, the owner must maintain the surfaces outside all doors free from blockage anytime that the building is occupied so that the doors/louvers are capable of opening in smoke mode.

Smoke Control Equipment Temperature

MSBC Section 909.10 requires smoke control equipment including, but not limited to, fans, ducts, automatic dampers, and balancing dampers be suitable for its intended use under probable exposure temperatures. All exhaust fans must be UL 705 listed. Upper Hot Gas Layer Temperatures were analyzed within the FDS model. Beginning with an ambient temperature of 68°F, temperature levels were recorded throughout the Building for the duration of the design fire to determine where the worst-case conditions occur. Temperatures within the analyzed model(s) reached stead-state conditions, with maximum temperatures along the ceiling level calculated to be approximately 452°F. Refer to Figure 42 for a section view throughout the building.

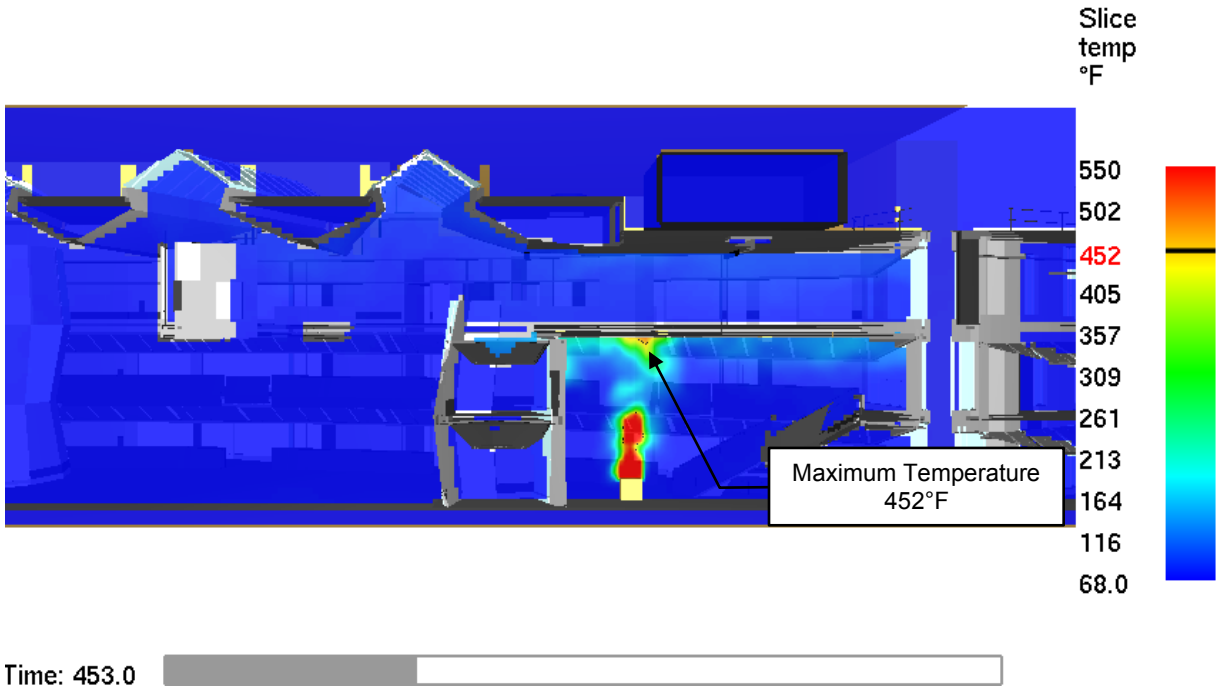

Figure 41: Scenario 3 – Section View through Fire of Temperature

EQUIPMENT AND CONTROLS

Details of specific equipment, control sequences of actual equipment, fire alarm annunciation points, and HVAC operation as it relates to the smoke control system are found in the following sections of this report. All equipment shall conform to the requirements of the MSBC, NFPA 92, and UL 864.

The mechanical exhaust smoke control system will be activated automatically by appropriately zoned sprinkler systems within the Atrium Zone, smoke detection (i.e. via spot-type, beam obscuration or air-sampling system) located along the underside of the atrium skylights, or manually via the firefighter's smoke control panel. Upon activation of the fire alarm system within the appropriate zone, the smoke exhaust system shall be activated in accordance with the integrated operation matrix to be prepared by the Engineer of Record. The zone that will activate the smoke control system will be coordinated with the proposed Atrium Zone boundary as depicted in Appendix B.

SECONDARY POWER

Secondary power must be provided and connected to all equipment associated with the smoke control system, which includes smoke control exhaust, automatic opening doors/louvers that are not fail-open used for makeup air, dampers, and any monitoring systems.

1. The emergency generator must be sized accommodate the demand of the smoke control system and equipment, automatic doors and dampers associated with makeup air, control panels, and controls for the smoke control sequence.
2. Transfer to full standby power must be automatic and occur within 60 seconds of failure of the primary power.

EQUIPMENT

The following requirements relate to the smoke control equipment installed for exhaust or makeup air systems within the atrium.

1. Smoke-Control System Fans
   a. Smoke control fans are to be UL 864 listed.
   b. 1.5 times required number of belts (minimum 2) must be provided for belt-driven fans.
   c. Fan motors must have a minimum service factor of 1.15.
   d. Operation of fans in smoke mode will be confirmed by positive indication by either adjustable differential pressure sensors, adjustable current sensors, or airflow switches.
      i. Positive confirmation for smoke control fans is defined as the smoke control fan operating in its true ON condition. Where such a configuration is not achieved when required, a FAULT status must be displayed at the smoke control panel.
   e. Fans must be capable of operating under temperatures as predicted by the Smoke Control Rational Analysis.
2. Smoke-Control System Ducts
   a. All ductwork must be tested in accordance with MSBC Section 909.10.2.
      i. Duct leakage must be less than 5% of the design flow when tested to 1.5 times maximum design pressure.
      ii. Flexible connections for the purpose of vibration isolation shall be allowed in the exhaust system ductwork configuration, and are not required to be included within the duct leakage testing
   b. Air exhaust outlets must be located to minimize the potential for introducing smoke or flame into the building.
3. Smoke-Control System Smoke Dampers
   a. Each damper associated with the smoke control exhaust system must be provided with monitoring modules to provide positive indication of fully-open and fully-closed statuses.

i. Positive confirmation for smoke control damper is defined as the smoke control damper is positioned in its true OPEN or true CLOSED position. Where such a configuration is not achieved when required, a FAULT status must be displayed at the smoke control panel.

b. HVAC systems in the alarm zone not used for smoke control must shut down in accordance with the sequence of operations.

c. Dampers must be capable of operating under temperatures as predicted by the Smoke Control Rational Analysis.

d. Dampers on smoke control exhaust fans must be arranged to fail in the OPEN position.

e. Dampers on non-smoke control related equipment must be arranged to fail in the CLOSED position.

4. Automatic Doors/Louvers

a. The doors/louvers utilized for natural makeup air flow paths must be power operated doors/louvers to allow for makeup air infiltration from the adjacent spaces.

b. Each door/louver must be provided with monitoring modules for full open and closed statuses and control relays to ensure the door/louver operates appropriately.

i. Positive confirmation for doors and louvers that are used as part of the smoke control system is defined as the doors/louvers configured in the true OPEN or true CLOSED position. Where such a configuration is not achieved when required, a FAULT status must be displayed at the smoke control panel

ii. Each door leaf and louver must be provided with monitoring modules for fully open and fully closed statuses and control relays to ensure the door/louver operates appropriately for smoke mode.

c. If accessible switches are provided to shut power off to the doors/louvers, these switches must be monitored for position (report a fault on smoke control panel when disabled) <u>or</u> capable of being overridden by the smoke control system such that the doors/louvers are still capable of opening in smoke mode with the switch in the “disable” position.

d. Doors must be capable of opening and completing travel to the required smoke mode position within 75 seconds after receipt of an alarm signal.

e. It is recommended that a portion of automatic-opening interior makeup air doors/louvers open prior to operation of the smoke exhaust fans to prevent damage to the door motors.

5. Power Systems

a. The smoke-control systems must be supplied with two (2) sources of power. Primary power may be from the normal building power systems. Secondary power must be from an approved standby source complying with the National Electric Code. It must be confirmed that the generator is capable of supporting the power loads of the smoke control system. Refer to the Secondary Power section of the Smoke Control Rational Analysis for additional information.

b. Elements of the smoke control system relying on volatile memories must be supplied with uninterruptible power sources of sufficient duration to span 15-minute primary power interruption.

i. It is recommended that makeup air door/louvers control systems associated with the smoke control system are provided with an Uninterruptible Power Supply (UPS) to ensure the doors/louvers will open accordingly and position tracking is not lost during a loss of power event, which can prevent the doors/louvers from re-opening.

c. Elements of the smoke-control system susceptible to power surges must be suitably protected by power conditioners, suppressors or other approved means.

d. All power wiring serving the smoke control equipment, regardless of voltage, must be fully enclosed within continuous raceways.

e. **Power to all smoke exhaust fans, dampers and automatic opening makeup air doors/louvers (where provided) must be monitored <u>downstream</u> of any disconnects and VFD's (where provided) at the smoke control panel. This includes monitoring all points of disconnect.**
   i. Monitor all points of disconnect including VFD keypads (where provided), switchgear, local and remove disconnects, bypass switches, etc. Monitoring is not required if those points of disconnect can be automatically overridden by the smoke control system. This also includes monitoring of all points of disconnect for automatic door/louver openers and equipment serving makeup air doors/louvers.
   ii. If the smoke control equipment is disabled due to a service disconnect, breaker, bypass, VFD keypad (where provided), or override switch on makeup air doors/louvers, it must display a fault signal on the smoke control panel.

6. Control Systems
   a. All control equipment associated with the smoke control system equipment must be UL 864 listed. This includes the Firefighter's smoke control panel, fire alarm control panel, fans, damper controls, and door controls.
   b. Supervision for airflow sensing will be by differential pressure sensors, amperage monitoring relays, or airflow sensors. Required supervision will be indicated at the firefighter's control panel.
   c. All wiring, regardless of voltage, will be fully enclosed within continuous raceways (MC Cable is not permitted)
   d. Normal activation of the smoke-control system will be by automatic control.
   e. VFD's (where provided) must be locked out via a passcode or have key pad removed after commissioning of system. It should not be possible to adjust VFDs (where provided) while the system is in alarm mode.
7. Detection Systems
   a. The new equipment installed throughout the atrium (i.e. the exhaust fans and makeup doors/louvers) must be connected to, and monitored by the Fire Alarm Control Panel and Firefighter's Smoke Control Panel.
   b. The smoke control system must undergo a pre-programmed self-test automatically conducted by the fire alarm / smoke control system at a pre-determined time each week. The self-test must provide a printed report indicating the pass/fail of each equipment and overall system pass/fail status.
   c. An appropriately zoned sprinkler system that is coordinated with the location of the smoke control zones is required to be provided. The sprinkler waterflow switch serving each smoke control zone will be programmed to activate the smoke control system serving that zone, depicted in Appendix B.
   d. Appropriate smoke detection must be installed within the atrium at the ceiling level to activate the zoned smoke control system. This additional smoke detection may be beam detection, spot-type smoke detection, or air sampling system.

FIREFIGHTER'S SMOKE CONTROL PANEL

A new Firefighter's Smoke Control Panel must be provided to incorporate the necessary controls and indication for the new smoke control system within the atrium. The firefighter's Smoke Control Panel must be located adjacent to the Fire Alarm Control Panel (MSBC Section 909.16).

The firefighter's control panel must be provided with:

1. An Uninterruptible Power Supply so that it does not lose power in the event of building power failure.
2. Manual control or override of automatic control for smoke-control systems.
   a. The panel will graphically depict the building arrangement and smoke-control system zones served by the systems.

b. Graphically depict the location of fans, makeup air locations, major ducts and dampers within the building that are portions of the smoke-control systems.
   i. The Firefighter's Smoke Control Panel must provide a clear indication of the direction of airflow and the relationship of its components.

3. Control capabilities associated with the smoke control system will be as follows:
   b. "ON – AUTO – OFF" control over each individual smoke control component, which activates/deactivates all necessary fans and opens/closes related dampers and makeup air doors/louvers.
      i. If approved by the Authority Having Jurisdiction a single switch that controls all of the components required for the smoke control system to operate may be provided.
   c. Firefighter's control panel will take highest priority over all other building sources.
   d. The controls and indicators will be combined to control and indicate all elements of the smoke zone as one unit.
4. On the graphic zone panel, status lamps will be provided for the indication of operation of all smoke-control equipment within each smoke zone as a single unit as follows:
   a. Fans, dampers, makeup air openings, and other operating equipment in their NORMAL status - White.
   b. Fans, dampers, makeup air openings, and other operating equipment in their ON or OPEN mode - Green.
   c. Fans, dampers, makeup air openings, and other operating equipment in FAULT mode - Yellow.
   d. Fans, dampers, makeup air openings, and other operating equipment in OFF (or CLOSED) mode - Red.

Sequence of Operation

The smoke control zone will be activated automatically and independently by sprinkler water flow switches (sprinklers zoned within the Atrium Zone Boundary), smoke detection (i.e. via spot-type, beam obscuration or air-sampling system) located along the underside of the atrium roof, or manually via the firefighter's smoke control panel (location to be determined). Refer to Appendix B which depicts the Atrium Zone Boundary.

Upon activation of the fire alarm system, the smoke control system shall be activated in accordance with the operation matrix prepared by the Engineer of Record for the mechanical system at the time of original building construction. These operations include shutdown of normal HVAC within the Building, activation of the smoke exhaust fans, and opening the makeup and doors and louvers.

Upon receipt of an alarm signal, all smoke control equipment must report true positive status (doors, louvers, and dampers report to open status, exhaust fan 100-percent run) within 135 seconds. Makeup air doors/louvers shall open prior to prevent damage to the door motors. Exhaust fan dampers shall open prior to the fan running at 100-percent operation to prevent damage to the damper actuator and capitation of the exhaust fan. System shall be fully operational within 135 seconds of the detection of a fire within the atrium smoke zone.

Table 5: Sequence of Operation

Sequence	Event	Duration
1	Time for Dampers and Doors to Reach Full Open Position	75 Seconds maximum
2	Time for Exhaust Fan to Ramp Up and Achieve 100 percent Run	60 seconds maximum
	System Running at Full Capacity (after detection):	**135 Seconds maximum**

*Note: Fire detection time is dependent upon fire scenario. Detection time has been determined within the FDS scenarios, and subsequently the indicated sequence of operation occurs. Detection through sprinkler activation requires an additional 90 seconds to transmit the waterflow signal to the fire alarm control panel.

SPECIAL INSPECTION AND TEST REQUIREMENTS

In addition to the ordinary inspection and test requirements, smoke control systems are required to undergo special inspections and tests sufficient to verify the proper commissioning of the smoke control design in its final installed condition. The Special Inspector is responsible for verifying that the smoke control system is installed in accordance with the requirements of MSBC Section 909 and that the system achieves the performance defined in the Smoke Control Rational Analysis Report.

The Special Inspector must be employed by the Owner, Owner's Agent, Architect, or Engineer of Record. The Special Inspector must not be employed by the contractor or any other person responsible for the work being installed/performed. The Special Inspector must be a qualified person that can demonstrate competence to the satisfaction of the Building and Fire Department for the inspection and testing of smoke control systems, having expertise in fire protection engineering, mechanical engineering and certification as air balancers (MSBC Section 1705.18.2). Where necessary, testing agencies required by the Special Inspector must be engaged by the Owner or Owner's Agent. Testing agencies that measure HVAC performances (Testing and Balancing agencies) must be certified by the Associated Air Balance Council (AABC) or the National Environmental Balancing Bureau (NEBB). The Testing Agency must also produce documentation that all equipment used to test and balance the smoke control system has been calibrated in accordance with AABC or NEBB.

The smoke control system is required to be inspected and tested in accordance with MSBC Section 909.18.8. Special inspection and testing requirements shall include, at a minimum, the following:

1. The special inspections and tests shall be sufficient to verify the proper commissioning of the smoke control design and to determine the final installed condition is in compliance with the design documents and requirements of the NFPA 92 and the MSBC. Where determined necessary by the local jurisdiction, tests must be conducted in the presence of an authorized representative from the Department of Building Inspections and the Fire Department. Such parties are to be notified of testing to determine their availability and reschedule if necessary. A report of the results must be submitted to both Departments.
2. All smoke control ductwork must be tested for leakage. Duct leakage must be less than 5-percent of the design flow when tested to 1.5 times maximum design pressure. Note, all duct leakage testing must be witnessed by the Smoke Control Special Inspector prior to concealment of ductwork within walls/ceilings.
3. In accordance with IBC Section 909.12.1, NFPA 92 and UL 864 an automatic pre-programmed weekly self-test of the smoke control system must be provided within the system design. The functionality of this pre-programmed test will be required to be reviewed and documented by the smoke control special inspector. In addition, weekly records should be kept on site and a semi-annual test under standby power will be required.

Additionally, after occupancy of the building, all operating parts of the smoke-control systems must be retested every six (6) months in accordance with the retest requirements established by the Engineer of Record, Smoke Control Special Inspector retained at the time of initial commissioning, and with concurrence from the Department of Building and Safety and the Fire Department. The test should be conducted by an approved inspection agency or by the owner or the owner's representative when so approved by both Departments. A report of the test results should be submitted to both Departments.

OVERVIEW

Three types of testing exist for the smoke control system in the atrium. These three types of the tests are:

1. Component System Testing
   a. Component System Testing shall be complete prior to any acceptance testing is to be conducted. The contractor shall certify that all component systems have been checked and are fully operational and meet all design specifications and applicable codes before acceptance testing begins.
   b. This shall include inspection and review by the Smoke Control Special Inspector of all ductwork serving the smoke control system prior to concealment of ductwork within walls/ceilings. Ductwork must be tested in accordance with MSBC Section 909.10.2. Duct leakage must be less than 5-percent of the design flow when tested to 1.5 times maximum design pressure. Flexible connections for the purpose of vibration isolation shall be allowed in the exhaust system ductwork configuration and are not required to be included within the duct leakage testing
2. Acceptance Testing
   a. Acceptance Testing takes place before a certificate of occupancy is obtained. Acceptance Testing will test the integrated smoke control system to confirm compliance with the design specifications and proper operation. Pass/Fail criteria for acceptance testing are outlined later in this section.
   b. This shall include pressure difference testing, flow measurements and detection and control verification for all equipment serving the smoke control system, as well as reviewing the reliability of the monitoring system and controls at the Firefighter's Smoke Control Panel.
3. Periodic Testing and Maintenance
   a. Weekly pre-programmed self-test automatically conducted by the fire alarm / smoke control system at a pre-determined time each week, with printed report indicating the pass/fail of each equipment and overall system pass/fail status.
   b. To be conducted by the owner semi-annually to ensure proper operation after certificate of occupancy is obtained.

COMPONENT AND ACCEPTANCE TESTING CONDITIONS

The following tasks shall be completed prior to starting any smoke control system testing:

1. All ductwork must be testing in accordance with MSBC Section 909.10.2. Duct leakage must be less than 5-percent of the design flow when tested to 1.5 times maximum design pressure. Flexible connections for the purpose of vibration isolation shall be allowed in the exhaust system ductwork configuration and are not required to be included within the duct leakage testing. Note, all duct leakage testing must be witnessed by the Smoke Control Special Inspector prior to concealment of ductwork within walls/ceilings
2. All building equipment shall be placed in normal operations mode.
3. The smoke control system will be demonstrated for proper operation sequences without smoke.
4. Smoke control systems shall be activated manually from the fireman's control panel to verify proper operation for each smoke control zone.
5. Smoke control systems will be activated automatically by activation of sprinkler water flow switches, heat detectors, area smoke detectors or duct smoke detectors.
6. The engineer conducting the testing shall record the following:
   a. Time
   b. Date
   c. Location of Test
   d. Outside Weather Data (including wind speed, direction and temperature)
   e. Inside Weather Data (including wind speed, direction, and temperature)
   f. Initial pressure differences between inside and outside, if any
   g. Number of doors initially open and initially closed
   h. Status of HVAC system for the Building (ON/OFF)
7. Active firefighting equipment shall be available on site prior to any tests being conducted.
8. The building's life safety systems shall be fully operational and checked out for any errors. The Fire Alarm Control Panel shall be free of all alarm and trouble conditions that the engineer believes may pose a conflict with the testing. All exit signs and means of egress marking shall be in place and functioning properly.

PASS CRITERIA

<u>All</u> of the following criteria must be achieved during the same test for the Smoke Control System to be considered passing:

1. Activation of a sprinkler water flow switch serving the smoke zone being tested automatically activates the proper life safety and smoke control functions.
2. Designed air quantities are being delivered within 135 sections of fire alarm activation, or within a timeframe specified by determined by the Smoke Control Special Inspector or Authorities Having Jurisdiction.
3. Designated fire doors close at zone boundary within 75 seconds of fire alarm activation, or within a timeframe specified by determined by the Smoke Control Special Inspector or Authorities Having Jurisdiction.
4. Designated makeup air windows/louvers open within 75 seconds of fire alarm activation, or within a timeframe specified by determined by the Smoke Control Special Inspector or Authorities Having Jurisdiction.
5. Audible and visual fire alarm signal function in accordance with the requirements of the Code.
6. Smoke control systems activate in accordance with the sequence of operations when activated from the firefighter's smoke control panel (location to be determined).

7. Required dampers and fire doors close automatically without assistance of human beings.
8. Life Safety systems operated correctly while under emergency power.
9. Emergency power operates life safety systems (simulate a loss of normal building power while testing life safety systems).
10. Fire alarm and smoke control systems operate correctly on the fire floor when activated manually or automatically.
11. Doors at the zone boundaries are operable within the code requirements for opening forces.
    a. Doors that are closed during the sequence of operation at zone boundaries can be opened and re-closed while fans are functioning.
    b. The system is not designed to maintained pressure differences when the doors are open and the opening of doors during the test is not required.

FAILURE CRITERIA

If <u>any</u> of the following items occur during the test, the test is immediately considered failing.

1. Smoke control equipment does not operate or function.
2. Fire alarm system fails to activate the smoke control system.
3. Fans and related systems do not operate when activated manually at the firefighter's smoke control panel.
4. System does not meet the pass criteria above.
5. Smoke control equipment (dedicated and shared air distribution fans, dampers etc.) does not provide the required air quantities shown on the mechanical engineer's design documents.
6. System fails to return to normal mode when manual override is signaled.
7. Systems fail to function on emergency power.
8. Required doors, louvers, and dampers fail to open (as required).
9. Required doors, louvers, and dampers fail to close (as required).

PERIODIC TESTING REQUIREMENTS

Once the smoke control system has been fully commissioned, it is required to be maintained and comply with the periodic testing and maintenance requirements of IBC, IFC, NFPA 92, and UL 864

1. In accordance with MSBC Section 909.12.1, NFPA 92, and UL 864 an automatic pre-programmed weekly self-test of the smoke control system must be provided within the system design. The functionality of this pre-programmed test will be required to be reviewed and documented by the smoke control special inspector. In addition, weekly records should be kept on site and a semi-annual test under standby power will be required.
2. The smoke control system is required to be inspected and tested semi-annually in accordance with MSBC Section 909.18.8. Semi-annual testing must be performed to sufficiently verify that the smoke control system is properly maintained and still functions and performs in accordance with the final commissioning report prepared by the smoke control special inspector. Testing shall identify the current status of the system, indicate any deficiencies and provide recommendations for correcting such deficiencies. Such information should be kept on site and available for review.

CONCLUSION

This analysis utilized a mechanical smoke control system to maintain tenable conditions along the means of egress system throughout the Framingham Fuller Middle School atrium. This rational analysis demonstrates that tenable conditions are maintained at least 6 feet above any walking surface that forms a portion of the required atrium means of egress system for the evacuation of occupants (MSBC Section 909.8) when protected by the smoke control system outlined herein.

The rationale presented within this report is in accordance with the Massachusetts State Building Code and NFPA 92, and demonstrates compliance with the intent of the Code, which is to maintain tenable conditions along the means of egress during a fire event for a minimum of 1.5 times the required safe egress time, or 20 minutes after detection, whichever is greater (MSBC Section 909.4.6).

APPENDIX A – HEAT RELEASE RATES

This section of the report contains numerous examples of heat release rates expected from a variety of fuels commonly found in assembly occupancies such as this building. These heat release rates have been utilized to evaluate the trial designs and system performance contained in the analysis section of this report.

Figure 42 presents the results of five (5) kiosk fire tests, each with a different configuration including variations in T-shirt arrangement, composition of T-shirts, dimensions of kiosk, materials of the kiosk, variations in air current near the kiosk. Although the configurations of each test were different, the heat release rate curves were very similar, and in no case did the fuel load produce a heat release rate exceeding 2,000 BTU/s.

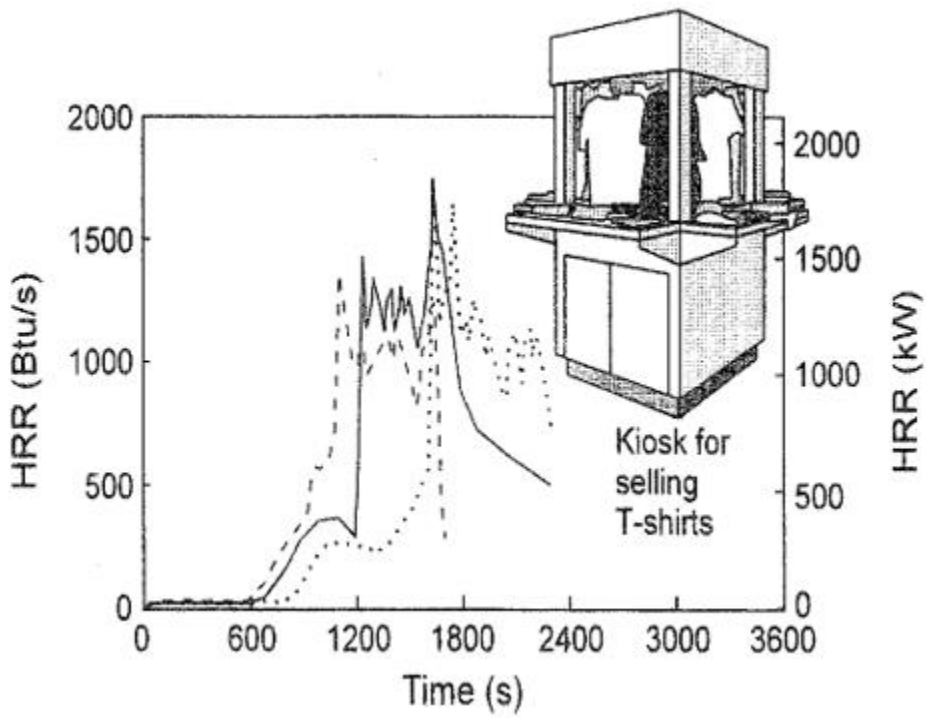

Figure 42: Kiosk Heat Release Rates with Variations

Using a fast growth, 2,000 kW steady state fire is generally considered larger than the fuel load found anticipated for a kiosk/display, and would likely exceed the expected fuel load contained on the space during a typical event.

Example: Two-Panel Workstation Fire

The results of the fire tests for the "Two Panel Workstation Fire" provided a peak heat release rate of 1,749 kilowatts (kW) at a time of 5 minutes. The ignition source for the fire was located below the desk adjacent to the office chair, such as could occur when using a power strip located on the floor. The duration of the fire from ignition to consumption of fuel/burnout was 42 minutes. Figure 43 illustrates the heat release rate as a function of time.

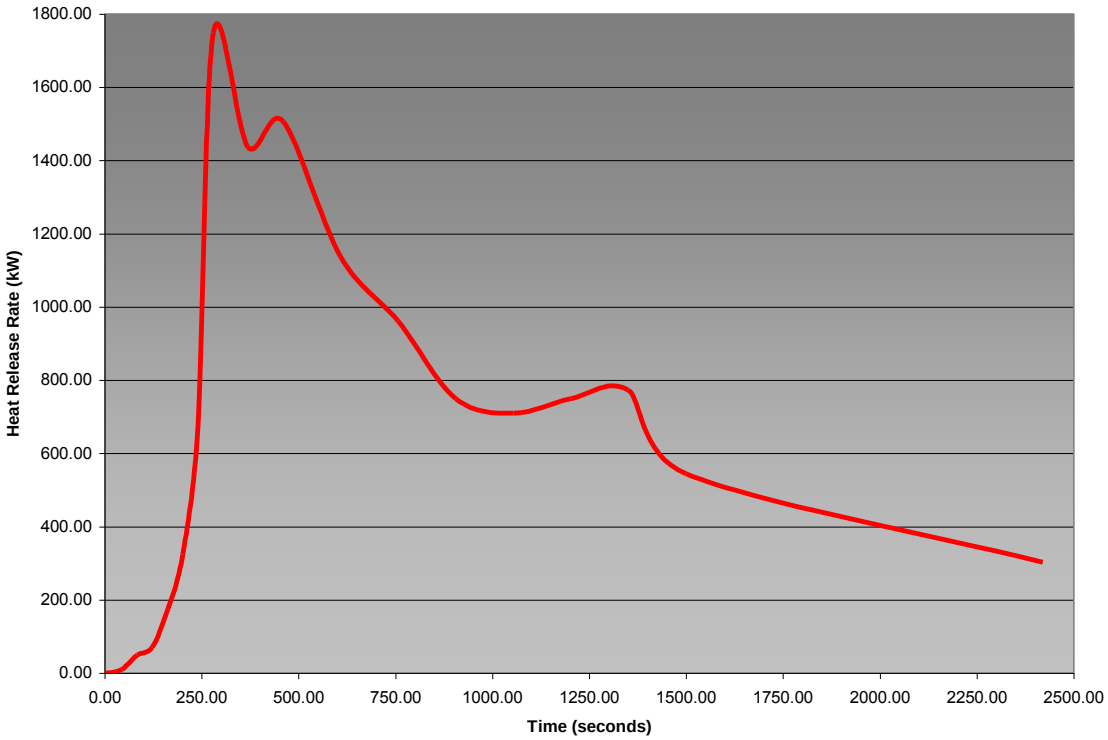

Figure 43: Heat Release Rate vs. Time (Individual Two-Panel Workstation Fire)

Figure 44 through Figure 48 illustrate the development of the Two-Panel Workstation fire, as observed during the testing performed by NIST, at various stages of fire progression.

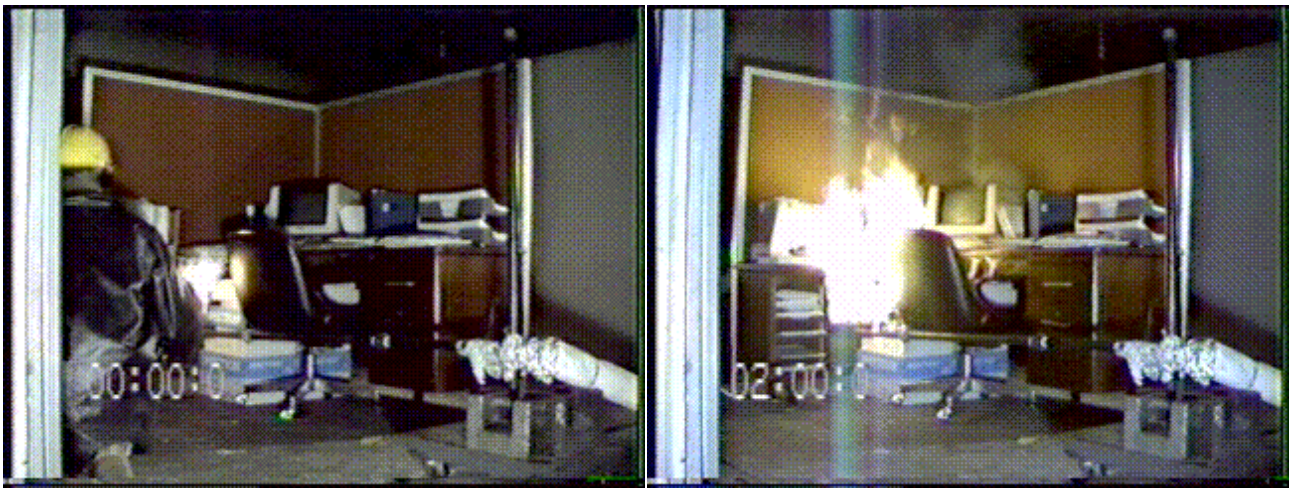

Figure 44: Two Panel Workstation fire at time 0:00 and 2:00 minutes

Figure 45: Two Panel Workstation fire at time 4:00 and 6:00 minutes

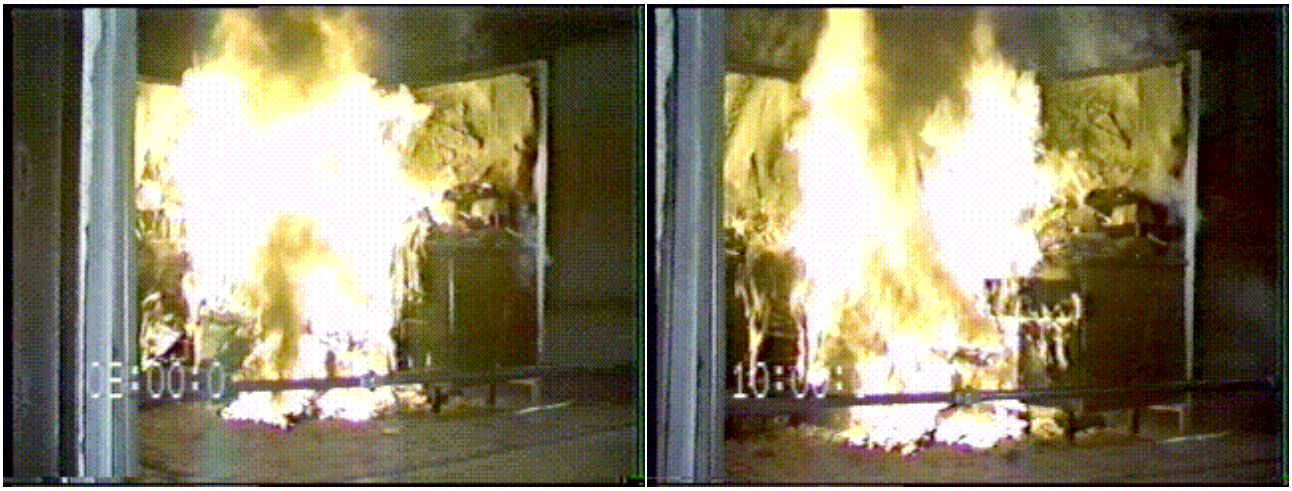

Figure 46: Two Panel Workstation fire at time 8:00 and 10:00 minutes

Figure 47: Two Panel Workstation fire at time 20:00 and 30:00 minutes

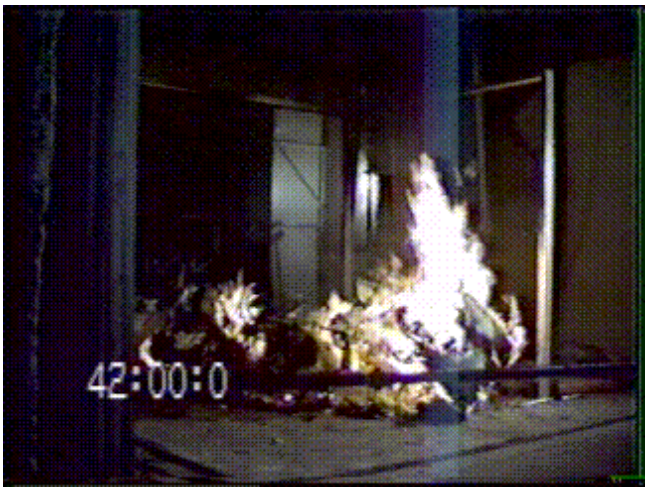

Figure 48: Two Panel Workstation fire at time 42:00 minutes

Published Heat Release Rates (United States Research)

Heat Release Rate (HRR) is the best and primary measure of fire hazard. Heat release rates can be affected by numerous factors, including:

1. Size and configuration of fuel package
2. Location of fuel package with respect to walls, other fuel packages, vents, etc.
3. Ignition source and location of ignition
4. Room size, construction material, vents, fire protection systems, etc.

Table 6: Approximate "Typical" Examples of Peak Heat Release Rates

Materials	Heat Release Rate (kW)
Kiosks and Displays	
Display Kiosks (Kiosk structure only)	1,400 - 2,000
Office Workstation Setup	
Computer Workstation	1,000-1,300
One Unit Workstation	1,200 – 3,000
Two-Panel Workstation	2,000
Garbage and Refuse	
Medium Wastebasket with milk cartons	105
Large barrel with milk cartons	148
Trash Bag, One Sack, 1.17 kg	140
Trash Bag, Two Sacks, 2.34 kg	290
Trash Bag, Three Sacks, 3.51 kg	345
Trash Bag, One Sack, 4.1 kg	345
30 Gallon HDPE Garbage Can with Construction Debris	160 - 450
96 Gallon Polyethylene Garbage (empty, no contents)	1,000 - 2,400

Materials	Heat Release Rate (kW)
Stackable Chairs	
Chair Mockup	63-66
Chairs (<10, metal frame)	80-2,480
Single Metal Frame, upholstered stacking chair	90
Single Stackable Chair, Polypropylene with Steel Frame, no Padding	150
Metal Frame, upholstered stacking chair 4 chairs in 1 stack	240
Two Swivel Office Chairs	275
Upholstered chair with polyurethane foam	353
Two Metal Frame Chair	475
Metal Frame, upholstered stacking chair 8 chairs in 1 stack	500
5 Stackable Chairs in 1 row, Polypropylene with Steel Frame, no Padding	750
Metal Frame, upholstered stacking chair 8 chairs in 1 stack in the corner	900
8 Stackable Chairs in 4 rows, Polypropylene with Steel Frame, no Padding	1,250
6 Stackable Chairs in 1 stack, Polypropylene with Steel Frame, no Padding	1,900
12 Stackable Chairs in 2 stacks, Polypropylene with Steel Frame, no Padding	2,200
Furnished Room (Dwelling Unit)	
Wastepaper Basket (no contents)	4-18
TV set	120-290
Curtains, Acrylic/Cotton	130-150
Arm Chair	160
Curtain, Velvet, Cotton	160-240
Sofa	3,120
Small Air Conditioner with a Plastic Housing	300
Wooden Desk	640
Loveseats	940-2,980 (370, metal frame)
Latex foam mattress (heat at room door)	1265
Wooden Dresser	1,800
Typical House Hold Furnishings	
Palm, Slim Plastic House Plant	50
Ficus, Plastic House Plant	10
Manzanita Bush 1.11 kg, 87% Moisture Content	135
Ceanothus Bush 2.07 kg, 31% Moisture Content	95
Palm, Bushy Plastic House Plant	180
Rockrose Bush 2.03 kg, 14% Moisture Content	265
Christmas Tree, Dry	500-650
PVC Christmas Tree (peak was much greater, due to fast rise time)	600 - 978
Juniper Bush 2.07 kg, 31% Moisture Content	810

APPENDIX B – ATRIUM ZONE BOUNDARY

Appropriately zoned sprinkler water flow switches (sprinklers zoned within the Atrium Zone Boundary), or appropriately zoned partial coverage spot-type smoke detection and beam detection are required to activate the smoke control system. The intent of creating an Atrium Zone is to activate the smoke control system when a fire originates within the Atrium, or when the smoke from an adjacent space is spilling into the Atrium and activates a device within the Atrium. The smoke control system should not be activated upon the activation of a sprinkler/waterflow or smoke detection device outside of the Atrium Zone. This would cause smoke to migrate into the Atrium, creating a greater hazard.

To help facilitate the appropriate zoning of sprinkler/waterflow, and smoke detection devices please refer to the Figure 49 through Figure 51 below. All sprinkler/waterflow and smoke detection devices within the BLUE highlighted area are within the Atrium Zone and should activate the smoke control system. All sprinkler/waterflow and smoke detection devices outside the highlighted area should not activate the smoke control system.

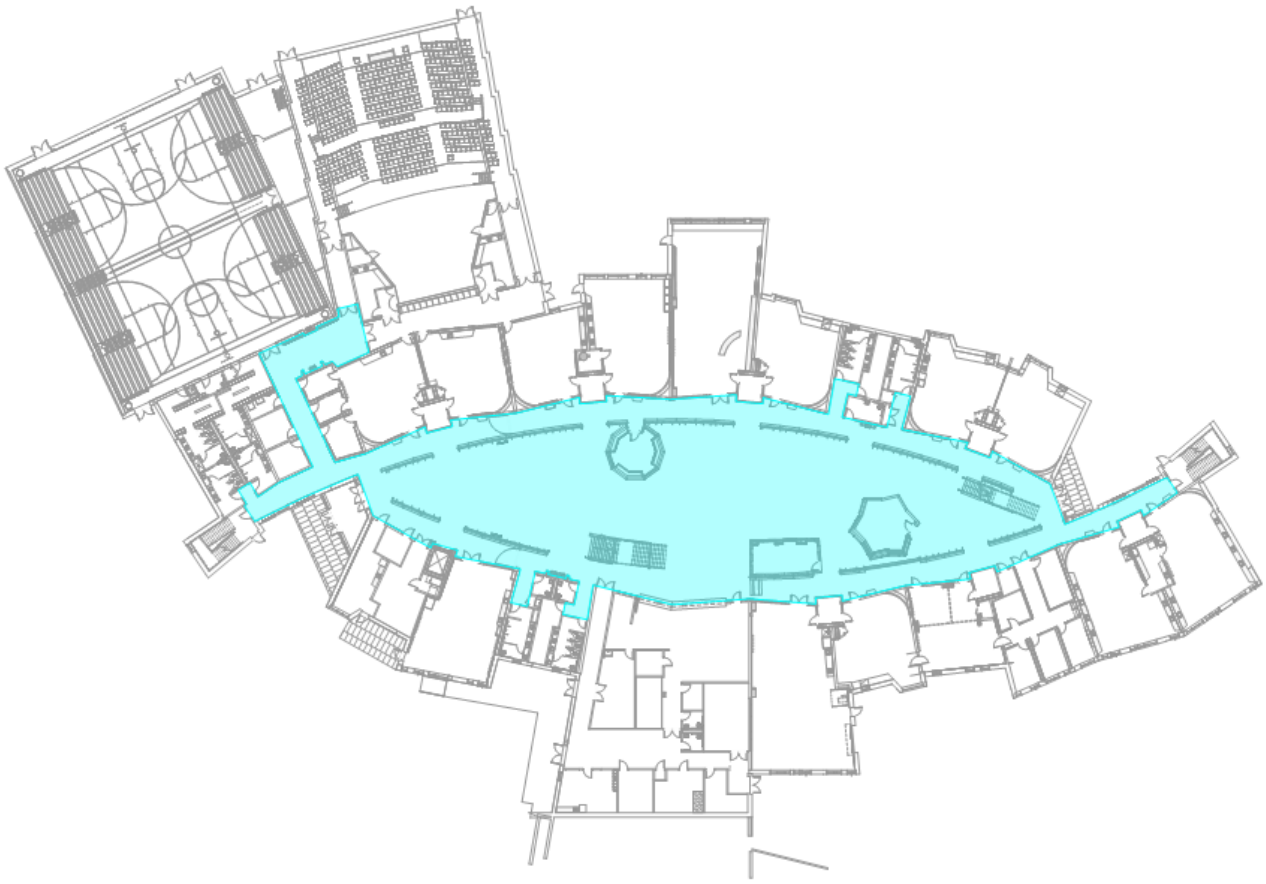

Figure 49: Floor 1 – Atrium Boundary Zone

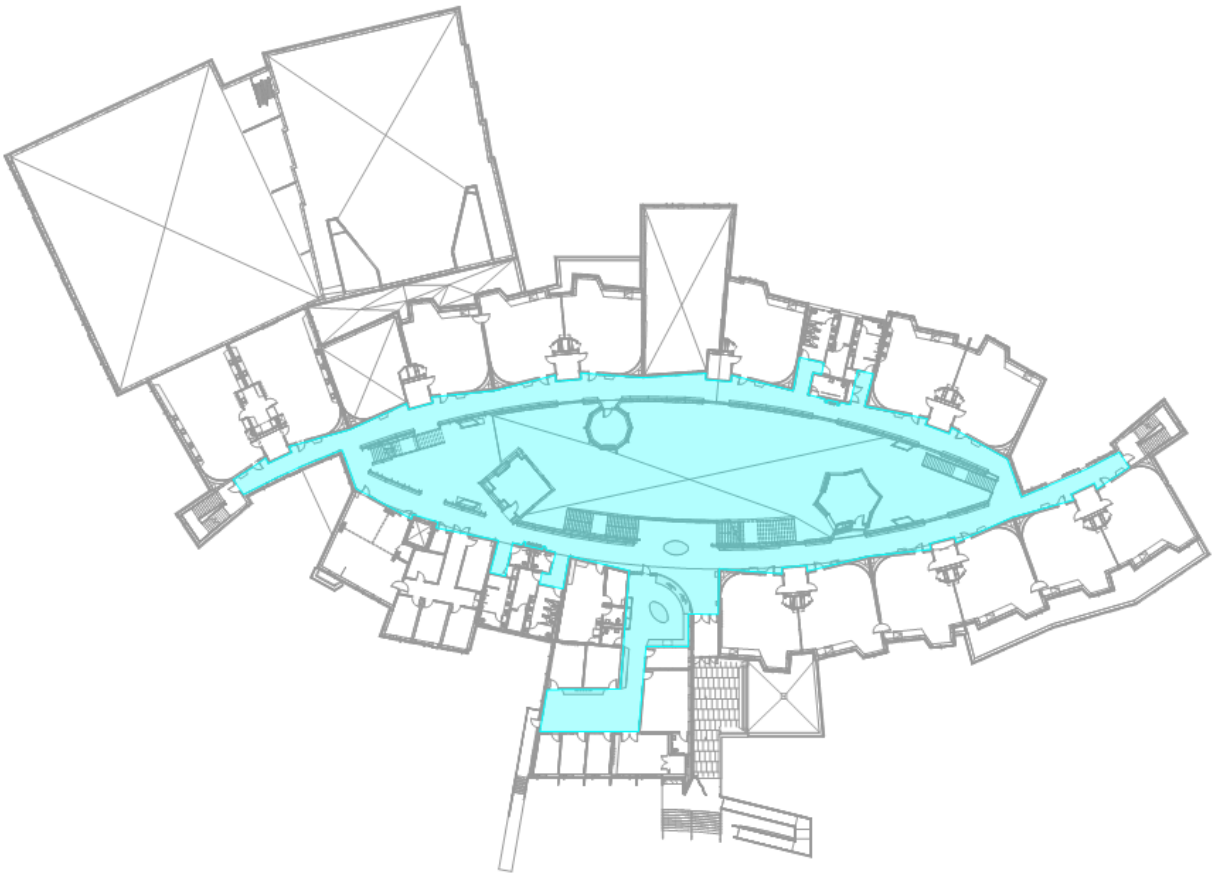

Figure 50: Floor 2 – Atrium Boundary Zone

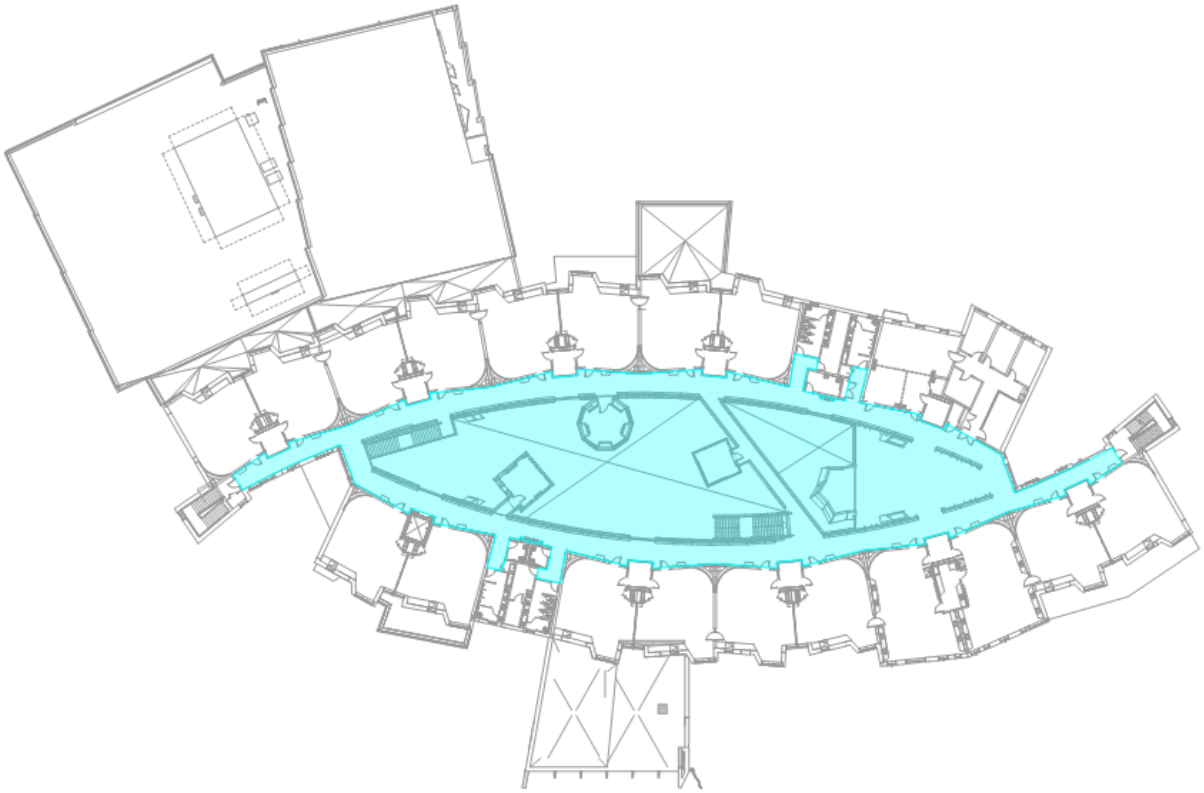

Figure 51: Floor 3 – Atrium Boundary Zone

APPENDIX C – TIMED EGRESS ANALYSIS

An occupant movement and egress analysis utilizing the SFPE numerical calculation was performed for Floor 1 through Floor 3. The Life Safety Drawings created by Howe Engineers dated October 18, 2019 were utilized in order to perform the egress analysis (determine occupant loads and distribution to exits). Any changes to the Life Safety Drawings may impact the results of this analysis, thus requiring this analysis to be reevaluated. There are many components that contribute to calculating the available safe egress time (RSET). As shown in Figure 52 from the Society of Fire Protection Engineering, the calculated RSET is broken down into three (3) distinctive phases: Detection Time Phase (this phase includes detection time and alarm transmission time), Pre-movement/Delay Time to Start Phase (this phase includes recognition, and response time), and the Movement Time Phase. These components are described in more detail within the corresponding sections below.

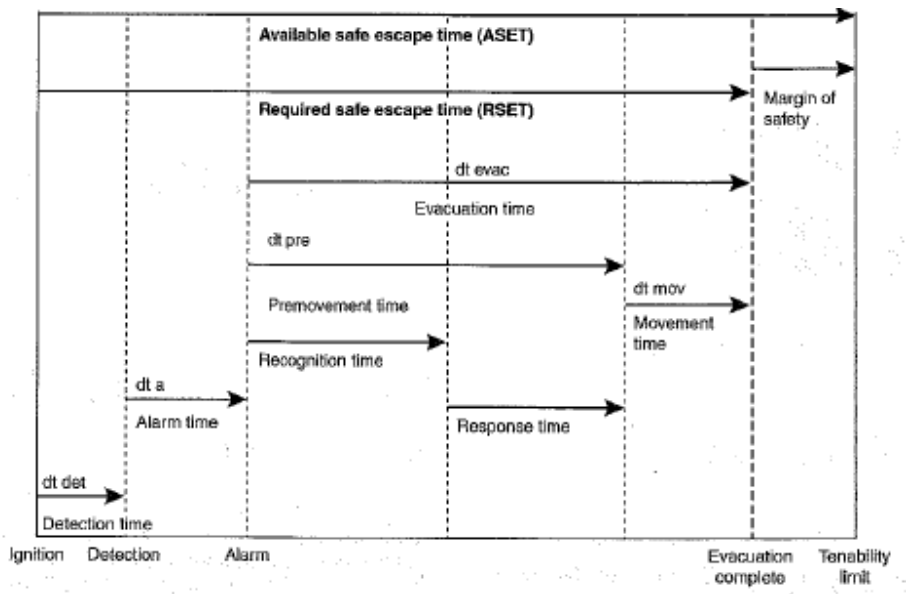

Figure 52: Egress Time Model

DETECTION TIME PHASE

The interval between fire ignition and the first detection of the fire by a device or an individual. For this analysis, the means of fire detection is via smoke detection, or sprinkler activation and waterflow switch. Note, the building will be provided with smoke detection throughout.

1. Detection Time: Smoke detection is modeled within the building. The longest time to detection of a smoke detector in any of the scenarios presented in this report is approximately 103 seconds, therefore, to remain conservative a detection time of **103 seconds** was used for this analysis.
2. Alarm Time: The interval between detection of the fire and the time at which an alarm signal is activated or notification of occupants takes place. In most cases the alarm time occurs effectively simultaneously with the detection time and therefore no additional time is required to be added for alarm time. However, for conservatism, a **10 second** delay is included within this analysis, which is the maximum transmission time of an alarm signal allowed by NFPA 72.

PRE-MOVEMENT TIME PHASE

The interval between the time at which the alarm signal is given and the time at which the decision is made and the person starts evacuation. This consists of two (2) components:

1. Recognition Time: The interval between the time at which the alarm signal is perceived and the time at which the occupant interprets this signal as indicating a fire/emergency event. This time includes investigation and milling.
2. Response Time: The interval between recognition time and the time at which the first move is made to evacuate the building. This time includes activities such as firefighting, warning others, gathering family members and pets, dressing, retrieving personal belongings, calling the fire department, etc.

Table 7 below is provided to approximate the Alarm Time, Recognition Time and Response Time for given occupancies based on the type of warning system, the type of occupancy, and the characteristics of the occupants. The Framingham Fuller project, which is classified as primarily a Group E educational occupancy, will be provided with an emergency alarm/voice communication fire alarm system. Conservatively, a "W2" delay for buildings, which denotes occupants that are awake but not familiar with the building, shall be used for analyzing occupant movement, and an applicable occupant pre-movement time after alarm of **3 minutes (180 seconds)** will be used.

Table 7: Estimated Delay Time to Start Evacuation

Occupancy Type	W1 (min)	W2 (min)	W3 (min)
Offices, commercial and Industrial buildings, schools, colleges and universities (Occupants awake and familiar with the building, the alarm system, and evacuation procedure.)	< 1	3	> 4
Shops, museums, leisure-sport centers, and other assembly buildings (Occupants awake but may be unfamiliar with building, alarm system, and evacuation procedure.)	< 2	3	> 6
Dormitories, residential mid-rise and high-rise (Occupants may be asleep but are predominantly familiar with the building, alarm system, and evacuation procedure.)	< 2	4	> 5
Hotels and boarding houses (Occupants may be asleep and unfamiliar with the building, alarm system, and evacuation procedure.)	< 2	4	> 6
Hospitals, nursing homes, and other institutional establishment (A significant number of occupants may require assistance.)	< 3	5	> 8

W1: live directives using a voice communication system from a control room with closed-circuit television facility, or live directives in conjunction with well-trained, uniformed staff that can be seen and heard by all occupants in the space
W2: nondirective voice messages (prerecorded) and/or informative warning visual display with trained staff
W3: warning system using fire alarm signal and staff with no relevant training

MOVEMENT TIME PHASE ANALYSIS

The interval between when occupants begin to move toward an exit and when all occupants reach a place of safety. In order to evaluate the performance of the egress components, and to compare it to the results of the CFD modeling, the SFPE Hand Calculations for egress time have been performed for Floor 3, which is the limiting required egress time. The smoke would reach Floor 3, and therefore if all occupants are egressed from Floor 3 prior to smoke reaching them it is assumed that the other levels would also be provided with enough time for the associated occupants to egress appropriately. Please note that the smoke control rational analysis demonstrates that the smoke layer is maintained above Floor 3 for the duration of the scenarios.

Timed Egress Calculations

The timed egress calculation analyzes expected evacuation times from the building under moderate movement conditions, which is expected. A moderate movement scenario may include the evacuation of the floor when everyone leaves the facility, and assumes no blocked exits.

The total time for evacuation can be considered the time required to travel from the most remote point in the building to the rated stair enclosure plus the flow time required for each occupant to pass through the most restrictive egress component (this approach is identified in the SFPE Handbook).

Moderate Movement Conditions

This scenario considers the evacuation of Floor 3 (highest level within the Framingham Fuller Middle School Atrium) when everyone begins to exit the building. The following assumptions were made in calculating the evacuation times:

- Every means of egress from the floor is available for use and not considered blocked.
- The total occupant load of the floor is 636 people, as indicated by Life Safety Plan LS103.
- Occupant distribution to the varying exits varies as indicated by Life Safety Plan LS103.

The following evacuation time calculations are based on adding the time it takes for a person to travel the most remote distance to the time it takes everyone to pass through the most restrictive egress component. For occupant load distribution please reference the Life Safety Drawings.

Flow Time

The flow is the measurement of the flow of evacuating persons past a point in the exit route per unit of time per unit of effective width. The specific flow is calculated by applying Equation (59.6) from the 5th Edition of the SFPE Handbook, Chapter 59, entitled, “Employing the Hydraulic Model in Assessing Emergency Movement” by Steven M.V. Gwynne and Eric R. Rosenbaum. The specific flow is calculated as follows:

$$F_s = SD$$

Where:
F_s = specific flow in persons/minute/ft of effective width
S = speed in persons/minute
D = density in persons/ft^2

Table 8 shows the specific flows for various aspects of the egress system at moderate densities.

Table 8: Specific Flow for Moderate and Crush Densities

Egress System Component	**Speed (persons/minute)**	**Density (persons/ft^2)**	**Specific Flow (persons/minute/ft)**
Doorways	196.35	0.1	**19.64**
Stairs with 7 inch riser and 11 inch tread	151.37	0.1	**15.12**

The calculated flow for a given point is determined by applying Equation (59.8) from the 5th Edition of the SFPE Handbook, Chapter 59, entitled, "Employing the Hydraulic Model in Assessing Emergency Movement" by Steven M.V. Gwynne and Eric R. Rosenbaum. Calculated flow is determined by multiplying the specific flow by the effective width of the given point (ie: doorway, stair, ramp, etc.).

$$F_c = F_s W_e$$

Where:
F_c = calculated flow in persons/minute
F_s = specific flow in persons/minute/ft = 19.64 persons/min/ft for doors
W_e = effective width in feet = Door width – 6" boundary from each side

The estimated flow (minutes) can then be determined by dividing the number of persons exiting (provided on the Life Safety Drawings) by the Calculated Flow (F_c). A summary for each of the exits on Floor 3 is provided below:

FLOW TIME RESULTS[1]					
Flow Point	Limiting Component	Width	Number of Persons Exiting	Calculated Flow [F_C] (persons/min)	Estimated Flow Time (minutes)
Stair 1	Door	2'10"	213	36.00	**5.91**
Stair 2	Door	2'10"	101	36.00	**2.80**
Stair 3	Stair	4'7"	121	54.18	**2.23**
Stair 5	Stair	8'4"	201	110.88	**1.81**

Notes:
1. Please Reference Life Safety drawings for occupant load distribution information

As shown in the table above, since the occupant load distribution varies, Stair 1 has a larger number of occupants using the stair. Therefore, the flow time at Stair 1 is significantly longer. The flow time for Stair 1 of **5.91 minutes** will be used in calculating the total evacuation time. This assumes no aid in the evacuation process from operations personnel to produce a conservative approach.

Travel Time

The speed along the line of travel can be determined by applying Equation (59.5) and Table 59.2 from the 5th Edition of the SFPE Handbook, Chapter 59, entitled, "Emergency Movement" by Harold Nelson and Hamish MacLennan. The speed of movement along a level line of travel is calculated as follows:

$$S = k - akD$$

Where:
S = speed
D = density; (Moderate Density = .1 persons/ft^2)
k = constant, from Table 3-14.2, seen below.
a = 2.86 for speed in ft/minute and a density in persons/ft^2

Table 9 shows the speed of movement along a line of travel for various aspects of the egress system.

Table 9: Speed of Movement for Moderate and Crush Densities

Egress System Component	**k = constant from Table 3-14.2**	**D = Density (persons/ft^2)**	**Speed (ft/minute)**
Level Surfaces & Doorways	275	0.1	**196.35**
Stairs with 7 inch riser and 11 inch tread	212	0.1	**151.37**

The travel time is calculated from the most remote point to the egress component which yields the longest flow time. In this case, travel time is calculated for the maximum travel distance to each of the stair exits as shown on the Life Safety Drawing. The travel time is calculated as follows:

TRAVEL TIME RESULTS			
Travel Points	Estimated Distance on Level Surface (ft)	Speed on Level Surface (ft/min)[1]	Estimated Travel Time (minutes)
Stair 2	237'0"	196.35	**1.21**
		Maximum Travel Time (min) =	**1.21**

Notes:
1. Speed of occupants is based on travel over a relatively flat surface and equation S= k - akD (SFPE Handbook); where k= 275 for ramps; a=2.86 (constant); and D=0.1 for moderate density

As shown in the table above, the total travel time that can be expected from the most remote area to the stair of the building is **1.21 minutes**. Therefore, the TOTAL evacuation time expected for every occupant on Floor 3 to reach an exit enclosure **7.12 minutes** (5.91 min + 1.21 min= 7.12 min).

CONCLUSIONS

The Required Safe Egress Time (RSET) is based on the time at which the last occupant in the timed egress analysis leaves the interior portions of Floor 3 via an exit enclosure (i.e. exit stairway or exit passageway). The total RSET for the building is based on the maximum time for an occupant, within the atrium, to reach an exit. A 50-percent margin of safety is applied to calculate the movement time that was used to determine the Required Safe Egress Time (RSET), as required by MSBC Section 909.4.6.

The atrium spaces are large volume spaces and there is active smoke control to prevent large exits from being blocked by fire locations, the analysis is not required to address blocking of exits.

Given the information presented above, we would expect the following total Required Safe Escape Time (RSET):

Fire Alarm Detection Time	**+**	**Pre-Movement Time**	**+**	**Movement Time** (+ 50% Safety Factor)	**=**	**Required Safe Escape Time**
1 min 53 seconds	+	*3 mins 00 seconds*	+	*10 mins 41 seconds*		*= 15 mins 34 seconds*

Based on the Smoke Control Rational Analysis Report, the smoke control system is capable of maintaining Available Safe Egress Time (ASET) in excess of 25 minutes. Since the ASET is greater than the RSET of 15 minutes 34 seconds, it can be determined occupants will be able to evacuate the building while tenable conditions are maintained along the egress paths in the atrium of the building. Additionally, it is important to note, the results within smoke control rational analysis demonstrate the smoke control system reaches steady state smoke level conditions within the 25-minute model duration. Therefore, it is expected that tenable conditions will be maintained indefinitely, provided the smoke control system is operational.

APPENDIX C

FOOD SERVICE CUT SHEETS

DO NOT REMOVE
THIS PAGE INTENTIONALLY LEFT BLANK

CUT BOOK

of

FOODSERVICE EQUIPMENT

for

FULLER MIDDLE SCHOOL

FRAMINGHAM, MA

May 17 th 2019

PLEASE NOTE:
Cut sheets within this book are provided specifically for use by the owner or operator for their approval, and for use by the design engineers during the Construction Document development phase.
They are not intended for use as bid documents.

F O O D F A C I L I T I E S P L A N N E R S
161 West Main Street, Georgetown, Massachusetts 01833 phone: 978.352.8500 fax: 978.352.8588
mail@crabtree-mcgrath.com

Crabtree McGrath Associates, Inc.

PROJECT: **Fuller Middle School**

DATE: **May 17 th, 2019**

ARCHITECTURAL AND ENGINEERING INFORMATION FOR FOODSERVICE FACILITIES

NOTE:
1. The materials in this equipment cut book are specifically for the use of the owner or operator for their approval and for use by the design engineers during the Construction Document development phase. They are not intended to be used as bid documents.

2. The following material makes mention of various contractors in the related trades. These contractors are normally sub-contractors to the General Contractor, or directly engaged by the Owner depending on the project. It should be understood that the work of these contractors is not included under the Foodservice Equipment Contract (Section 114000).

ARCHITECTURAL

Walls, floors and ceilings in foodservice areas must be smooth and readily cleanable. Materials that cannot withstand moisture and detergents must be avoided. Wall finishes that bear consideration are ceramic tile, glazed block, concrete block with flush joints, smooth finish and epoxy paint, and fiberglass panels. The minimum: epoxy paint over two layers of waterproof gypsum board on metal studs. The latter fails to meet the requirements of many inspectors when placed in a moist area such as potwashing, dishwashing or vegetable preparation. If there are exposed corners that can be damaged, we recommend that they be fitted with a rugged corner guard from the top of the coved floor to a point 48" above floor.

Walls located behind or beside cooking equipment must be of non-combustible construction. The 1998 edition of NFPA-96, chapter/paragraphs 1-3 and Appendix A greatly expand and illustrate the requirements of walls and grease duct enclosures.

Closure panels will be specified for major foodservice equipment items that join the building such as an exhaust ventilator or walk-in refrigerated rooms. Details will follow.

Ceilings criteria is on sound deadening and the ability to be cleaned. A number of materials are available from metal pans, lay-in mylar faced acoustic panels, to solid "plastered" ceilings. We recommend that ceilings be accessible. If possible, light fixtures should be installed flush with the ceiling.

Floors must be able to handle standing water, heat, falling items, and food chemicals. Further, they must be non-combustible and slip resistant. If the building's design age is for fifty years 'plus', be sure to

161 West Main Street, Georgetown, Massachusetts 01833 phone: 978.352.8500
mail@crabtree-mcgrath.com

include a comparable floor. Many flooring materials are not capable of surviving the long run. The traditional fine quality foodservice flooring material is quarry tile that has been installed with a waterproof grout. Avoid very dark, very light and textured finishes as they always look dirty. All edges at walls should be coved up in order to maintain sanitary conditions. In order to make the flooring more slip resistant, the tile is available with textured finishes and embedded carbide grit in the surface. The textured finish is noisy when carts are rolled over it and the latter is very difficult to clean and it will shred a mop rapidly.

The alternative that we are seeing quite often is "Hubbellite" (www.hubbellite.com) or a member of the trowelled-on epoxy floors. This brand seems to have the most suitable characteristics. Many of the others are very slippery, or if made slip resistant they become impossible to clean. Check actual samples as we have found some are not slip resistant when wet. This material can be coved up at the walls.

It is reported that cost savings can be found with the sheet vinyl products. Flooring such as Altro's "High Performance Stronghold™ 30" offers the seamless surface, slip resistance and resiliency that many look for on kitchen floors. Before recommending it for a project, be sure to read the six page cleaning and maintenance brochure as this flooring material requires care. Reviewing its "Properties and Tests", it should be noted that it is suitable for temperatures from -4°F to +140°F. We have had two reports lately of a floor melting beneath a range and a floor igniting beneath a steam generator, both of which were mounted on 6" high legs. We must know about this material's selection in the design phase of the project to modify feet for the purpose of spreading weight. A 1,200 pound double deck convection oven rests on approximately 7 square inches of footprint exerting a force of 170 pounds per square inch that can squish the flooring from beneath the foot.

When walk-in refrigerated rooms are provided in a project, the preferred installation is one in which the rooms are flush with the adjoining building floor and of the same material. This finished flooring must be installed by the Flooring Contractor to the General Contractor. In order to install the rooms in this fashion, it is necessary to provide a 7" deep recess measured from the finished floor surface. Suggested details will follow.

NFPA 10, Standard For Portable Fire Extinguishers, Paragraph 2-3.2, requires Class K fire extinguishers for the protection of cooking appliances that use combustible cooking media (vegetable or animal oils and fats). This can affect the type and placement of hand held extinguishers normally specified by the Architect.

VENTILATION

Exhaust blowers for exhaust ventilators and dishwasher connections shall be provided by the Heating and Ventilating Contractor. Blowers should be belt driven, adjustable and controlled by a switch with pilot light located within the area being exhausted. We will provide the required air volumes to be exhausted and the static pressure of the ventilator. Static pressure measurement shall be at the exhaust collar.

The HVAC Contractor shall make an approved type connection to this collar in accordance with NFPA 96, Vapor Removal From Cooking Equipment. Ductwork required for the connection of ventilators to the exhaust blower must be of at least 16 gauge carbon steel or 18 gauge stainless steel, all welded watertight construction, and pitched for proper drainage. Long horizontal runs should be avoided if at all possible. All ductwork shall be provided by the HVAC Contractor.

If ductwork between the blower and the ventilator is relatively short, take care to specify blowers with reduced noise output. Many times we visit the field to find the staff cooking without the blower running. When questioned, they claim excessive noise. Failure to operate the blower defeats the ventilator's grease and fume collection functions and many safety requirements when gas cooking equipment is in use.

Non-cooking exhaust ductwork such as dishwasher exhaust system, etc. cannot be connected to the grease ductwork. Separate systems must be maintained.

Warewashers will commonly be provided with stainless steel ductwork risers by the KEC to a point 3" above the finished ceiling. Riser size will be provided by our office. The KEC shall provide a balancing damper for each duct riser. HVAC Contractor shall make the connection to the two straight ducts above the ceiling. Ductwork must be self draining and rust resistant. The chemicals used with commercial warewashers will rot aluminum ductwork through time. If an exhaust canopy is to be provided, it will have a single exhaust connection point, and the size and air volume information will be provided by our office.

NFPA-96 chapter/paragraphs 4-8 state the requirements for ductwork termination and blower accessibility for duct cleaning.

A wet chemical fixed pipe fire suppression system shall be provided and installed by the KEC.

Conditioned make-up air must be supplied by a controlled means in proper quantity; a minimum of 75% of air exhausted through the hood or ventilator. Clean transfer air from adjacent spaces is an acceptable source of make-up air. The kitchen should operate at negative pressure to prevent kitchen odors from reaching adjacent areas. Exhaust and make-up air blowers should be interlocked to a control point located in the kitchen and a positive damper should be installed in the duct to prevent unwanted gravity caused air infiltration after the system has been shut down.

ELECTRICAL

It has been brought to our attention that the National Electrical Code now requires Ground Fault Circuit Interruptor receptacles in all non-dwelling kitchen branch circuits. The engineering team will need to decide if a particular state has adopted NEC and when to provide such receptacles in a kitchen. It has been reported that commercial reach-in refrigerated cases are continually tripping GFCI outlets and causing serious problems with lost food or the task of moving the unit to reset the outlet. If possible, these outlets that are generally inaccessible should be provided with standard outlets. Convection ovens and combination ovens have been reported to trip GFCI outlets, therefore we recommend the use of Pass & Seymour 2095-W, 115 volt, 20 amp GFCI Duplex Receptacles. Our plans will no longer distinguish between normal receptacles and GFCI receptacles. Equipment specified by our office with mounted receptacles will be specified with GFCI's.

Food service equipment having motors, electrical heating units, lighting fixtures, receptacles and the like shall be internally wired to a junction box mounted on the equipment by the Kitchen Equipment Contractor. The components of remote refrigeration systems are not internally wired and require field wiring by the Electrical Contractor.

The Electrical Contractor shall furnish and install switches and receptacles not integral with the specified equipment and not called for in the "Item Specifications" of the project. The Electrical Contractor will furnish, install and connect all wiring and conduit from the junction box mounted on the items of equipment to the building electrical distribution system.

The Electrical Contractor shall mount and wire all motor starters and other electrical devices furnished under the Kitchen Equipment specifications that are not an integral part of the equipment furnished. The most common applications of remote electrical components would be the refrigeration systems for the refrigerated rooms or a garbage disposer. The latter has a remote control switch, remote solenoid valve, and sometimes, a remote starter or contactor.

Electrical Contractor shall provide disconnects if the code requires. Dishwashing and cooking areas of the kitchen are wet and steamy areas and care should be exercised in the selection of disconnects in these areas to comply with applicable codes. On many jobs that we visit, these are mounted on the dishwasher framework with an array of Unistrut and carbon steel running thread. This is unsightly, unsanitary, and undesirable. An attempt should be made to wall mount the disconnects to avoid the splashing of water.

All conduit and flexible conduits that are exposed to water, splashing, or weather should be liquid tight.

Fire suppression:

> The fixed-pipe fire suppression system shall be provided and installed by the KEC. Sources of heat and fuel must be shut-off to all equipment located under the kitchen exhaust ventilator per NFPA 96 2011, paragraphs 10.4. This requirement includes electrical components subject to exposure in the event of a system discharge.
>
> Shut-down of electrical equipment with the suppression system is accomplished by means of contactors or a shunt trip provided and installed by the Electrical Contractor for the required pieces.
>
> The mechanical control head of the fire suppression system will be provided with appropriate "dry contacts" for the Electrical Contractor to utilize to activate (or deactivate) his components. All interwiring wiring is to be provided and installed by the Electrical Contractor.

Refrigerated rooms:

> Wiring within the room must be kept to a minimum. Such wiring should be run in moistureproof conduit and should be sealed with brine putty or silicone to prevent moisture from entering and condensing in the light fixtures, boxes and conduit. Room manufacturers recommend use of a seal-off fitting, mounted exterior to the box to accomplish this task. It should be noted that the conduit needs to be sealed internally and externally. If not, warm moisture will be drawn into the conduit and make its way past the wiring.
>
> Power feeds for the condensing units and evaporator coils are roughed in at their respective locations. The Electrical Contractor shall run six wires, 24 volts, between the two units to control defrost timing, etc. in separate conduit from power wires. The required heavy wiring between units of years ago has been eliminated. The thermostat, defrost timer and solenoid valve are now factory installed at the evaporator coil in each room.

The freezer drainline heat tape, provided by the KEC, shall be plugged into a full time live duplex outlet provided by the Electrical Contractor located in the vicinity of the evaporator coil.

All pieces of kitchen equipment that are shown on our plans with cords and plugs shall be provided with the proper cord and plug by the KEC.

Lighting for kitchen exhaust ventilators shall be furnished as part of the ventilator by the KEC and the wiring shall terminate in a single junction box. Electrical Contractor shall make the final connection and provide a remote switch. On the matter of general lighting for the kitchen and related serving areas, it is recommended that approximately 70 foot candles of illumination be provided. If fluorescent fixtures are used, we recommend deluxe warm white tubes so as to avoid distortion of the color or appearance of food. Fixtures must have lens covers, and cannot provide flat top surfaces that could accumulate dust.

Please advise our office early in the project if voltages other than 120/60/1, 208/60/1 and 208/60/3 are to be used. Many pieces of equipment are available in 440/460/480 volt characteristics. Due to difficulty in finding replacement parts for refrigeration units, we cannot recommend voltages above the 208 volt characteristic for that equipment.

PLUMBING

There is a growing tendency to provide lower temperature hot water systems throughout a building. We are finding temperatures as low as 105°F. This is tolerable in the warewashing area because with a larger than normal booster it is possible to fill through the booster and maintain the required 180° F. rinse water. However, 130°F. water is still recommended at the potwashing sink if the detergents are to work. Consideration might be given to providing a second system with the 140° F. water to this equipment. Please advise our office if 140°F hot water is <u>not</u> available in the warewashing room.

Exposed mechanical connections to fixtures in the kitchen and related food service areas, including exposed piping, should be chrome plated in order to maintain sanitary and easily cleaned surfaces that are consistent with the rest of the kitchen and its equipment. The Kitchen Equipment Contractor shall furnish all water faucets and sink outlets with lever type wastes (usually 2" IPS size), and vacuum breakers for all equipment items that are designed to introduce water at less than 2" above flood level of the chamber or tank.

The KEC shall provide a pressure relief valve, pressure reducing valve, two temperature-pressure gauges and a shock absorber for installation on the connecting line between the hot water booster and the warewasher. The Plumbing Contractor must include a single drain valve for the booster with his piping, and make the required connections between the booster and the warewashing equipment. The temperature-pressure gauges should be mounted immediately after the pressure reducing valve on the inlet side of the booster, and on the outlet side to permit closely monitoring of the booster's correct operation.

Stubs for equipment should come out of walls wherever possible. All connecting piping should be neatly assembled by the Plumbing Contractor up away from the floor at least 12" and with a minimum of exposed horizontal runs that are difficult to clean. Care should be taken to specify that piping shall be run in a sanitary manner, off the floor, and supported on something other than steel running thread.

Interconnecting piping must not be reduced in size to a pipe smaller than the inlet size on the equipment or faucet.

Condensate drains in the walk-in refrigerated rooms shall be provided and installed under the Kitchen Equipment specifications.

All piping to the wet chemical fire suppression system shall be installed by the KEC. In a gas fired kitchen the Plumbing Contractor shall be responsible for the mounting of the gas shut-off valve (provided by the KEC) at an appropriate location on the gas line.

Gas fired ranges, ovens, steam generators, etc. will be furnished with gas pressure regulators to reduce pressure to 4" to 7" water column.

Traps for all sinks, troughs, drainers, etc. are to be furnished and installed by the Plumbing Contractor, and where exposed should be at least painted, if not plated, to be as attractive as possible.

Floor drains shall be utilized for any one or a combination of purposes such as area drain for general cleaning, to receive indirect waste lines from food preparation sinks, warewasher, hot food wells, cold pans, coffee drainers, ice machines, etc. For locations on our plans indicating floor sinks, we recommend the J.R. Smith Figure 3001, 12" square with 1/2" grate and dome strainer, or equal.

In cooking batteries, and occasionally at ice machines, we provide stainless steel floor pans with removable fiberglass grate sections. These require a coordinated installation between the Flooring, Plumbing and Kitchen Contractors. When complete, the pan's rim is to be flush with the adjacent finished floor.

Floor drains must be carefully located by the Plumbing Contractor during the roughing-in stage if they are to correctly serve their intended purposes in the kitchen. They must be correctly set for height so that the floors will pitch smoothly and evenly into them without creating a hazardous "hills and valleys" condition.

The Health Departments of most states indirect waste outlets from any sink or device in which a utensil or food item might be placed. These sinks or devices would be vegetable preparation sinks, cook's sink, utility sinks and warewashers. They join the multitude of previously indirectly wasted units such as ice bins, cold plates, steam tables, coffee urn drainers, and the like.

Up until recently, it has been contrary to the Massachusetts Plumbing Code. Massachusetts was unique in that the Plumbing Code required that all sinks be directly wasted or tight wasted. In a battle of code enforcement departments, the Plumbing Code usually won. We understand that the Massachusetts Plumbing Code has relaxed its stand and is leaving the decision to local inspectors, some of whom have allowed the more sanitary indirect waste connections. Our drawings will indicate indirect waste connections where appropriate. If you have an inspector who insists on the solid connections, please advise our office so that we can issue our plans accordingly.

The advent of FOG (Fats Oils and Grease) regulations on kitchen fixtures and sinks, floor troughs and floor drains, is being implemented with an assortment of local interpretations. We have seen the previous standard of running the pot sink through a grease interceptor, in turn run through an outside grease trap. Another project took all sinks and the dishwasher through this route. Another added the floor troughs at the kettle and braising pan. Another added the garbage disposers to the interceptors (we

have yet to figure out how you keep these devices flowing). We do not know where it is all going to end, so please keep a watchful eye and let us know what we should be noting on our drawings.

One further development is the requirement or the automatic grease removal system such as the Thermaco *Big Dipper*. Short of having a basement, connecting all the potential devices to it is impossible. If it is required, please advise our office so that we can provide an extended drainboard at the pot sink to permit parking of the on-floor device.

Cutsheet provided for design intent.
Mop sink & faucet provided by PC

ADVANCE TABCO®
SMART FABRICATION™

STAINLESS STEEL

FABRICATED SERVICE & MOP SINKS

9-OP-20 Shown

9-OP-40DF Shown

Notched Out Front Allows
Ease of Emptying Mop Bucket

9-OP-40 Shown

Fabricated Bowls are Welded
Together at the Seams

Item #: _____ *Qty #:* _____

Model #: _____

Project #: _____

Floor Units

FEATURES:

Floor mounted unit eliminates the need of lifting heavy containers.

Tile edge furnished on the rear.

Bowls rectangular in design for increased capacity.

CONSTRUCTION:

All TIG welded.

Welded areas blended to match adjacent surfaces and to a satin finish.

MATERIAL:

16 Gauge type "304" series stainless steel sink bowl.

18 Gauge type "304" series stainless steel sink apron.

Standing Units

FEATURES:

Leg mounted design.

High back splash.

CONSTRUCTION:

All TIG welded.

Welded areas blended to match adjacent surfaces and to a satin finish.

MATERIAL:

Heavy gauge type "304" series stainless steel.

Conventional

8-OP-16

Economy

4-OP-18

16" High Side & Back Splashes for 9-OP Series Mop Sinks

16 Gauge, 300 Series Stainless Steel
Available with Back & Left Side,
Back & Right Side or Back & Both Sides
(Mounting Hardware Included)

MODEL	Fits Units:	Height Above Finished Floor (A.F.F.)
K-288LorR	9-OP-20	26"
	9-OP-40	32"
K-290LorR	9-OP-28	26"
	9-OP-48	32"
Splashes Available on All 3 Sides		
K-298	9-OP-20	26"
	9-OP-40	32"
K-299	9-OP-28	26"
	9-OP-48	32"

Service & Mop Sink Accessories

Mop Drainage Tray

- 16 Gauge, 300 Series Stainless Steel
- Includes Cast 1/2" Drain & Plastic Hose
- Wall Mounted (Hardware not Included)
- 2" Tray Height with 6" Rear Splash (Overall Height)

MODEL	L x W x H	Approx. Wt.
K-243	32" x 4" x 6"	13 lbs.

FLOW RATE
9.6 GPM/
36.3 LPM

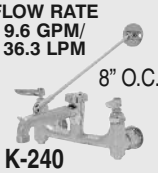

8" O.C.

K-240
SERVICE FAUCET

K-16 FLOOR MOP SINK REPLACEMENT DRAIN

K-242 MOP HANGER - 23" Wide

UTILITY SHELF - 8" WIDE

inches	mm	MODEL	Approx Wt	Approx Cubes
24"	610	K-245	12 lbs.	1
36"	914	K-246	15 lbs.	2

K-244 HOSE & HANGER

Customer Service Available To Assist You 1-800-645-3166 8:30 am - 8:00 pm E.S.T.

Email Orders To: customer@advancetabco.com For Smart Fabrication™ Quotes, Email To: smartfab@advancetabco.com or Fax To: 631-586-2933

Crabtree McGrath Associates, Inc.

Fuller Middle School
Framingham, MA

Item #: 1
Quantity: 1

DIMENSIONS

TOL Overall: ± .500"
Interior: ± .250"

ALL DIMENSIONS ARE TYPICAL

SUGGESTED INSTALLATION

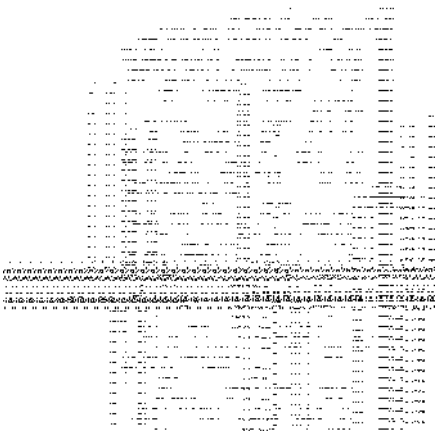

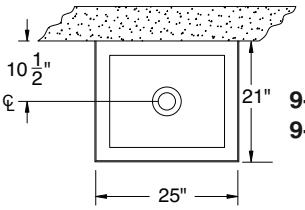

9-OP-20
9-OP-40

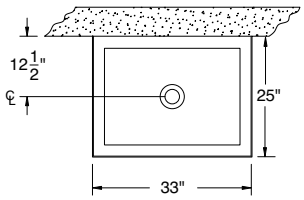

9-OP-28
9-OP-48

9-OP-20: 16" x 20" x 6" Bowl with 10" Overall Height. **Wt. 26 lbs.**
9-OP-28: 20" x 28" x 6" Bowl with 10" Overall Height. **Wt. 35 lbs.**
9-OP-40: 16" x 20" x12" Bowl with 16" Overall Height. **Wt. 45 lbs.**
9-OP-48: 20" x 28" x 12" Bowl with 16" Overall Height. **Wt. 63 lbs.**

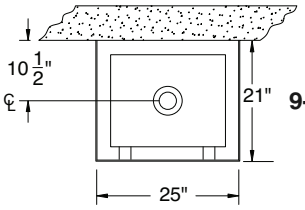

9-OP-40DF

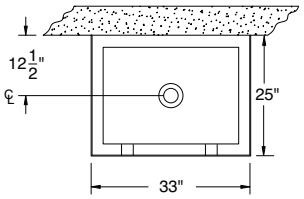

9-OP-48DF

9-OP-40DF: 16" x 20" x12" Bowl with 16" Overall Height. **Wt. 45 lbs.**
9-OP-48DF: 20" x 28" x 12" Bowl with 16" Overall Height. **Wt. 63 lbs.**

MOP SINK DRAIN ASSEMBLY

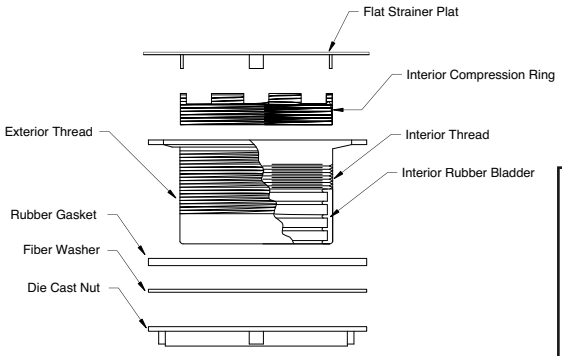

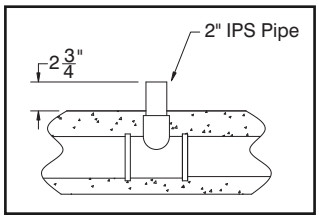

K-243 MOP DRAINAGE TRAY

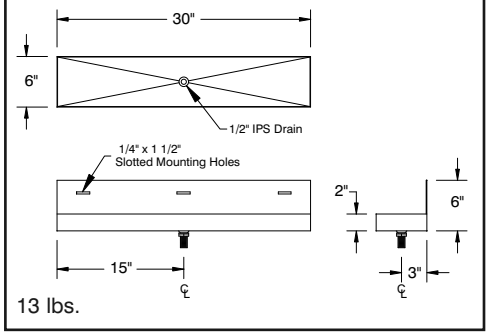

13 lbs.

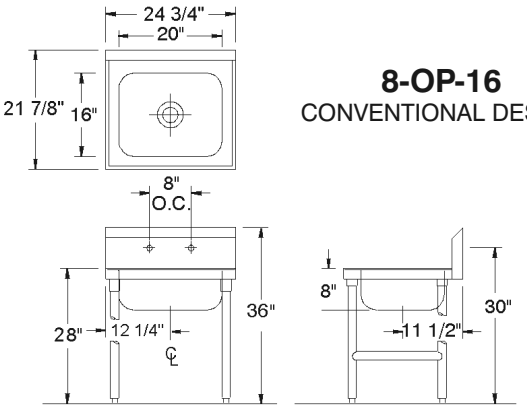

8-OP-16
CONVENTIONAL DESIGN

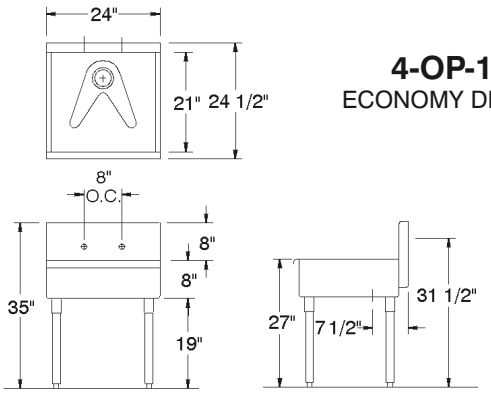

4-OP-18
ECONOMY DESIGN

1 1/2" IPS

ADVANCE TABCO®
SMART FABRICATION™

STAINLESS STEEL

UTILITY SHELF

NSF

Item #: _____ ***Qty #:*** _____

Model #: _____

Project #: _____

8" Wide

K-245 Shown

Model #	Width	Length
K-245	8"	24"
K-246	8"	36"

FEATURES:

Furnished with Mop Hangers and Hooks for hanging rags.
Both rag hooks and mop hangers are spot welded to shelf.

CONSTRUCTION:

Shelf and brackets are die formed.

MATERIAL:

18 gauge stainless steel type "430" polished to a satin finish.

DETAILS and SPECIFICATIONS

TOL ± .500"

ALL DIMENSIONS ARE TYPICAL

K-245

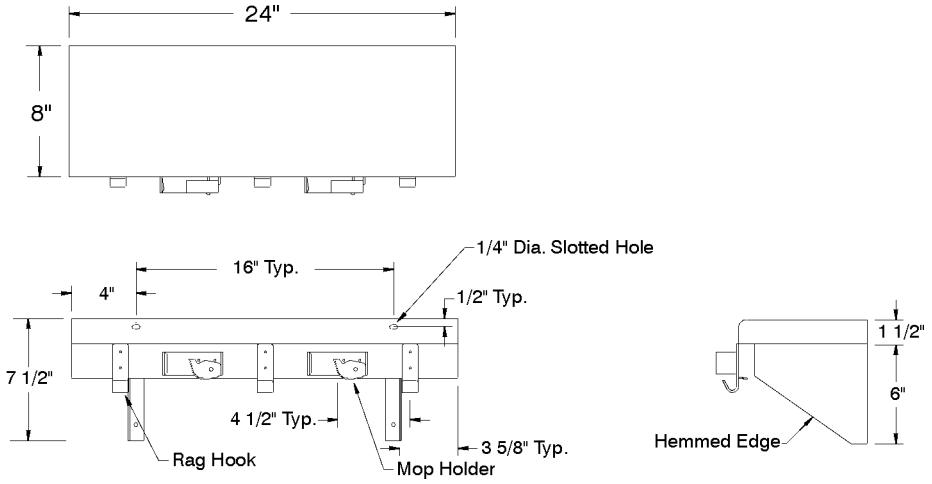

K-246

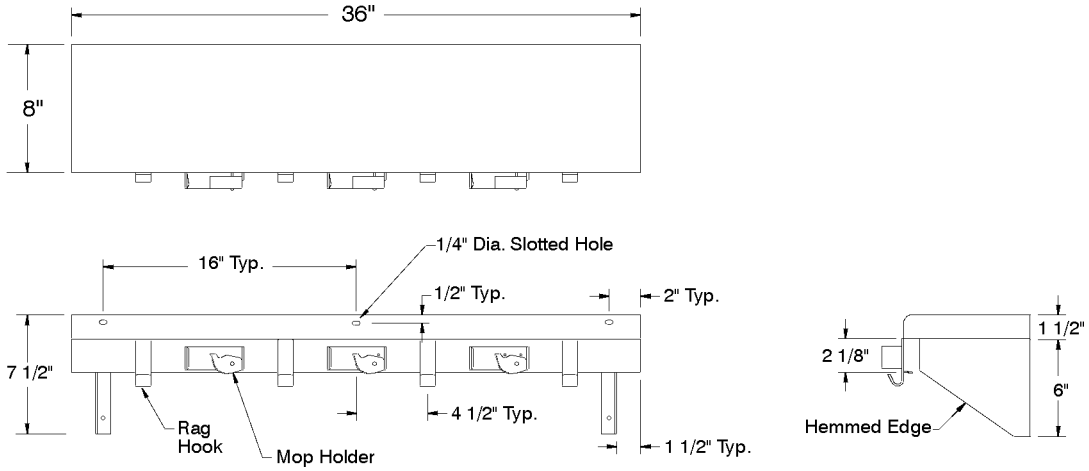

Rubbermaid®
Commercial Products

WaveBrake®
COMPLETE MOPPING SYSTEMS

Provided by Owner; Cutsheet provided for design intent

Crabtree McGrath Associates, Inc.

Fuller Middle School
Framingham, MA

Item #: 2
Quantity: 1

Complete Mopping Systems

WAVEBRAKE® MOPPING SYSTEMS

WaveBrake® can handle any mopping job with ease, in sizes from 26 quart to the new 44 quart system.

The famous patent-pending wave brake technology in every WaveBrake® bucket reduces splashing for a safer environment, cleaner floors, and more efficient mopping.

- CLEANER, EASIER MOPPING
- IMPROVED PRODUCTIVITY
- SAFER WORK ENVIRONMENT

See it in ACTION
www.rubbermaidwavebrake.com

PROMOTE SAFE WORK PRACTICES

WaveBrake's® innovative bucket shape with patent-pending molded-in wave brakes reduces splashing up to 40% for safer mopping.

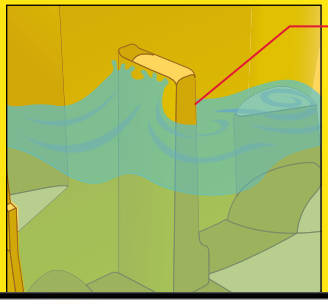

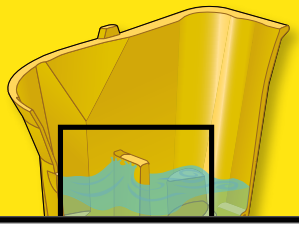

DID YOU KNOW?

Slip, trip, and fall accidents cost U.S. businesses over $100,000 (avg.) per lawsuit annually.

Source: Nat'l Floor Safety Institute (NFSI Database)

PROTECT WORKER WELL-BEING

The WaveBrake® 44 Qt Mopping Combo includes an innovative foot pedal water release mechanism that helps reduce

Crabtree McGrath Associates, Inc.

Fuller Middle School
Framingham, MA

Item #: 2
Quantity: 1

Rubbermaid®
Commercial Products

WAVEBRAKE® 26 QT MOPPING SYSTEM

WaveBrake® performance in a compact size.

- Works with all Rubbermaid Cleaning Carts
- Premium tubular steel and structural web molded plastic
- Full-size Side Press Wringer accepts all mop sizes*

7480-18

*Does not accept 9C74 Dirty Water Bucket.

SIDE PRESS WRINGER

- Wring mops with 18% less effort
- Lasts over 58 times longer than comparable wringers*
- Wringer handle is made from premium tubular steel and has a contoured comfort grip
- Wringer body is made from structural web molded plastic

***Structural Web wringer is tested to exceed 50,000 wringing cycles. Average injection molded wringers perform approximately 860 cycles.**

TANDEM™ 31 QT BUCKET AND WRINGER COMBO

All-in-one compact design means no more lost parts.

- One-piece design with integrated bucket and wringer*
- Built-in lift handles on bottom of bucket make lifting and emptying easy
- Works with all Rubbermaid Cleaning Carts
- Accepts up to 24 oz mops

DOWN PRESS WRINGER

- Efficiently presses water down into bucket
- Wringer body is made from structural web molded plastic
- Wringing system preferred by floor techs

*Do

Crabtree McGrath Associates, Inc.

Fuller Middle School
Framingham, MA

Item #: 2
Quantity: 1

Smarter Mopping

6186-88

7570-88

7780

7571-88

7680

6127-88

7580-88

7575-88

7480-18

9C74

7380

9C73*

WAVEBRAKE® 44 QT MOPPING COMBOS

No.	Description	Dimensions	Capacity	Ship Wt	Color	Pack
6186-88	44 Qt WaveBrake® Side Press Combo	26⅓" l x 18⅛" w x 38⅛" h	44 qt	23.7 lbs	YEL	1
7576-88	44 Qt WaveBrake® Down Press Combo	26¾" l x 18⅛" w x 38¾" h	44 qt	24.4 lbs	YEL	1

WAVEBRAKE® 35 QT MOPPING TROLLEYS

No.	Description	Dimensions	Capacity	Ship Wt	Color	Pack
7780	35 Qt WaveBrake® Mopping Trolley Side Press	28⅞" l x 18¼" w x 38⅝" h	35 qt	38 lb	YEL	1
7777	35 Qt WaveBrake® Mopping Trolley Down Press	28⅞" l x 18¼" w x 38⅝" h	35 qt	41.1 lb	YEL, RED, BLUE, GRN	1

WAVEBRAKE® 35 QT DUAL WATER MOPPING COMBOS

No.	Description	Dimensions	Capacity	Ship Wt	Color	Pack
7680	35 Qt WaveBrake® Dual Water Side Press Combo	22⅜" l x 16½" w x 38⅝" h	35 qt	25.5 lb	YEL	1
7677	35 Qt WaveBrake® Dual Water Down Press Combo	22⅜" l x 16½" w x 38⅝" h	35 qt	27.4 lb	YEL	1

WAVEBRAKE® 35 QT MOPPING COMBOS

No.	Description	Dimensions	Capacity	Ship Wt	Color	Pack
7580-88	35 Qt WaveBrake® Side Press Combo	20⅛" l x 15¾" w x 36½" h	35 qt	19.5 lb	YEL, BRN	1
7577-88	35 Qt WaveBrake® Down Press Combo	20⅛" l x 15¾" w x 36½" h	35 qt	21.2 lb	YEL, BRN	1
7588-88	35 Qt WaveBrake® Side Press Combo	20⅛" l x 15¾" w x 36½" h	35 qt	19.5 lb	RED, GRN, BLUE	1
7578-88	35 Qt WaveBrake® Down Press Combo	20⅛" l x 15¾" w x 36½" h	35 qt	21.2 lb	RED, GRN, BLUE	1
7590-88	35 Qt WaveBrake® Institutional Combo	18⅝" l x 15⅞" w x 24¾" h	35 qt	14.2 lb	YEL	1

WAVEBRAKE® BUCKETS

No.	Description	Dimensions	Capacity	Ship Wt	Color	Pack
7470	Bucket with Caster Kit	18.6" l x 15.9" w x 16.7" h	26 qt	37.1 lb	YEL	4
7570-88	Bucket with Caster Kit	20.1" l x 16" w x 17.4" h	35 qt	40.1 lb	BLUE[A], BRN, GRN[A], RED[A], YEL	4
7571-88	Bucket no Casters	20.1" l x 16" w x 16" h	35 qt	35.6 lb	YEL, RED, GRN, BLUE	4

[A] Requires 4 weeks lead time and are non-returnable.

WAVEBRAKE® WRINGERS

No.	Description	Dimensions	Mop Capacity	Ship Wt	Color	Pack
6127-88*	Side Press Wringer for WaveBrake®	13" l x 13" w x 27" h	12-32 oz	19.5 lb	BLUE[A], BRN, GRN[A], RED[A], YEL	2
7575-88†	Down Press Wringer for WaveBrake®	13.5" l x 13.2" w x 27" h	16-32 oz	22.1 lb	YEL, RED, GRN, BLUE	2

[A] Requires 4 weeks lead time and are non-returnable.
* Fits 7570, 7571, & 7470 WaveBrake® Buckets
† Fits 7570 & 7571 WaveBrake® Buckets

WAVEBRAKE® ACCESSORIES

No.	Description	Dimensions	Capacity	Ship Wt	Color	Pack
9C74	Dirty Water Bucket for WaveBrake®	14.1" l x 9.9" w x 14.1" h	18 qt	17 lb	RED, YEL	6
9C73	Quiet Caster Dolly*	22.4" l x 16.5" w x 6.2" h	N/A	10.1 lb	BLA	1

* For use with 35 Qt WaveBrake® Systems only.

WAVEBRAKE® 26 QT MOPPING COMBO

No.	Description	Dimensions	Capacity	Ship Wt	Color	Pack
7480-18[B]	26 Qt WaveBrake® Side Press Combo	18⅝" l x 15⅝" w x 16¾" h	26 Qt	23.7 lbs	YEL	12 Pcs/ 1 Pallet

[B]Pallet Pack

TANDEM™ 31 QT BUCKET & WRINGER COMBO

No.	Description	Dimensions	Capacity	Ship Wt	Color	Pack
7380	31 Qt Tandem™ Bucket & Wringer Combo	22⅝" l x 13¼" w x 32¼" h	31 qt	11.8 lb	YEL	1

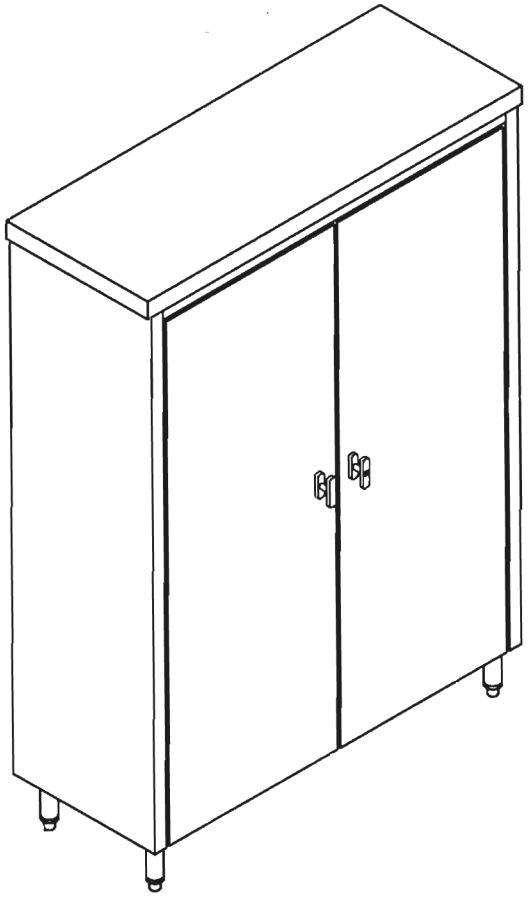

CUSTOM FABRICATED FOODSERVICE EQUIPMENT

DESCRIPTION: **Detergent storage cabinet**

36" x 18" x 72" high

NO CUT SHEET AVAILABLE

CONSTRUCTION FEATURES:

16 gauge stainless steel top with edges turned down
18 gauge stainless steel cabinet body
Fixed bottom shelf
Three adjustable intermediate shelves
63" high double pan hinged doors at front
Mount on 6" high stainless steel adjustable legs
Two (2) three point "T" handles, one locking
Barrel bolts mounted to inside top and bottom of door

tennsco®
Storage Made Easy

Provided by GC; Cutsheet provided for design intent

Welded and Unassembled Lockers

1. **Heavy-Duty Frame and Door**
   Welded frame and door is constructed of 16-gauge steel for added rigidity.
2. **Door Stiffeners***
   Steel door reinforcements add rigidity and dampen noise.
3. **Locking Bar***
   Steel locking bar offers strength, while spring actuated latches provide secure and quiet latch operation.
4. **Double Leaf Five-Knuckle Hinge**
   Extra-strong five-knuckle hinge with secured pin offers security, easy operation and long life.
5. **Available Welded**
   Electric resistance welded housing for added strength and cleaner appearance.
6. **Available Unassembled**
   Knock down version saves on shipping costs.
7. **Recessed Handle***
   Inset handle design allows padlocks to be recessed rather than protruding into aisles, increasing vandal-resistance.
8. **Shelf Design**
   Triple bend on front flange for added safety.
9. **Hat Shelf***
   Handy shelf for personal storage of hats, gloves, toiletries, books, etc. Available on Single Tier Lockers only.
10. **Louvers**
    Full width, contemporary styled louvers at top and bottom. Number of louvers increase with door width for improved ventilation of larger locker sizes.
11. **Rubber Bumpers**
    Door closing noise is effectively dampened with carefully placed bumpers.
12. **Choice of Leg Options**
    Lockers available with or without legs. Optional front- and end-bases available to enclose base. Use a closed base for lockers without legs.
13. **Durable Finish & Large Color Selection**
    Tough, powder-coated finish keeps its good looks for years. Colors are available to complement any setting.

Crabtree McGrath Associates, Inc.

Fuller Middle School
Framingham, MA

Item #: 2
Quantity: 3

DOUBLE TIER LOCKERS

Double Tier Lockers feature two openings per locker, giving you twice as many lockers in the same space as single tier, yet providing plenty of hanging room for shirts and jackets. Perfect for the gym.

- Opening widths of 12" or 15"*
- Locker depths of 12", 15" or 18"*
- Available in single or three-wide units
- Available welded or unassembled
- Three coat hooks per opening
- Positive 2 point locking system on doors
- Available with or without legs
- Three wide units with legs use four rear legs for support
- Flush louvers for ventilation
- Door stiffeners add rigidity
- Doors available in a variety of styles including standard, ventilated and C-Thru
- Optional locks and other accessories available, refer to pages 26-30

*Refer to price list for specific combinations.

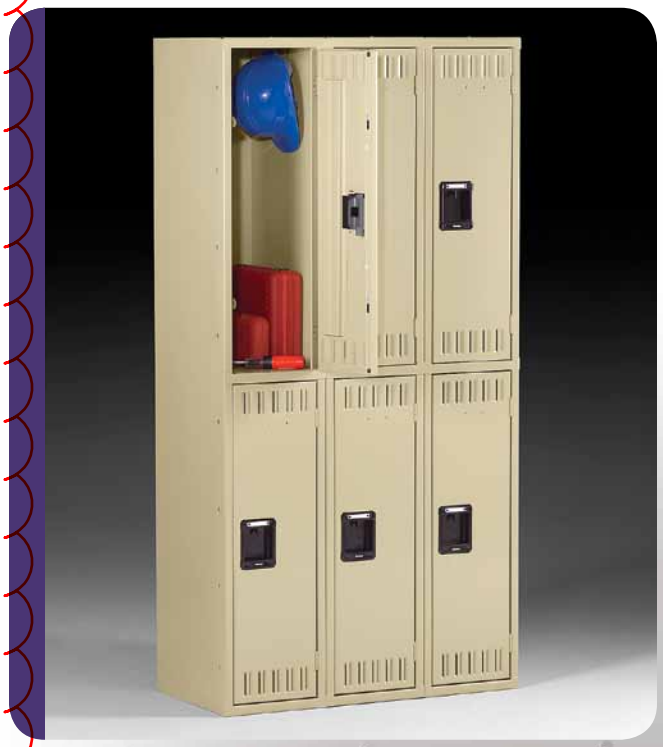

Crabtree McGrath Associates, Inc.

Fuller Middle School
Framingham, MA

Item #: 2
Quantity: 3

All Tennsco Steel Lockers are electrostatically painted with a tough, long lasting powder finish to ensure years of lasting beauty. Choose from five standard finishes.

Standard Locker Colors

Sand (214)	Champagne/ Putty (216)	Light Grey (53)	Medium Grey (2)	Black (3)

Premium Locker Colors

Accent Blue (10)	Arctic White (61)	Wine (118)	Dove Grey (74)	Oyster (470)	Green (21)

Cubby Colors

Black (3)	Arctic White (61)	Estey Blue (1032)	Safety Yellow (943)	Crimson (1034)	Evergreen (1033)

Standard Colors are available at no additional charge. Premium and Special Matched Colors are available for an upcharge. Finishes shown above are representative of the actual finishes. Please contact your local Tennsco dealer for more precise color swatches.

A WORD ABOUT TENNSCO

Tennsco Corp., headquartered in Dickson, Tennessee, began operations in 1962. Today, Tennsco is an industry leader with over 1.6 million square feet in eight facilities. Tennsco offers a wide variety of storage and filing systems, steel office furniture, industrial and institutional shelving, lockers and shop equipment.

ENVIRONMENTALLY FRIENDLY PRODUCTS

Tennsco steel products are certified SCS Indoor Advantage Gold for indoor air quality and low VOC emissions.

SCScertified™ INDOOR AIR QUALITY Indoor Advantage | Furniture GOLD

Tennsco products allow our customers to apply for LEED™ credits as described below:

a. MR Credit 4.1 and 4.2 – Recycled Content
b. MR Credit 5.1 – Manufactured Regionally
c. MR Credit 5.2 – Extracted and Manufactured Regionally
d. EQ Credit 4.2 – Low Emitting Materials, Paints

tennsco® Storage Made Easy

Mailing Address: P.O. Box 1888, Dickson, TN 37056-1888 **Shipping Address:** 201 Tennsco Drive, Dickson, TN 37055

Quality you can depend on...

from the inside out.™

Crabtree McGrath Associates, Inc.

Fuller Middle School
Framingham, MA

Item #: 08
Quantity: 1

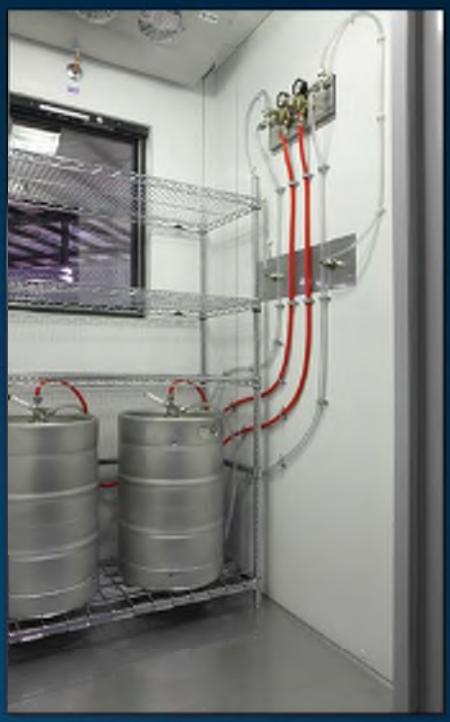

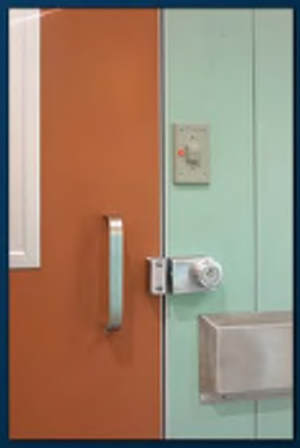

Crabtree McGrath Associates, Inc.

Fuller Middle School

Framingham, MA

Item #: 08

Quantity: 1

For half of a century American Panel Corporation has been dedicated to satisfying the cold storage needs of the industry's most demanding customers. Our attention to superior quality, product versatility and customer service remains unequaled today. Ever poised for an even deeper commitment to our industry - we are committed to the continuing development of state-of-the-art foamed-in-place walk-in coolers and freezers.

High Efficiency

Our foamed-in-place urethane is the ultimate insulating material currently available for walk-in construction. Operating costs are significantly reduced as a result of the high insulating values of panels manufactured with urethane insulation. Other desirable properties include structural rigidity, dimensional stability, uniform density and compliance with nationally accepted building codes.

Cam Lock & Floor Screed

Outstanding Value

Considering the thoughtful design, efficient manufacturaing process, skilled craftsmanship, advanced features and customer support, you simply cannot find a better walk-in value than American Panel.

Lasting Durability

Space age materials like our fiberglass reinforced polymer (FRP) door perimeter and frame are used to protect your investment for years to come. This FRP is a corrosion proof, impact resistant, non-conductive material that will not absorb moisture. Moreover, it is superior to steel, vinyl, wood or other commonly used door and frame materials.

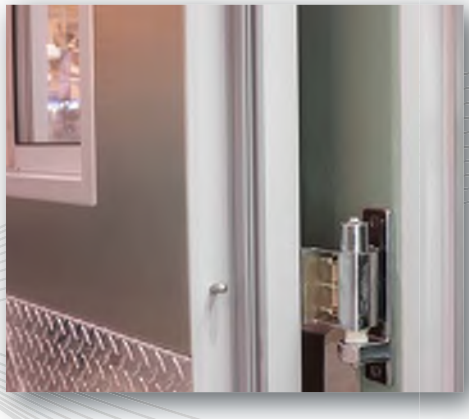

Reliable Performance

Choose from our complete selection of high performance refrigeration equipment and accessories for the most efficient and reliable installation possible. Our quality-engineered remote, remote quick connect, pre-assembled remote or top/side quick connect self-contained units are available for any indoor or outdoor application.

Insulation

American Panel insulated panels are 4" thick high pressure impingement mixed (HPIM), foamed-in-place urethane

Exceptional Appearance

Top quality commercial hardware, premium grade metal finishes and attention to manufacturing detail contribute to the overall appearance of the finished product. Whether used indoor or outdoor, for display purposes or general kitchen applications, American Panel walk-ins are always aesthetically pleasing.

Superior Strength

Optional heavy duty flooring is also available. This heavy-duty structural flooring can support up to 15,000 pounds per square foot (static load) as tested in accordance with ASTM Standards.

Ultimate Flexibility

Every American Panel walk-in is equipped with a full complement of standard accessories designed to meet the needs of a broad range of end users. However, depending on your particular requirements, you may wish to include additional options and features. We can provide every item for even the most sophisticated of applications.

Consistent Quality

Ours is perhaps the most thoroughly scrutinized production process in the industry. Our dedication to zero defect manufacturing and product

Crabtree McGrath Associates, Inc.

Fuller Middle School
Framingham, MA

Item #: 08
Quantity: 1

State of the Art Machinery

State of the art machinery allows for the highest degree of precision. In the picture above, a worker uses an automated punch press to create the outer skin for a wall panel. Each piece of sheet metal is programmed by an engineer and then fed to the machinery on the factory floor.

At right, a worker uses a highly accurate computer controlled bend press to form the double 90° bends. These bends will form the perimeter of the panel and help to hold the metal to the foam within the panel. They also serve as an anchor point for the tear-drop gasket that forms the airtight seal on the walk-in.

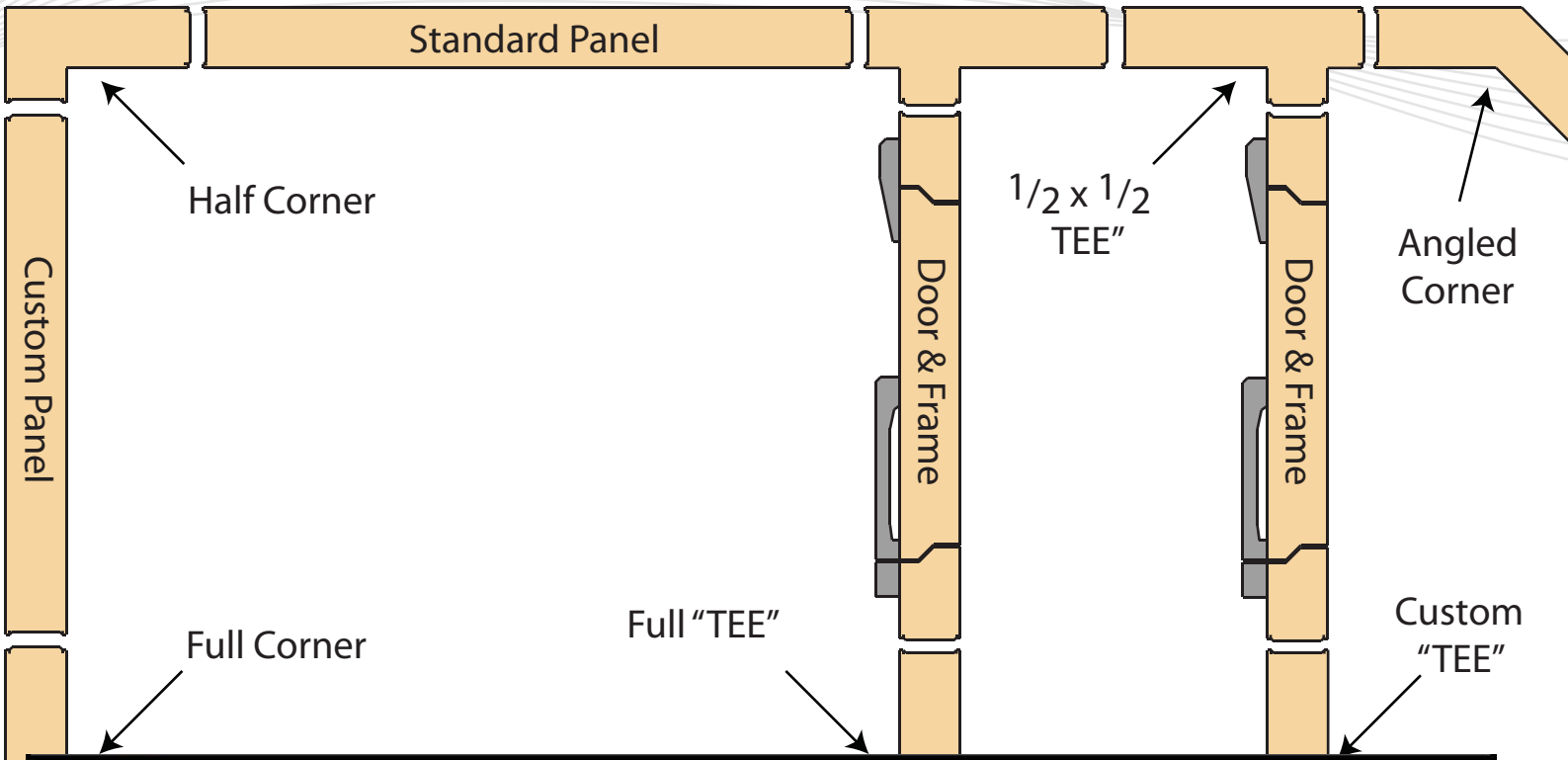

Crabtree McGrath Associates, Inc.

Fuller Middle School
Framingham, MA

Item #: 08
Quantity: 1

Functional Design

Virtually any cold storage requirement can be met using American Panel walk-ins. Restaurants, hospitality, correctional, healthcare, scientific, industrial, educational and large venues all have highly specialized needs. Rather than over-sell or under-sell our desire is to provide equipment that exactly matches the job at hand. Experienced sales and engineering personnel are at your disposal to assist in the design of your next project no matter how large or small the project or specialized the application.

Monitoring Systems

Along with our high-tech manufacturing processes American Panel is on the cutting edge with the proprietary System 100 monitoring system that comes standard on every room. High and low alarm set points coupled with an audio/visual alert ensure your food product is safe and sound.

Additional options and systems are available to add features like battery backups, multi-compartment monitoring, PC connections and much, much more.

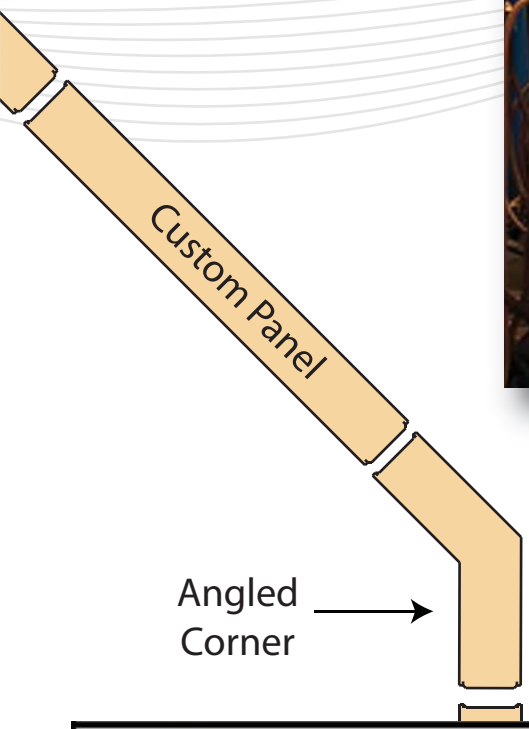

Modular Design Flexibility

Our modular panel system is the most comprehensive in existence, giving you the greatest degree of design flexibility possible. The system has evolved out of an industry-wide need for a more versatile array of standard panel sizes to maximize the amount of cold storage space.

The standard overall height for walk-ins with floors is 7′-6″. Additional

Bally®

SmartVap II®

Electronically Controlled System

THE ULTIMATE ELECTRIC DEFROST UNIT COOLER
2 PIPES + 2 WIRES = SIMPLE

Crabtree McGrath Associates, Inc.

Fuller Middle School
Framingham, MA

Item #: 08a
Quantity: 1

SmartVap II
Defrost Units

IT'S SMART
- Electronically Controls:
- Box Temperature
- Defrost Initiation
- Defrost Termination
- Fan Delay

IT'S SIMPLE
- 2 Pipes, 2 Wires, It's Done!
- Eliminates wiring back to condensing unit
- Factory Pre-set to suit most applications
- Simple user interface

EVAPORATOR INCLUDES FACTORY INSTALLED:
- Selected Nozzle
- Thermostatic Expansion Valve
- Solenoid Valve
- Disconnect Switch (optional)

Bally has taken the concept of electronic controls and made it simple. SmartVap II™ is a simple control located in the evaporator that controls box temperature and all aspects of the electric defrost.

By eliminating the time clock and heater contactor usually located in the condensing unit, the SmartVap II™ makes wiring the refrigeration system a breeze.

PLUS

As an electronic controller, SmartVap II™ allows for more accurate temperature control in the box.

SmartVap II™ is field adjustable for unique applications, and has a user lock option that will prevent unauthorized adjustments to settings.

SmartVap II™ Controller replaces these components:

Time Clock

Room Thermostat

Defrost Heater Contactor

Defrost Heater Fusing

Defrost Termination/
Fan Delay Thermostat

Crabtree McGrath Associates, Inc.

Fuller Middle School
Framingham, MA

Item #: 08a
Quantity: 1

BQ-Line Quiet
Condensing Units

- 1 - 6 HP HIGH/MED. TEMP (0°F - +40°F SST) R404A/R407C
- 1 - 6 HP LOW TEMP (-40°F - 0°F) R404A
- LOW AMBIENT OPERATION (AS LOW AS -35°F)
- 208-230/1/60, 208-230/3/60, 460/3/60

TESTING RESULTS SHOW...

- Sound levels are approx 15 dBA lower than conventional style condensing units at 70°F (full speed)
- Sound levels are approx 20 dBA lower than conventional condensing units below 70°F (lower speed)
- Save up to 25% on energy costs*
- Head pressure and stable liquid temperature to the TXV maintained to ensure optimal TXV performances

DESIGN HIGHLIGHTS

- Quiet Operation
- High Efficiency
- Compact Design
- Minimal Product Footprint
- Optional Wall Mounting Kit
- Copeland or Tecumseh Compressors
- Scroll and Hermetic Compressor Models Available

VARIABLE SPEED EC MOTORS (STANDARD) PROVIDE...

- Energy Savings Through Speed Reduction
- Reduced Sound Levels
- Low Refrigerant Charge Due To No Flooding Valve

* Dependent upon numerous factors, please refer to product documentation for complete details

Crabtree McGrath Associates, Inc.

Fuller Middle School
Framingham, MA

Item #: 08a
Quantity: 1

Bally®

QUIETUNIT

REFRIGERATION DUTY CONDENSING UNITS

SCROLL COMPRESSORS

ENERGY EFFICIENT

COMPACT

AWARD WINNING

Crabtree McGrath Associates, Inc.

Fuller Middle School
Framingham, MA

Item #: 08b
Quantity: 1

BQ-Line Quiet
Condensing Units

DESIGN HIGHLIGHTS

- Quiet Operation
- High Efficiency
- Compact Design
- Minimal Product Footprint
- Optional Wall Mounting Kit
- Copeland Scroll Compressors

AWARD WINNING

- 1 - 6 HP high/med. Temp (0°F - +40°F SST) R407A/R407C
- 1 - 6 HP low temp (-40°F - 0°F) R404A
- Low ambient operation (as low as -35°F)
- 208-230/1/60, 208-230/3/60, 460/3/60

TESTING RESULTS SHOW...

- Sound levels are approx 15 dBA lower than conventional style condensing units at 70°F (full speed)
- Sound levels are approx 20 dBA lower than conventional condensing units below 70°F (lower speed)
- Save up to 25% on energy costs*
- Head pressure and stable liquid temperature to the TXV maintained to ensure optimal TXV performances

VARIABLE SPEED EC MOTORS (STANDARD) PROVIDE...

- Energy Savings Through Speed Reduction
- Reduced Sound Levels
- Low Refrigerant Charge Due To No Flooding Valve

How Quiet is the Bally Quiet Unit?

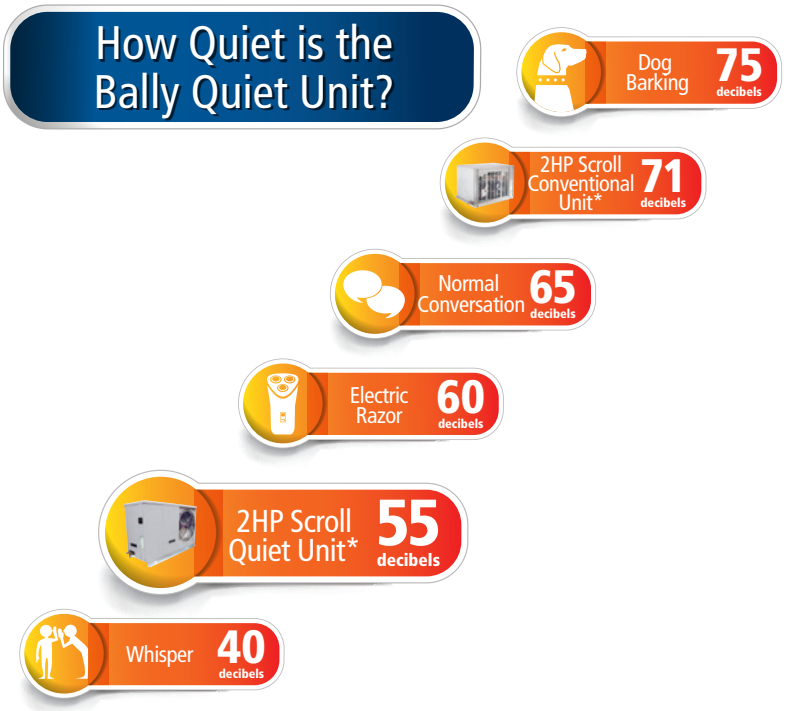

* Dependent upon numerous factors, please refer to product documentation for complete details

CHECK OUT OUR VIDEOS

Watch our video to learn more about the versatility and convenience of Bally's Quiet Unit.

Scan the QR Code with your smartphone.

Or visit: **b-rp.ca/quietunit**

Crabtree McGrath Associates, Inc.

Fuller Middle School
Framingham, MA

Item #: 08b
Quantity: 1

Quality you can depend on...

from the inside out.™

Crabtree McGrath Associates, Inc.

Fuller Middle School
Framingham, MA

Item #: 09
Quantity: 1

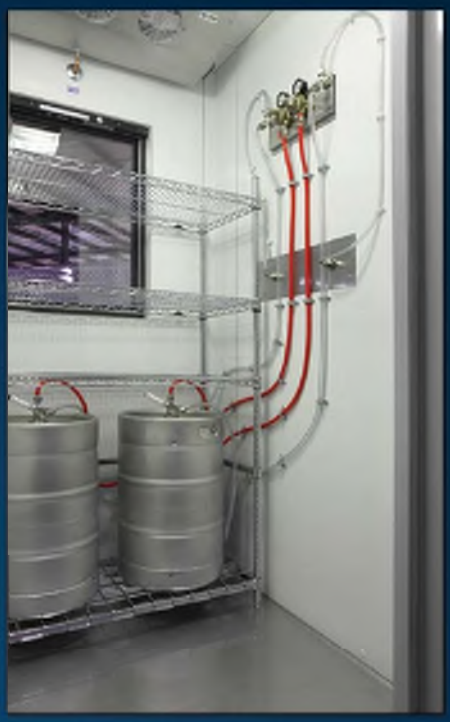

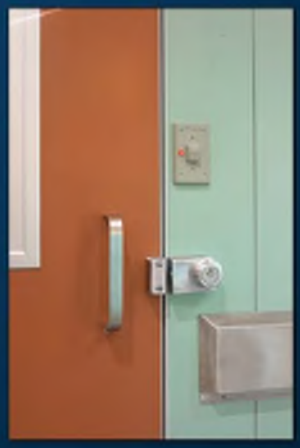

Crabtree McGrath Associates, Inc.

Fuller Middle School

Framingham, MA

Item #: 09

Quantity: 1

For half of a century American Panel Corporation has been dedicated to satisfying the cold storage needs of the industry's most demanding customers. Our attention to superior quality, product versatility and customer service remains unequaled today. Ever poised for an even deeper commitment to our industry - we are committed to the continuing development of state-of-the-art foamed-in-place walk-in coolers and freezers.

High Efficiency

Our foamed-in-place urethane is the ultimate insulating material currently available for walk-in construction. Operating costs are significantly reduced as a result of the high insulating values of panels manufactured with urethane insulation. Other desirable properties include structural rigidity, dimensional stability, uniform density and compliance with nationally accepted building codes.

Cam Lock & Floor Screed

Outstanding Value

Considering the thoughtful design, efficient manufacturaing process, skilled craftsmanship, advanced features and customer support, you simply cannot find a better walk-in value than American Panel.

Lasting Durability

Space age materials like our fiberglass reinforced polymer (FRP) door perimeter and frame are used to protect your investment for years to come. This FRP is a corrosion proof, impact resistant, non-conductive material that will not absorb moisture. Moreover, it is superior to steel, vinyl, wood or other commonly used door and frame materials.

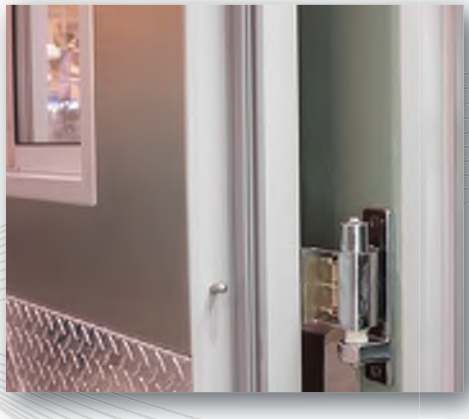

Reliable Performance

Choose from our complete selection of high performance refrigeration equipment and accessories for the most efficient and reliable installation possible. Our quality-engineered remote, remote quick connect, pre-assembled remote or top/side quick connect self-contained units are available for any indoor or outdoor application.

Insulation

American Panel insulated panels are 4" thick high pressure impingement mixed (HPIM), foamed-in-place urethane

Exceptional Appearance

Top quality commercial hardware, premium grade metal finishes and attention to manufacturing detail contribute to the overall appearance of the finished product. Whether used indoor or outdoor, for display purposes or general kitchen applications, American Panel walk-ins are always aesthetically pleasing.

Superior Strength

Optional heavy duty flooring is also available. This heavy-duty structural flooring can support up to 15,000 pounds per square foot (static load) as tested in accordance with ASTM Standards.

Ultimate Flexibility

Every American Panel walk-in is equipped with a full complement of standard accessories designed to meet the needs of a broad range of end users. However, depending on your particular requirements, you may wish to include additional options and features. We can provide every item for even the most sophisticated of applications.

Consistent Quality

Ours is perhaps the most thoroughly scrutinized production process in the industry. Our dedication to zero defect manufacturing and product

Crabtree McGrath Associates, Inc.

Fuller Middle School
Framingham, MA

Item #: 09
Quantity: 1

State of the Art Machinery

State of the art machinery allows for the highest degree of precision. In the picture above, a worker uses an automated punch press to create the outer skin for a wall panel. Each piece of sheet metal is programmed by an engineer and then fed to the machinery on the factory floor.

At right, a worker uses a highly accurate computer controlled bend press to form the double 90° bends. These bends will form the perimeter of the panel and help to hold the metal to the foam within the panel. They also serve as an anchor point for the tear-drop gasket that forms the airtight seal on the walk-in.

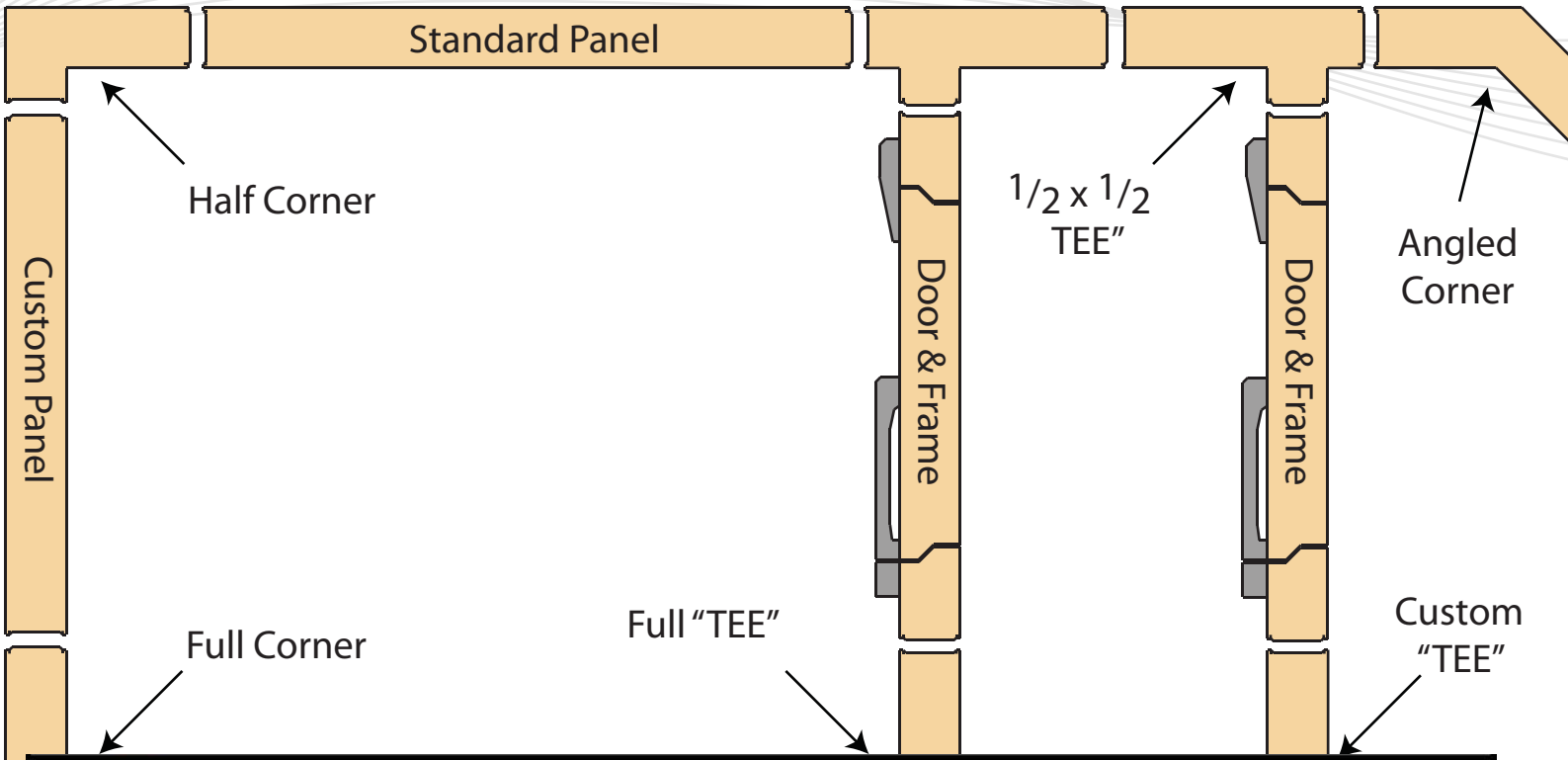

Crabtree McGrath Associates, Inc.

Fuller Middle School
Framingham, MA

Item #: 09
Quantity: 1

Functional Design

Virtually any cold storage requirement can be met using American Panel walk-ins. Restaurants, hospitality, correctional, healthcare, scientific, industrial, educational and large venues all have highly specialized needs. Rather than over-sell or under-sell our desire is to provide equipment that exactly matches the job at hand. Experienced sales and engineering personnel are at your disposal to assist in the design of your next project no matter how large or small the project or specialized the application.

Monitoring Systems

Along with our high-tech manufacturing processes American Panel is on the cutting edge with the proprietary System 100 monitoring system that comes standard on every room. High and low alarm set points coupled with an audio/visual alert ensure your food product is safe and sound.

Additional options and systems are available to add features like battery backups, multi-compartment monitoring, PC connections and much, much more.

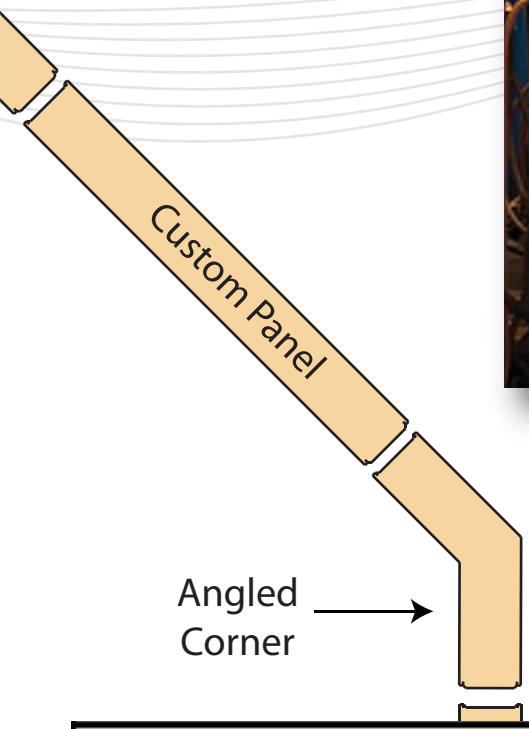

Modular Design Flexibility

Our modular panel system is the most comprehensive in existence, giving you the greatest degree of design flexibility possible. The system has evolved out of an industry-wide need for a more versatile array of standard panel sizes to maximize the amount of cold storage space.

The standard overall height for walk-ins with floors is 7′-6″. Additional

Bally®

SmartVap II®

Electronically Controlled System

THE ULTIMATE ELECTRIC DEFROST UNIT COOLER
2 PIPES + 2 WIRES = SIMPLE

Crabtree McGrath Associates, Inc.

Fuller Middle School
Framingham, MA

Item #: 09a
Quantity: 1

SmartVap II
Defrost Units

IT'S SMART
- Electronically Controls:
- Box Temperature
- Defrost Initiation
- Defrost Termination
- Fan Delay

IT'S SIMPLE
- 2 Pipes, 2 Wires, It's Done!
- Eliminates wiring back to condensing unit
- Factory Pre-set to suit most applications
- Simple user interface

EVAPORATOR INCLUDES FACTORY INSTALLED:
- Selected Nozzle
- Thermostatic Expansion Valve
- Solenoid Valve
- Disconnect Switch (optional)

Bally has taken the concept of electronic controls and made it simple. SmartVap II™ is a simple control located in the evaporator that controls box temperature and all aspects of the electric defrost.

By eliminating the time clock and heater contactor usually located in the condensing unit, the SmartVap II™ makes wiring the refrigeration system a breeze.

PLUS

As an electronic controller, SmartVap II™ allows for more accurate temperature control in the box.

SmartVap II™ is field adjustable for unique applications, and has a user lock option that will prevent unauthorized adjustments to settings.

SmartVap II™ Controller replaces these components:

Time Clock

Room Thermostat

Defrost Heater Contactor

Defrost Heater Fusing

Defrost Termination/
Fan Delay Thermostat

Crabtree McGrath Associates, Inc.

Fuller Middle School
Framingham, MA

Item #: 09a
Quantity: 1

BQ-Line Quiet
Condensing Units

- 1 - 6 HP HIGH/MED. TEMP (0°F - +40°F SST) R404A/R407C
- 1 - 6 HP LOW TEMP (-40°F - 0°F) R404A
- LOW AMBIENT OPERATION (AS LOW AS -35°F)
- 208-230/1/60, 208-230/3/60, 460/3/60

TESTING RESULTS SHOW...

- Sound levels are approx 15 dBA lower than conventional style condensing units at 70°F (full speed)
- Sound levels are approx 20 dBA lower than conventional condensing units below 70°F (lower speed)
- Save up to 25% on energy costs*
- Head pressure and stable liquid temperature to the TXV maintained to ensure optimal TXV performances

DESIGN HIGHLIGHTS

- Quiet Operation
- High Efficiency
- Compact Design
- Minimal Product Footprint
- Optional Wall Mounting Kit
- Copeland or Tecumseh Compressors
- Scroll and Hermetic Compressor Models Available

VARIABLE SPEED EC MOTORS (STANDARD) PROVIDE...

- Energy Savings Through Speed Reduction
- Reduced Sound Levels
- Low Refrigerant Charge Due To No Flooding Valve

* Dependent upon numerous factors, please refer to product documentation for complete details

Crabtree McGrath Associates, Inc.

Fuller Middle School
Framingham, MA

Item #: 09a
Quantity: 1

Bally®

QUIETUNIT

REFRIGERATION DUTY CONDENSING UNITS

SCROLL COMPRESSORS

ENERGY EFFICIENT

COMPACT

AWARD WINNING

Crabtree McGrath Associates, Inc.

Fuller Middle School
Framingham, MA

Item #: 09b
Quantity: 1

BQ-Line Quiet
Condensing Units

DESIGN HIGHLIGHTS

- Quiet Operation
- High Efficiency
- Compact Design
- Minimal Product Footprint
- Optional Wall Mounting Kit
- Copeland Scroll Compressors

AWARD WINNING

- 1 - 6 HP high/med. Temp (0°F - +40°F SST) R407A/R407C
- 1 - 6 HP low temp (-40°F - 0°F) R404A
- Low ambient operation (as low as -35°F)
- 208-230/1/60, 208-230/3/60, 460/3/60

TESTING RESULTS SHOW...

- Sound levels are approx 15 dBA lower than conventional style condensing units at 70°F (full speed)
- Sound levels are approx 20 dBA lower than conventional condensing units below 70°F (lower speed)
- Save up to 25% on energy costs*
- Head pressure and stable liquid temperature to the TXV maintained to ensure optimal TXV performances

VARIABLE SPEED EC MOTORS (STANDARD) PROVIDE...

- Energy Savings Through Speed Reduction
- Reduced Sound Levels
- Low Refrigerant Charge Due To No Flooding Valve

How Quiet is the Bally Quiet Unit?

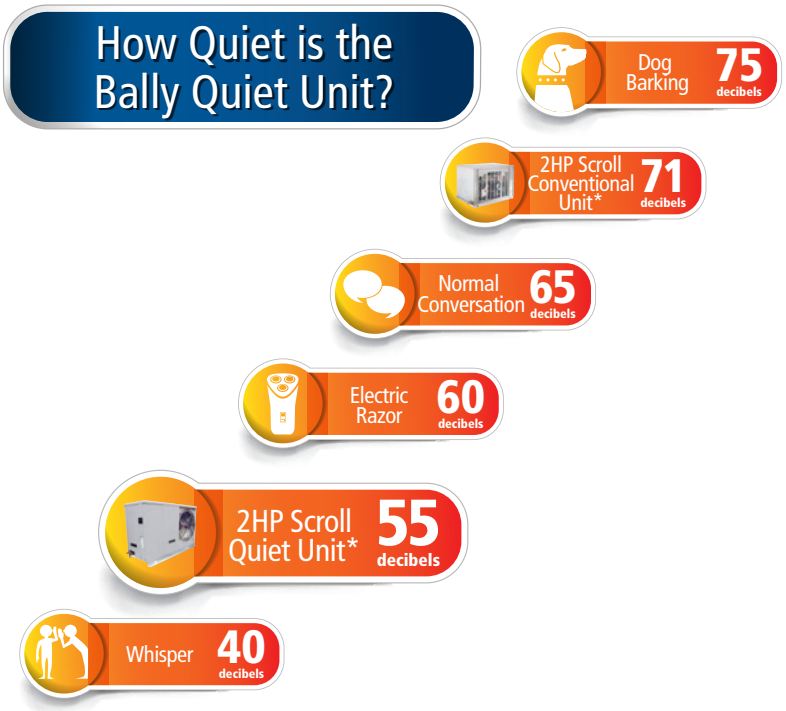

* Dependent upon numerous factors, please refer to product documentation for complete details

CHECK OUT OUR VIDEOS

Watch our video to learn more about the versatility and convenience of Bally's Quiet Unit.

Scan the QR Code with your smartphone.

Or visit: **b-rp.ca/quietunit**

Crabtree McGrath Associates, Inc.

Fuller Middle School
Framingham, MA

Item #: 09b
Quantity: 1

Item No. _____

Quantity_____

Job Name_____

Spec No. _____

Box Transport Truck

ALUMINUM CONSTRUCTION

Material:
Hi-tensile, corrosion resistant, rust proof, primary extruded aluminum, Type 663- T5 alloy.

Construction:
All heli-arc welded all sealed (no rivets).

Base:
Perimeter frame of 1-1/2" x 1-1/2" x .070 wall extruded aluminum tube with 1-1/2" x 1-1/2" laterals welded at 3-7/8" intervals.

Uprights:
1-1/2" x 1-1/2" x .070 wall extruded aluminum tube with horizontal braces of 1-1/2" x 1-1/2" wall extruded tubing and welded securely to the base.

Upper Shelf:
Frame length consists of 1-1/2" x 1-1/2" aluminum tube and frame width consists of 1-1/2" x 1-1/2" aluminum tube with 1-1/2" x 1-1/2" aluminum tube laterals welded to length of frame on 3-7/8" intervals.

Casters:
Four platform type 5" casters, two rigid and two swivel with brake... all with ball bearing axle, and non-marking wheel.

Mobile Dunnage Dolly

ALUMINUM CONSTRUCTION

Specifications:

- 5" X 1-1/4" heavy duty plate casters for extra strength
- 1200 lbs. distributed weight capacity

Options:
Corner Bumpers **/024**
Other Options Available

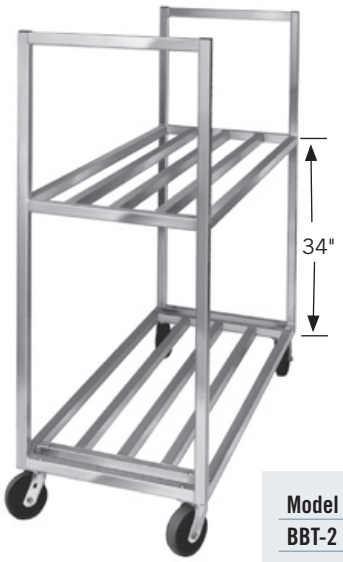

BBT-2

Model	H	W	D	Weight
BBT-2	67 1/2"	27"	60"	68

PER SPECIFICATIONS

NSF

Optional:
24" High Handle
(**/H24**)

MD2036CA/052

Optional:
5" x 2" HD Casters
(**/052**) 2000 lbs.
Weight Capacity

Model	H	W	L	Weight
MD2036CA	8"	36"	20"	31
MD2048CA	8"	48"	20"	33
MD2060CA	8"	60"	20"	36
MD2436CA	8"	36"	24"	32
MD2448CA	8"	48"	24"	34
MD2460CA	8"	60"	24"	37

SOLID TOP

Model	H	W	L	Weight
AD2428	8"	28"	24"	23
AD2433	8"	33"	24"	27
AD2440	8"	40"	24"	32

Custom Sizes Available

CHANNEL® MANUFACTURING, INC.

55 Channel Drive • Port Washington, NY11050-2216
8891 NW 102nd Street • Medley, FL 33178
Tel: 516-944-6271 • Fax: 516-944-0625 • Toll Free: 866-712-7283
www.channelmfg.com • Email: sales@channelmfg.com

Crabtree McGrath Associates, Inc.

Fuller Middle School
Framingham, MA

Item #: 10
Quantity: 6

InterMetro Industries Corporation
North Washington Street
Wilkes-Barre, PA 18705
www.metro.com

Four tier with 63" high posts on casters

METROMAX Q™ SHELVING

with *Microban Antimicrobial Product Protection

Part of the innovative MetroMax iQ™ Storage System, MetroMax Q™ is a longer life storage solution than conventional wire shelving. The product offers durable polymer mats that remove for easy cleaning and protect stored items from damage. Quick adjust shelves and MetroMax iQ accessories provides a very efficient use of storage space. MetroMax Q™ is integrated with online space planning tools and tutorials. **www.metro.com/iQ**

- **Longer-life performance:** Durable, corrosion proof polymer mats protect the shelves from normal wear and tear. Robust epoxy coated steel frames and posts hold as much weight as Metro's wire shelving. Weight capacity for evenly distributed loads:
  800 lbs. (363kg) per shelf for lengths of 24" to 48" (610 to 1220mm)
  600 lbs. (275kg) per shelf for lengths of 54" (1370mm) or longer
  2,000 lbs. (907kg) maximum per stationary unit.
- **Interchangeable:** MetroMax Q and MetroMax i™ shelves, posts, and most accessories are compatible on the same unit. Use MetroMax Q shelves with MetroMax i™ polymer posts for increased corrosion protection. Use MetroMax i™ solid shelves when spill containment is required or as a bottom shelf to protect supplies from dirt or backsplashes from mops.
- **Easier to clean and maintain:** Polymer mats can be easily removed and cleaned in a sink or dish machine. Microban antimicrobial product protection is built into the high contact areas of the shelf including the mats, frames, and posts to protect the product from bacteria, mold, mildew, and fungus that cause odors and product degradation. Microban protection keeps the product "cleaner between cleanings".
- **Quick to Adjust:** Patented corner release allows shelves to be unlocked without tools. Simply flip each corner release, relocate the wedge connectors on the posts, and reposition the shelf. Quickly adjust shelves to reclaim wasted vertical space.
- **Smooth, Protective Surfaces:** Smooth shelf mats protect packaged items from unwanted rips, tears, or damage.
- **Open Grid and Solid Mat Options:** MetroMax Q is available with open grid mats as standard. Open grid shelves promote air circulation and light penetration.
  MetroMax i™ solid shelves can be used with MetroMax Q grid shelves on the same unit and are available in 18" and 24" (457 and 610mm) depths. For 21" (530mm) deep MetroMax Q, solid mat overlays are available.
- **Efficient, Organized Storage:** Premium MetroMax iQ™ accessories efficiently organize, contain, and compartmentalize ***all*** space between shelves.
- **Quick to Assemble:** MetroMax Q assembles easily in minutes, without tools. Shelves can be adjusted at 1" (25mm) increments along the post. Shelf wedges have a window to locate your desired position.

MetroMax Q Mobile Unit

NSF

MetroMax Q with Accessories and MetoMax i Solid Bottom Shelf

*MICROBAN® and the MICROBAN® symbol are registered trademarks of the Microban Products Company, Huntersville, NC.

Crabtree McGrath Associates, Inc.

Fuller Middle School
Framingham, MA

Item #: 11
Quantity: 9

Specifications

- **Shelf frames and posts:** Steel with electroplated substrate and highly durable, abrasion-resistant epoxy finish. Epoxy finish has built-in Microban antimicrobial product protection. The adjustable foot is reinforced nylon.
- **Shelf Mats:** Injection molded polypropylene with exclusive built-in Microban® antimicrobial product protection.
- **Shelf Wedge Connector:** Reinforced nylon.
- **Temperature range:** -20°F (-29°C) to 125°F (52°C) continuous use, with intermittent exposure to 200°F (93°C) for cleaning.

Standard Interchangeable Shelves

- Part number includes shelf with removable mats and one bag of wedges.
- MetroMax Q grid shelves, MetroMax i™ grid and solid shelves are all compatible on the same unit.

Nominal Width (in.)	(mm)	Nominal Length (in.)	(mm)	MetroMax Q Shelf with Grid Mat Model No.	Approx. Pkd. Wt. (lbs.)	(kg)	MetroMax i™ Shelf with Solid Mat Model No.	Approx. Pkd. Wt. (lbs.)	(kg)
18	457	24	610	MQ1824G	6.2	2.8	MX1824F	12.7	5.8
18	457	30	760	MQ1830G	8.0	3.6	MX1830F	14.5	6.6
18	457	36	914	MQ1836G	9.7	4.4	MX1836F	17.2	7.8
18	457	42	1060	MQ1842G	11.4	5.2	MX1842F	20.1	9.1
18	457	48	1220	MQ1848G	13.2	6.0	MX1848F	23.1	10.5
18	457	54	1372	MQ1854G	15.0	6.8	MX1854F	21.5	9.7
18	457	60	1524	MQ1860G	16.7	7.6	MX1860F	23.2	10.5
18	457	72	1829	MQ1872G	20.0	9.1	MX1872F	27.5	12.5
21	530	24	610	MQ2124G	8.0	3.6	—		
21	530	30	760	MQ2130G	9.7	4.4	—		
21	530	36	914	MQ2136G	11.4	5.2	—		
21	530	42	1060	MQ2142G	12.8	5.8	—		
21	530	48	1220	MQ2148G	14.5	6.6	—		
21	530	54	1372	MQ2154G	16.7	7.6	—		
21	530	60	1524	MQ2160G	18.5	8.4	—		
21	530	72	1829	MQ2172G	21.7	9.9	—		
24	610	24	610	MQ2424G	9.7	4.4	MX2424F	14.2	6.4
24	610	30	760	MQ2430G	11.4	5.2	MX2430F	15.9	7.2
24	610	36	914	MQ2436G	13.1	6.0	MX2436F	19.6	8.9
24	610	42	1060	MQ2442G	14.1	6.4	MX2442F	21.5	9.8
24	610	48	1220	MQ2448G	15.8	7.1	MX2448F	25.3	11.5
24	610	54	1372	MQ2454G	18.5	8.4	MX2454F	25.0	11.3
24	610	60	1524	MQ2460G	20.3	9.2	MX2460F	26.8	12.1
24	610	72	1829	MQ2472G	23.5	10.7	MX2472F	31.0	14.1

Actual Dimensions:
Width: Add 3/8" (10mm) to nominal size.
Length: Subtract 3/16" (5mm) from nominal size.

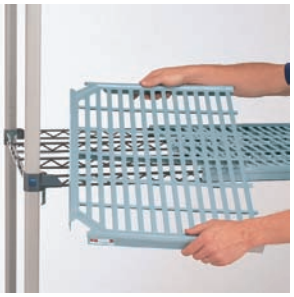

MetroMax Q Open Grid Shelf

MetroMax i™ Solid Shelf

Heavy-Duty Dunnage Shelves

- Corrosion proof MetroMax i™ dunnage shelf is compatible with MetroMax Q.
- Open grid and solid version available.
- Weight capacity per shelf evenly distributed: 1,200 lbs. (544kg) on shelves up to and including 48" (1220mm) long; 900 lbs. (408kg) for shelves 60" (1524mm) long.
- Dunnage shelves are recommended for use on units with four posts.

Nominal Width (in.)	(mm)	Nominal Length (in.)	(mm)	Shelf with Grid Mat Model No.	Approx. Pkd. Wt. (lbs.)	(kg)	Shelf with Solid Mat Model No.	Approx. Pkd. Wt. (lbs.)	(kg)
18	457	36	914	MHP1836G	18	8.2	MHP1836F	22	10.0
18	457	48	1220	MHP1848G	22	10.0	MHP1848F	26	11.8
18	457	60	1524	MHP1860G	26	11.8	MHP1860F	30	13.6

Solid Mat Overlays

- Overlays snap onto the open grid mats to create a solid surface.
- Available for 21" (530mm) deep MetroMax Q shelves.

Fits Shelf (in.)	(mm)	Model No.	Approx. Pkd. Wt. (lbs.)	(kg)
21x24	530x610	Q2124SM	0.35	0.16
21x30	530x760	Q2130SM	0.45	0.20
21x36	530x914	Q2136SM	0.50	0.23
21x42	530x1060	Q2142SM	0.60	0.27
21x48	530x1220	Q2148SM	0.70	0.32
21x54	530x1372	Q2154SM	0.80	0.36
21x60	530x1524	Q2160SM	0.90	0.41
21x72	530x1829	Q2172SM	1.00	0.45

METROMAX Q™
POLYMER AND STEEL SHELVING

Standard Interchangeable Posts

- MetroMax Q: Epoxy coated steel with Microban antimicrobial product protection.
- MetroMax i: Polymer with Microban antimicrobial product protection.
- Stationary posts include an adjustable leveling foot to compensate for uneven floors. Leveling foot can be adjusted 1" (25mm).
- When mounting a shelving unit to a dolly base, stationary posts are used.
- Special height cut posts are available. Consult your Metro representative.

MetroMax Q Steel Post

MetroMax i Polymer Post

STATIONARY POST WITH LEVELING FOOT

Nominal Height (in.)	(mm)	Actual Height* (in.)	(mm)	MetroMax Q Steel Model No.	Approx. Pkd. Wt. (lbs.)	(kg)	MetroMax i Polymer Model No.	Approx. Pkd. Wt. (lbs.)	(kg)
13	370	14 3/4	375	MQ13PE	1.0	0.5	MX13P	0.5	0.2
27	685	28 3/4	730	MQ27PE	2.0	0.9	MX27P	0.9	0.4
33	875	34 3/4	883	MQ33PE	2.5	1.1	MX33P	1.0	0.5
54	1370	54 3/4	1391	MQ54PE	4.0	1.8	MX54P	1.6	0.7
63	1585	62 3/4	1594	MQ63PE	4.5	2.0	MX63P	1.8	0.8
74	1690	74 3/4	1899	MQ74PE	5.5	2.5	MX74P	2.2	1.0
86	2195	86 3/4	2203	MQ86PE	6.5	2.9	MX86P	2.5	1.1

POST FOR STEM CASTER

Nominal Height (in.)	(mm)	Actual Height* (in.)	(mm)	MetroMax Q Steel Model No.	Approx. Pkd. Wt. (lbs.)	(kg)	MetroMax i Polymer Model No.	Approx. Pkd. Wt. (lbs.)	(kg)
13	370	13 3/4	349	MQ13UPE	1.0	0.5	MX13UP	0.5	0.2
27	685	27 3/4	705	MQ27UPE	2.0	0.9	MX27UP	0.9	0.4
33	875	33 3/4	857	MQ33UPE	2.5	1.1	MX33UP	1.0	0.5
54	1370	53 3/4	1365	MQ54UPE	4.0	1.8	MX54UP	1.6	0.7
63	1585	61 3/4	1568	MQ63UPE	4.5	2.0	MX63UP	1.8	0.8
70	1778	69 3/4	1765	MQ70UPE	5.0	2.3			
74	1690	73 3/4	1873	MQ74UPE	5.5	2.5	MX74UP	2.3	1.0
86	2195	85 3/4	2178	MQ86UPE	6.5	2.9	MX86UP	2.5	1.4

Replacement Leveling Foot:
Model No. RPM3-FOOT

Replacement Post Cap for Steel Post:
Model No. RPMQS-POSTCAP

Replacement Post Cap for Polymer Post:
Model No. RPMXS-POSTCAP

Replacement MetroMax Q Wedges
Model No. MQ9985 Bag of 4

Replacement MetroMax Q Wedges MQ9985

NOTE: Compatibility with existing Metro polymer mat shelving systems
- MQ9985 wedges are compatible with original MetroMax Q shelves and posts.
- The post centers on MetroMax Q have been changed to allow interchangeability with MetroMax i™ shelves. MetroMax Q shelves manufactured within or after April 2009 are not compatible with Q shelves made prior to April 2009.
- MetroMax Q is not compatible with original MetroMax manufactured prior to April 2009.
- Posts listed in above table (ex. MQ74PE, MX74PE) can be used with original MetroMax Q shelves made prior to April 2009.

Post Clamp

Adds stability by joining posts of two separate units together. With it, each unit is supported by four posts and buttressed by the adjacent unit.
Model No. 9994X

Foot Plate

Use to add stability to the shelving unit or to bolt units to the floor.
Model No. Zinc 9993Z
Model No. Stainless Steel 9993S

Stem Casters

A variety of stem casters are offered for MetroMax i™ mobile applications.
Stem caster models include bumpers.

Replacement Bumper M9992DBX

Crabtree McGrath Associates, Inc.

Fuller Middle School
Framingham, MA

Item #: 11
Quantity: 9

New Age Industrial Corp., Inc.
PO Box 520 • 16788 US Hwy 36 • Norton, Kansas 67654
Phone: 800-255-0104 • Fax: (877)-877-7687 • **www.NewAgeIndustrial.com**

Job: _____

Item: _____

Quantity: _____

Bun Pan Racks

Virtually Maintenance Free,

- All welded construction insures the maximum strength and stability of each rack.
- Shipped assembled for immediate use.
- Available in both end and side loading styles, to accommodate 18” x 26”, 13” x 18”, and 14” x 18” pans

Easy to Maneuver

- Equipped with four 5” heavy duty platform type casters.
- Non-marking wheels protect floors and minimize noise.
- Caster plates are securely welded to the frame of each unit and casters are then bolted to the caster plate…not directly to the frame…with four bolts. This procedure strengthens the overall integrity of the rack and prevents breakage.

Guaranteed To Last

- Five-Year Guarantee against material defects and workmanship.
- Lifetime Guarantee against rust and corrosion.

NSF Certified

#1330

#1461

#1331S

#1461S

This information is for general sales and engineering use

Made For:

Crabtree McGrath Associates, Inc.

Fuller Middle School
Framingham, MA

Item #: 4
Quantity: 1

New Age Industrial Corp., Inc.
PO Box 520 • 16788 US Hwy 36 • Norton, Kansas 67654
Phone: 800-255-0104 • Fax: (877)-877-7687 • **www.NewAgeIndustrial.com**

Job: _____

Item: _____

Quantity: _____

Bun Pan Racks

APPLICATIONS: General storage and movement of trays and pans.

CONSTRUCTION: Heavy duty, high tensile, extruded aluminum. Type 6463-T5 alloy.

TRAY SLIDES: Slides are 1¼" x 1⅝" x .100 extruded aluminum angle welded to frame.

FRAME & CROSS SUPPORTS: Vertical and horizontal frame members are 1" x 1" x .070 extruded aluminum tubing. All welded unit.

CORNER GUSSETS: Gussets of 1½" x 1½" x ⅝" thick angle are welded to the inside angles (bottom side) where horizontal cross bracing meets vertical uprights. Note: Each gusset requires 4½" of weld.

CASTERS: Platform type, 5" diameter wheel, full swivel design with sealed ball bearing. Wheel material is non-marking polyurethane.

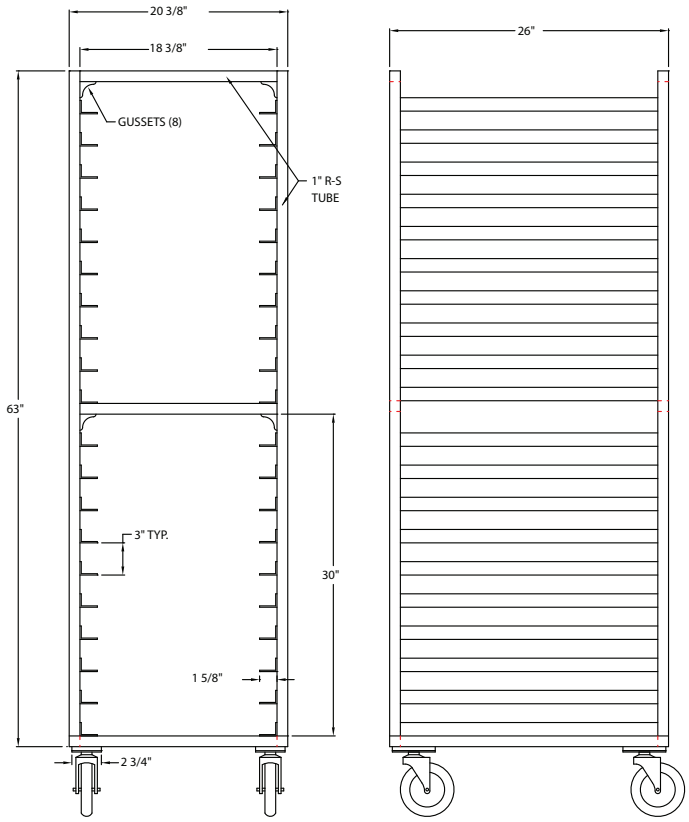

#1331

Model No.	Size W-H-D	Pan Cap.	Runner Spacing	Ship Wt.
¾-SIZE END LOADING RACK				
1361	20⅜" x 60" x 26"	17	3"	54#
END LOADING RACKS				
1461*	20 11/16" x 69¾" x 26"	38	1½"	56#
1330	20⅜" x 69¾" x 26"	30	2"	70#
1331	20⅜" x 69¾" x 26"	20	3"	58#
1332	20⅜" x 69¾" x 26"	15	4"	49#
1333	20⅜" x 69¾" x 26"	12	5"	46#
1334	20⅜" x 69¾" x 26"	10	6"	42#
SIDE LOADING RACKS				
1461S*	28⅜" x 69¾" x 19"	38	1 ½"	50#
1330S	28⅜" x 69¾" x 19"	30	2"	60#
1331S	28⅜" x 69¾" x 19"	20	3"	51#
1332S	28⅜" x 69¾" x 19"	15	4"	45#
1333S	28⅜" x 69¾" x 19"	12	5"	42#
1334S	28⅜" x 69¾" x 19"	10	6"	41#

Four 5" platform type swivel casters (#C450).
*** #1461 & #1461S Units Hold Pans By The Lip Only.**

This information is for general sales and engineering use

Made For:

Crabtree McGrath Associates, Inc.

Fuller Middle School
Framingham, MA

Item #: 4
Quantity: 1

METRO®

5 Tier; Sized as shown on plan

Item # _____

Job _____

SUPER ADJUSTABLE 2™ SUPER ERECTA SHELF®

WIRE SHELVING

Super Adjustable 2™ Super Erecta Wire Shelving is the most advanced and innovative wire storage system available. The unique Corner Release System, which allows shelves to be adjusted quickly and easily without tools, has been re-engineered to provide increased rigidity. And Super Adjustable 2™ Shelving works in conjunction with the entire Super Erecta System of shelves and accessories.

- **Maximum Space Utilization:** The Corner Release System encourages repositioning of shelves during initial assembly to reclaim wasted vertical space. In some cases, reclaimed vertical space will allow an extra shelving tier to be added to the storage unit resulting in a 25% increase in storage capacity!
- **Easily Assembled:** The unique Corner Release System enables quick and easy repositioning of shelves during the initial set up to accommodate different package or container sizes. "Total Assembly" is complete only after the shelves are properly spaced to maximize storage. SiteSelect™ Posts, with the double-groove visual guide feature, have circular grooves at 1" (25mm) increments and are numbered at 2" (51mm) intervals to easily identify proper shelf locations.
- **Easily Adjustable:** The unique shelf design and SiteSelect™ Posts enable "tool-free", quick adjustment at 1" (25mm) increments along the entire height of the post.
- **Improved Rigidity:** An enhanced Corner Release System has made Super Adjustable 2™ the most rigid, easily adjustable shelving system ever.
- **Strong:** Super Adjustable 2™ shelves hold as much weight as traditional Super Erecta wire shelving. Stationary units hold a maximum of 2,000 lb. (910kg). Maximum weight capacity per shelf (48" [1219mm] or shorter = 800 lb. [364kg]; longer than 48" [1219mm] = 600 lb. [273kg])
- **Choice of Finishes:** Super Adjustable 2™ Super Erecta shelving is available in a variety of finishes: Super Erecta Brite and chrome-plated for dry storage; Metroseal 3™ with antimicrobial product protection and stainless steel for corrosive environments; and attractive black epoxy for merchandising applications.

Dry Storage — Chrome or Super Erecta Brite™

All Environments — Metroseal 3™ with *Microban® Antimicrobial Product Protection

NSF

Mobile Stem Caster Cart

Mobile Dolly Truck

Super Adjustable 2™ Advantage . . .

Easily reposition Super Adjustable 2™ shelves during initial assembly to increase storage capacity by as much as 25%.

Corner Release System

*MICROBAN® and the MICROBAN® symbol are registered trademarks of the Microban Products Company, Huntersville, NC.

InterMetro Industries Corporation

METRO®

SUPER ADJUSTABLE 2™ SUPER ERECTA SHELF®

Adjustable Wire Shelving

10.01A

Crabtree McGrath Associates, Inc.

Fuller Middle School
Framingham, MA

Item #: 14
Quantity: 6

Job _____

SUPER ADJUSTABLE 2™ SUPER ERECTA SHELF®

WIRE SHELVING

METRO®

Dimensions

Super Adjustable 2™ Super Erecta Wire Shelving

Cat. No. Super Erecta Brite	Cat. No. Chrome	Cat. No. Metroseal 3	Cat. No. Stainless	Cat. No. Black	Shelf Width/Length (in.)	(mm)	Approx. Pkd. Wt. (lbs.)	(kg)
A1424BR	A1424NC	A1424NK3	A1424NS	A1424NBL	14x24	355x610	6	2.7
A1430BR	A1430NC	A1430NK3	A1430NS	A1430NBL	14x30	355x760	7	3.2
A1436BR	A1436NC	A1436NK3	A1436NS	A1436NBL	14x36	355x914	8	3.6
A1442BR	A1442NC	A1442NK3	A1442NS	A1442NBL	14x42	355x1066	9 1/2	4.3
A1448BR	A1448NC	A1448NK3	A1448NS	A1448NBL	14x48	355x1219	10 1/2	4.7
A1460BR	A1460NC	A1460NK3	A1460NS	A1460NBL	14x60	355x1524	14	6.3
A1472BR	A1472NC	A1472NK3	A1472NS	A1472NBL	14x72	355x1825	17	7.7
A1824BR	A1824NC	A1824NK3	A1824NS	A1824NBL	18x24	457x610	7	3.2
A1830BR	A1830NC	A1830NK3	A1830NS	A1830NBL	18x30	457x760	8	3.6
A1836BR	A1836NC	A1836NK3	A1836NS	A1836NBL	18x36	457x914	9 1/2	4.3
A1842BR	A1842NC	A1842NK3	A1842NS	A1842NBL	18x42	457x1066	11	5.0
A1848BR	A1848NC	A1848NK3	A1848NS	A1848NBL	18x48	457x1219	12	5.4
A1854BR	A1854NC	A1854NK3	A1854NS	A1854NBL	18x54	457x1370	14 1/2	6.6
A1860BR	A1860NC	A1860NK3	A1860NS	A1860NBL	18x60	457x1524	17	7.7
A1872BR	A1872NC	A1872NK3	A1872NS	A1872NBL	18x72	457x1825	20	9.1
A2124BR	A2124NC	A2124NK3	A2124NS	A2124NBL	21x24	530x610	8	3.6
A2130BR	A2130NC	A2130NK3	A2130NS	A2130NBL	21x30	530x760	9	4.1
A2136BR	A2136NC	A2136NK3	A2136NS	A2136NBL	21x36	530x914	11	5.0
A2142BR	A2142NC	A2142NK3	A2142NS	A2142NBL	21x42	530x1066	12	5.4
A2148BR	A2148NC	A2148NK3	A2148NS	A2148NBL	21x48	530x1219	14	6.4
A2154BR	A2154NC	A2154NK3	A2154NS	A2154NBL	21x54	530x1370	16	7.3
A2160BR	A2160NC	A2160NK3	A2160NS	A2160NBL	21x60	530x1524	18	8.2
A2172BR	A2172NC	A2172NK3	A2172NS	A2172NBL	21x72	530x1825	24	10.9
A2424BR	A2424NC	A2424NK3	A2424NS	A2424NBL	24x24	610x610	9	4.1
A2430BR	A2430NC	A2430NK3	A2430NS	A2430NBL	24x30	610x760	11	5.0
A2436BR	A2436NC	A2436NK3	A2436NS	A2436NBL	24x36	610x914	13	5.9
A2442BR	A2442NC	A2442NK3	A2442NS	A2442NBL	24x42	610x1066	15	6.8
A2448BR	A2448NC	A2448NK3	A2448NS	A2448NBL	24x48	610x1219	16	7.3
A2454BR	A2454NC	A2454NK3	A2454NS	A2454NBL	24x54	610x1370	18	8.6
A2460BR	A2460NC	A2460NK3	A2460NS	A2460NBL	24x60	610x1524	21	9.5
A2472BR	A2472NC	A2472NK3	A2472NS	A2472NBL	24x72	610x1825	26	11.8
	A3036NC	A3036NK3	A3036NS		30x36	760x914	15	6.8
	A3048NC	A3048NK3	A3048NS		30x48	760x1219	21	9.5
	A3060NC	A3060NK3	A3060NS		30x60	760x1524	26 1/2	11.8
	A3072NC	A3072NK3	A3072NS		30x72	760x1829	31	14.0
	A3636NC	A3636NK3	A3636NS		36x36	910x914	18	8.2
	A3648NC	A3648NK3	A3648NS		36x48	910x1219	23	10.4
	A3660NC	A3660NK3	A3660NS		36x60	910x1524	29	13.1
	A3672NC	A3672NK3	A3672NS		36x72	910x1829	34 1/2	15.4

NOTE: MICROBAN® protects the Metroseal 3 coating from bacteria, mold, mildew and fungi that cause odors, stains and product degradation. For Metroseal 3 shelving information see sheet #10.10A.

Replacement Parts
Each kit includes components for one original Super Adjustable or Super Adjustable 2 shelf; (4) wedges, (4) sleeves, (4) shelf releases.
Cat. No. SAKITA2

SiteSelect™ Posts

STATIONARY Height* (in.)	(mm)	Cat. No. Plated	Cat. No. Metroseal 3	Cat. No. Stainless	Cat. No. Black	MOBILE† Height* (in.)	(mm)	Cat. No. Plated	Cat. No. Metroseal 3	Cat. No. Stainless	Cat. No. Black	Approx. Pkd. Wt. (lbs.)	(kg)
7 1/2	191	7P			7PBL							1/2	0.3
14 1/2	370	13P	13PK3	13PS	13PBL							1	0.5
27 1/2	700	27P		27PS	27PBL	27 1/2	699	27UP		27UPS		1 3/4	0.75
34 1/2	875	33P	33PK3	33PS	33PBL	33 7/8	861	33UP	33UPK3	33UPS	33UPBL	2	0.9
54 9/16	1385	54P	54PK3	54PS	54PBL	54	1370	54UP	54UPK3	54UPS	54UPBL	3	1.4
62 9/16	1590	63P	63PK3	63PS	63PBL	62	1575	63UP	63UPK3	63UPS	63UPBL	3 1/2	1.6
						70	1778		70UPK3			3 3/4	1.7
74 5/8	1895	74P	74PK3	74PS	74PBL	74	1880	74UP	74UPK3	74UPS	74UPBL	4	1.8
86 5/8	2200	86P	86PK3	86PS	86PBL	86	2185	86UP	86UPK3	86UPS	86UPBL	4.5	2.0
96 5/8	2454	**96P										1/2	2.5

*Height includes leveling bolt and cap.
**96P should not be used in units less than 24" (610mm) deep. Consult Metro Engineering for alternate recommendations.
Post lengths to be specified as cut to a round number, ie: 74P cut to 69"...This will result in an overall post height with adjustment of 69 3/8 to 69 7/8.
† Mobile posts come without leveling bolt assembly to accommodate stem casters.

Important: When ordering by components remember that for maximum stability, units should be kept as wide and low as possible.

All Metro Catalog Sheets are available on our Web Site: **www.metro.com**

InterMetro Industries Corporation
North Washington Street, Wilkes-Barre, PA 18705

L02-006A
Printed in U.S.A. Rev. 1/06

SUPER ADJUSTABLE 2™ SUPER ERECTA SHELF®
Adjustable Wire Shelving

METRO®

Crabtree McGrath Associates, Inc.
Fuller Middle School
Framingham, MA
Item #: 14
Quantity: 6

CHANNEL MANUFACTURING, INC.

LIFETIME TOUGH

CORRECTIONS APPROVED

Item No. _____

Quantity_____

Job Name_____

Spec No. _____

DUNNAGE RACKS

LIFETIME TOUGH

ALUMINUM OR STAINLESS CONSTRUCTION

Custom Sizes Available

EXD2048

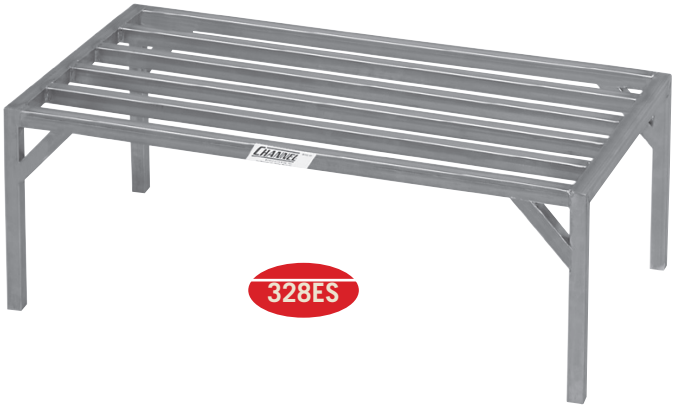

328ES

TUBULAR DUNNAGE RACKS

Aluminum Construction

Model	H	W	D	Weight
EXD2036	12"	36"	20"	14
EXD2042	12"	42"	20"	15
EXD2048	12"	48"	20"	16
EXD2054	12"	54"	20"	17
EXD2060	12"	60"	20"	18
EXD2436	12"	36"	24"	15
EXD2442	12"	42"	24"	16
EXD2448	12"	48"	24"	17
EXD2454	12"	54"	24"	18
EXD2460	12"	60"	24"	19

CHANNEL ARCH DUNNAGE RACKS

Stainless Construction

Model	H	W	D	Weight
328ES	12"	36"	20"	16
329ES	12"	42"	20"	28
330ES	12"	48"	20"	20
331ES	12"	54"	20"	22
332ES	12"	60"	20"	24

Add **/8** after model number for 8" height.

See **Mobile Dunnage Dollies** spec sheet for caster options.

APPLICATIONS: Lifetime dunnage racks keep product organized and off of the floor. Meets all sanitary health codes. Made to measure for walk-in freezers, refrigerators and dry storage areas.

CONSTRUCTION: Heavy duty, high tensile extruded aluminum. Type 6063-T5 alloy. Lifetime guarantee against rust. Shipped fully assembled and ready for use.

EXD - Series: Heavy Duty construction with high tensile aluminum 4" E channel.

ES - Series: All heli-arc welded, 1" Sq. tubular stainless construction. 4000 lbs.distributed weight capacity.

MADE IN THE USA NSF

Notes

55 Channel Drive • Port Washington, NY11050-2216
8891 NW 102nd Street • Medley, FL 33178

Crabtree McGrath Associates, Inc.

Fuller Middle School
Framingham, MA

Item #: 15
Quantity: 2

Crabtree McGrath Associates, Inc.

Fuller Middle School
Framingham, MA

Item #: 16
Quantity: 3

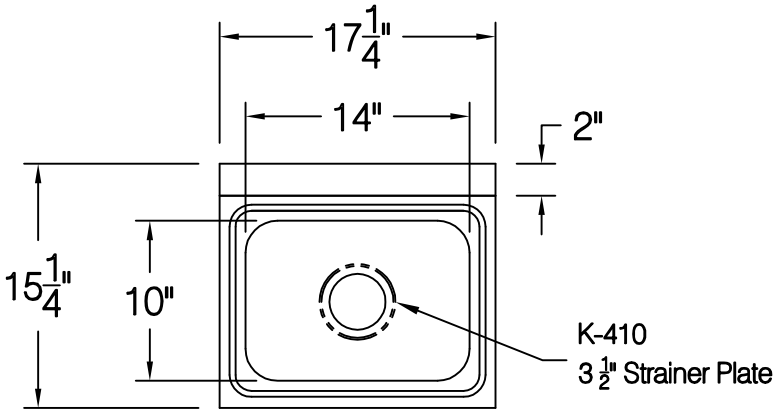

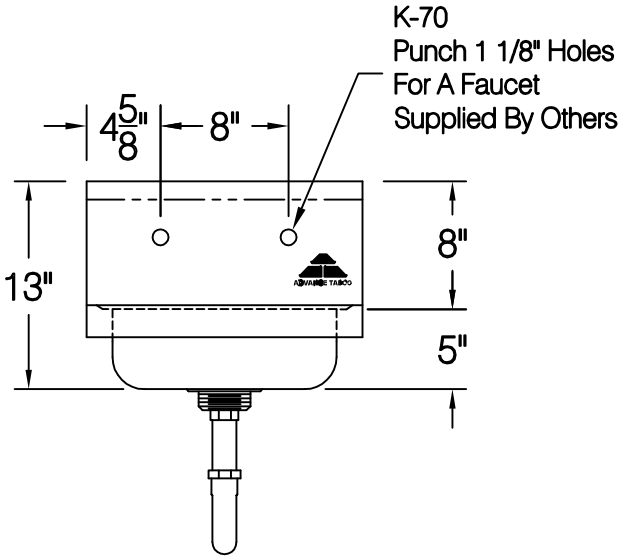

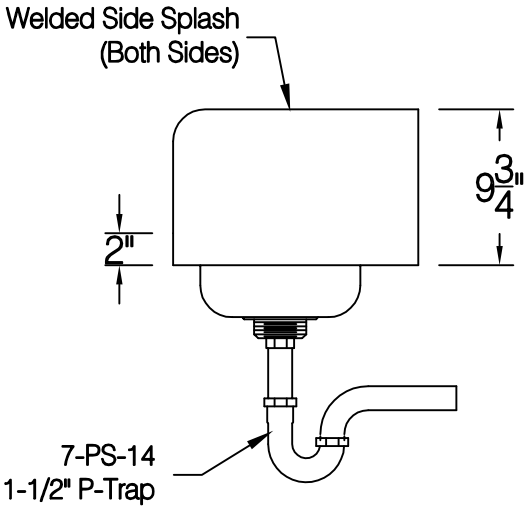

CE TABCO
TLAND BLVD
NY 11717-8380
-645-3166
-242-4589

JOB NAME:	PO#	Order / Drawing#	DATE: 02/04/13
MODEL #: 7-CM-66	Qty:	Item #:	Tolerance: + .500 - .500
MATERIAL: 20 ga. 304 S/S			
CUSTOMER: Crabtree McGrath Assoc.	DRAWN BY: T. Anderson	Scale: 1=12	NSF

NO.	REVISIONS:	BY
1		
2		
3		
4		
5		
6		
7		
8		

Print Approval

Accessory Locations MUST Be Verified Prior To Unit Being Fabricated

Locations Verified By Date

Print Approved By Date

ONLY:

WELDING:
1) DATE: _____ INSPECTED BY: _____ 2) DATE: _____ INSPECTED BY: _____

FINAL INSPECTION:
1) DATE: _____ INSPECTED BY: _____ 2) DATE: _____ INSPECTED BY: _____

T&S BRASS AND BRONZE WORKS, INC.
2 SADDLEBACK COVE / P.O. BOX 1088 / TRAVELERS REST, SC 29690
PHONE 800-476-4103 FAX 864- 834-3518

REG.#A2601
ISO #9002

Model No.
~~B-0330-04~~
Item No.:

Job Name:

Architect/Engineer Approval:

Notes:

Provide a 119X gooseneck with
B-2199-02F-10 aerator tip in lieu of standard

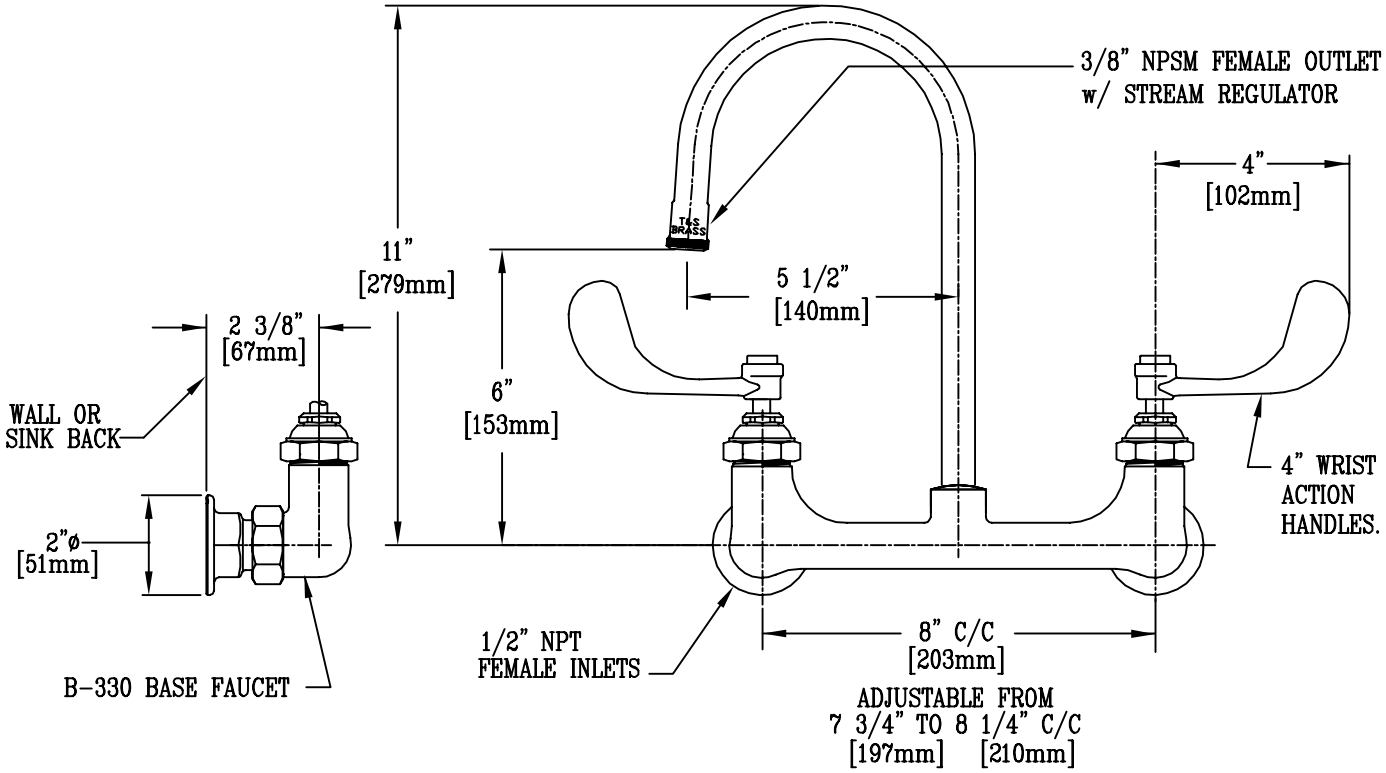

NSF STANDARD 61, SECTION 9 CERTIFIED.

Product Description:	Drawn:	Checked	Scale:
8" c/c WALL MOUNTED MIXING FAUCET w/	WJS	MVW	1:4

Crabtree McGrath Associates, Inc.

Fuller Middle School
Framingham, MA

Item #: 16
Quantity: 3

T&S BRASS AND BRONZE WORKS, INC.

2 Saddleback Cove / P.O. Box 1088
Travelers Rest, SC 29690

Travelers Rest, SC: 800-476-4103 • Simi Valley, CA: 800-423-0150 • Fax: 864-834-3518 • www.tsbrass.com

Model No.
B-0199-02-F10

Item No.

This Space for Architect/Engineer Approval

Job Name_____Date_____

Model Specified_____ Quantity_____

Customer/Wholesaler_____

Contractor_____

Architect/Engineer_____

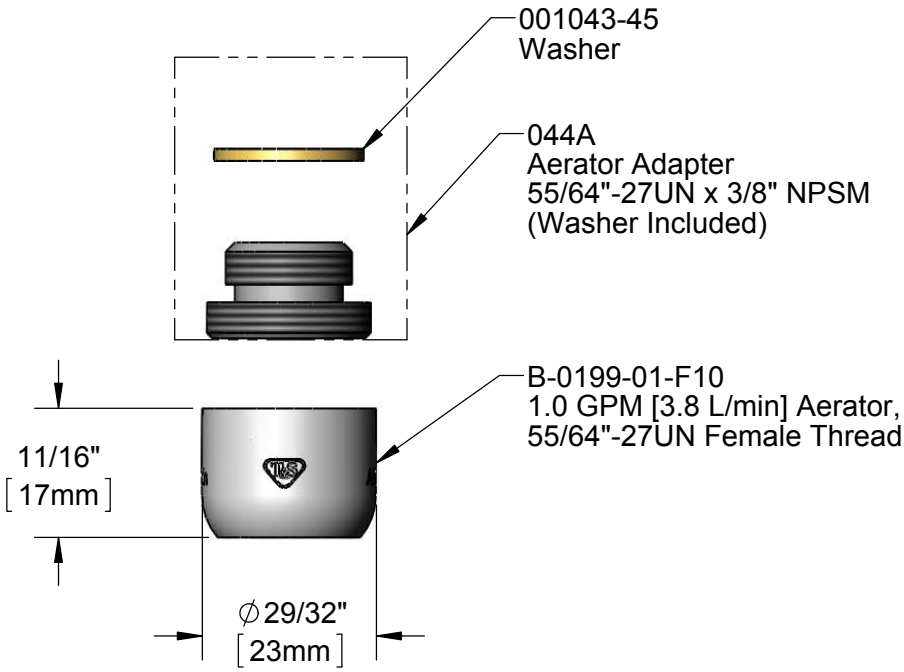

Product Specifications:
1.0 GPM Aerator w/ 3/8" NPSM Male Adapter

Drawn	Checked	Approved
KJG	DHL	JHB

Crabtree McGrath Associates, Inc.

Fuller Middle School
Framingham, MA

Item #: 16
Quantity: 3

SLIM JIM® CONTAINERS

The Slim Jim® container delivers the durability needed for commercial environments combined with brand new innovation to increase worker productivity. New product features and accessories deliver the most efficient solution for collection, transportation, and disposal of multi-stream waste and recyclables.

Features and Benefits:

- Venting channels make removing liners up to 80% easier, improving productivity and reducing the risk of worker injury
- Four bag cinches secure liners around the rim of the container and allow for quick, knot-free liner changes
- Handles at the base and rim of the container improve grip and control while lifting and emptying full containers
- Rim with rib-strengthened design increases strength and resists crushing
- Build a recycling station with a variety of dolly and lid options to meet any facility need

COLORS AVAILABLE

Blue, Green, Black, Beige, Brown, Gray, Yellow*, Red*

* 23-gallon only

Material Composition:

Injection molded with a high-quality resin blend.

Accessories:

STAINLESS STEEL DOLLIES

- Slim Jim® Single Dolly
- Slim Jim® Double Dolly
- Slim Jim® Triple Dolly
- Slim Jim® Quadruple Dolly

RESIN DOLLY

- Slim Jim® Trainable Dolly

LIDS

- Bottles and Cans Lid
- Paper Lid
- Mixed Recycling Lid
- Hinged Lid
- Swing Lid

Provided by Owner; Cutsheet provided for design intent

23-Gallon Slim Jim® Container

Crabtree McGrath Associates, Inc.

Fuller Middle School
Framingham, MA

Item #: 17
Quantity: 3

SLIM JIM® CONTAINERS

SKU #	DESCRIPTION	COLOR	CAPACITY		LENGTH		WIDTH		HEIGHT		PACK SIZE
			GAL	L	IN	CM	IN	CM	IN	CM	
1971258	SLIM JIM® CONTAINER	GRAY	16	61	22"	55.88	11"	27.94	25"	63.50	4
1955959	SLIM JIM® CONTAINER	BLACK	16	61	22"	55.88	11"	27.94	25"	63.50	4
1971259	SLIM JIM® CONTAINER	BEIGE	16	61	22"	55.88	11"	27.94	25"	63.50	4
1956181	SLIM JIM® CONTAINER	BROWN	16	61	22"	55.88	11"	27.94	25"	63.50	4
1971257	SLIM JIM® CONTAINER	BLUE	16	61	22"	55.88	11"	27.94	25"	63.50	4
1955960	SLIM JIM® CONTAINER	GREEN	16	61	22"	55.88	11"	27.94	25"	63.50	4
FG354060GRAY	SLIM JIM® CONTAINER	GRAY	23	87	22"	55.88	11"	27.94	30"	76.20	4
FG354060BLA	SLIM JIM® CONTAINER	BLACK	23	87	22"	55.88	11"	27.94	30"	76.20	4
FG354060BEIG	SLIM JIM® CONTAINER	BEIGE	23	87	22"	55.88	11"	27.94	30"	76.20	4
1956187	SLIM JIM® CONTAINER	BROWN	23	87	22"	55.88	11"	27.94	30"	76.20	4
1956185	SLIM JIM® CONTAINER	BLUE	23	87	22"	55.88	11"	27.94	30"	76.20	4
1956186	SLIM JIM® CONTAINER	GREEN	23	87	22"	55.88	11"	27.94	30"	76.20	4
1956188	SLIM JIM® CONTAINER	YELLOW	23	87	22"	55.88	11"	27.94	30"	76.20	4
1956189	SLIM JIM® CONTAINER	RED	23	87	22"	55.88	11"	27.94	30"	76.20	4
FG354007BLUE	SLIM JIM® CONTAINER	BLUE (RECYCLING)	23	87	22"	55.88	11"	27.94	30"	76.20	4
FG354007GRN	SLIM JIM® CONTAINER	GREEN (RECYCLING)	23	87	22"	55.88	11"	27.94	30"	76.20	4

LIDS FOR SLIM JIM® CONTAINERS

A variety of lid options for Slim Jim® containers encourages waste separation and recycling with interchangeable, color-coded tops.

Features and Benefits:

SLIM JIM® LIDS

- **Swing Lid** conceals waste from view and provides no-touch access
- **Hinged Lid** folds flat while in use and completely covers waste when closed; complies with Health and Human Services Standard 5-501.11.3 of the 2005 FDA Food Code
- **Bottles and Cans Lid/Paper Lid/Mixed Recycling Lid** encourages waste separation and recycling with interchangeable color-coded tops

Material Composition:

Injection-grade resin material

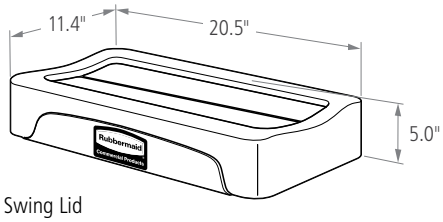

Swing Lid

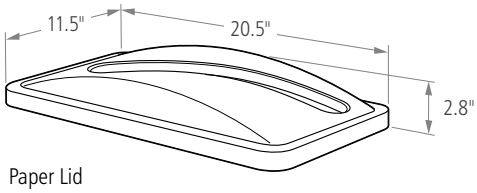

Paper Lid

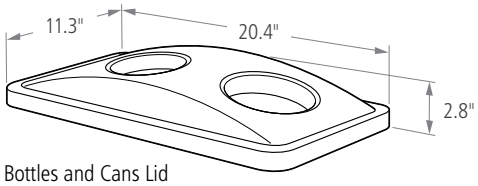

Bottles and Cans Lid

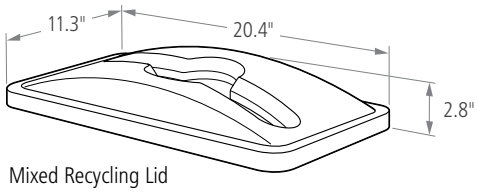

Mixed Recycling Lid

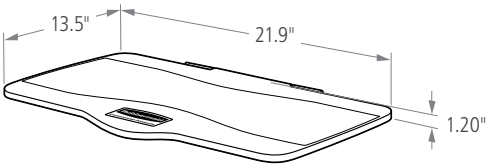

Hinged Lid (Closed Lid)

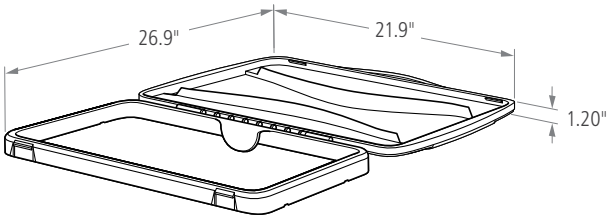

Hinged Lid (Open Lid)

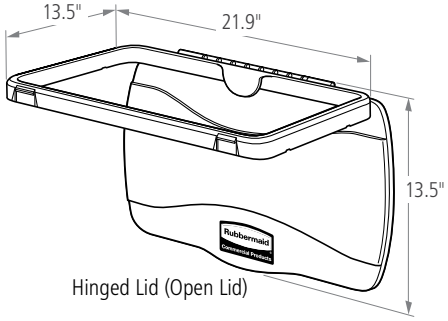

Hinged Lid (Open Lid)

SKU #	DESCRIPTION	COLOR	LENGTH		WIDTH		HEIGHT		PACK SIZE
			IN	CM	IN	CM	IN	CM	
FG267360BEIG	SWING LID	BEIGE	20.50"	52.07	11.40"	28.95	5"	12.70	4
FG267360BLA	SWING LID	BLACK	20.50"	52.07	11.40"	28.95	5"	12.70	4
FG267360BLUE	SWING LID	BLUE	20.50"	52.07	11.40"	28.95	5"	12.70	4
FG267360GRAY	SWING LID	GRAY	20.50"	52.07	11.40"	28.95	5"	12.70	4
1829400	SWING LID	GREEN	20.50"	52.07	11.40"	28.95	5"	12.70	4
FG269288BLUE	BOTTLES AND CANS LID	BLUE	20.40"	51.82	11.30"	28.70	2.80"	7.11	4
FG269288BRN	BOTTLES AND CANS LID	BROWN	20.40"	51.82	11.30"	28.70	2.80"	7.11	4
FG269288GRN	BOTTLES AND CANS LID	GREEN	20.40"	51.82	11.30"	28.70	2.80"	7.11	4
FG269288RED	BOTTLES AND CANS LID	RED	20.40"	51.82	11.30"	28.70	2.80"	7.11	4
FG269288YEL	BOTTLES AND CANS LID	YELLOW	20.40"	51.82	11.30"	28.70	2.80"	7.11	4
FG270388BLUE	PAPER LID	BLUE	20.50"	52.07	11.50"	29.21	2.80"	7.11	4
FG270388GRN	PAPER LID	GREEN	20.50"	52.07	11.50"	29.21	2.80"	7.11	4
1788372	MIXED RECYCLING LID	BLUE	20.40"	51.82	11.30"	28.70	2.80"	7.11	4
FG267400BLA	HINGED LID	BLACK	21.90"	55.63	13.50"	34.29	1.20"	3.05	4

Crabtree McGrath Associates, Inc.

Fuller Middle School
Framingham, MA

Item #: 17
Quantity: 3

DOLLIES FOR SLIM JIM® CONTAINERS

A variety of dolly options for Slim Jim® containers allow for more efficient collection and transport of waste and recyclables, increasing worker productivity.

Features and Benefits:

STAINLESS STEEL DOLLIES

- Collect and transport up to four streams of waste and recyclables with the new stainless steel multi-dollies for Slim Jim® containers
- Constructed of quality stainless steel material that is easy to clean and won't rust or chip in commercial environments
- Features 3" nonmarking quiet casters that allow for smooth and quiet maneuverability
- Locking feature on casters creates a stable recycling station or collection site
- Fits both 16- and 23-gallon Slim Jim® containers

Material Composition:

STAINLESS STEEL DOLLIES

- High-quality stainless steel

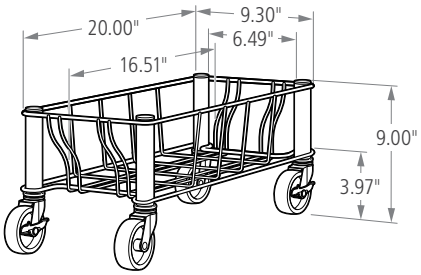

Single Dolly

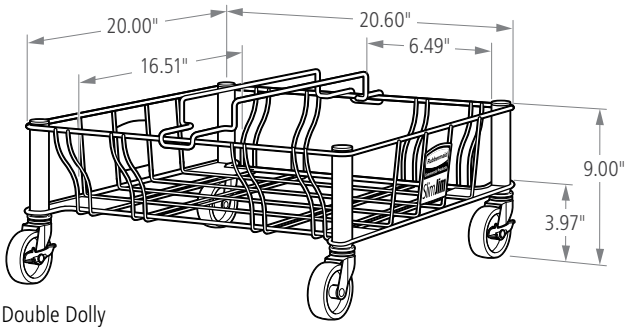

Double Dolly

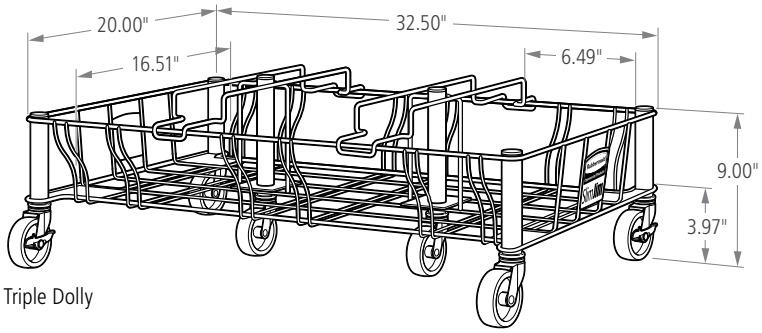

Triple Dolly

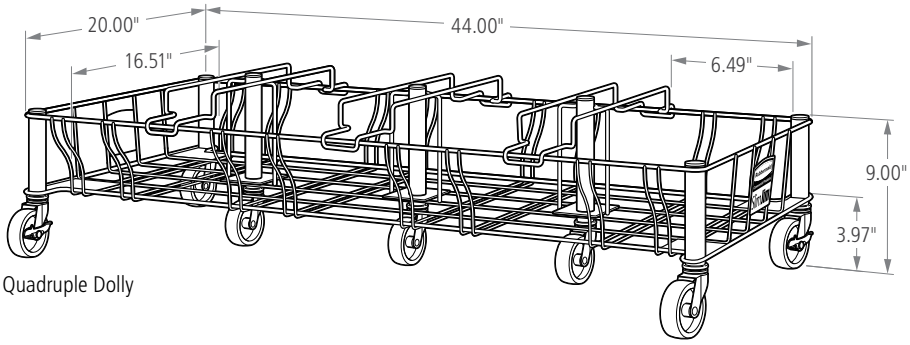

Quadruple Dolly

DOLLY SPECIFICATIONS

SKU #	DESCRIPTION	CAPACITY		LENGTH		WIDTH		HEIGHT		PACK SIZE	HEIGHT OFF GROUND 16 GAL		HEIGHT OFF GROUND 23 GAL	
		LBS	KG	IN	CM	IN	CM	IN	CM		IN	CM	IN	CM
1968468	STAINLESS STEEL SINGLE DOLLY	100	45	20"	50.80	9.30"	23.62	9"	22.86	2	28.80"	72.30	33.90"	86.20

Crabtree McGrath Associates, Inc.

Fuller Middle School
Framingham, MA

Item #: 17
Quantity: 3

ITEM 18

CUSTOM FABRICATED FOODSERVICE EQUIPMENT

DESCRIPTION: **Prep Table with Sink**

NO CUT SHEET AVAILABLE

CONSTRUCTION FEATURES:

Make - Fabricate per General Construction this Section
Size - 12'-0" x 30" x 36" high to work surface plus 10" high splash at rear; two 18" x 18" x 10" deep integral sink basins
Construction - 14 gauge stainless steel top, basins and splash, angle reinforced, eight legs with gussets and adjustable feet, partial undershelf, rear splash, and turn down front and ends, secured 3" off face of wall.
Accessories - Drawer assembly, splash mounted faucet set and two 2" lever waste outlets.

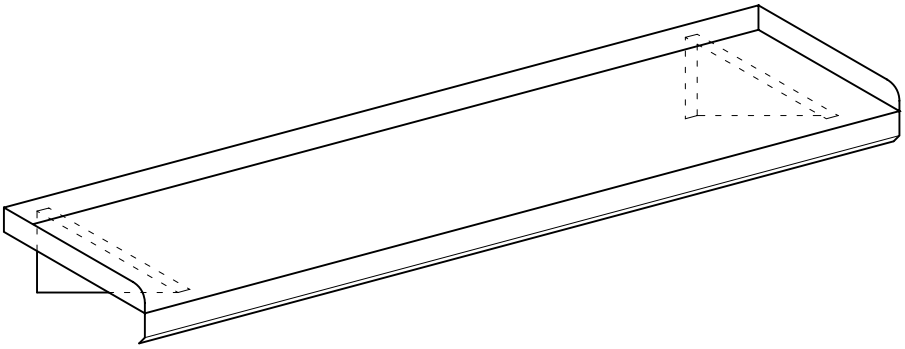

CUSTOM FABRICATED FOODSERVICE EQUIPMENT

DESCRIPTION: **Wall shelf**

12'-0" x 10" mounted 54" above finished floor

NO CUT SHEET AVAILABLE

CONSTRUCTION FEATURES:

16 gauge stainless steel shelf
Rear and ends turned up 1-1/2" and corners welded
Front turned down 1-1/2" and in 1/2" at 45°
Mount on three 14 gauge stainless steel flag brackets with suitable anchors

robot coupe®

R 301 Ultra B

D	
Number of meals per service	10 to 30
Quantity per batch in cutter function	Up to 3.3 lbs

3 BLADES

3.5 Qt

A SALES FEATURES

The R 301 Ultra B Bowl Cutter Mixer is ideal for grinding, mincing and kneading, as well as for making mousses, emulsions and smooth stuffings. It effortlessly performs even the lengthiest task in just a few minutes, consistently producing a flawless end product.

B TECHNICAL FEATURES

R 301 Ultra B Bowl Cutter Mixer. Single phase 120/60/1. Power 1.5 HP. Speed: 1725 rpm. 3.5 qt. cutter bowl in stainless steel and smooth bowl-base blade assembly. 10 to 30 meals.

Select your options at the back page, F part.

C TECHNICAL DATA

Output power	1.5 HP
Electrical data	120V/60/1 - 12 Amp
Speed	1725 rpm
Dimensions (WxDxH)	8 1/2''x11 15/16''x15 11/16''
Rate of recyclability	95%
Net weight	23 lbs
Nema #	5-15P
Reference	R 301 U B120V/60/1

E PRODUCT FEATURES / BENEFITS

MOTOR BASE

- Direct drive induction motor (no belt) for intensive use.
- Power1.5 HP
- Stainless steel motor shaft.
- Motor base made from heavy-duty composite material.
- Magnetic safety system, thermal failsafe and motor brake.
- **Speed**: 1725 rpm.
- **Pulse** button for better cut precision.

CUTTER FUNCTION

- 3.5 qt. stainless-steel cutter bowl with handle for better grip
- Bowl-base high resistance smooth blade assembly for homogeneous processing even for small amounts
- Central lid opening for adding liquid or solid ingredients during processing
- High heat- and shock-resistant see-through lid to monitor processing from start to finish
- All parts are dishwasher-safe and can easily be removed for cleaning

ACCESSORIES INCLUDED

- Cutter attachment: lid, bowl, and high resistance stainless steel smooth blade assembly with removable cap.

STANDARDS
ETL electrical and sanitation Listed/ cETL (Canada)

ETL LISTED 9900098 Conforms to UL NSF/ANSI Std 763 Std 8 Certified to CAN/CSA Std C22.2 No.195

Robot Coupe USA, Inc.

Crabtree McGrath Associates, Inc.

Fuller Middle School
Framingham, MA

Item #: 20
Quantity: 1

01 Ultra B

R 301 Ultra B

F OPTIONAL ACCESSORIES

- Coarse serrated blade assembly for kneading and grinding, ref 27288
- Fine serrated blade assembly for chopping herbs and spices, ref 27287
- Cuisine Kit ref 27396

Coarse-serrated

Fine-serrated

G ELECTRICAL DATA

120V/60/1 - delivered with cord and plug

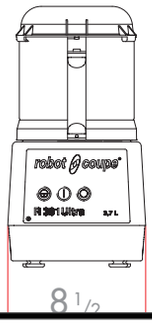

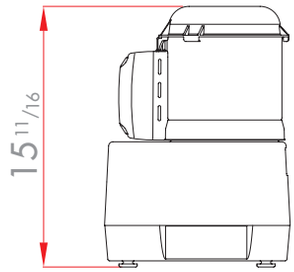

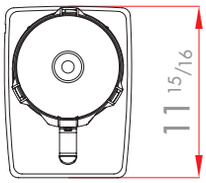

Edlund S-11 NSF Manual Can Openers

For the very highest standard in food safety and sanitation, the S-11 manual can opener has over 17 years of success in foodservice worldwide utilizing proprietary can opening technology. The patented S-11 has successfully opened nearly one billion cans without a single complaint – giving it a stainless reputation. Add in the industry's longest warranty and you've got an opener that's a cut above any other.

- 5 year warranty
- Built of stainless steel construction
- Available with screw down base or clamp on model

Crabtree McGrath Associates, Inc.

Fuller Middle School
Framingham, MA

Item #: 21
Quantity: 1

Open up to a higher standard in food safety.

Dishwasher Safe

Toss in the dishwasher for easy cleaning. The industry's first all-stainless can opener, the S-11 resists rust and stays looking new, no matter how many times it's washed.

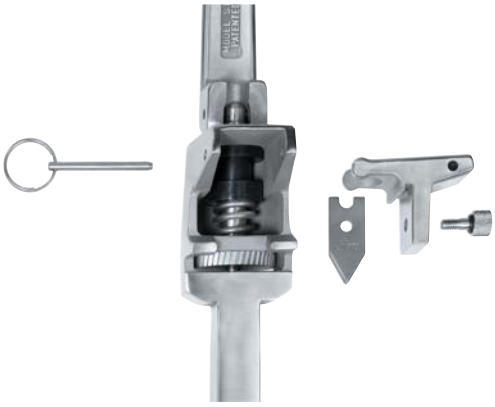

Fewer Parts

The S-11's advanced design means fewer parts than most other openers, and its patented Quick Change Mechanism makes knife and gear replacement fast and easy.

Quick Change Mechanism

Makes gear replacement fast and easy.

S-11 with clamp base

Tamper proof S-11 opener with tamper proof base

ST-93 Rustproof can opener cleaning tool

A tamper proof version of the S-11 is now available equipped with locking hardware.

SPECIFICATIONS:

MODEL #	DESCRIPTION	PRODUCT CODE	CASE CUBE FT³/M³	CASE WEIGHT LBS./KGS
S-11	Quick change can opener with standard length bar and new plated base	15000	3.3/0.1	30/13.6
S-11 L	Opener with stainless steel base	15300	3.3/0.1	30/13.6
S-11 E	Opener with stainless steel clamp base	15400	3.3/0.1	31/14.1
S-11 C	Opener with long bar and plated steel base	15020	3.3/0.1	30/13.6
S-11 CL	Opener with long bar and stainless steel base	15320	3.3/0.1	30/13.6
S-11 CE	Opener with long bar and cast stainless steel clamp base	15420	3.3/0.1	32/14.5
S-11 WB	Opener with long bar and cast stainless steel clamp base	15200	3.3/0.1	21/9.5
S-11 TP	Tamper proof opener with tamper proof base	15080	3.3/0.1	30/13.6
ST-93	Rustproof can opener cleaning tool	38500		.5/.2

Note: S-11 Series standard length bar is 16″ (40.6 cm) long. Extra long bar is 22″ (55.9) cm) long.

EDLUND ISO 9001:2000 CERTIFIED NSF®

Edlund *We're in your kitchen.*™

Crabtree McGrath Associates, Inc.

Fuller Middle School
Framingham, MA

Item #: 21
Quantity: 1

Provided by Owner; Cutsheet provided for design intent

Rubbermaid® Commercial Products

Round Brute® Containers

Dolly 2640

Industry leader in waste and material handling applications.

- All-plastic, professional-grade construction will not rust, chip or peel; resists dents.
- Strong, snap-on lids are available for secure, stable stacking.
- Reinforced rims add strength and durability.
- Built-in handles allow easy, non-slip lifting and anti-jam nesting.
- Double-ribbed base increases stability and dragging capacity.
- Gray, White and Yellow are USDA Meat & Poultry Equipment Group Listed and assist in complying with HACCP guidelines.
- Easy twist on, twist off dolly provides safe mobility.
- Certified to NSF Std. #2 (gray, white and yellow) and Std. #21.
- 2632/2637, 2643/2647 are CSFM approved when used as container/lid combo.
- 2640 casters are non-marking.

Dolly 2650

Lid 3543

Lid 2637-88
Lid 2657-88

Caddy Bag 2642

Brute	2655	2643	2632	2620	2610
Lid	2654	2645	2631	2619	2609
Funnel Lid			2632		
Dome Lid	2657-88		2637-88		
Dolly	2640	2640	2640	2640	
Dolly	2650				
Caddy Bag		2642	2642		
Dimensions	26½ dia x 33"h	24"dia x 31½"h	22"dia x 27¼"h	19½"dia x 22⅞h	15⅝"dia x 17⅛"h
Capacity	55 gal	44 gal	32 gal	20 gal	10 gal
Colors	G	DB, G, R, W, Y	DB, G, R, W, Y	DB, G, W, Y	G, W

InterMetro Industries Corporation
North Washington Street
Wilkes-Barre, PA 18705
www.metro.com

Four tier with 63" high posts on casters

METROMAX Q™ SHELVING

with *Microban Antimicrobial Product Protection

Part of the innovative MetroMax iQ™ Storage System, MetroMax Q™ is a longer life storage solution than conventional wire shelving. The product offers durable polymer mats that remove for easy cleaning and protect stored items from damage. Quick adjust shelves and MetroMax iQ accessories provides a very efficient use of storage space. MetroMax Q™ is integrated with online space planning tools and tutorials. **www.metro.com/iQ**

- **Longer-life performance:** Durable, corrosion proof polymer mats protect the shelves from normal wear and tear. Robust epoxy coated steel frames and posts hold as much weight as Metro's wire shelving. Weight capacity for evenly distributed loads:
  800 lbs. (363kg) per shelf for lengths of 24" to 48" (610 to 1220mm)
  600 lbs. (275kg) per shelf for lengths of 54" (1370mm) or longer
  2,000 lbs. (907kg) maximum per stationary unit.
- **Interchangeable:** MetroMax Q and MetroMax i™ shelves, posts, and most accessories are compatible on the same unit. Use MetroMax Q shelves with MetroMax i™ polymer posts for increased corrosion protection. Use MetroMax i™ solid shelves when spill containment is required or as a bottom shelf to protect supplies from dirt or backsplashes from mops.
- **Easier to clean and maintain:** Polymer mats can be easily removed and cleaned in a sink or dish machine. Microban antimicrobial product protection is built into the high contact areas of the shelf including the mats, frames, and posts to protect the product from bacteria, mold, mildew, and fungus that cause odors and product degradation. Microban protection keeps the product "cleaner between cleanings".
- **Quick to Adjust:** Patented corner release allows shelves to be unlocked without tools. Simply flip each corner release, relocate the wedge connectors on the posts, and reposition the shelf. Quickly adjust shelves to reclaim wasted vertical space.
- **Smooth, Protective Surfaces:** Smooth shelf mats protect packaged items from unwanted rips, tears, or damage.
- **Open Grid and Solid Mat Options:** MetroMax Q is available with open grid mats as standard. Open grid shelves promote air circulation and light penetration.
  MetroMax i™ solid shelves can be used with MetroMax Q grid shelves on the same unit and are available in 18" and 24" (457 and 610mm) depths. For 21" (530mm) deep MetroMax Q, solid mat overlays are available.
- **Efficient, Organized Storage:** Premium MetroMax iQ™ accessories efficiently organize, contain, and compartmentalize ***all*** space between shelves.
- **Quick to Assemble:** MetroMax Q assembles easily in minutes, without tools. Shelves can be adjusted at 1" (25mm) increments along the post. Shelf wedges have a window to locate your desired position.

MetroMax Q Mobile Unit

NSF

MetroMax Q with Accessories and MetoMax i Solid Bottom Shelf

*MICROBAN® and the MICROBAN® symbol are registered trademarks of the Microban Products Company, Huntersville, NC.

Crabtree McGrath Associates, Inc.

Fuller Middle School
Framingham, MA

Item #: 23
Quantity: 2

Specifications

- **Shelf frames and posts:** Steel with electroplated substrate and highly durable, abrasion-resistant epoxy finish. Epoxy finish has built-in Microban antimicrobial product protection. The adjustable foot is reinforced nylon.
- **Shelf Mats:** Injection molded polypropylene with exclusive built-in Microban® antimicrobial product protection.
- **Shelf Wedge Connector:** Reinforced nylon.
- **Temperature range:** -20°F (-29°C) to 125°F (52°C) continuous use, with intermittent exposure to 200°F (93°C) for cleaning.

Standard Interchangeable Shelves

- Part number includes shelf with removable mats and one bag of wedges.
- MetroMax Q grid shelves, MetroMax i™ grid and solid shelves are all compatible on the same unit.

Nominal Width (in.)	(mm)	Nominal Length (in.)	(mm)	MetroMax Q Shelf with Grid Mat Model No.	Approx. Pkd. Wt. (lbs.)	(kg)	MetroMax i™ Shelf with Solid Mat Model No.	Approx. Pkd. Wt. (lbs.)	(kg)
18	457	24	610	MQ1824G	6.2	2.8	MX1824F	12.7	5.8
18	457	30	760	MQ1830G	8.0	3.6	MX1830F	14.5	6.6
18	457	36	914	MQ1836G	9.7	4.4	MX1836F	17.2	7.8
18	457	42	1060	MQ1842G	11.4	5.2	MX1842F	20.1	9.1
18	457	48	1220	MQ1848G	13.2	6.0	MX1848F	23.1	10.5
18	457	54	1372	MQ1854G	15.0	6.8	MX1854F	21.5	9.7
18	457	60	1524	MQ1860G	16.7	7.6	MX1860F	23.2	10.5
18	457	72	1829	MQ1872G	20.0	9.1	MX1872F	27.5	12.5
21	530	24	610	MQ2124G	8.0	3.6	—		
21	530	30	760	MQ2130G	9.7	4.4	—		
21	530	36	914	MQ2136G	11.4	5.2	—		
21	530	42	1060	MQ2142G	12.8	5.8	—		
21	530	48	1220	MQ2148G	14.5	6.6	—		
21	530	54	1372	MQ2154G	16.7	7.6	—		
21	530	60	1524	MQ2160G	18.5	8.4	—		
21	530	72	1829	MQ2172G	21.7	9.9	—		
24	610	24	610	MQ2424G	9.7	4.4	MX2424F	14.2	6.4
24	610	30	760	MQ2430G	11.4	5.2	MX2430F	15.9	7.2
24	610	36	914	MQ2436G	13.1	6.0	MX2436F	19.6	8.9
24	610	42	1060	MQ2442G	14.1	6.4	MX2442F	21.5	9.8
24	610	48	1220	MQ2448G	15.8	7.1	MX2448F	25.3	11.5
24	610	54	1372	MQ2454G	18.5	8.4	MX2454F	25.0	11.3
24	610	60	1524	MQ2460G	20.3	9.2	MX2460F	26.8	12.1
24	610	72	1829	MQ2472G	23.5	10.7	MX2472F	31.0	14.1

Actual Dimensions:
Width: Add 3/8" (10mm) to nominal size.
Length: Subtract 3/16" (5mm) from nominal size.

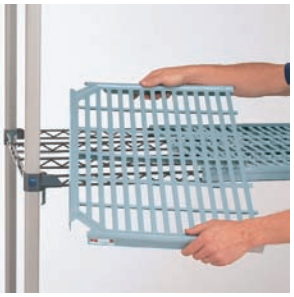

MetroMax Q Open Grid Shelf

MetroMax i™ Solid Shelf

Heavy-Duty Dunnage Shelves

- Corrosion proof MetroMax i™ dunnage shelf is compatible with MetroMax Q.
- Open grid and solid version available.
- Weight capacity per shelf evenly distributed: 1,200 lbs. (544kg) on shelves up to and including 48" (1220mm) long; 900 lbs. (408kg) for shelves 60" (1524mm) long.
- Dunnage shelves are recommended for use on units with four posts.

Nominal Width (in.)	(mm)	Nominal Length (in.)	(mm)	Shelf with Grid Mat Model No.	Approx. Pkd. Wt. (lbs.)	(kg)	Shelf with Solid Mat Model No.	Approx. Pkd. Wt. (lbs.)	(kg)
18	457	36	914	MHP1836G	18	8.2	MHP1836F	22	10.0
18	457	48	1220	MHP1848G	22	10.0	MHP1848F	26	11.8
18	457	60	1524	MHP1860G	26	11.8	MHP1860F	30	13.6

Solid Mat Overlays

- Overlays snap onto the open grid mats to create a solid surface.
- Available for 21" (530mm) deep MetroMax Q shelves.

Fits Shelf (in.)	(mm)	Model No.	Approx. Pkd. Wt. (lbs.)	(kg)
21x24	530x610	Q2124SM	0.35	0.16
21x30	530x760	Q2130SM	0.45	0.20
21x36	530x914	Q2136SM	0.50	0.23
21x42	530x1060	Q2142SM	0.60	0.27
21x48	530x1220	Q2148SM	0.70	0.32
21x54	530x1372	Q2154SM	0.80	0.36
21x60	530x1524	Q2160SM	0.90	0.41
21x72	530x1829	Q2172SM	1.00	0.45

METROMAX Q™
POLYMER AND STEEL SHELVING

Standard Interchangeable Posts

- MetroMax Q: Epoxy coated steel with Microban antimicrobial product protection.
- MetroMax i: Polymer with Microban antimicrobial product protection.
- Stationary posts include an adjustable leveling foot to compensate for uneven floors. Leveling foot can be adjusted 1" (25mm).
- When mounting a shelving unit to a dolly base, stationary posts are used.
- Special height cut posts are available. Consult your Metro representative.

MetroMax Q Steel Post

MetroMax i Polymer Post

STATIONARY POST WITH LEVELING FOOT

Nominal Height (in.)	(mm)	Actual Height* (in.)	(mm)	MetroMax Q Steel Model No.	Approx. Pkd. Wt. (lbs.)	(kg)	MetroMax i Polymer Model No.	Approx. Pkd. Wt. (lbs.)	(kg)
13	370	14 3/4	375	MQ13PE	1.0	0.5	MX13P	0.5	0.2
27	685	28 3/4	730	MQ27PE	2.0	0.9	MX27P	0.9	0.4
33	875	34 3/4	883	MQ33PE	2.5	1.1	MX33P	1.0	0.5
54	1370	54 3/4	1391	MQ54PE	4.0	1.8	MX54P	1.6	0.7
63	1585	62 3/4	1594	MQ63PE	4.5	2.0	MX63P	1.8	0.8
74	1690	74 3/4	1899	MQ74PE	5.5	2.5	MX74P	2.2	1.0
86	2195	86 3/4	2203	MQ86PE	6.5	2.9	MX86P	2.5	1.1

POST FOR STEM CASTER

Nominal Height (in.)	(mm)	Actual Height* (in.)	(mm)	MetroMax Q Steel Model No.	Approx. Pkd. Wt. (lbs.)	(kg)	MetroMax i Polymer Model No.	Approx. Pkd. Wt. (lbs.)	(kg)
13	370	13 3/4	349	MQ13UPE	1.0	0.5	MX13UP	0.5	0.2
27	685	27 3/4	705	MQ27UPE	2.0	0.9	MX27UP	0.9	0.4
33	875	33 3/4	857	MQ33UPE	2.5	1.1	MX33UP	1.0	0.5
54	1370	53 3/4	1365	MQ54UPE	4.0	1.8	MX54UP	1.6	0.7
63	1585	61 3/4	1568	MQ63UPE	4.5	2.0	MX63UP	1.8	0.8
70	1778	69 3/4	1765	MQ70UPE	5.0	2.3			
74	1690	73 3/4	1873	MQ74UPE	5.5	2.5	MX74UP	2.3	1.0
86	2195	85 3/4	2178	MQ86UPE	6.5	2.9	MX86UP	2.5	1.4

Replacement Leveling Foot:
Model No. RPM3-FOOT

Replacement Post Cap for Steel Post:
Model No. RPMQS-POSTCAP

Replacement Post Cap for Polymer Post:
Model No. RPMXS-POSTCAP

Replacement MetroMax Q Wedges
Model No. MQ9985 Bag of 4

Replacement MetroMax Q Wedges MQ9985

NOTE: Compatibility with existing Metro polymer mat shelving systems
- MQ9985 wedges are compatible with original MetroMax Q shelves and posts.
- The post centers on MetroMax Q have been changed to allow interchangeability with MetroMax i™ shelves. MetroMax Q shelves manufactured within or after April 2009 are not compatible with Q shelves made prior to April 2009.
- MetroMax Q is not compatible with original MetroMax manufactured prior to April 2009.
- Posts listed in above table (ex. MQ74PE, MX74PE) can be used with original MetroMax Q shelves made prior to April 2009.

Post Clamp

Adds stability by joining posts of two separate units together. With it, each unit is supported by four posts and buttressed by the adjacent unit.
Model No. 9994X

Foot Plate

Use to add stability to the shelving unit or to bolt units to the floor.
Model No. Zinc 9993Z
Model No. Stainless Steel 9993S

Stem Casters

A variety of stem casters are offered for MetroMax i™ mobile applications.
Stem caster models include bumpers.

Replacement Bumper M9992DBX

Crabtree McGrath Associates, Inc.

Fuller Middle School
Framingham, MA

Item #: 23
Quantity: 2

BLODGETT®

MODEL DFG-200-ES

Full-Size Convection Oven

Project _____

Item No. _____

Quantity _____

DFG-200-ES

Extra depth baking compartment - accepts five 18" x 26" standard full-size baking pans in left-to-right or front-to-back positions.
All data is shown per oven section, unless otherwise indicated.

Refer to operator manual specification chart for listed model names.

EXTERIOR CONSTRUCTION

- Stainless steel front, top, and sides
- Dual pane thermal glass windows encased in stainless steel door frames
- Powder-coated door handle with simultaneous door operation
- Triple-mounted pressure lock door design with turnbuckle assembly
- Ball bearing slide out front control panel for easy servicing
- 1" solid block plus 1" mineral fiber insulation for a total of 2" of insulation

INTERIOR CONSTRUCTION

- Full angle-iron frame
- Double-sided porcelainized baking compartment liner (16 gauge)
- Stainless steel combustion chamber
- Single inlet blower wheel
- Five chrome-plated racks, eleven rack positions with a minimum of 1-5/8" (41mm) spacing
- Interior halogen lights

OPERATION

- Direct fired gas system
- Electronic spark ignition control system
- Removable inshot burners
- Internal pressure regulator
- Manual gas service cut-off switch located on the front of the control panel
- Solid state thermostat with temperature control range of 200°F (93°C) to 500°F (260°C)
- Two speed fan motor
- 3/4 horsepower blower motor with automatic thermal overload protection
- Control area cooling fan

STANDARD FEATURES

- SSD - Solid state digital control with LED display, Cook & Hold and Pulse Plus®
- 25" (635mm) adjustable stainless steel legs (for single units)
- 6" (152mm) adjustable stainless steel legs (for double sections)
- Three year parts and two year labor warranty
- Five year limited oven door warranty*

** For all international markets, contact your local distributor.*

OPTIONS AND ACCESSORIES
(AT ADDITIONAL CHARGE)

- **Legs/casters/stands:**
  - ❑ 6" (152mm) seismic legs
  - ✓ 6" (152mm) casters
  - ❑ 4" (102mm) low profile casters (double only)
  - ❑ 25" (635mm) stainless steel stand w/rack guides
  - ❑ 29" (737mm) stainless steel, fully welded open stand with pan supports
- **Controls:**
  - ✓ SSI-D - Solid state infinite control w/digital timer
  - ❑ SSI-M - Solid state infinite control w/manual timer
- **Gas hose w/quick disconnect restraining device:**
  - ❑ 48" (1219mm) hose
  - ❑ 36" (914mm) hose
- ❑ Stainless steel oven liner
- ❑ Extra oven racks
- ❑ Stainless steel solid back panel
- ❑ Gas manifold (for double sections)
- ❑ Prison package (includes security control panel and stainless steel back)
- ❑ Flue connector
- ❑ Direct vent

OPTIONS AND ACCESSORIES
(AT NO CHARGE)

- ❑ Solid stainless steel doors

Intertek

DFG-200-ES

APPROVAL/STAMP

DIMENSIONS ARE IN INCHES (MM)

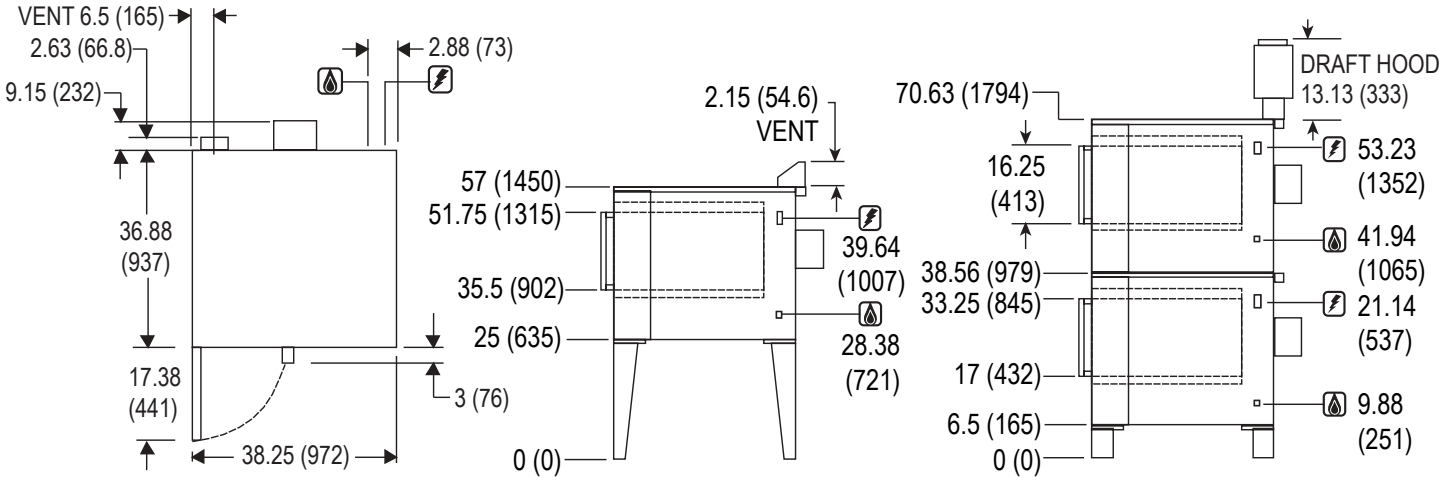

TOP VIEW SINGLE DOUBLE

SHORT FORM SPECIFICATIONS - Provide Blodgett full-size, bakery depth convection oven model DFG-200-ES, (single/double) compartment. Each compartment shall have porcelainized/stainless steel liner and shall accept five 18" x 26" standard full-size bake pans in left-to-right or front-to-back positions. Stainless steel front, top and sides. Doors shall be (solid stainless steel/dual pane thermal glass windows) with single powder-coated handle and simultaneous operation. Unit shall be gas heated with electronic spark ignition and shall cook by means of a direct fired system with a gas shutoff switch on the front of the control panel. Air in baking chamber distributed by single inlet blower wheel powered by a two-speed, 3/4 HP motor with thermal overload protection. Each chamber shall be fitted with two halogen lamps, five chrome-plated removable racks and removeable crumb trays. Control panel shall be recessed with solid state digital control with LED display, Cook & Hold and Pulse Plus. Provide three years parts, two year labor and five year door warranty. Provide options and accessories as indicated.

DIMENSIONS:

Floor space	38-1/4" (972mm) W x 36-7/8" (937mm) D
Product clearance	0" from combustible and non-combustible construction
Interior	29" (737mm) W x 20" (508mm) H x 28-1/4" (718mm) D

If oven is on casters:

Single	Add 4-1/2" (114mm) to all height dimensions
Double	Height dimensions remain the same
Double Low Profile	Subtract 2.5" (64mm) from all height dimensions

GAS SUPPLY:

3/4" NPT

Manifold Pressure:

- Natural – 3.5" W.C
- Propane – 10" W.C.

Inlet Pressure:

- Natural – 7.0" W.C. min. – 10.5" W.C. max.
- Propane – 11.0" W.C. min. – 13.0" W.C. max.

MAXIMUM INPUT:

Single	50,000 BTU/hr (14.6 Kw)
Double	100,000 BTU/hr (29.2 Kw)

POWER SUPPLY:

115 VAC, 1 phase, 8 Amp, 60 Hz., 2-wire with ground,
3/4 H.P., 2 speed motor, 1120 and 1680 RPM
6' (1.8m) electric cord set furnished on 115 VAC ovens only

230V CE model, 1 phase, 3 Amp, 50 Hz., 2-wire with ground, 1/2 H.P., 1 speed motor, 1440

Blodgett recommends a Pass & Seymour, model 2097, GFCI due to the use of a variable frequency drive. Must be hard wired in some cases.

MINIMUM ENTRY CLEARANCE:

Uncrated	32-1/16" (814mm)
Crated	37-1/2" (953mm)

SHIPPING INFORMATION:

Approx. Weight:

Single	590 lbs. (268 kg)
Double	1095 lbs. (497 kg)

Crate sizes:

37-1/2" (952mm) x 43-1/2" (1105mm) x 51-3/4" (1315mm)

NOTE: *The company reserves the right to make substitutions of components without prior notice*

Ultimate Restaurant Range 36" Series

Job _____ Item# _____

Standard Features

- Commercial gas range 36" wide with a 37" high cooking top
- 4"Stainless steel front rail, stainless steel front and sides
- Front located manual gas shut-off to entire range
- One year No Quibble, 24/7 parts and labor warranty
- Factory installed Regulator
- Four (4) removable, cast iron grate tops (rear holds up to 14" stock pot)
- Standing pilot for open top burners
- Battery spark ignition for oven bases

Optional 33K Non-clog Burners (Burner Option 1)

- (6) patented, one piece, lifetime clog free, cast iron burners
- 33,000 BTU NAT

Optional Wavy Grates (Burner Option 2)

- Cast bowl design for better efficiency
- Allows full use of entire range top
- Available only with 27K BTU Non-clog burners

Optional Cast Iron Star/Saute' Burners (Burner Option 3)

- (6) 33,000 BTU NAT star burners
- Port arrangement allows for even distribution of flame

Optional Split Burner Configuration (Burner Option 4)

- (3) Star/Saute' burners in front and (3) standard 33K burners in rear

Optional 5 Burner Configuration (Burner Options 5 and 6)

- Combine (2) Pyromax burners in the rear with either (3) standard 33K burners (Opt 5) or (3) star 33K burners (Opt 6) in the front

Optional Pyromax Burners (Burner Option 7)

- 40,000 BTU NAT
- PATENTED high output, three piece, easy clean Non-clog burner
- Built in port protection drip ring
- Group of 4 burners available

Optional Griddle Top (L or R)

- 12", 24" or 36" Available
- 1/2" thick cold rolled steel griddle plate
- Manual or thermostatically controlled

Optional Charbroiler (L or R)

- 24" or 36" Available
- Removable, cast iron grates

Configure your own custom spec sheet and model number at **www.BuildMyRange.com.** Refer to AutoQuotes for list pricing.

(4361D Shown)

Kitchen Innovations 2010 AWARD
NATIONAL RESTAURANT ASSOCIATION RESTAURANT, HOTEL-MOTEL SHOW

CONSTRUCTION SPECIFICATIONS

Exterior Finish: Stainless steel front, sides and shelf standard.

RangeTop:- 27" deep cooking surface. Center-to-center measurements between burners not less than 12", side-to-side or front-to-back. A removable one piece drip tray is provided under burners to catch grease drippings.

Flue Riser: 22.5" flue riser standard with heavy duty shelf. Optional 10" and 5" flue riser available without shelf.

Oven Door: Spring assisted, counterweight door.

Oven Interior: Double sided, full porcelain enamel oven cavity for superior cleanability and corrosion protection. Coved corners for easy cleaning and enhanced airflow eliminating hot/cold spots.

Legs: 6" stainless steel adjustable legs standard (casters optional)

Pressure Regulator: Factory installed.

Available Base Combinations

D, A, C, HxxxxD, HxxxxA

Standard Oven Models (D)

45,000 BTU NAT oven with standing pilot and thermostat range of 175^{0}F to 550^{0}F (79^{0}C to 288^{0}C). Porcelain enamel interior measuring 14" high x 26" wide x 26.5" deep. Full sized pans fit both ways. One rack with two position side rails.

Convection Oven Models (A):

32,000 BTU NAT convection oven with standing pilot and thermostat range of 175^{0}F to 550^{0}F (79^{0}C to 288^{0}C). Porcelain enamel interior measuring 14" high x 26" wide x 24" deep. Three racks with five position side rails. 1/2 hp, 1710 rpm, 60 cycle, 115V AC, high efficiency, permanent split phase motor with permanent lubricated ball bearings, overload protection and Class "B" insulation. On/Off switch to allow CO base to operate as a standard oven.

Stainless Steel Cabinet (C)

Stainless steel cabinet base. Optional no-charge doors that open from the center.

Hybrid Electric Standard Oven (HxxxxD)

4.5 kW electrically heated oven, with all the same base features of the gas standard oven at left (D).

Hybrid Electric Convection Oven (HxxxxA)

6 kW electrically heated oven, with all the same base features of the gas standard oven above (A).

Crabtree McGrath Associates, Inc.

Fuller Middle School
Framingham, MA

Item #: 25
Quantity: 1

Dimensions -in (mm)

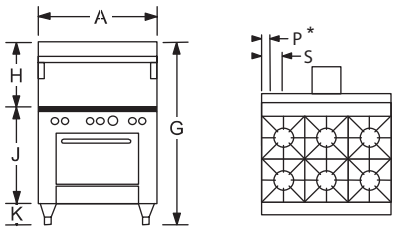

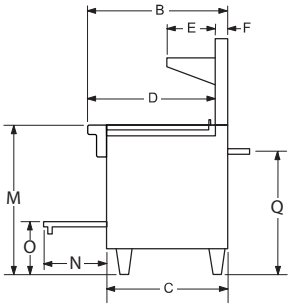

Ranges WITHOUT Convection Oven

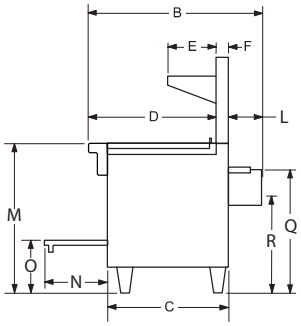

Ranges WITH Convection Oven

Models	Exterior											Cook Top	Door Opening	Oven Bottom	3/4" Gas Conn.		Electric	
	Width A	Depth B	C	D	E	F	G	H	J	K	L	M	N	O	P*	Q	R	S
436_D, H436_D	36.50" (927)	34.00" (864)	29.75" (756)	31.00" (787)	10.00" (254)	2.75" (70)	59.50" (1511)	22.50" (572)	31.00" (787)	6.00" (152)	-	37.00" (940)	15.50" (394)	13.00" (330)	3.25" (83)	30.25" (768)	-	-
436_A, H436_A	36.50" (927)	42.13" (1070)	29.75" (756)	31.00" (787)	10.00" (254)	2.75" (70)	59.50" (1511)	22.50" (572)	31.00" (787)	6.00" (152)	8.25" (210)	37.00" (940)	15.50" (394)	13.00" (330)	3.25" (83)	30.25" (768)	24.00" (610)	6.00" (152)

Models	Oven Interior			Crate Size			Cubic Volume	Crated Weight
	Width	Depth	Height	Width	Depth	Height		
436_D, H436_D	26.00" (660)	26.50" (673)	14.00" (356)	58.00" (1473)	48.00" (1219)	44.00" (1118)	70.9 cu. ft 2.01cu.m.	660 lbs. 300 kg.
436_A, H436_A	26.00" (660)	24.00" (610)	14.00" (356)					

*Gas Connection will be located on opposite side of optional griddle/charbroiler location (if optional griddle/charbroiler is located on the left, the gas connection will be moved to the right side).

Configure your own custom spec sheet and model number at **www.BuildMyRange.com.**
Refer to AutoQuotes for list pricing.

UTILITY INFORMATION

BTUs Each Burner	Std Non-Clog	Star/Saute'	Wavy Non-clog	Pyromax	(A) Cnv Oven per cavity	(D) Std Oven per cavity	Griddle 12"	Griddle 24"	Griddle 36"	Charbroiler 24"	Charbroiler 36"	Hot Top 12"
NAT	33K	33K	27K	40K	32K	45K	18K	48K	64K	64K	96K	24K
LP	24K	24K	24K	31K	30K	40K	18K	48K	64K	64K	96K	24K

GAS:
- One 3/4" female connection.
- Required minimum inlet pressure
  - Natural gas 7" W.C.
  - Propane gas 11" W.C.

ELECTRICAL: (for Gas models with convection ovens)
- Standard -115/60/1 furnished with 6' cord with 3-prong plug. Total max amps 5.9 per convection oven base.
- Optional -208/60/1, 50/60/1 phase. Supply must be wired to junction box with terminal block located at rear. Total max amps 2.7.

ELECTRICAL: (For Optional Hybrid Electric Ovens)
H436_D - 208/60/1- 39 amps, 220/60/1-37 amps, 240/60/1-34 amps
H436_A - 208/60/1-32 amps, 220/60/1-31 amps, 240/60/1-27 amps

MISCELLANEOUS

- If using Flex-Hose, the I.D. should not be smaller than 3/4" and must comply with ANSI Z 21.69.
- If casters are used with flex hose, a restraining device should be used to eliminate undue strain on the flex hose.
- For installation on combustible floors 6" high legs or casters are required. Minimum clearance from combustible construction is 10" on sides and rear for all units except charbroilers. Charbroiler units are for use in noncombustible locations ONLY.
- Rear clearance to noncombustible construction is 10" for charbroilers and 0" for all other tops and bases. Side clearance to noncombustible constructions is 0" on all units.
- Recommended - Install under vented hood.
- Check local codes for fire, installation and sanitary regulations.
- If the unit is connected directly to the outside flue, an A.G.A approved down draft diverter must be installed at the flue outlet of the oven.
- Two speed motors are not available on Restaurant Range Convection Ovens.

NOTICE: Southbend has a policy of continuous product research and improvement. We reserve the right to change specifications and product design without notice. Such revisions do not entitle the buyer to corresponding changes, improvements, additions or replacements for previously purchased equipment.

OPTIONS AND ACCESSORIES

- ☐ 5" flue riser
- ☐ 10" Flue Riser
- ☑ 3/4" quick disconnect with flexible hose complies with ANSI Z 21.69 (specify 3ft, 4ft, 5ft)
- ☑ Casters-all swivel-front with locks
- ☐ Hot Top plate - plate replaces 2 Open burners
- ☐ Cabinet base doors (No Charge)
- ☐ Extra Oven Racks
- ☐ Various salamander & cheesemelter mounts available. (Please refer to the price list)
- ☐ Rear step up burners
- ☑ Flame Failure available (Contact factory for available model numbers)
- ☑ Battery spark ignition for open tops, charbroilers, griddles and hot tops

INTENDED FOR COMMERCIAL USE ONLY.
NOT FOR HOUSEHOLD USE

Crabtree McGrath Associates, Inc.

Fuller Middle School
Framingham, MA

Item #: 25
Quantity: 1

G — SIRIUS II DOUBLE GAS BOILERLESS CONVECTION STEAMER

JOB NAME: _____
ITEM NO.: _____
NO. REQUIRED: _____

FOOD SERVICE EQUIPMENT
Gas Boilerless Steamer

MODELS

- ❑ **Sirius II-8** - two Sirius II-4 (four pan) steamers
- ☑ **Sirius II-10** - one Sirius II-4 (four pan) and one Sirius II-6 (six pan) steamer
- ❑ **Sirius II-12** - two Sirius II-6 (six pan) steamers

DESCRIPTION

Sirius II is a Market Forge convection/ circulating boilerless steam oven with automatic water-fill, featuring internally preheated water for fast recovery, clean water reservoir system, and rear drain. Sirius II models are efficiently heated by a burner external to the water reservoir. Sirius II steamers use 27,000 BTU per compartment.

COOKING COMPARTMENT

Operation occurs from steam generated in the cooking compartment. The walls and ceiling of the cooking compartment are heated to reduce steam condensation and to reheat and revitalize partially condensed steam. The steamer cavity has a convection fan to increase steam velocity and provide efficient steam distribution throughout the cavity. Steam is pulled past the cooking pans, then forced against the heated cooking chamber walls to be reheated. The cooking compartment is constructed of cast aluminum with a food-grade non-stick hard anodized finish. The compartment acts as a heat sink, allowing for heat retention, quick recovery, and reduced energy consumption.

STANDARD FEATURES

Controls:

- 4-Position cooking mode selector: OFF and 3 mode steaming - soft poach, traditional steam, high heat steam: or can be set to custom specifications up to 230°F (110°C)
- Clean probe indicator light
- Heating indicator light
- 60-minute timer
- Pulls out for easy service access

Construction:

- 304 Stainless, #4 finish (Cabinet)
- 356 Aluminum cast cooking compartment with hard-anodized finish

Insulated Doors:

- Safety shut-offs are provided by a hidden magnetic door switch, low water/high limit heat switch, temperature probe, water sensing probe and water-fill timer

Other:

- Manual front drain valve
- Internally preheated incoming water for quick recovery
- Redundant safety systems
- One-year parts and service

Sirius II-8 | Sirius II-10 | Sirius II-12

SHIPPING WEIGHT

- **Sirius II-8** - 450 lbs (204 kg)
- **Sirius II-10** - 475 lbs (215 kg)
- **Sirius II-12** - 500 lbs (227 kg)

OPTIONS & ACCESSORIES
(at additional charge)

- **Pans & Covers**
  - ❑ 12" x 20" pan cover
  - ❑ 12" x 20" x 1" solid pan
  - ❑ 12" x 20" x 1" perforated pan
  - ❑ 12" x 20" x 2-1/2" solid pan
  - ❑ 12" x 20" x 2-1/2" perforated pan
  - ❑ 12" x 20" x 4" solid pan
  - ❑ 12" x 20" x 4" perforated pan
  - ❑ 12" x 20" x 6" solid pan
  - ❑ 12" x 20" x 6" perforated pan
- **Stands, Racks & Casters**
  - ❑ MSS - Mobile stand w/slide out shelf and under shelf
  - ❑ SSS - Stationary stand w/slide out shelf and under shelf
  - ❑ STSS - 12" tall stationary stand (Sirius II-8 only)
  - ❑ STSM - 16-5/8" tall mobile stand (Sirius II-8 only)
  - ❑ Pan rack assembly for MSS and SSS
  - ❑ Set of 4 casters, 2 with brakes
- **Quick Disconnect Gas Hose**
  - ❑ 48" long
  - ❑ 60" long
- ❑ Prison package, includes lockable stainless steel hinged control cover, tamper proof screws, (2) 4" adjustable front flanged feet
- ❑ Heat and water side shield
- ❑ Water hose kit - 60" line with quick disconnect

Intertek | NSF | ENERGY STAR | MARKET FORGE WORLDWIDE

Crabtree McGrath Associates, Inc.

Fuller Middle School
Framingham, MA

Item #: 26
Quantity: 2

G SIRIUS II DOUBLE GAS BOILERLESS CONVECTION STEAMER

DETAILS & DIMENSIONS

FOOD SERVICE EQUIPMENT
Gas Boilerless Steamer

SPECIFICATIONS

	Sirius II-8	Sirius II-10	Sirius II-12
Voltage	120V	120V	120V
BTU's	27,000	27,000	27,000
Gas NPT	1/2"	1/2"	1/2"

GAS PRESSURE & CONNECTION

- Natural - 3.5" WC required, not to exceed 13.5"
- Propane - 9" WC required, not to exceed 13.5"
- Gas pipe size: 1/2" NPT required as a minimum

CAPACITY

Pans	Sirius II-8	Sirius II-10	Sirius II-12
12" x 20" x 2.5"	8	10	12
12" x 20" x 4"	4	6	8
12" x 20" x 6"	2	3	4

WATER SUPPLY & DRAIN

Good quality water feed is the responsibility of the owner. Water quality must be within the following general guidelines.

TDS: 40-125 ppm Hardness: 35-100 ppm pH: 7.0 - 8.5
Silica: <13 ppm Chlorides: <25 ppm Chlorine: <0.2 ppm
Chloramine: <0.2 ppm

The best defense against poor water quality is a water treatment system designed to meet your water quality conditions.

Pressure: 25(min)-50(max) PSI
Connections: Trough drain: 1/2 MNTP Drain out: 1" FNPT
Water: 3/4" male garden hose

Appliance to be installed with backflow protection according to federal, state or local codes.

The drain piping must consist of temperature resistant material, greater than 160°F, and be of adequate diameter not to cause flow restriction. Improper materials may deform and cause restrictions, thus affecting performance.

NOTES

- Each single compartment has a separate rear exiting drain plumbed directly into the stacked steamers main drain/vent line.
- 4" clearance left mandatory, right and rear is recommended.
- Location near a floor drain is recommended.
- 4" stacking collar between units (included when ordered)
- Single and stacked units require hood for ventilation of flue products
- Each compartment requires separate power, gas & water connection.

DIMENSIONS ARE IN INCHES [MM]

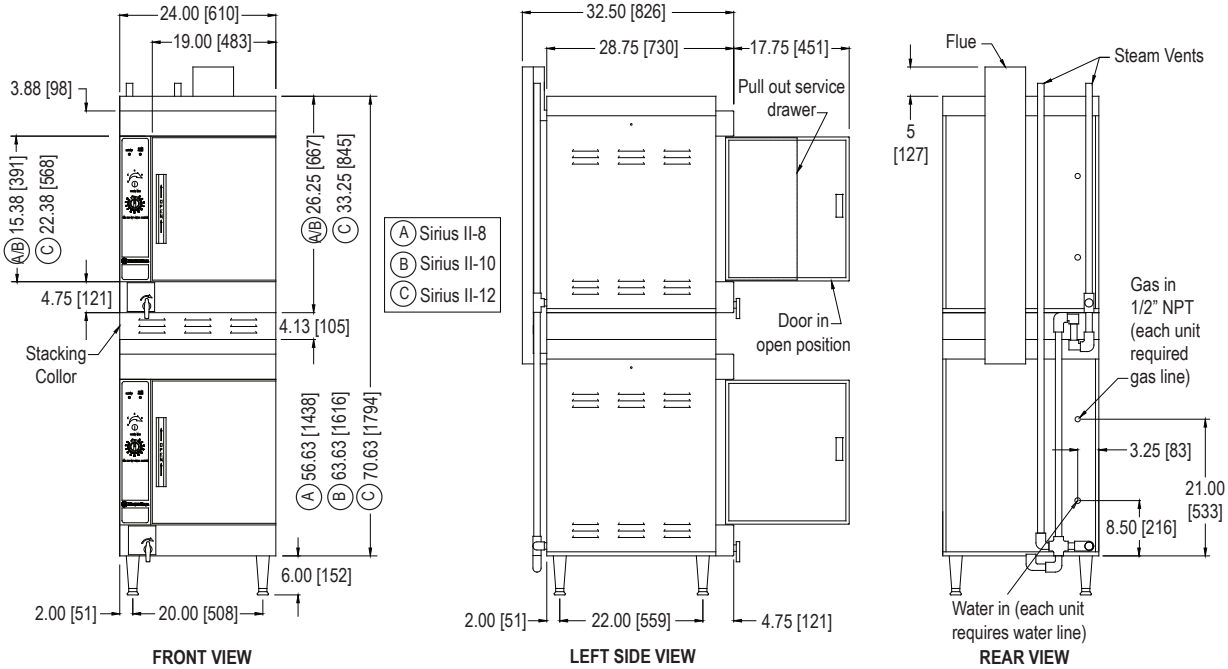

FRONT VIEW LEFT SIDE VIEW REAR VIEW

The manufacturer reserves the right to modify materials and specifications without notice.

MARKET FORGE

PRINTED IN U. S. A.
SPEC SHEET: 14-0073 Rev G (1/17)

Crabtree McGrath Associates, Inc.

Fuller Middle School
Framingham, MA

Item #: 26
Quantity: 2

Aqua-Pure® COMMERCIAL PRODUCTS

Add SF18-S scale feeder cartridge

MODELS:

SF165

Aqua-Pure® Commercial Series

SPEC #

QUANTITY

APPLICATION

SCALE CONTROL

AT A GLANCE

Aqua-Pure® ScaleGard HT provides consistent Recipe Quality Water® with reduced sediment and chlorine taste and odor. Operating cost savings from the controlled and metered addition of scale-inhibitors reduces the ability of calcium and magnesium to precipitate as hard scale in both high and low-temperature applications, including ice machines, coffee, tea, espresso brewers, and steamers*.

- ScaleGard HT, SF165 combines chlorine taste and odor reduction with sediment reduction, and protection from the harmful effects of scale formation at flow rates to 3.34 gpm (12.6 lpm) for 35,000 gallons (132,000 liters).

PRODUCT BENEFITS

- Reduced sediment and chlorine for equipment protection and great tasting hot and cold beverages and ice.
- A forced-feed orifice carefully controls and meters the addition of a proprietary scale inhibitor to reduce scale build-up on evaporator plates and heating coils.
- Unmatched scale reduction performance in equipment from ice mahines to equipment heating water to temperatures over 200°F (93°C). (not tested or certified by NSF)
- Revolutionary dual-zone **I**ntegrated **M**embrane **P**re-**A**ctivated **C**arbon **T**echnology ("**IMPACT**") filtration media combines a membrane in series with premium activated carbon to provide superior throughput and cartridge life.
- Certified by NSF to Standard 42 for Class 1 sediment reduction and chlorine taste and odor reduction.
- SQC - Sanitary Quick Change - encapsulated water cartridge design allows for fast and easy change-outs with a 1/4 turn while minimizing the possibility of leakage and contamination.
- FDA CFR-21 and/or NSF compliant materials provide assurance of safety.
- 3/4" FNPT inlet and outlet ports allow direct or easily-adaptable connections to existing plumbing lines.
- System includes a pressure gauge, inlet shut-off valve, and outlet check valve for simple installation and operation.
- Exhausted cartridges may be incinerated.

PRODUCT SPECIFICATIONS

Model Number	Part Number	Reduction Claims	Micron Rating	Capacity	Service Flow Rate	Application	Replacement Cartridge	Sizing
SF165	56186-01	Sediment, Chlorine Taste & Odor, Scale	3	35,000 gallons (132,000 liters)	3.34 gpm (12.6 lpm)	Normal to Hard Water	HF65 56134-07 HF8-S 55821-06 Cartpak 56138-11	Ice: Cubers to 1200 lbs (544 kg); Flakers to 2400 lbs (1089 kg). Coffee Brewers and Steamers to demand flow rates of 3.34 gpm (12.6 lpm)

* Periodic acid de-liming of heating coils is recommended for steamer applications

CUNO

Crabtree McGrath Associates, Inc.

Fuller Middle School
Framingham, MA

Item #: 27
Quantity: 2

Aqua-Pure® Commercial Products

SPEC #

QUANTITY

MODEL NUMBER

PART NUMBER

Aqua-Pure® COMMERCIAL PRODUCTS

SF165

PHYSICAL SPECIFICATIONS

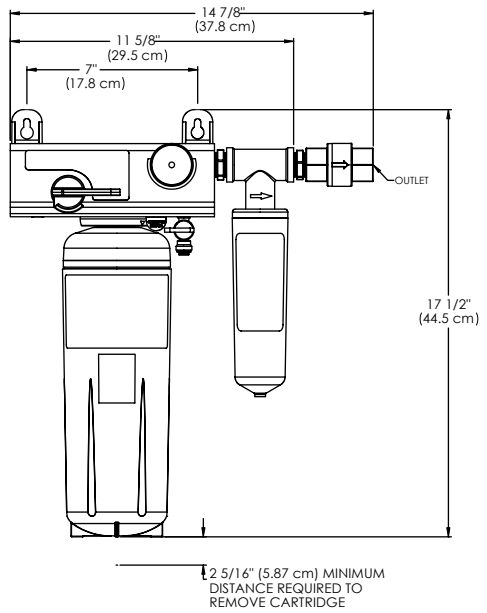

- System includes a manifold with built-in pressure gauge, inlet water shut-off valve, outlet check valve, mounting bracket, the cartridge filter, and the scale-feeding system
- Inlet and outlet plumbing connections are 3/4" FNPT.
- Water cartridge is double o-ring seal type; scale feeder cartridge is single o-ring seal type.
- System maximum operating pressure of 125 psi (862 kPa) and a maximum operating temperature of 100°F (38°C).
- Recommended service flow rate is up to 3.34 gpm (12.6 lpm).
- Filter cartridge incorporates carbon block media protected by a pleated pre-filter membrane.
- The scale inhibitor, sumps, and filtration media are CFR-21 and/or NSF Standard 42 compliant
- Cartridges are sanitary in design, requiring no contact with the filter media during cartridge change-out.
- Filter cartridge requires no pre-activation.
- A NSF Performance Data Sheet (pds) is included.
- Shipping weight: 6 lbs (2.7 kg).
- Operating weight: 12 lbs (5.4 kg).

IMPORTANT: Do not use with water that is microbiologically unsafe or of unknown quality without adequate disinfection before or after the system. Systems certified for cyst reduction may be used on disinfected water that may contain filterable cysts. EPA Establishment Number 070595-CT-001.

"CAUTION" To reduce the risks accocoiated with water leakage, which if not avoided, may result in property damage - check with your plumbing professionalto verify that water preassure is less than 125 psi (862 kPa).

CUNO Incorporated recommends regularly scheduled maintenance and replacement of the filter cartridge(s) in order for the product to perform as advertised/sold. **Change the filter cartridge at least every 6 months.** CUNO shall not be liable for system failures due to improper maintenance.

INSTALLATION TIPS

- Shut off downstream equipment prior to installation of the system.
- Choose mounting location to support full system weight when operating.
- Do not exceed operating parameters for temperature or pressure.
- Do not install outdoors.
- For commercial use only.
- Install on cold water line only.

LIMITED 5 YEAR WARRANTY

CUNO makes no guarantees or warranties, expressed or implied, including, but not limited to, any implied warranty of merchantability or fitness for a particular purpose or implied warranty arising out of a course of dealing, custom, or usage of trade whatsoever with respect to these instructions. CUNO shall not under any circumstances be liable to the recipient of these instructions for any direct, indirect, special, incidental, or consequential loss or damages (including, but not limite to, loss of profits, revenue, business, opportunity, or goodwill) resulting from or in any way related to these instructions or the recipient's non-adherence to these instructions, regardless of the legal or equitable theory under which such loss or damages are sought, including breach of warranty or contract, negligence or strict liability.

NSF

Visit www.nsf.org for the claims associated with products that are NSF listed.

CUNO® a 3M company

3M

CUNO Incorporated
400 Research Parkway
Meriden, CT 06450, USA

Crabtree McGrath Associates, Inc.

Fuller Middle School
Framingham, MA

Item #: 27
Quantity: 2

The ND-2 Series is a Type I, Wall Canopy Hood for use over 450°F, 600°F and 700°F cooking surface temperatures. The aerodynamic design includes a mechanical baffle and performance enhancing lip for exceptional capture and containment.

Fully Integrated Package

CaptiveAire sells this hood as a stand-alone appliance to be integrated into a kitchen ventilation application, or provided as part of a FULLY INTEGRATED PACKAGE designed by CaptiveAire and pre-engineered for optimum performance. The package consists of the hood, an integral utility cabinet, factory pre-wired electrical controls, and a listed fire suppression system. Other options include a listed exhaust fan, a listed make-up air unit and listed, factory-built ductwork.

Advantages

- **Exhaust Flow Rates:** Superior exhaust flow rates. A 4' Hood can operate at 150 CFM/ft or 600 total CFM. Available in single or back-to-back configurations.
- **ETL Listed:** ETL Listed for use over 450°F, 600°F and 700°F cooking surface temperatures, which provides flexibility in designing kitchen ventilation systems. ETL Listed to US and Canadian safety standards, ETL Sanitation Listed and built in accordance with NFPA 96.
- **Capture and Containment:** Insulated, double-wall rigid front has aerodynamic design that reduces radiant heat into kitchen, prevents condensation and provides exceptional capture and containment of cooking vapors. This is accomplished with the signature ND-2 "mechanical baffle" on the front of the hood's capture area and the "C-shaped" design of the hood's capture area. Mechanical baffle provides a built-in wiring chase for optimal positioning of electrical controls and outlets on the front face of the hood without penetrating capture area or requiring external chase way.
- **Convenient Design:** Factory pre-wired lighting to illuminate the cooking surface is accessible from the bottom of the hood. Fitted with UL Listed, pre-wired, incandescent light fixtures and tempered glass globes to hold up to a standard 100

- **Construction:** Polished stainless steel on the interior and exterior of the front enhance aesthetics. Fully welded and polished front corners. Fabricated from Type 430 stainless steel with option of Type 304 available.
- **Channels:** Hood comes standard with structural channels on top and wrapper channels on the bottom.
- **Grease Extraction:** All hoods come standard with stainless steel baffle filters and a deep grease trough which allows for easy cleaning. Captrate Combo® and Captrate Solo® filters are optional. Grease drain system with removable 1/2 pint cup for easy cleaning. Standard filter stops eliminate gaps between filters.
- **Reduced Lead Times and Shipping Costs:** Produced on a high volume assembly line at one of five manufacturing facilities to reduce lead times and shipping costs.
- **Clearance to Combustibles:** Standard built in 3" rear standoff to meet NFPA 96 requirements, when installed in a wall application.
- **Controls:** Hoods can be equipped with modular utility cabinets and end standoffs. Optional listed light and fan control switches flush mounted and pre-wired through electrical chase way.
- **Optional Make-Up Air:** Up to 80% make-up air can be supplied through optional front and/or side plenums (ND-2 Series with PSP or AC-PSP Accessory).
- **Reduced Weight:** Rigid single wall end panels reduce weight.

Performance

AVG. COOKING SURFACE TEMP. (°F)	CONFIGURATION	MIN. EXHAUST CFM / FT.
450°F - Ovens, Steamers, Kettles, Open-Burner Ranges, Griddles, Fryers	Single Wall Hood 2 Wall Hoods Back-to-Back	150 300
600°F - Gas Charbroilers, Electric Charbroilers, Woks	Single Wall Hood 2 Wall Hoods Back-to-Back	200 400
700°F - Mesquite Grills, Charcoal Charbroilers, Wood Burning Appliances	Single Wall Hood 2 Wall Hoods Back-to-Back	250 500

Recommended Duct Sizing: Exhaust - Based on 1500 FPM

Features

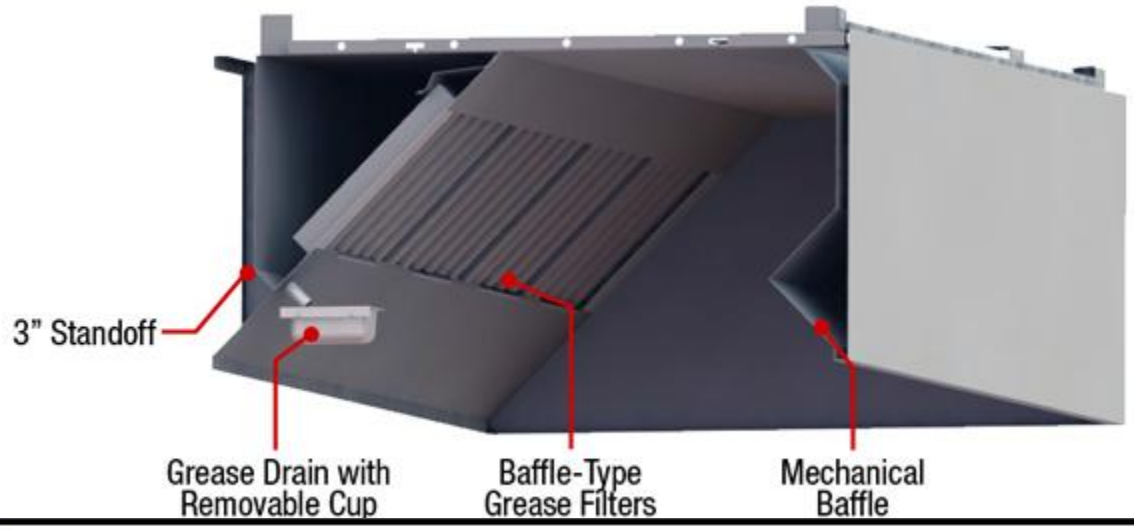

Options

Utility Cabinet: Listed for integral side mount and fabricated of same material as hood. Cabinet can house listed fire suppression system and listed, pre-wired electrical controls.

Front Perforated Supply Plenum: Provides low velocity make-up air for the kitchen and is discharged in front of the hood. Perforated diffuser plates allow for even air distribution and supply riser includes a volume damper for easy balancing. Side Perforated Supply Plenums can be added to optimize the air flow if necessary.

Rear Make-Up Air Plenum: Provides make-up air for the kitchen and is discharged below cooking equipment. Provides required clearance from limited combustibles per NFPA 96 Standards.

Enclosure Panels: Constructed of stainless steel. Sized to extend from hood top to ceiling, enclosing pipe and hanging parts.

End Panels: Should be used to maximize hood performance and eliminate the effects of cross drafts in kitchen. units constructed of stainless steel and sized according to hood width and cooking equipment. Exposed edges hemmed for safety and rigidity.

Roof Top Package: Combination ETL Listed exhaust/supply air unit with factory prewired and mounted motors, trunkline and curb vented on exhaust side.

Separate Exhaust and/or Make-Up Air Fans: ETL Listed single exhaust fans and supply-air fans and curbs available.

Fire Suppression System: UL 300 fire suppression system.

Lighting: Recessed Incandescent, Recessed Fluorescent, Compact Fluorescent, LED, Recessed LED, Halogen

Certifications

The ND-2 Model has been certified by ITS. This certification mark indicates that the product has been tested to and has met the minimum requirements of a widely recognized (consensus) U.S. and Canadian products safety standard, that the manufacturing site has been audited, and that the applicant has agreed to a program of periodic factory follow-up inspections to verify continued performance.

Models ND-2 are ETL Listed under file number 3054804-001 and complies with UL710, ULC710 and ULC-S646 Standards.

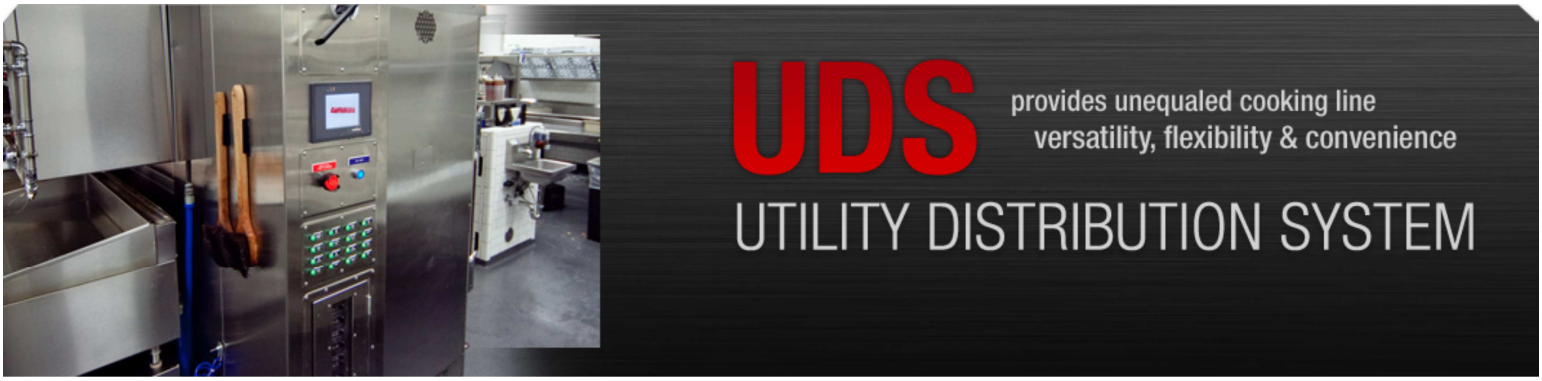

One connection for all your utility needs

The CaptiveAire Utility Distribution System (UDS) is designed to meet all electrical and plumbing requirements for your kitchen appliances. A two compartment raceway houses the plumbing and electrical connections needed to meet your specific application.

Available Models

- **UDI:** Island configuration with equipment connections on both sides
- **UDW:** Wall mounted with equipment connections on one side only

Key Advantages

The Utility Distribution System allows greater flexibility over conventional utility connections and offers a cost-effective way to replace the custom designed wall built by contractors. Additional capacity for new equipment is provided with spare connection points built into the unit. Adding or changing equipment requires minimal effort.

- **Electrical Riser:** Main power connection is made to the main circuit breaker which has a shunt trip and is mounted in the electrical riser.
- **Bus bar systems:** Electrical power is fed through the main circuit breaker to the bus bar system in the raceway. Each appliance is fed from the bus bar through individually sized circuit breakers located along the raceway.
- **Wireway systems:** Electrical power is fed through a main circuit breaker to a distribution panel which contains individual branch breakers. Each appliance is fed from the individual breakers which are wired to each receptacle located along the raceway.
- **Plumbing Riser:** The plumbing riser houses manual (quarter-turn) shut-off valves for each incoming main supply line

Product Features

- **Expandability:** All plumbing manifolds are provided with multiple plumbing stubs for future use. All electrical systems are designed for additional capacity for future expansion or upgrade of connected appliances.
- **Bus Bar Systems:** Individual circuit breakers mounted on interchangeable plates for ease of service and relocation.
- **Wireway:** Electrical distribution panel located in the riser is equipped with branch circuit breakers and sized for expansion.
- **Serviceability and Accessibility:** Lift out doors provide easy access to risers without moving cooking equipment. Removable panels provided along the length of the raceway allow access to either plumbing or electrical compartments.
- **Electric Outlook and Cord Sets:** All outlets are provided with moisture resistant covers and have been sized per NEMA standards. Each is supplied with a matching cord and plug set if these are not already supplied by the equipment manufacturer. Twist-lock sets are standard with the model UDI. Straight blade sets are standard with the model UDW.
- **Main Disconnect:** One point disconnect through a main circuit breaker equipped with a 120 VAC rated shunt trip provided in the riser.
- **Gas Solenoid Valve:** Electrical or Mechanical. Electrical valves provided with a manual reset button.
- **Shunt Trip:** Provided with each main breaker.
- **Appliance Protection:** Each electrical outlet connection is protected with an individual circuit breaker.
- **Dual Convenience Outlets:** Located at each riser with integral ground fault protection.
- **Fire/Fuel Shutoff:** In compliance with NFPA 96, terminal connection points provided for field wiring to the fire protection system to shut off fuel sources and power in the event of a fire.
- **CAD:** Customized CAD Drawings Provided

Product Options

- **Remote Status Indicator Panel:** Lighted panel indicates status of breakers in wireway system.
- **Electric Outlets & Cord Sets:** Water tight pin and sleeve outlets and cords.
- **Light & Fan Switches:** located in riser.
- **Hood Control Panel:** built into riser.
- **Ground Fault Protection**
- **Prison Package**
- **Bumper Strips**
- **Emergency Kill Switch:** Single point shutdown of electrical power and electrical gas valves.
- **Swivel Connectors:** for gas equipment.
- **Plumbing Fixtures:** Pre-plumbed and installed faucets, mixing valves, hose reels.
- **Cable Restraints:** Available for mobile equipment.
- **Hinged Doors:** for internal access to risers.
- **Temperature/Pressure Gauges:** for hot/cold water main.

Electrical

Bus Bar Systems: The electrical raceway shall be a four (4) conductor copper bus bar system having balanced load and phases and shall be completely isolated from the plumbing supply manifolds. Point of use circuit breakers shall be mounted on connection plates which are located on the peaked top of the raceway and protected by a water proof stainless steel hinged cover. The breakers shall be easily accessible to the operator. The connection plates shall be easily interchangeable with spare blank plates which shall be provided for future expansion or changes. A main circuit breaker with a built-in 120 VAC rated shunt trip shall be furnished in the electrical riser and require a single point incoming connection. Terminal block connections shall be provided for field interconnection between the shunt trip and the fire protection system for power shut-off in the event of a fire.

Wireway Systems: The electrical system shall consist of a main circuit breaker which feeds power to a distribution panel located in the electrical riser containing individual branch breakers. Each

in the event of a fire. All outlets shall be equipped with grounding type receptacles having specific NEMA polarized configurations and located on the under side (Model UDI) or front side (Model UDW) of the raceway at each equipment location. Outlets are matched to the cord and plug sets supplied with equipment. On the Model UDI, twist lock cord and plug sets are provided for equipment supplied without cords. On the Model UDW, straight blade cord and plug sets are provided for equipment supplied without cords.

Main Circuit Breaker:
15 to 600 Ampere, 1 or 3 phase
120, 208, or 480 VAC System

Branch Circuit Breaker: 15 to 100 Ampere, 1 or 3 phase
120, 208, or 408 VAC System

Plumbing

The plumbing compartment shall be completely isolated from the electrical with all piping labeled. Hot and cold water and steam supply and return manifolds shall be insulated. All incoming service connections shall be provided with 1/4 shut-off valve. Each branch connection shall be provided with 1/4 shut-off valve, color coded, and located at each equipment location. Color coded quick disconnect hoses are provided for connection to equipment. Hot and cold water piping, including branch connections, shall be type "L" copper tubing. All fittings will be copper sweat soldered (95-5 type). Gas and steam piping, including branch connections, shall be threaded black iron. There shall be a drip tee on the incoming gas end. The gas manifold shall be furnished with either an electrical or mechanical gas valve which shall be field interlocked with the fire protection system to shut off fuel sources in the event of a fire. Electrical gas valves shall be furnished with a manual gas reset button located in the UDS riser. Gas manifolds are sized for an inlet pressure of 7" WC for natural gas or 11" WC for LP. All plumbing components are UL, AGA and MA approved.

Gas

Manifold (single or looped): 3/4" to 3" IPS
1/4 turn manual shut-off valve on manifold
Quick disconnect hoses: 1/4" to 1-1/4", up to 6' long
Quick disconnect fittings: 1/4" to 1-1/4" with 1/4 shut-off valves

Hot & Cold Water

Manifold: 3/4" to 1" IPS
1/4 turn manual shut-off valve on manifold
Quick disconnect hoses: 1/4" to 1", up to 6' long
Quick disconnect fittings: 1/4" to 1" with 1/4 shut-off valves
Steam Supply/Steam Return
Steam Manifold: 3/4" to 3" IPS
Condensate Return Manifold: 3/4" to 2" IPS
1/4 turn manual valves on manifolds
Quick disconnect hoses: 1/4" to 1-1/4", up to 6' long
Quick disconnect fittings: 1/4" to 1-1/4" with 1/4 shut-off valves

Compressed Air

Manifold: 1/2" to 3/4" IPS
1/4 turn manual shut-off valve on manifold
Quick disconnect hoses: 1/4" to 1/2", up to 6' long
Quick disconnect fittings: 1/4" to 1/2" with 1/4 shut-off valves

Certifications

The UDS Model has been certified by ITS. This certification mark indicates that the product has been tested to and has met

Model UDS is ETL Listed under file number 3054803-001 and complies with UL891 Standards and CSA C22.2, No. 31-M89 Standards.

The ND-2 Series is a Type I, Wall Canopy Hood for use over 450°F, 600°F and 700°F cooking surface temperatures. The aerodynamic design includes a mechanical baffle and performance enhancing lip for exceptional capture and containment.

Fully Integrated Package

CaptiveAire sells this hood as a stand-alone appliance to be integrated into a kitchen ventilation application, or provided as part of a FULLY INTEGRATED PACKAGE designed by CaptiveAire and pre-engineered for optimum performance. The package consists of the hood, an integral utility cabinet, factory pre-wired electrical controls, and a listed fire suppression system. Other options include a listed exhaust fan, a listed make-up air unit and listed, factory-built ductwork.

Advantages

- **Exhaust Flow Rates:** Superior exhaust flow rates. A 4' Hood can operate at 150 CFM/ft or 600 total CFM. Available in single or back-to-back configurations.
- **ETL Listed:** ETL Listed for use over 450°F, 600°F and 700°F cooking surface temperatures, which provides flexibility in designing kitchen ventilation systems. ETL Listed to US and Canadian safety standards, ETL Sanitation Listed and built in accordance with NFPA 96.
- **Capture and Containment:** Insulated, double-wall rigid front has aerodynamic design that reduces radiant heat into kitchen, prevents condensation and provides exceptional capture and containment of cooking vapors. This is accomplished with the signature ND-2 "mechanical baffle" on the front of the hood's capture area and the "C-shaped" design of the hood's capture area. Mechanical baffle provides a built-in wiring chase for optimal positioning of electrical controls and outlets on the front face of the hood without penetrating capture area or requiring external chase way.
- **Convenient Design:** Factory pre-wired lighting to illuminate the cooking surface is accessible from the bottom of the hood. Fitted with UL Listed, pre-wired, incandescent light fixtures and tempered glass globes to hold up to a standard 100

- **Construction:** Polished stainless steel on the interior and exterior of the front enhance aesthetics. Fully welded and polished front corners. Fabricated from Type 430 stainless steel with option of Type 304 available.
- **Channels:** Hood comes standard with structural channels on top and wrapper channels on the bottom.
- **Grease Extraction:** All hoods come standard with stainless steel baffle filters and a deep grease trough which allows for easy cleaning. Captrate Combo® and Captrate Solo® filters are optional. Grease drain system with removable 1/2 pint cup for easy cleaning. Standard filter stops eliminate gaps between filters.
- **Reduced Lead Times and Shipping Costs:** Produced on a high volume assembly line at one of five manufacturing facilities to reduce lead times and shipping costs.
- **Clearance to Combustibles:** Standard built in 3" rear standoff to meet NFPA 96 requirements, when installed in a wall application.
- **Controls:** Hoods can be equipped with modular utility cabinets and end standoffs. Optional listed light and fan control switches flush mounted and pre-wired through electrical chase way.
- **Optional Make-Up Air:** Up to 80% make-up air can be supplied through optional front and/or side plenums (ND-2 Series with PSP or AC-PSP Accessory).
- **Reduced Weight:** Rigid single wall end panels reduce weight.

Performance

AVG. COOKING SURFACE TEMP. (°F)	CONFIGURATION	MIN. EXHAUST CFM / FT.
450°F - Ovens, Steamers, Kettles, Open-Burner Ranges, Griddles, Fryers	Single Wall Hood 2 Wall Hoods Back-to-Back	150 300
600°F - Gas Charbroilers, Electric Charbroilers, Woks	Single Wall Hood 2 Wall Hoods Back-to-Back	200 400
700°F - Mesquite Grills, Charcoal Charbroilers, Wood Burning Appliances	Single Wall Hood 2 Wall Hoods Back-to-Back	250 500

Recommended Duct Sizing: Exhaust - Based on 1500 FPM

Features

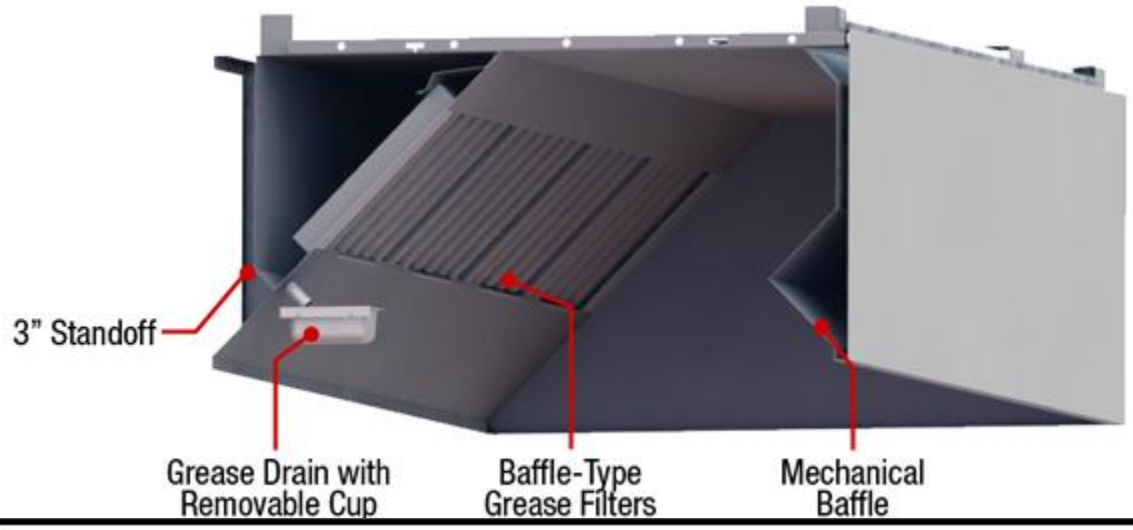

Options

Utility Cabinet: Listed for integral side mount and fabricated of same material as hood. Cabinet can house listed fire suppression system and listed, pre-wired electrical controls.

Front Perforated Supply Plenum: Provides low velocity make-up air for the kitchen and is discharged in front of the hood. Perforated diffuser plates allow for even air distribution and supply riser includes a volume damper for easy balancing. Side Perforated Supply Plenums can be added to optimize the air flow if necessary.

Rear Make-Up Air Plenum: Provides make-up air for the kitchen and is discharged below cooking equipment. Provides required clearance from limited combustibles per NFPA 96 Standards.

Enclosure Panels: Constructed of stainless steel. Sized to extend from hood top to ceiling, enclosing pipe and hanging parts.

End Panels: Should be used to maximize hood performance and eliminate the effects of cross drafts in kitchen. units constructed of stainless steel and sized according to hood width and cooking equipment. Exposed edges hemmed for safety and rigidity.

Roof Top Package: Combination ETL Listed exhaust/supply air unit with factory prewired and mounted motors, trunkline and curb vented on exhaust side.

Separate Exhaust and/or Make-Up Air Fans: ETL Listed single exhaust fans and supply-air fans and curbs available.

Fire Suppression System: UL 300 fire suppression system.

Lighting: Recessed Incandescent, Recessed Fluorescent, Compact Fluorescent, LED, Recessed LED, Halogen

Certifications

The ND-2 Model has been certified by ITS. This certification mark indicates that the product has been tested to and has met the minimum requirements of a widely recognized (consensus) U.S. and Canadian products safety standard, that the manufacturing site has been audited, and that the applicant has agreed to a program of periodic factory follow-up inspections to verify continued performance.

Models ND-2 are ETL Listed under file number 3054804-001 and complies with UL710, ULC710 and ULC-S646 Standards.

COMMERCIAL VENTILATION TECHNOLOGIES

MODERN UPDATE TO HOOD & FAN CONTROLS

NEW TECHNOLOGY

CUSTOMIZABLE INTERFACE

CaptiveAire continues to bring innovation to the market - introducing new state of the art controls for hood operation and lighting.

USER FRIENDLY CONTROLS

- Digital Interface with LCD Screen
- Customizable Options via Microprocessor Control

REDUCES INSTALLATION COST & COMPLEXITY

- Plug & Play Wiring between Digital Interface & Equipment
- Reduces High Voltage Wiring between Devices

REMOTE MONITORING

- Equipment Status & Alarms Displayed
- Improves Service & Reliability

INTEGRATED FEATURES

- Automatic Fan Activation
- Room Temperature Sensor
- Reset for Gas Valves
- Monitoring of Fan Overload Trips

CAT-5 Cable Wiring

Learn more about our ventilation products at
www.captiveaire.com

Crabtree McGrath Associates, Inc.

Fuller Middle School
Framingham, MA

Item #: 32
Quantity: 1

Demand Control Ventilation Specification

Application:

The Demand Control Ventilation System (DCV) is designed to automatically reduce exhaust and supply airflow quantities, while ensuring hood performance is maintained. The DCV uses Variable Frequency Drives (VFD) and temperature sensors in the exhaust ducts to modulate the fans speed during cooking operation and maximize energy savings. The LCD screen interface provides fan(s) control, system configuration, and diagnostic information.

Construction:

The DCV includes:

- Smart Controller
- LCD Screen Interface
- Duct Temperature Sensor(s)
- Variable Frequency Drive(s)

Controls shall be listed by ETL (UL 508A).

The system includes a LCD screen interface for fan(s) and hood lights control, wash control (if applicable), gas valve reset, programmable schedule, Max Air Override function, Preparation Time mode, Cool Down mode, and diagnostics including VFD status. The LCD screen shows descriptive plain text explaining the functions or values. The LCD screen interface will be installed on the face of the hood, on the face of the utility cabinet or on the face of a wall mounted control enclosure.

Control enclosure will be NEMA 1 rated and listed for installation inside of the exhaust hood utility cabinet. Control enclosure may be constructed of stainless steel or painted steel.

The smart controller will constantly monitor the exhaust air temperature through the riser mounted temperature sensor and modulate the fan speeds accordingly.

A room temperature sensor will also be provided for field installation in the kitchen space in order to start the fan(s) based on the fixed temperature differential between the room and the exhaust air in the duct rather than fixed set-points.

A Preparation Time Mode is available for morning operation: dedicated make-up air will be locked out only allowing the use of transfer air during this mode. Exhaust fan(s) will run at low CFM while maintaining a balanced kitchen pressure.

A Cool Down Mode is designed for equipment cool-down period at the end of the daily cooking operations: similarly to Preparation Time mode, dedicated make-up air will be locked out only allowing the use of transfer air during this mode. Exhaust fan(s) will run at low CFM while maintaining a balanced kitchen pressure.

Fan maximum/ minimum speeds will be adjustable for proper kitchen balance. Fan direction change is also available from the smart controller configuration menu without need for rewiring.

Duct Temperature Sensor(s) will be mounted in the exhaust hood riser(s). Temperature probe will be constructed of Stainless Steel. System will be factory pre-set to modulate fan speed within a range of 45°F for 600°F and 700°F cooking applications and a range of 5°F for 400°F cooking applications. Setpoints are fully adjustable through the LCD screen interface based on application needs.

The Max Air Override will have an adjustable timeout value.

The panels include color-coded wiring with as-built wiring diagrams and spare terminals controlled by the fire system micro switch. The panel is factory pre-wired to shut supply fans down in a fire condition. Options to turn ON the exhaust fans or turn off the hood lights in a fire condition will be configurable through the smart controller, but only through a password protected menu to prevent any changes after a fire inspection has been performed.

Automation Components, Inc.

Product Data

A/AN Series
A/CP Series
A/3K Series
A/1.8K Series
A/20K Series

Temperature Sensor

Product Description

The A/10K-AN (Type III), A/10K-CP (Type II), A/3K, A/1.8K and A/20K Series temperature sensors are thermistor type sensors. These sensors provide a predictable output over a specified temperature range to meet each manufacturer's required input values. (See www.workaci.com for complete curve chart specifications)

These units are offered in Room, Room with Setpoint, Room with Override, Room with Setpoint and Override, and Room w/ Setpoint, Override, and RJ11 Jack, Stainless Steel Duct and Duct without Box, Immersion, Stainless Plate, Raw, Bendable Copper and Stainless Steel Rigid Averaging, Strap-On, Bullet Probe, Button Sensor, and Outdoor Air Configurations.

All ACI Room sensors may be ordered with an optional setpoint (see chart on the following page), override, or with a 4 pin RJ11 or 6 pin RJ12 communication jack with terminal blocks, for remote programming. These units are also available with a 1/8" RS232 Stereo Jack.

These products are covered by ACI's Five (5) Year Limited Warranty, which is located in the front of ACI'S SENSORS & TRANSMITTERS CATALOG or can be found on ACI's web site, which is: www.workaci.com.

Product Specifications

Sensor Output	10K Ohms @ 77°F (25°C) Type III 10K Ohms @ 77°F (25°C) Type II 3K Ohms @ 77°F (25°C) 1.8K Ohms @ 77°F (25°C) 20K Ohms @ 77°F (25°C)
Accuracy (0 to 70°C)	+/-0.2°C (+/-0.36°F)
Stability	+/- 0.13°C (0.23°F)
Operating Temperature Range	-40 to 302°F (-40 to 150°C)
Operating Humidity	0 to 90% RH non-condensing
Interchangeability	+/- 0.2°C (+/-0.36°F)
Power Dissipation Constant	3 mW / °C
For sensors with Display option, see **LCD Series** Temp display cut sheet	

Thermistor

Attributes

- **Offer high accuracy and interchangeability over a wide temperature range.**
- **Higher resistance output relative to Platinum RTD's**
- **Non-polarity sensitive**
- **CE approval for thermistors except for:**
  - **Averaging sensors**
  - **LCDs and units that have leads longer than 3 meters**

Applications

- **OEM / Industrial**
- **Light Industrial**
- **DDC Systems**

Automation Components, Inc.
2305 Pleasant View Rd.
Middleton, WI 53562
PH: (608) 831-2585

Ordering Information

AN=type III
CP=type II

A/AN, A/CP, A/3K, A/1.8K or A/20K (choose configuration below)

-Configuration		-Length	-Enclosure Type	-Optional Plenum Wire
D	(Duct)	**4”, 8”, 12”, 18”**	**PB, GD, BB, 4X, EH**	
DO	(Duct without Box)	**4”, 8”, 12”, 18”**	**- - - - - - -**	**6’CL2P, 10’CL2P, 20’CL2P**
I	(Immersion w/ well)	**2.5”, 4”, 6”**	**PB*, GD, BB, 4X, EH**	
INW	(Immersion no well)	**2.5”, 4”, 6”**	**PB*, GD, BB, 4X, EH**	
A	(Copper Averaging)	**8’, 12’, 24’**	**PB, GD, BB, 4X, EH**	
FA	(Flex. Cable Averaging)	**8’, 12’, 24’**	**PB, GD, BB, 4X, EH**	
RA	(Rigid Averaging)	**18”, 24”, 36”**	**PB, GD, BB, 4X, EH**	
S	(Strap)	**- - - - - - -**	**PB*, GD, 4X**	
O	(Outdoor Air)	**- - - - - - -**	**EH, BB, 4X**	

SP	(Stainless Plate)
W	(Raw Potted Sensor)
W-6’	(Raw w/ 6’ Leads)
BP	(Bullet Probe)
BP-20’Z	(BP w/20’ of Zip Wire)
BBS	(Brass Button Sensor)
SBS	(Stainless Button Sensor)
PBS	(Plastic Button Sensor)

Enclosure Key
PB = Plastic Box
GD = Galvanized Box
BB = NEMA 3R
4X = NEMA 4X
EH = Euro Housing (Weather tight)

*Please note that the -**PB** (Plastic Box) is rated to 140° F and may not be suitable for high temperature applications.

Example: A/AN-D-4”-PB

Room configurations:

Configuration -[ ]	Communication Jack -[ ]	Pot Value* -[ ]	Setpoint Indicator* -[ ]	Pot Action* -[ ]	Display -[ ]
R - Room	**RJ4** (4 Pin RJ11)	400 5K	Cool | Warm	DA (Direct)	( ) No Display (Standard)
RS* - Room w/ Setpoint	**RJ6** (6 Pin RJ12)	1K 8.5K	55 to 85	RA (Reverse)	(DF) LCD Display (Degrees F)
RO - Room w/ Override	**RS232** (Stereo Jack)	2K 10K	10 to 30 °C		(DC) LCD Display (Degrees C)
RSO* - Room w/ Setpoint & Override		3K 20K			
		100K			

Room Sensors with* require setpoint specs (value, indication, and action) and are not listed on your packing slip or invoice.

Example: A/CP-RSO- 10K- Cool/Warm-DA

Standard enclosure defaults:

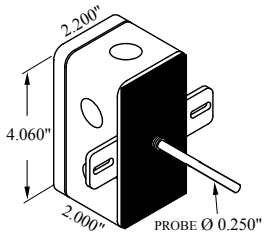

Duct
(Plastic Box)

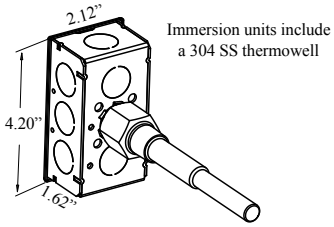

Immersion
(Galvanized Box)

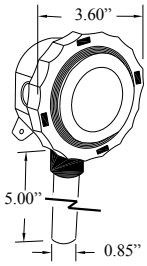

Outdoor Air
(Euro Enclosure)

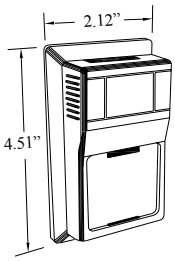

Room

ANSUL

by Tyco Fire Suppression & Building Products

R-102™ RESTAURANT FIRE SUPPRESSION SYSTEMS

Data/Specifications

FEATURES

- Low pH Agent
- Proven Design
- Reliable Gas Cartridge Operation
- Aesthetically Appealing
- UL Listed – Meets Requirements of UL 300
- ULC Listed – Meets Requirements of ULC/ORD-C1254.6
- CE Marked

APPLICATION

The ANSUL® R-102™ Restaurant Fire Suppression System is an automatic, pre-engineered, fire suppression system designed to protect areas associated with ventilating equipment including hoods, ducts, plenums, and filters. The system also protects auxiliary grease extraction equipment and cooking equipment such as fryers; griddles and range tops; upright, natural charcoal, or chain-type broilers; electric, lava rock, mesquite, or gas-radiant char-broilers; and woks.

The system is ideally suitable for use in restaurants, hospitals, nursing homes, hotels, schools, airports, and other similar facilities.

Use of the R-102 system is limited to indoor applications or locations that provide weatherproof protection within tested temperature limitations. The regulated release and tank assemblies must be mounted in an area where the air temperature will not fall below 32 °F (0 °C) or exceed 130 °F (54 °C). The system must be designed and installed within the guidelines of the UL/ULC Listed Design, Installation, Recharge, and Maintenance Manual.

SYSTEM DESCRIPTION

The restaurant fire suppression system is a pre-engineered, wet chemical, cartridge-operated, regulated pressure type with a fixed nozzle agent distribution network. It is listed with Underwriters Laboratories, Inc. (UL/ULC).

004215

The system is capable of automatic detection and actuation as well as remote manual actuation. Additional equipment is available for building fire alarm panel connections, electrical shutdown and/or interface, and mechanical or electrical gas line shut-off applications.

The detection portion of the fire suppression system allows for automatic detection by means of specific temperature-rated alloy type fusible links, which separate when the temperature exceeds the rating of the link, allowing the regulated release to actuate.

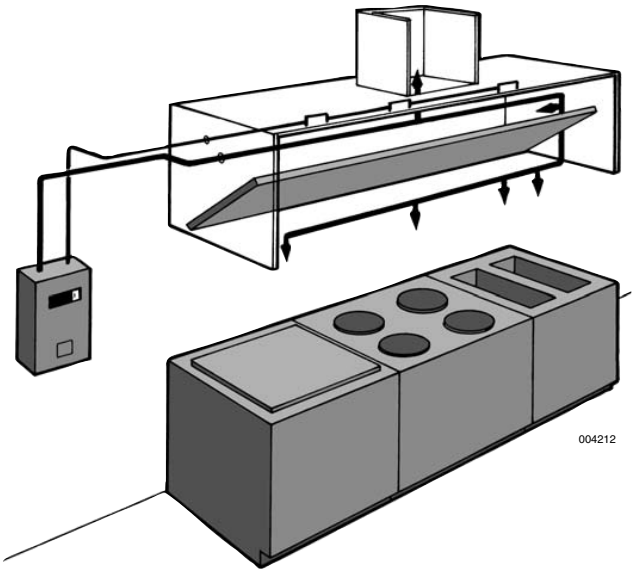

004212

A system owner's guide is available containing basic information pertaining to system operation and maintenance. A detailed technical manual, including system description, design, installation, recharge and resetting instructions, and maintenance procedures, is available to qualified individuals.

The system is installed and serviced by authorized distributors that are trained by the manufacturer.

The basic system consists of an ANSUL AUTOMAN® regulated release assembly which includes a regulated release mechanism and a wet chemical storage tank housed within a single enclosure. Nozzles with blow-off caps, detectors, cartridges, agent, fusible links, and pulley elbows are supplied in separate packages in the quantities needed for fire suppression system arrangements.

Additional equipment includes a remote manual pull station(s), mechanical and electrical gas valves, and electrical switches for automatic equipment and gas line shut-off. Accessories can be added such as alarms, warning lights, etc., to installations where required.

Additional tanks and corresponding equipment can be used in multiple arrangements to allow for larger hazard coverage. Each tank is limited to a listed maximum amount of flow numbers.

COMPONENT DESCRIPTION

Wet Chemical Agent – The extinguishing agent is a mixture of organic salts designed for rapid flame knockdown and foam securement of grease related fires. It is available in plastic containers with instructions for wet chemical handling and usage.

Agent Tank – The agent tank is installed in a stainless steel enclosure or wall bracket. The tank is constructed of stainless steel.

Tanks are available in two sizes: 1.5 gallon (5.7 L) and 3.0 gallon (11.4 L). The tanks have a working pressure of 110 psi (7.6 bar), a test pressure of 330 psi (22.8 bar), and a minimum burst pressure of 660 psi (45.5 bar).

The tank includes an adaptor/tube assembly. The adaptor assembly includes a chrome-plated steel adaptor with a 1/4 in. NPT female gas inlet, a 3/8 in. NPT female agent outlet, and a stainless steel agent pick-up tube. The adaptor also contains a bursting disc seal which helps to prevent the siphoning of agent up the pipe during extreme temperature variations.

Regulated Release Mechanism – The regulated release mechanism is a spring-loaded, mechanical/pneumatic type capable of providing the expellant gas supply to one, two, or three agent tanks depending on the capacity of the gas cartridge used. It contains a factory installed regulator deadset at 110 psi (7.6 bar) with an external relief of approximately 180 psi (12.4 bar). It has automatic actuation capabilities by a fusible link detection system and remote manual actuation by a mechanical pull station.

The regulated release mechanism contains a release assembly, regulator, expellant gas hose, and agent storage tank housed in a stainless steel enclosure with cover. The enclosure contains knock-outs for 1/2 in. conduit. The cover contains an opening for a visual status indicator.

It is compatible with mechanical gas shut-off devices; or, when equipped with a field or factory-installed switch and manual reset relay, it is compatible with electric gas line or appliance shut-off devices.

Regulated Actuator Assembly – When more than two agent tanks (or three 3.0 gallon (11.4 L) tanks in certain applications) are required, the regulated actuator is available to provide expellant gas for additional tanks. It is connected to the cartridge receiver outlet of the regulated release mechanism providing simultaneous agent discharge. It contains a regulated actuator deadset at 110 psi (7.6 bar) with an external relief of approximately 180 psi (12.4 bar). It has automatic actuation capabilities using pressure from the regulated release mechanism cartridge.

The regulated actuator assembly contains an actuator, regulator, expellant gas hose, and agent tank housed in a stainless steel enclosure with cover. The enclosure contains knockouts to permit installation of the expellant gas line.

Discharge Nozzles – Each discharge nozzle is tested and listed with the R-102 system for a specific application. Nozzle tips are stamped with the flow number designation (1/2, 1, 2, or 3). Each nozzle must have a metal or rubber blow-off cap to keep the nozzle tip orifice free of cooking grease build-up.

Agent Distribution Hose – Kitchen appliances manufactured with or resting on casters (wheels/rollers) may include an agent distribution hose as a component of the suppression system. This allows the appliance to be moved for cleaning purposes without disconnecting the appliance fire suppression protection. The hose assembly includes a restraining cable kit to limit the appliance movement within the range (length) of the flexible hose.

Flexible Conduit – Flexible conduit allows for quicker installations and the convenience of being able to route the cable over, under and around obstacles. Flexible conduit can be used as a substitute for standard EMT conduit or can be used with EMT conduit.

Flexible conduit can be used only with the Molded Remote Manual Pull Station.

Pull Station Assembly – The remote manual pull station is made out of a molded red composite material. The red color makes the pull station more readily identifiable as the manual means for fire suppression system operation.

The pull station is compatible with the ANSUL Flexible Conduit.

APPROVALS

- UL/ULC Listed
- CE Marked
- New York City Department of Buildings
- LPCB
- TFRI
- Marine Equipment Directive (MED)
- DNV
- ABS
- Lloyd's Register
- Meets requirements of NFPA 96 (Standard for the Installation of Equipment for the Removal of Smoke and Grease-Laden Vapors from Commercial Cooking Equipment)
- Meets requirements of NFPA 17A (Standard on Wet Chemical Extinguishing Systems)

ORDERING INFORMATION

Order all system components through your local authorized ANSUL Distributor.

An ANSUL R-102 Fire Suppression System shall be furnished. The system shall be capable of protecting all hazard areas associated with cooking equipment.

1.0 GENERAL

1.1 References

1.1.1 Underwriters Laboratories, Inc. (UL)
1.1.1.1 UL Standard 1254
1.1.1.2 UL Standard 300

1.1.2 Underwriters Laboratories of Canada (ULC)
1.1.2.1 ULC/ORD-C 1254.6

1.1.3 National Fire Protection Association (NFPA)
1.1.3.1 NFPA 96
1.1.3.2 NFPA 17A

1.2 Submittals

1.2.1 Submit two sets of manufacturer's data sheets

1.2.2 Submit two sets of piping design drawings

1.3 System Description

1.3.1 The system shall be an automatic fire suppression system using a wet chemical agent for cooking grease related fires.

1.3.2 The system shall be capable of suppressing fires in the areas associated with ventilating equipment including hoods, ducts, plenums, and filters as well as auxiliary grease extraction equipment. The system shall also be capable of suppressing fires in areas associated with cooking equipment, such as fryers; griddles and range tops; upright, natural charcoal, or chain-type broilers; electric, lava rock, mesquite or gas-radiant char-broilers; and woks.

1.3.3 The system shall be the pre-engineered type having minimum and maximum guidelines established by the manufacturer and listed by Underwriters Laboratories (UL/ULC).

1.3.4 The system shall be installed and serviced by personnel trained by the manufacturer.

1.3.5 The system shall be capable of protecting cooking appliances by utilizing either dedicated appliance protection and/or overlapping appliance protection.

1.4 Quality Control

1.4.1 Manufacturer: The R-102 Restaurant Fire Suppression System shall be manufactured by a company with at least forty years experience in the design and manufacture of pre-engineered fire suppression systems. The manufacturer shall be ISO 9001 registered.

1.4.2 Certificates: The wet agent shall be a specially formulated, aqueous solution of organic salts with a pH range between 7.7 – 8.7, designed for flame knockdown and foam securement of grease-related fires.

1.5 Warranty, Disclaimer, and Limitations

1.5.1 The pre-engineered restaurant fire suppression system components shall be warranted for five years from date of delivery against defects in workmanship and material.

1.6 Delivery

1.6.1 Packaging: All system components shall be securely packaged to provide protection during shipment.

1.7 Environmental Conditions

1.7.1 The R-102 system shall be capable of operating within a temperature range of 32 °F to 130 °F (0 °C to 54 °C).

2.0 PRODUCT

2.1 Manufacturer

2.1.1 Tyco Fire Suppression & Building Products, One Stanton Street, Marinette, Wisconsin 54143-2542, Telephone (715) 735-7411.

2.2 Components

2.2.1 The basic system shall consist of an ANSUL AUTOMAN regulated release assembly which includes a regulated release mechanism and a wet chemical storage tank housed within a single enclosure. Nozzles, blow-off caps, detectors, cartridges, agent, fusible links, and pulley elbows shall be supplied in separate packages in the quantities needed for fire suppression system arrangements. Additional equipment shall include remote manual pull station, mechanical and electrical gas valves, and electrical switches for automatic equipment and gas line shut-off, and building fire alarm control panel interface.

2.2.2 Wet Chemical Agent: The extinguishing agent shall be a specially formulated, aqueous solution of organic salts with a pH range between 7.7 – 8.7, designed for flame knockdown and foam securement of grease related fires.

2.2.3 Agent Tank: The agent tank shall be installed in a stainless steel enclosure or wall bracket. The tank shall be constructed of stainless steel. Tanks shall be available in two sizes; 1.5 gallon (5.7 L) and 3.0 gallon (11.4 L).The tank shall have a working pressure of 110 psi (7.6 bar), a test pressure of 330 psi (22.8 bar), and a minimum burst pressure of 660 psi (45.5 bar). The tank shall include an adaptor/tube assembly containing a burst disc union.

2.2.4 Regulated Release Mechanism: The regulated release mechanism shall be a spring-loaded, mechanical/pneumatic type capable of providing the expellant gas supply to one or two agent tanks depending on the capacity of the gas cartridge used or three 3.0 gallon (11.4 L) agent storage tanks in certain applications. It shall contain a factory installed regulator deadset at 110 psi (7.6 bar) with an external relief of approximately 180 psi (12.4 bar).

It shall have the following actuation capabilities: automatic actuation by a fusible link detection system and remote manual actuation by a mechanical pull station.

The regulated release mechanism shall contain a release assembly, regulator, expellant gas hose, and agent storage tank housed in a stainless steel enclosure with cover. The enclosure shall contain knockouts for 1/2 in. conduit. The cover shall contain an opening for a visual status indicator.

It shall be compatible with mechanical gas shut-off devices; or, when equipped with a field or factory-installed switch(es), it shall be compatible with electric gas line or appliance shut-off devices, or connections to a building fire alarm control panel.

2.2.5 Regulated Actuator Assembly: When more than two agent tanks or three agent tanks in certain applications are required, the regulated actuator shall be available to provide expellant gas for additional tanks. It shall be connected to the cartridge receiver outlet of the regulated release mechanism providing simultaneous agent discharge. The regulator shall be deadset at 110 psi (7.6 bar) with an external relief of approximately 180 psi (12.4 bar).The regulated actuator assembly shall contain an actuator, regulator, expellant gas hose, and agent tank housed in a stainless steel enclosure with cover. The enclosure shall contain knockouts to permit installation of the expellant gas line.

2.2.6 Discharge Nozzles: Each discharge nozzle shall be tested and listed with the R-102 system for a specific application. Nozzles tips shall be stamped with the flow number designation (1/2, 1, 2, or 3). Each nozzle shall have a metal or rubber blow-off cap to keep the nozzle tip orifice free of cooking grease build-up.

2.0 PRODUCT (Continued)

2.2 Components (Continued)

2.2.7 Distribution Piping: Distribution piping shall be Schedule 40 black iron, chrome-plated, or stainless steel conforming to ASTM A120, A53, or A106.

2.2.8 Detectors: The detectors shall be the fusible link style designed to separate at a specific temperature.

2.2.9 Cartridges: The cartridge shall be a sealed steel pressure vessel containing either carbon dioxide or nitrogen gas. The cartridge seal shall be designed to be punctured by the releasing device supplying the required pressure to expel wet chemical agent from the storage tank.

2.2.10 Agent Distribution Hose: An optional agent distribution hose shall be available for kitchen appliances manufactured with or resting on casters (wheels/rollers). This shall allow the appliance to be moved for cleaning purposes without disconnecting the appliance fire suppression protection. Hose assembly shall include a restraining cable kit to limit the appliance movement within the range (length) of the flexible hose.

2.2.11 Flexible Conduit: The manufacturer supplying the Restaurant Fire Suppression System shall offer flexible conduit as an option to rigid EMT conduit for the installation of pull stations and/or mechanical gas valves. The flexible conduit shall be UL Listed and include all approved components for proper installation.

2.2.12 Pull Station Assembly: The Fire Suppression System shall include a remote pull station for manual system actuation. The pull station shall be designed to include a built-in guard to protect the pull handle. The pull station shall also be designed with a pull handle to allow for three finger operation and shall be red in color for quick visibility.

3.0 IMPLEMENTATION

3.1 Installation

3.1.1 The R-102 fire suppression system shall be designed, installed, inspected, maintained, and recharged in accordance with the manufacturer's listed instruction manual.

3.2 Training

3.2.1 Training shall be conducted by representatives of the manufacturer.

▸ Indicates revised information

ANSUL, ANSUL AUTOMAN, and R-102 are trademarks of Tyco Fire Suppression & Building Products or its affiliates.

tyco
Fire Suppression & Building Products

www.ansul.com
One Stanton Street
Marinette, WI 54143-2542

Copyright ©2010
Form No. F-2004004-7

ITEM 37

CUSTOM FABRICATED FOODSERVICE EQUIPMENT

DESCRIPTION: Cook's Table with Sink

NO CUT SHEET AVAILABLE

CONSTRUCTION FEATURES:

Make - Fabricate per General Construction this Section

Size - 8'-6" x 30" x 36" high; overshelf 8'-6" long with shelf at 54" above floor; 20" deep shelf; 18" x 20" x 10" deep integral sink basin

Construction - 14 gauge stainless steel top and sink basin over angle frame, edges formed in turndown, six legs with gussets, adjustable feet, flanged feet at the corners for securing to floor, two crossrails and partial undershelf. Overshelf shall be 16 gauge stainless steel, constructed similar to a wall shelf, channel reinforced, and welded to three extended rear table legs with support webs, and supported in integrally welded inverted gussets with sleeved joints for rigidity.

Accessories - Drawer assembly, deck mounted faucet set and a 2" lever waste outlet. Provide four cast brushed aluminum enclosed outlet boxes for mounting of electric outlets in setback position below the overshelf complete with GFI receptacle and stainless steel cover plate. Mount below the overshelf and pre-wire thru upright to junction box mounted below the table

Item 38

CUSTOM FABRICATED FOODSERVICE EQUIPMENT

DESCRIPTION: **Mobile Work Table**

Quantity: 1

Size: 60”x 30”

NO CUT SHEET AVAILABLE

CONSTRUCTION FEATURES:

Make - Fabricate per General Construction this Section

Size - 60" x 30" x 36" high
Construction - 14 gauge stainless steel top over angle frame with edges turned down and mounted on four legs with gussets, 5" diameter swivel casters, two with brakes, and full undershelf and drawer assembly.

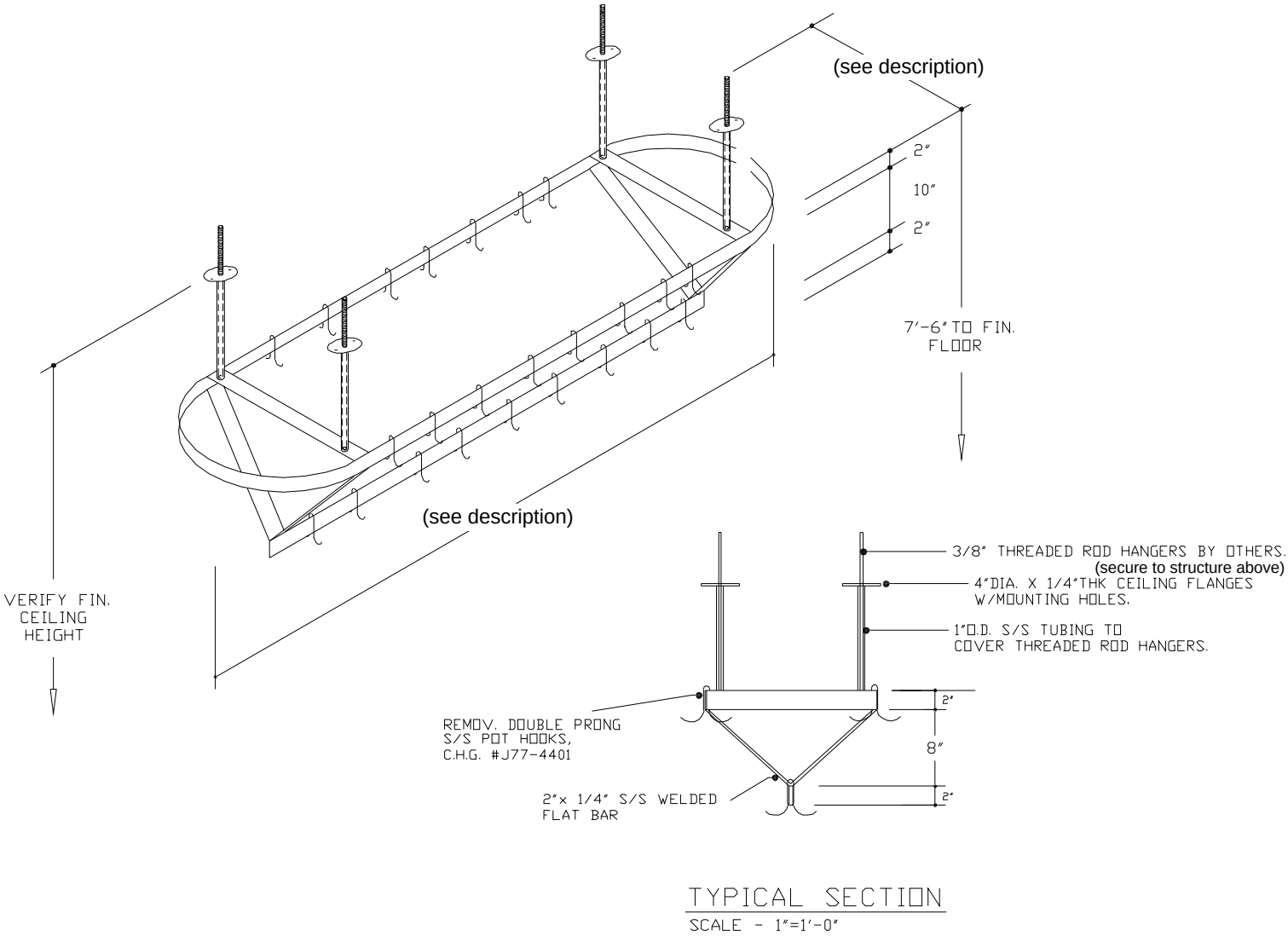

CUSTOM FABRICATED FOODSERVICE EQUIPMENT

DESCRIPTION: **Ceiling mounted utensil rack**

72" x 24"; mounted with rails at 78" & 90" above floor

CONSTRUCTION FEATURES:

1/4" x 2" stainless steel bar stock throughout
Two bar upper rail with full radiused ends
Single lower rail
Reinforcing straps
Suspended from the overhead structure on four hangers
Provide unit with forty-eight Component Hardware J77-4401 stainless steel double pot hooks.

EXTRA WIDE REACH-IN WARMING CABINETS

Full Door	Half Door
HS-1D-1-EW-PT	HS-1D-1-EW-PT-HD
HS-2D-1-EW-PT	HS-2D-1-EW-PT-HD
HSA-1D-1-EW-PT	HSA-1D-1-EW-PT-HD
HSA-2D-1-EW-PT	HSA-2D-1-EW-PT-HD

- **Equipped with Secure-Temp 1.0™ Technology™**
- **3 Year Parts & Labor Warranty Plus an Additional 2 Year Compressor Warranty**
- **Exclusive 2 Year Warranty on Santoprene Door Gaskets**

VICTORY ULTRASPEC™

FEATURING: SecureTemp 1.0™

Secure-Temp 1.0™ is the industry's first and only full service temperature monitoring solution for your kitchen. Secure-Temp 1.0™ is standard on all Victory models and is HACCP compliant & meets NAFEM's data protocol.

There are NO software or monthly monitoring fees.
Optional add on kits are available for additional units.

STANDARD FEATURES

- Secure-Temp 1.0™ Technology
- Full Electronic Control System
- Adjustable Electronic Temp Control from 80°F to 180°F
- Built-in, Adjustable Humidity Control Vent
- Safety Shielded Strip Type Heating Elements
- Externally Mounted Blower Maintains Even Temperatures
- Foamed-in-Place Polyurethane Insulation
- Heavy Duty Cylinder Locks
- Santoprene Door Gaskets with Exclusive 2 Year Warranty
- Self-Closing Doors with 120° Hold Open Feature
- Cam-Lift Hinges, Guaranteed for Life
- Ergonomically Correct Door Handles, Guaranteed for Life
- 6" High, Adjustable Stainless Steel Legs
- A Series has 6" High Standard Black Legs
- Proximity Door Switch Activates Interior Incandescent Lighting
- One Piece, Snap-In Magnetic Door Gasket(s)
- Stainless Steel Interior Door Liner
- Three (3) Chrome Plated Wire Shelves per Cabinet Section
- 10' Cord & Plug Standard

HS-2D-1-EW-PT-HD

OPTIONS & ACCESSORIES

- 6" or 3" Overall Height Casters (Set of 4)
- Correctional Facilities Options
- Stainless Steel Shelves
- 6" Stainless Steel Kick Plate
- Exterior Laminate Décor
- Finished Back with Rear Grille
- Stainless Steel Case Back and Shroud
- Optional Voltages (single section only)

Crabtree McGrath Associates, Inc.

Fuller Middle School
Framingham, MA

Item #: 41
Quantity: 1

VICTORY ULTRASPEC™
FEATURING: SecureTemp 1.0

CABINET CONSTRUCTION
The cabinet front and doors are constructed of heavy gauge, polished stainless steel to maintain an attractive appearance after years of heavy use. Polyurethane foam insulation throughout ensures the ultimate in energy efficiency.

DOOR CONSTRUCTION
The doors are heavy gauge, polished stainless steel with a stainless steel interior liner. Each door is provided with a cylinder lock and ergonomically correct vertical handle. The door hinges are self-closing and have a hold-open feature at 120° which facilitates product loading. Proximity switches energize the recessed interior incandescent lighting when the door is opened.

HEATING SYSTEM
The safety shielded, "strip type" heaters located at the bottom of the cabinet interior are precisely controlled by the V-TEMP™ electronic control with a temperature range from 80°F to 180°F. An externally mounted blower system ensures even temperatures throughout the cabinet interior. A built-in, adjustable humidity control vent allows the operator to maintain a moist or more dry environment.

INTERIOR STORAGE ARRANGEMENTS
Each cabinet section is provided with three (3) heavy-duty, chrome plated wire shelves. The shelves are adjustable in one inch increments. A wide door opening allows for the use of a variety of optional pan slide configurations including 18" x 26" and 12" x 20" pans.

ELECTRONIC CONTROL SYSTEM
The easy to use V-TEMP™ Control is provided standard with a two year parts and labor warranty. This durable, water resistant microprocessor monitors and controls the entire temperature maintenance process. It includes an ON/OFF switch located on the control face, interior light switch, LED temperature indicator in °C or° F, a HI/LO audio/visual temperature alarm , and a door ajar alarm. The control has a set point memory. Upon start up, the unit will warm up to the last temperature set point. A manager's "lock-out" feature is provided to safeguard pre-determined control settings.

CHARACTERISTICS	1 SECTION	2 SECTION
Width, Overall (in.)	31 1/4"	58 3/8"
Depth, Overall (inc. Handles)	39 1/4"	39 1/4"
Depth, Door(s) Open 90°	85 3/8"	85 3/8"
Height Overall (Inc. 6" legs)	84 1/4"	84 1/4"
Capacity Net (cu ft)	26.2	55.6
No. Full/Half Doors	2 Full, 4 Half	4 Full, 8 Half
No. of Shelves	3	6
Shelf Area (square ft.)	17.6	36.1

ELECTRICAL DATA

Cabinet Voltage	208-240/60/1	208-240/60/1
Heater Watts per Section (@240V)	1500	1500
Total Wattage (Heaters & Fan @ 240V)	1500	3000
Feed Wires	2	2
NEMA Plug	6-20P	6-20P
Total Amperes	6.3	13

NOTE: Plug style, voltage and full load amps may vary depending on certain options selected such as optional voltages and compressor upgrades.

CRATED DIMENSIONS	HEIGHT	WIDTH	DEPTH	FT^3	LBS
ONE SECTION	83	36	44	76.08	340
TWO SECTION	83	63	44	133.15	590

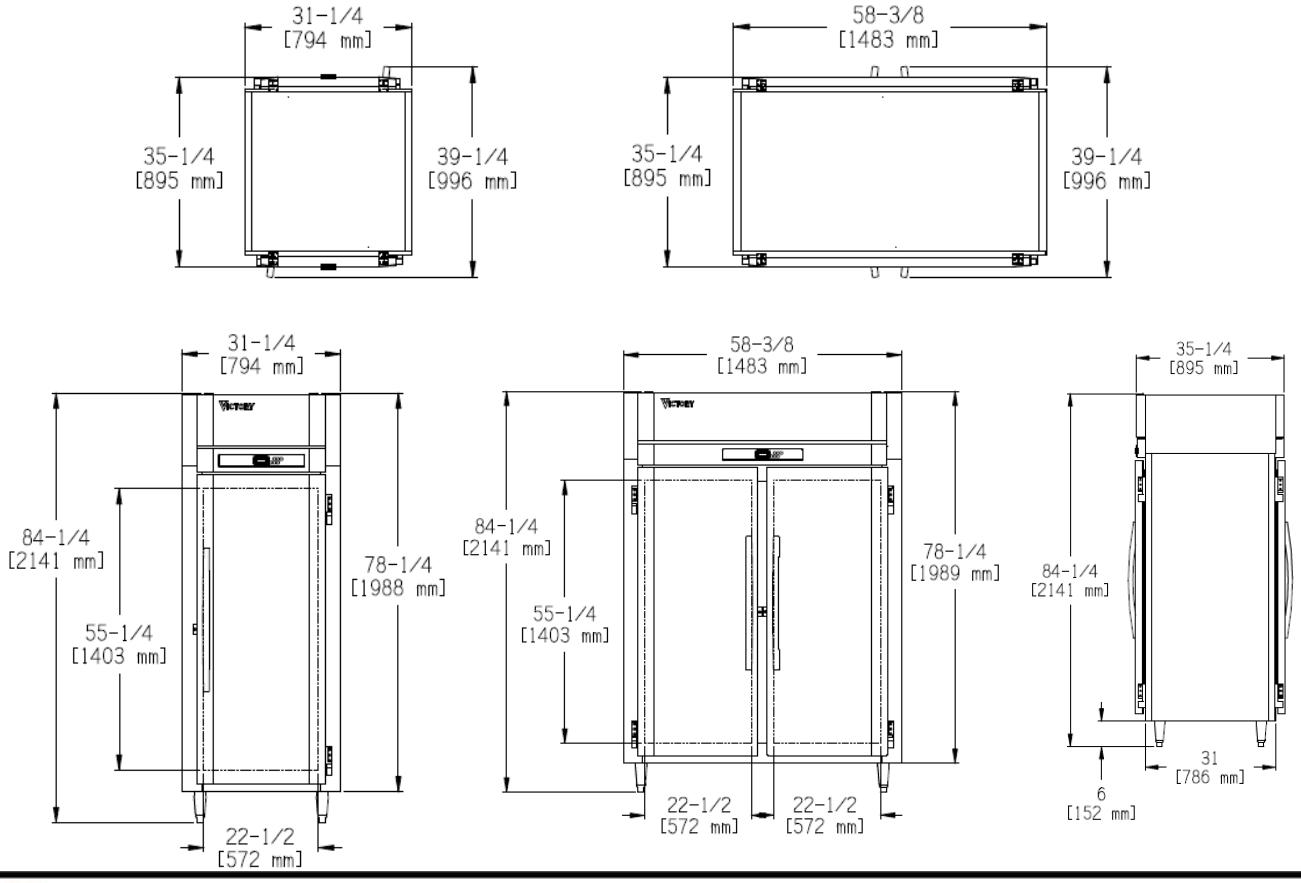

Crabtree McGrath Associates, Inc.

Fuller Middle School
Framingham, MA

Item #: 41
Quantity: 1

EXTRA WIDE PASS-THRU REFRIGERATORS

Long Door	Half Door
RS-1D-S1-EW-PT	RS-1D-S1-EW-PT-HD
RS-2D-S1-EW-PT	RS-2D-S1-EW-PT-HD
RS-3D-S1-EW-PT	RS-3D-S1-EW-PT-HD
RSA-1D-S1-EW-PT	RSA-1D-S1-EW-PT-HD
RSA-2D-S1-EW-PT	RSA-2D-S1-EW-PT-HD
RSA-3D-S1-EW-PT	RSA-3D-S1-EW-PT-HD

- **Equipped with Secure-Temp 1.0™ Technology™**
- **3 Year Parts & Labor Warranty Plus an Additional 2 Year Compressor Warranty**
- **Exclusive 2 Year Warranty on Santoprene Door Gaskets**

VICTORY ULTRASPEC™

FEATURING: SecureTemp 1.0™

Secure-Temp 1.0™ is the industry's first and only full service temperature monitoring solution for your kitchen. Secure-Temp 1.0™ is standard on all Victory models and is HACCP compliant & meets NAFEM's data protocol.

There are NO software or monthly monitoring fees.
Optional add on kits are available for additional units.

STANDARD FEATURES

- Secure-Temp 1.0™ Technology
- Full Electronic Control
- LED Lights with Proximity Door Switch Activates Interior Lighting
- Expansion Valve Technology
- 20 Gauge, Stainless Steel Doors
- Dual Speed, Energy Efficient, EC Fan Motors
- Santoprene Door Gaskets with Exclusive 2 Year Warranty
- Stainless Steel Breaker Strips
- High Performance, Balanced, Top-Mounted Refrigeration
- Environmentally Safe, R-134A Refrigerant
- Plasticized Evaporated Fin Coils
- Non-Electric Condensate Evaporator
- Foamed In-Place Polyurethane Insulation
- Heavy-Duty Cylinder Locks
- Self-Closing Doors With 120° Hold Open Feature
- Cam-Lift Hinges
- 6" High Adjustable Stainless Steel Legs
- Hinged Front Shroud Makes Condenser Cleaning Easier
- One Piece, Snap-In Magnetic Door Gasket(s)
- Anti-Condensate Door Perimeter Heaters
- Three (3) Epoxy Coated Wire Shelves Per Cabinet Section
- Cord and Plug (see electrical data for details)

RS-2D-S1-EW-PT

OPTIONS & ACCESSORIES

- Change Door Swing
- Epoxy Coated, Chrome Plated or Stainless Steel Shelves
- Remote Models: Air Cooled or Water Cooled
- Correctional Facility Options
- UltraSpec Glass Doors
- 6" or 3" Overall Height Casters (set of 4)
- Exterior Laminate Décor
- Adjustable Tray & Pan Slides
- Optional Voltages
- ***FLEXTEMP*** Performance Mode

VICTORY ULTRASPEC™
FEATURING: SecureTemp 1.0

CABINET CONSTRUCTION

The cabinet front and doors are constructed of heavy gauge, polished stainless steel to maintain an attractive appearance after years of heavy use. Polyurethane foam insulation throughout ensures the ultimate in energy efficiency. The front shroud lifts up for easy access when cleaning the condenser unit.

DOOR CONSTRUCTION

The doors are heavy gauge, polished stainless steel with a stainless steel interior liner. Each door is provided with a cylinder lock and ergonomically correct vertical handle. The door hinges are self-closing and have a hold-open feature at 120° which facilitates product loading. Proximity switches energize the recessed interior incandescent lighting when the door is opened. Humidity control wires around the door jamb prevent condensation from forming on the front of the cabinet in high humidity environments. The wires are concealed by a high impact, non-conducting thermal breaker cap.

REFRIGERATION SYSTEM

All components of the high efficiency, air-cooled, self-contained refrigeration system are mounted on top of the cabinet out of the food storage zone providing greater usable storage space. Environmentally friendly R-134a refrigerant is efficiently metered by an expansion valve providing a constant, safe operating temperature and quick "recovery" under the most demanding conditions. The hermetically sealed systems are designed to operate at 38°F. Each cooling coil has plasticized fin coils to resist food acids and dual-speed EC fan motor(s) for greater cooling capacity and efficiency. All condensate water is disposed of automatically by the energy efficient, non-electric condensate evaporator.

INTERIOR STORAGE ARRANGEMENTS

Each cabinet section is provided with three heavy-duty, epoxy coated wire shelves. The shelves are adjustable in one inch increments. A wide door opening allows for the use of a variety of optional pan slide configurations including 18" x 26" and 12" x 20" pans.

ELECTRONIC CONTROL SYSTEM

The easy to use Electronic Control is standard. This durable, water resistant microprocessor monitors and controls the entire temperature maintenance process. It includes an ON/OFF switch, manual defrost, interior light switch, LED temperature indicator in °C or °F, a HI/LO audio/visual temperature alarm, power supply interruption, door ajar and "clean condenser" alarms. A manager's "lock-out" feature is provided to safeguard predetermined control settings. A HAACP Event Indicator/Memory feature announces and records up to nine (9) alarm events. Unique to the V-TEMP™ are two standard modes of operation:

SUPERCOOL - Provides a lower "set-point" refrigeration condition for a set period of time when food has just been loaded into the refrigerator and needs to be quickly brought back down to a safe temperature.

ENERGY SAVING - The cabinet automatically reverts to the energy saving mode when there are no door openings for four hours.

A **FLEXTEMP** mode of operation is available as an option. FLEXTEMP provides the ability to select a unique temperature from 28°F to 40°F. This optional feature is ideal for seasonal menu changes and items with specific temperature requirements for dairy, meat, fish or poultry.

CHARACTERISTICS	1 Section	2 Section	3 Section
Net Capacity	26.2	55.6	84.9
Width, Overall (in.)	31 1/4"	58 3/8"	85 1/2
Depth, Overall (inc. Handles)	39 1/4	39 1/4	40 5/8
Depth, Door(s) Open 90°	85 3/8"	85 3/8"	86 7/8"
Clear Door Width (in.)	22 1/2	22 1/2	22 1/2
Clear Half-Door Height (in.)	25 3/8"	25 3/8"	25 3/8"
Clear Full-Door Height (in.)	55 1/4"	55 1/4"	55 1/4"
Height Overall (inc. 6" legs)	84 1/4"	84 1/4"	84 1/4"
No. Full/Half Doors	2F, 4H	4F, 8H	6F, 12H
No. of Shelves	3	6	9
Shelf Area (sq. ft.)	17.6	36.1	54.3

ELECTRICAL DATA

Cabinet Voltage	115/60/1	115/60/1	115/60/1
Feed Wires	2	2	2
Condensing Unit Voltage	115/60/1	115/60/1	115/60/1
NEMA Plug	5-15P	5-15P	5-20P
Total Amperes	10	11	13.8

NOTE: Plug style, voltage and full load amps may vary depending on certain options selected such as optional voltages and compressor upgrades.

REFRIGERATION DATA

Condensing Unit Size	1/3 HP	1/3 HP	1/2 HP
Refrigerant	R-134A	R-134A	R-134A

CRATED DIMENSIONS	Height	Width	Depth	Cu. Ft.	Lbs
One Section	83	36"	44	76.08	355
Two Section	83	63	44	133.15	630
Three Section	84	90 3/4	44 3/4	197.41	760

*** Remote units use R-404A refrigerant standard and come with 6" legs**

Note: In order to provide peak operating performance the cabinet must have a 2 inch all around clearance and 12 inches above the top of the condensing unit. This endures an adequate air supply and space for routine maintenance and/or service if required.

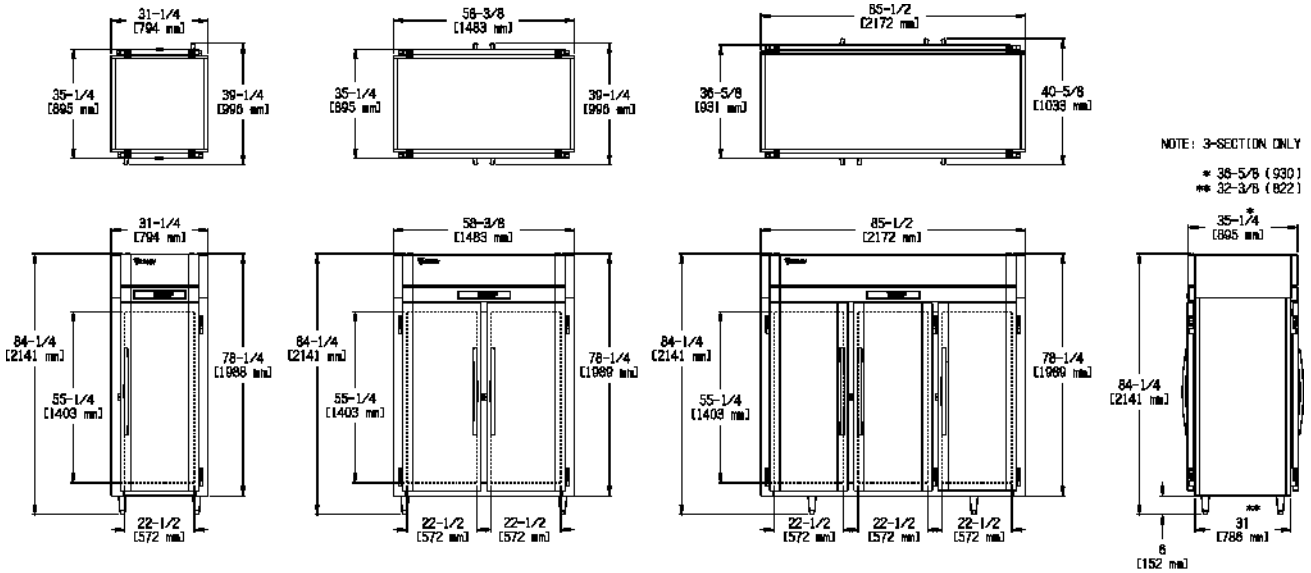

Crabtree McGrath Associates, Inc.

Fuller Middle School
Framingham, MA

Item #: 42
Quantity: 2

EXTRA WIDE REACH-IN WARMING CABINETS

Full Door	Half Door
HS-1D-1-EW-PT	HS-1D-1-EW-PT-HD
HS-2D-1-EW-PT	HS-2D-1-EW-PT-HD
HSA-1D-1-EW-PT	HSA-1D-1-EW-PT-HD
HSA-2D-1-EW-PT	HSA-2D-1-EW-PT-HD

- Equipped with Secure-Temp 1.0™ Technology™
- 3 Year Parts & Labor Warranty Plus an Additional 2 Year Compressor Warranty
- Exclusive 2 Year Warranty on Santoprene Door Gaskets

VICTORY ULTRASPEC™

FEATURING: SecureTemp 1.0™

Secure-Temp 1.0™ is the industry's first and only full service temperature monitoring solution for your kitchen. Secure-Temp 1.0™ is standard on all Victory models and is HACCP compliant & meets NAFEM's data protocol.

There are NO software or monthly monitoring fees.
Optional add on kits are available for additional units.

STANDARD FEATURES

- Secure-Temp 1.0™ Technology
- Full Electronic Control System
- Adjustable Electronic Temp Control from 80°F to 180°F
- Built-in, Adjustable Humidity Control Vent
- Safety Shielded Strip Type Heating Elements
- Externally Mounted Blower Maintains Even Temperatures
- Foamed-in-Place Polyurethane Insulation
- Heavy Duty Cylinder Locks
- Santoprene Door Gaskets with Exclusive 2 Year Warranty
- Self-Closing Doors with 120° Hold Open Feature
- Cam-Lift Hinges, Guaranteed for Life
- Ergonomically Correct Door Handles, Guaranteed for Life
- 6" High, Adjustable Stainless Steel Legs
- A Series has 6" High Standard Black Legs
- Proximity Door Switch Activates Interior Incandescent Lighting
- One Piece, Snap-In Magnetic Door Gasket(s)
- Stainless Steel Interior Door Liner
- Three (3) Chrome Plated Wire Shelves per Cabinet Section
- 10' Cord & Plug Standard

HS-2D-1-EW-PT-HD

OPTIONS & ACCESSORIES

- 6" or 3" Overall Height Casters (Set of 4)
- Correctional Facilities Options
- Stainless Steel Shelves
- 6" Stainless Steel Kick Plate
- Exterior Laminate Décor
- Finished Back with Rear Grille
- Stainless Steel Case Back and Shroud
- Optional Voltages (single section only)

VICTORY ULTRASPEC™
FEATURING: SecureTemp 1.0

CABINET CONSTRUCTION
The cabinet front and doors are constructed of heavy gauge, polished stainless steel to maintain an attractive appearance after years of heavy use. Polyurethane foam insulation throughout ensures the ultimate in energy efficiency.

DOOR CONSTRUCTION
The doors are heavy gauge, polished stainless steel with a stainless steel interior liner. Each door is provided with a cylinder lock and ergonomically correct vertical handle. The door hinges are self-closing and have a hold-open feature at 120° which facilitates product loading. Proximity switches energize the recessed interior incandescent lighting when the door is opened.

HEATING SYSTEM
The safety shielded, "strip type" heaters located at the bottom of the cabinet interior are precisely controlled by the V-TEMP™ electronic control with a temperature range from 80°F to 180°F. An externally mounted blower system ensures even temperatures throughout the cabinet interior. A built-in, adjustable humidity control vent allows the operator to maintain a moist or more dry environment.

INTERIOR STORAGE ARRANGEMENTS
Each cabinet section is provided with three (3) heavy-duty, chrome plated wire shelves. The shelves are adjustable in one inch increments. A wide door opening allows for the use of a variety of optional pan slide configurations including 18" x 26" and 12" x 20" pans.

ELECTRONIC CONTROL SYSTEM
The easy to use V-TEMP™ Control is provided standard with a two year parts and labor warranty. This durable, water resistant microprocessor monitors and controls the entire temperature maintenance process. It includes an ON/OFF switch located on the control face, interior light switch, LED temperature indicator in °C or° F, a HI/LO audio/visual temperature alarm , and a door ajar alarm. The control has a set point memory. Upon start up, the unit will warm up to the last temperature set point. A manager's "lock-out" feature is provided to safeguard pre-determined control settings.

CHARACTERISTICS	1 SECTION	2 SECTION
Width, Overall (in.)	31 1/4"	58 3/8"
Depth, Overall (inc. Handles)	39 1/4"	39 1/4"
Depth, Door(s) Open 90°	85 3/8"	85 3/8"
Height Overall (Inc. 6" legs)	84 1/4"	84 1/4"
Capacity Net (cu ft)	26.2	55.6
No. Full/Half Doors	2 Full, 4 Half	4 Full, 8 Half
No. of Shelves	3	6
Shelf Area (square ft.)	17.6	36.1

ELECTRICAL DATA

Cabinet Voltage	208-240/60/1	208-240/60/1
Heater Watts per Section (@240V)	1500	1500
Total Wattage (Heaters & Fan @ 240V)	1500	3000
Feed Wires	2	2
NEMA Plug	6-20P	6-20P
Total Amperes	6.3	13

NOTE: Plug style, voltage and full load amps may vary depending on certain options selected such as optional voltages and compressor upgrades.

CRATED DIMENSIONS	HEIGHT	WIDTH	DEPTH	FT^3	LBS
ONE SECTION	83	36	44	76.08	340
TWO SECTION	83	63	44	133.15	590

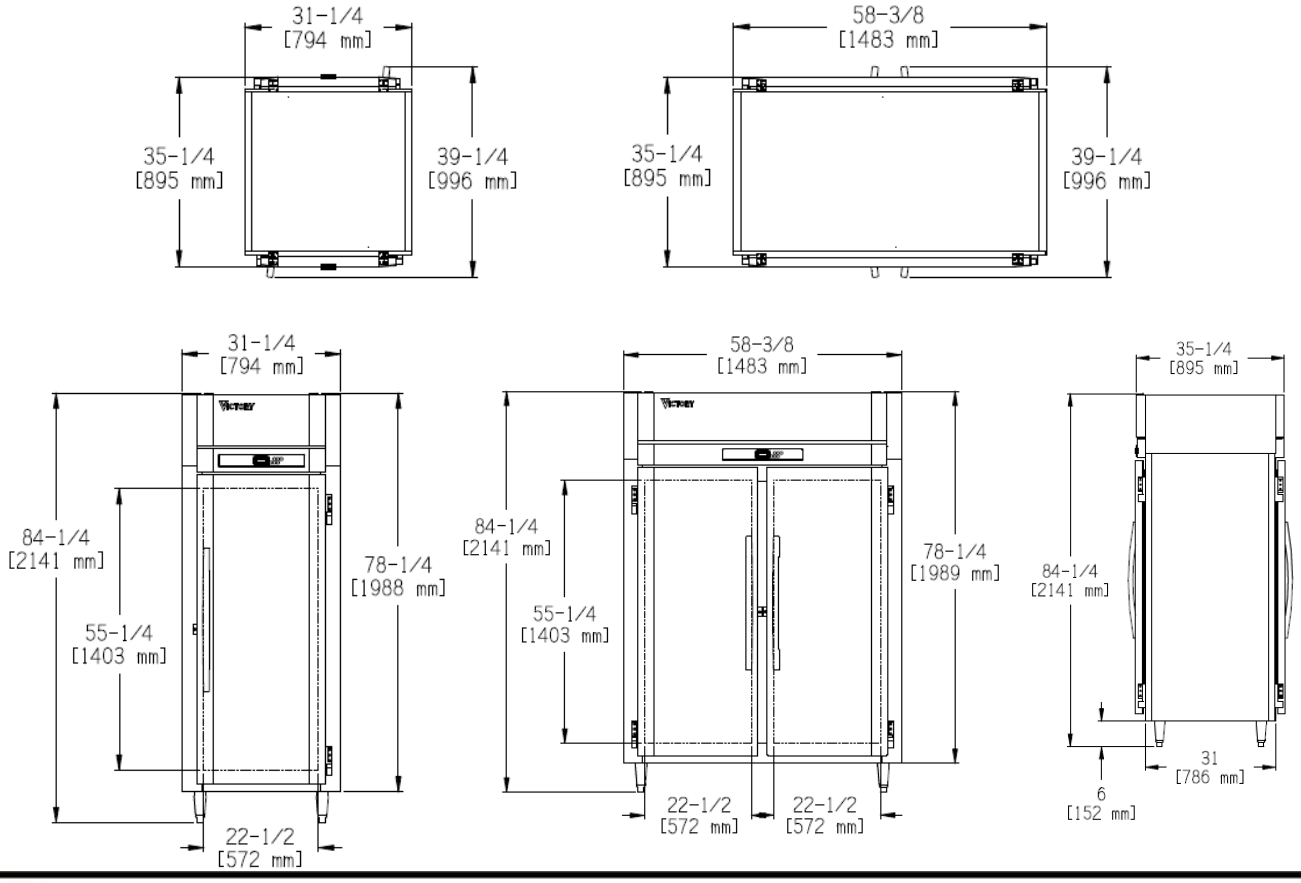

Crabtree McGrath Associates, Inc.

Fuller Middle School
Framingham, MA

Item #: 43
Quantity: 1

Item 44

CUSTOM FABRICATED FOODSERVICE EQUIPMENT

DESCRIPTION: **Mobile Work Table**

Quantity: 1

Size: 72”x 30”

NO CUT SHEET AVAILABLE

CONSTRUCTION FEATURES:

Make - Fabricate per General Construction this Section

Size - 60" x 30" x 36" high
Construction - 14 gauge stainless steel top over angle frame with edges turned down and mounted on four legs with gussets, 5" diameter swivel casters, two with brakes, and full undershelf and drawer assembly.

Project _____

Item # _____

Quantity _____

Heated Base Glass Shelves

Portables: HBG-2418, -3018, -3618, -4818, -6018, -7218

Built-Ins: HBGB-2418, -3018, -3618, -4818, -6018, -7218

HBGBH-2418, -3018, -3618, -4818, -6018, -7218

(HBGBH is an international model only)

Hatco Heated Base Glass Shelves have a heated ceramic glass top that creates uniform heat across the entire surface, and are made of approved foodsafe material. Ideal for use on pass-through areas, buffet lines, and as hors d'oeuvre displays.

Standard features

- Made of approved foodsafe material allowing placement of food product directly on the glass surface
- Thermostatically-controlled ceramic glass surface heated base
- Lighted On/Off rocker switch
- All units are equipped with an attractive trim mounting ring available in stainless steel (standard) *Designer* Black or White
- Portable models come with a 1829 mm (6') cord and plug
- Portable models offer an optional angled food stop which keeps product on the heat zone
- Portable models' surface temperature ranges from 100° to 195°F (38° to 90° C)
- Built-In standard and high watt models are recommended for use in metallic counters – for other surfaces, verify that the material is suitable for temperatures
  - Up to 200°F (93°C) for Standard Built-In*
  - Up to 257°F (125°C) for High Watt Built-In*
- Built-in standard and high watt models include control box with 3' (915 mm) conduit and 6' (1829 mm) cord and plug

* Hatco is not responsible for counter damage caused by heat from the warmer.

Note for Heated Base Glass Shelves with overhead Strip Heaters: For any size HBGB, the next larger size GRA or GR2A Strip Heater will fit over the top. For example, a HBGB-3018 will require a GRA-36 or GR2A-36. The GRA will have a tight fit to the frame of the base. The GR2A will have approximately a 4" (102 mm) space.

For operation, location and safety information, please refer to the Installation & Operating Manual.

Options (available at time of purchase only)

Ceramic Glass Color
- ☐ Black ☐ White

Portable models

Angled Food Stop
- ☐ *Designer* Black ☐ White
- ☐ 24" (610 mm) ☐ 30" (672 mm) ☐ 36" (914 mm)
- ☐ 48" (1219 mm) ☐ 60" (1524 mm) ☐ 72" (1829 mm)

☐ Trim Ring color - Stainless Steel is standard color (Non-standard colors are non-returnable)
- ☐ *Designer* Black ☐ White

☐ *Frame (base) color* - Stainless Steel is standard color
- ☐ *Designer* Black ☐ White

Built-In models

☐ *Designer* Color for Flush Mount Control Bezel Box - Stainless Steel is standard color (Non-standard colors are non-returnable)
- ☐ *Designer* Black ☐ White

☐ Unit without Trim Ring (HBGBH models only)

☐ Flush Mount Electronic Control Box with Lighted Power Switch – CE not available (HBGB models only)

☐ Flush Mount Thermostatic Control Box with Lighted Power Switch (HBGB models only)

☐ 72" (1829 mm) conduit in lieu of standard 36" (915 mm) used with Flush Mount Electronic Control Box (HBGB models only)

☐ 36" (915 mm) conduit in lieu of standard 72" (1829 mm) used with Flush Mount Electronic Control Box (HBGBH models only)

☐ 120" (3050 mm) conduit used with Flush Mount Electronic Control Box (in lieu of standard 36" (915 mm) for HBGB and 72" (1829 mm) for HBGBH)

☐ Built-In Heated Base Glass Shelf with Recessed Top (HBGB models only)

ANSI/NSF 4

Specific models as marked

Crabtree McGrath Associates, Inc.

Fuller Middle School
Framingham, MA

Item #: 47
Quantity: 2

Heated Base Glass Shelves

Models: HBG-2418, -3018, -3618, -4818, -6018, -7218
HBGB-2418, -3018, -3618, -4818, -6018, -7218
HBGBH-2418, -3018, -3618, -4818, -6018, -7218

HBG

TOP VIEW

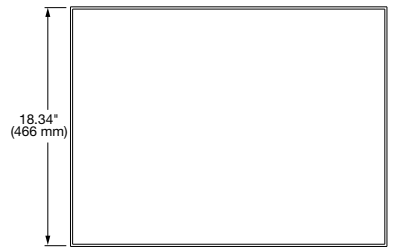

SIDE VIEW

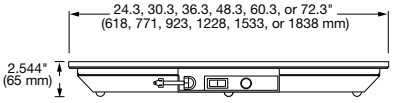

HBGB

TOP VIEW

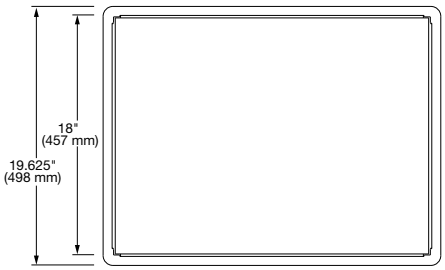

SIDE VIEW

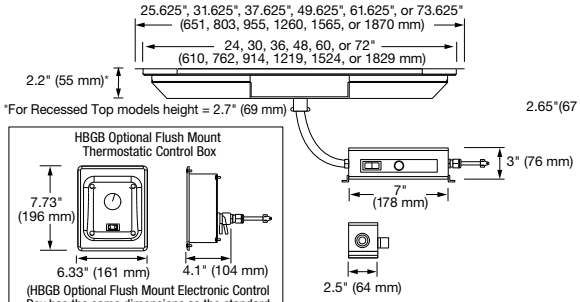

HBGBH (international model only)
Shown with optional Trim Ring

TOP VIEW

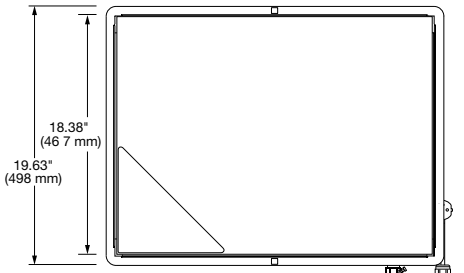

SIDE VIEW

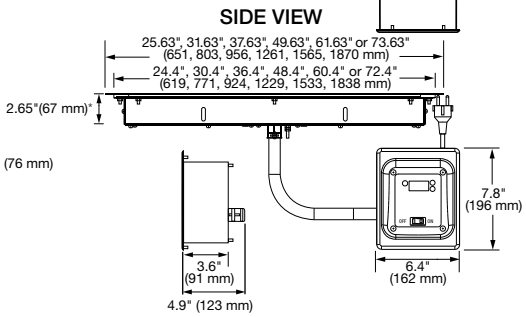

SPECIFICATIONS
Portable Rectangular Heated Base Glass Shelves

The shaded areas contain electrical information for International models

Model	Dimensions (Width x Depth x Height▲)	Voltage	Watts	Amps	Plug	Ship Weight*
HBG-2418	24.3" x 18.3" x 2.544" (618 x 466 x 65 mm)	100	425	4.3	NEMA 5-15P	29 lbs. (14 kg)
		120	425	3.5	NEMA 5-15P	
		220ᶻ	420	1.9	BS-1363	
		220-230 (CE)	420-459	1.9-2.0	CEE 7/7 Schuko	
		230-240 (CE)	459-500	2.0-2.1	BS-1363 or AS 3112■	
HBG-3018	30.3" x 18.3" x 2.544" (771 x 466 x 65 mm)	100	525	5.3	NEMA 5-15P	33 lbs. (15 kg)
		120	525	4.4	NEMA 5-15P	
		220ᶻ	525	2.4	BS-1363	
		220-230 (CE)	525-574	2.4-2.5	CEE 7/7 Schuko	
		230-240 (CE)	574-625	2.5-2.6	BS-1363 or AS 3112■	
HBG-3618•	36.3" x 18.3" x 6.15" (923 x 466 x 156 mm)	100	630	6.3	NEMA 5-15P	36 lbs. (17 kg)
		120	630	5.3	NEMA 5-15P	
		220ᶻ	630	2.9	BS-1363	
		220-230 (CE)	630-689	2.9-3.0	CEE 7/7 Schuko	
		230-240 (CE)	689-750	3.0-3.1	BS-1363 or AS 3112■	
HBG-4818•≈	48.3" x 18.3" x 6.15" (1228 x 466 x 156 mm)	100	850	8.5	NEMA 5-15P	42 lbs. (19 kg)
		120	850	7.1	NEMA 5-15P	
		220ᶻ	840	3.8	BS-1363	
		220-230 (CE)	840-918	3.8-4.0	CEE 7/7 Schuko	
		230-240 (CE)	918-1000	4.0-4.2	BS-1363 or AS 3112■	
HBG-6018•≈	60.3" x 18.3" x 6.15" (1533 x 466 x 156 mm)	100	1050	10.5	NEMA 5-15P	60 lbs. (28 kg)
		120	1050	8.8	NEMA 5-15P	
		220ᶻ	1050	4.8	BS-1363	
		220-230 (CE)	1050-1148	4.8-5.0	CEE 7/7 Schuko	
		230-240 (CE)	1148-1250	5.0-5.2	BS-1363 or AS 3112■	
HBG-7218•≈	72.3" x 18.3" x 6.15" (1838 x 466 x 156 mm)	100	1260	12.6	NEMA 5-15P	68 lbs. (31 kg)
		120	1260	10.5	NEMA 5-15P	
		220ᶻ	1260	5.7	BS-1363	
		220-230 (CE)	1260-1378	5.7-6.0	CEE 7/7 Schuko	
		230-240 (CE)	1378-1500	6.0-6.3	BS-1363 or AS 3112■	

▲ For Angled Food Stop option, add 0.5" (13 mm) to the Width, Depth and Height dimensions.
* Shipping weight includes packaging.
■ AS3112 plug is for use in Australia only.
• Height includes standard 4" legs.
≈ Units 48" (1219 mm) and larger are constructed of two equal size pieces of glass which create a seam.
ᶻ 60 Hz

Crabtree McGrath Associates, Inc.

Fuller Middle School
Framingham, MA

Item #: 47
Quantity: 2

Heated Base Glass Shelves

Models: HBG-2418, -3018, -3618, -4818, -6018, -7218
HBGB-2418, -3018, -3618, -4818, -6018, -7218
HBGBH-2418, -3018, -3618, -4818, -6018, -7218

CORD LOCATION

HBG: Center of side with switch.
HBGB and HBGBH: Cord is attched to Control Box

PLUG CONFIGURATIONS

Please refer to electrical specifications shown in charts.

NEMA 5-15P

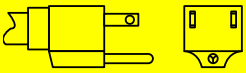

AS 3112

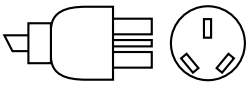

CEE 7-7 Schuko

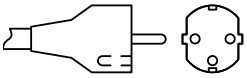

BS-1363

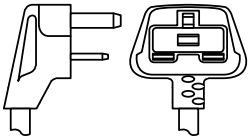

CCC

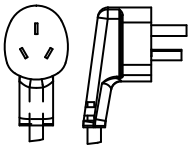

Countertop Cutout Dimensions for Built-Ins

Model	Min. Width	Max. Width	Min. Depth	Max. Depth
HBGB, HBGBH-2418	24.625" (625 mm)	24.875" (632 mm)	18.625" (473 mm)	18.875" (480 mm)
HBGB, HBGBH-3018	30.625" (778 mm)	30.875" (784 mm)	18.625" (473 mm)	18.875" (480 mm)
HBGB, HBGBH-3618	36.625" (930 mm)	36.875" (937 mm)	18.625" (473 mm)	18.875" (480 mm)
HBGB, HBGBH-4818	48.625" (1235 mm)	48.875" (1241 mm)	18.625" (473 mm)	18.875" (480 mm)
HBGB, HBGBH-6018	60.625" (1540 mm)	60.875" (1546 mm)	18.625" (473 mm)	18.875" (480 mm)
HBGB, HBGBH-7218	72.625" (1845 mm)	72.875" (1851 mm)	18.625" (473 mm)	18.875" (480 mm)

Control Box Cutout Dimensions for Built-Ins

Model	Width	Height	Depth
HBGB standard	7.25" (238 mm)	3.25" (83 mm)	2.75" (70 mm)
HBGB-FLUSH-ITC	5.875" (149 mm)	6.375" (162 mm)	4.75" (121 mm)
HBGB-FLUSH-TSTAT	5.875" (149 mm)	6.375" (162 mm)	4" (102 mm)
HBGBH standard	5.875" (149 mm)	6.375" (162 mm)	4.75" (121 mm)

PRODUCT SPECS
Heated Base Glass Shelves

The Heated Base Glass Shelf shall be a Hatco Model … as manufactured by the Hatco Corporation, Milwaukee, WI 53234 U.S.A.

The Heated Base Glass Shelf shall be rated at … watts, volts, and … inches (millimeters) in overall width. It shall consist of food-safe material, thermostatically-controlled heated base, and a 6' (1829 mm) cord with plug attached or a remote box with 3' (914 mm) conduit (HBGB models only).

Warranty consists of 24/7 parts and service assistance (U.S. and Canada only). All Glo-Ray® blanket heating elements warranted against burnout for one year (U.S. and Canada only).

Crabtree McGrath Associates, Inc.

Fuller Middle School
Framingham, MA

Item #: 47
Quantity: 2

There's only one #1™

Project _____

Item # _____

Quantity _____

Glo-Ray® Aluminum Infrared Strip Heaters

Models: GRA-18, -24, -30, -36, -42, -48, -54, -60, -66, -72, -84, -96, -108, -120, -132, -144
GRAH-18, -24, -30, -36, -42, -48, -54, -60, -66, -72, -84, -96, -108, -120, -132, -144

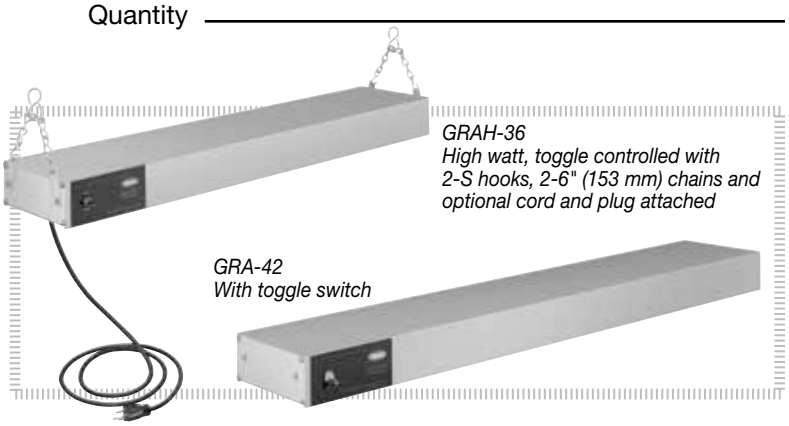

Safely hold the temperature of your product without drying out or further cooking food with Hatco's Glo-Ray® Infrared Aluminum Strip Heaters. The end result is hot, fresh food that's ready-to-serve. The continuous aluminum housing and heavy-duty mountings ensure the durability and quality of Hatco products.

Standard features

- Prefocused heat pattern covers the entire holding surface
- Consistent holding temperatures with no "cold spots"
- Sturdy extruded aluminum housings that do not sag, in widths from 18" to 144" (457 to 3658 mm)
- Standard and high watt models available
- Reflector does not blacken, maintaining a consistent heat pattern
- Protective wire guards under heating element
- Insulation minimizes heat loss
- Factory assembled with mounting tabs, ready to install quickly and easily
- All units single phase only
- Additional reflector styles and lower wattage elements also available, please consult factory for more information

†Non-standard colors are non-returnable

Options (available at time of purchase only)

6" (152 mm) housing - *Designer* Color or Gloss Finish† (clear anodized standard)
☐Warm Red ☐Black ☐Gray Granite ☐White Granite
☐Navy Blue ☐Hunter Green ☐Antique Copper ☐Radiant Red
☐Glossy Gray ☐Bold Black ☐Gleaming Gold ☐Brilliant Blue

☐Indicator Light (not available as Built-In with Tandem Element option)

Leads - Extended beyond standard 3' (914 mm), conduit on 120V, 208V, 240V models only (must specify lead length)
☐1'-5' (305-1525 mm) ☐6'-10' (1829-3048 mm)
☐11'-15' (3352-4572 mm) ☐16'-20' (4877-6096 mm)

Sneeze Guard
☐9.375" (238 mm) - One side ☐9.375" (238 mm) - Two sides
☐14" (356 mm) - One side ☐14" (356 mm) - Two sides

☐No Control

Infinite Control (remote enclosure recommended), consult factory if element rating exceeds 12.2 amps
☐Built-in (max. of 12.2 amps) (remote installation recommended)
☐Remote Infinite Switch (max. 12.2 amps)

Remote Control Enclosure - *Designer* Color or Gloss Finish† (clear anodized standard)
☐Warm Red ☐Black ☐Gray Granite ☐White Granite
☐Navy Blue ☐Hunter Green ☐Antique Copper ☐Radiant Red
☐Glossy Gray ☐Bold Black ☐Gleaming Gold ☐Brilliant Blue

☐Adjustable Tubular Stands 10"-14" (254-356 mm) - Permanent, for hardwired installation

Non-Adjustable Tubular Stands (choose clearance and color below)
☐10" (254 mm) ☐12" (305 mm) ☐14" (356 mm) ☐16" (406 mm)
Designer Color or Gloss Finish for Stands† (clear anodized standard)
☐Warm Red ☐Black ☐Gray Granite ☐White Granite
☐Navy Blue ☐Hunter Green ☐Antique Copper ☐Radiant Red
☐Glossy Gray ☐Bold Black ☐Gleaming Gold ☐Brilliant Blue

C-Leg Stands - Portable, for cord & plug installation
☐Standard Watt - 10" (254) clearance - for models up to 72" (1829 mm) wide
☐High Watt - 13.5" (343 mm) clearance - for models up to 72"(1829 mm) wide

T-Leg Stands - for models up to 72" (1829 mm) wide, specify clearance - Portable, for cord & plug installation
☐10" (254 mm) (Standard Watt) ☐13.5" (343 mm) ☐16" (406 mm) ☐18" (457 mm)

☐Attached 6' (1829 mm) Cord & Plug Set on 120V models up to 72" (1829 mm) wide requires Standard Chain Mount Kit (two S hooks with two 6" (153 mm) lengths of chain), or add optional C-leg stands, or T-leg stands (see specific model for plug configuration)

☐Two S hooks with two 6" (153 mm) lengths of chain - Stationary, for cord & plug installation

☐Attached 6' (1829 mm) Cord & Plug Set on Export Price List models up to 96" (2438 mm) wide

Accessories

Adjustable Angle Brackets (with clearance above unit)
☐1"-2" (25-51 mm) ☐7" (178 mm) - GRA models only

☐Chain Suspension

MADE IN THE USA

Crabtree McGrath Associates, Inc.

Fuller Middle School
Framingham, MA

Item #: 48
Quantity: 2

Glo-Ray® Aluminum Infrared Strip Heaters

Models: GRA-18, -24, -30, -36, -42, -48, -54, -60, -66, -72, -84, -96, -108, -120, -132, -144
GRAH-18, -24, -30, -36, -42, -48, -54, -60, -66, -72, -84, -96, -108, -120, -132, -144

GRA and GRAH

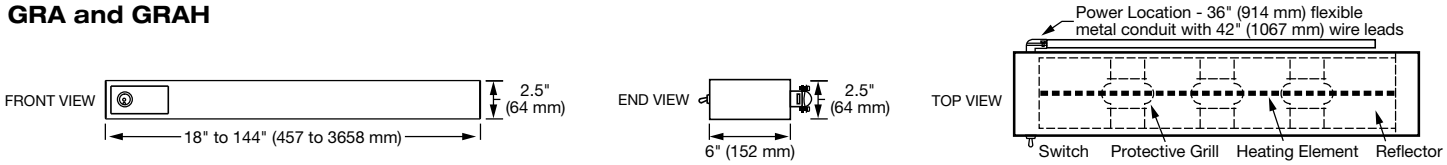

SPECIFICATIONS

Glo-Ray® Aluminum Infrared Strip Heaters

Phase: All Single Phase

Amps: Amps on all models vary based on configuration – please consult factory.

The shaded areas contain electrical information for International models

Standard Watt			High Watt			Both Models		
Model	Volts	Watt	Model	Volts	Watt	Width x Depth x Height	Plug (Optional)	Ship Weight.*
GRA-18	120	250	GRAH-18	120	350	18" x 6" x 2.5" (457 x 153 x 64 mm)	NEMA 5-15P	7 lbs. (4 kg.)
	208			208			–	
	240			240				
	–	–		100	350		–	
	200	231		200	324			
	220	250		220	350		CEE 7-7 Schuko BS-1363	
	240			240				
	220-230 (CE)♦	250-273		220-230 (CE)♦	350-383			
	230-240 (CE)♦	230-250		230-240 (CE)♦	321-350			
GRA-24	120	350	GRAH-24	120	500	24" x 6" x 2.5" (610 x 153 x 64 mm)	NEMA 5-15P	8 lbs. (4 kg.)
	208			208			–	
	240			240				
	–	–		100	500		–	
	200	324		200	462			
	220	350		220	500		CEE 7-7 Schuko BS-1363	
	240			240				
	220-230 (CE)♦	350-383		220-230 (CE)♦	500-547			
	230-240 (CE)♦	321-350		230-240 (CE)♦	459-500			
GRA-30	120	450	GRAH-30	120	660	30" x 6" x 2.5" (762 x 153 x 64 mm)	NEMA 5-15P	9 lbs. (5 kg.)
	208			208			–	
	240			240				
	–	–		100	660		–	
	200	416		200	610			
	220	450		220	660		CEE 7-7 Schuko BS-1363	
	240			240				
	220-230 (CE)♦	450-492		220-230 (CE)♦	660-721			
	230-240 (CE)♦	413-450		230-240 (CE)♦	606-660			
GRA-36	120	575	GRAH-36	120	800	36" x 6" x 2.5" (914 x 153 x 64 mm)	NEMA 5-15P	9 lbs. (5 kg.)
	208			208			–	
	240			240				
	–	–		100	800		–	
	200	532		200	740			
	220	575		220	800		CEE 7-7 Schuko BS-1363	
	240			240				
	220-230 (CE)♦	575-629		220-230 (CE)♦	800-875			
	230-240 (CE)♦	528-575		230-240 (CE)♦	735-800			
GRA-42	120	675	GRAH-42	120	950	42" x 6" x 2.5" (1067 x 153 x 64 mm)	NEMA 5-15P	12 lbs. (6 kg.)
	208			208			–	
	240			240				
	–	–		100	950		–	
	200	624		200	878			
	220	675		220	950		CEE 7-7 Schuko BS-1363	
	240			240				
	220-230 (CE)♦	675-738		220-230 (CE)♦	950-1038			
	230-240 (CE)♦	620-675		230-240 (CE)♦	873-950			
GRA-48	120	800	GRAH-48	120	1100	48" x 6" x 2.5" (1219 x 153 x 64 mm)	NEMA 5-15P	13 lbs. (6 kg.)
	208			208			–	
	240			240				
	–	–		100	1100		–	
	200	740		200	1017			
	220	800		220	1100		CEE 7-7 Schuko BS-1363	
	240			240				
	220-230 (CE)♦	800-874		220-230 (CE)♦	1100-1202			
	230-240 (CE)♦	735-800		230-240 (CE)♦	1010-1100			

* Shipping weight includes packaging and does not include RMB.

♦ CE approved units for 220–230V utilize a 220V heating system; 230–240V CE units utilize a 240V heating system.

Crabtree McGrath Associates, Inc.

Fuller Middle School
Framingham, MA

Item #: 48
Quantity: 2

Glo-Ray® Aluminum Infrared Strip Heaters

Models: GRA-18, -24, -30, -36, -42, -48, -54, -60, -66, -72, -84, -96, -108, -120, -132, -144
GRAH-18, -24, -30, -36, -42, -48, -54, -60, -66, -72, -84, -96, -108, -120, -132, -144

SPECIFICATIONS

Glo-Ray® Aluminum Infrared Strip Heaters
Phase: All Single Phase
Amps: Amps on all models vary based on configuration – please consult factory.

The shaded areas contain electrical information for International models

Standard Watt			High Watt			Both Models		
Model	**Volts**	**Watt**	**Model**	**Volts**	**Watt**	**Width x Depth x Height**	**Plug (Optional)**	**Ship Weight.***
GRA-54	120	925	GRAH-54	120	1250	54" x 6" x 2.5" (1372 x 153 x 64 mm)	NEMA 5-15P	14 lbs. (7 kg.)
	208			208			–	
	240			240				
	200	855		200	1156		–	
	220	925		220	1250		CEE 7-7 Schuko BS-1363	
	240			240				
	220-230 (CE)♦	925-1011		220-230 (CE)♦	1250-1366			
	230-240 (CE)♦	850-925		230-240 (CE)♦	1148-1250			
GRA-60	120	1050	GRAH-60	120	1400	60" x 6" x 2.5" (1524 x 153 x 64 mm)	NEMA 5-15P	16 lbs. (8 kg.)
	208			208			–	
	240			240				
	200	971		200	1295		–	
	220	1050		220	1400		CEE 7-7 Schuko BS-1363	
	240			240				
	220-230 (CE)♦	1050-1148		220-230 (CE)♦	1400-1530			
	230-240 (CE)♦	964-1050		230-240 (CE)♦	1286-1400			
GRA-66	120	1160	GRAH-66	120 •	1560	66" x 6" x 2.5" (1676 x 153 x 64 mm)	NEMA 5-15P➤	16 lbs. (8 kg.)
	208			208			–	
	240			240				
	200	1073		200	1442		–	
	220	1160		220	1560		CEE 7-7 Schuko BS-1363	
	240			240				
	220-230 (CE)♦	1160-1268		220-230 (CE)♦	1560-1705			
	230-240 (CE)♦	1066-1160		230-240 (CE)♦	1433-1560			
GRA-72	120	1275	GRAH-72	120 •	1725	72" x 6" x 2.5" (1829 x 153 x 64 mm)	NEMA 5-15P➤	18 lbs. (9 kg.)
	208			208			–	
	240			240				
	200	1179		200	1595		–	
	220	1275		220	1725		CEE 7-7 Schuko BS-1363	
	240			240				
	220-230 (CE)♦	1275-1394		220-230 (CE)♦	1725-1886			
	230-240 (CE)♦	1171-1275		230-240 (CE)♦	1584-1725			
GRA-84‡	120 •	1500	GRAH-84‡	120 ♣	2050	84" x 6" x 2.5" (2134 x 153 x 64 mm)	–	19 lbs. (9 kg.)
	208			208				
	240			240				
	200	1387		200	1895		–	
	220	1500		220	2050		CEE 7-7 Schuko BS-1363	
	240			240				
GRA-96‡	120 •	1725	GRAH-96‡	120 ♣	2400	96" x 6" x 2.5" (2438 x 153 x 64 mm)	–	21 lbs. (10 kg.)
	208			208				
	240			240				
	200	1595		200	2219		–	
	220	1725		220	2400		CEE 7-7 Schuko BS-1363	
	240			240				
GRA-108‡♣	120	1850	GRAH-108‡♣	120	2500	108" x 6" x 2.5" (2743 x 153 x 64 mm)	–	23 lbs. (11 kg.)
	208			208				
	240			240				
	200	1710		200	2311			
	220	1850		220	2500			
	240			240				
GRA-120‡♣	120	2100	GRAH-120‡♣	120	2800	120" x 6" x 2.5" (3048 x 153 x 64 mm)	–	26 lbs. (12 kg.)
	208			208				
	240			240				
	200	1942		200	2589			
	220	2100		220	2800			
	240			240				

* Shipping weight includes packaging and does not include RMB.
♦ CE approved units for 220–230V utilize a 220V heating system; 230–240V CE units utilize a 240V heating system.
• 120V models with infinite switch require tandem (end-to-end) elements, consult factory for applications.
♣ Glo-Ray models 108"–144" (2743-3048 mm) wide and 120V models of GRAH-84 and GRAH-96 contain tandem (end-to-end) elements that may be individually controlled.
‡ Not available with CE Mark.
➤ GRAH-66 and GRAH-72 require NEMA 5-20P cord for Canada.

Crabtree McGrath Associates, Inc.

Fuller Middle School
Framingham, MA

Item #: 48
Quantity: 2

Glo-Ray® Aluminum Infrared Strip Heaters

Models: GRA-18, -24, -30, -36, -42, -48, -54, -60, -66, -72, -84, -96, -108, -120, -132, -144
GRAH-18, -24, -30, -36, -42, -48, -54, -60, -66, -72, -84, -96, -108, -120, -132, -144

SPECIFICATIONS

Glo-Ray® Aluminum Infrared Strip Heaters

Phase: All Single Phase
Amps: Amps on all models vary based on configuration – please consult factory.

The shaded areas contain electrical information for International models

Standard Watt			High Watt			Both Models		
Model	**Volts**	**Watt**	**Model**	**Volts**	**Watt**	**Width x Depth x Height**	**Plug (Optional)**	**Ship Weight.***
GRA-132‡♣	120	2320	GRAH-132‡♣	120	3120	132" x 6" x 2.5" (3353 x 153 x 64 mm)	–	30 lbs. (14 kg.)
	208			208				
	240			240				
	200	2145		200	2885			
	220	2320		220	3120			
	240	2320		240	3120			
GRA-144‡♣	120	2550	GRAH-144‡♣	120	3450	144" x 6" x 2.5" (3658 x 153 x 64 mm)	–	33 lbs. (15 kg.)
	208			208				
	240			240				
	200	2358		200	3190			
	220	2550		220	3450			
	240	2550		240	3450			

* Shipping weight includes packaging and does not include RMB.
♣ Glo-Ray models 108"–144" (2743-3048 mm) wide and 120V models of GRAH-84 and GRAH-96 contain tandem (end-to-end) elements that may be individually controlled.
‡ Not available with CE Mark.

TOGGLE SWITCH

Toggle Switch: Max. 15 amps. Location: Chef's left side standard, other options available.

INFINITE SWITCH

Max. 12.2 amps

LEADS

36" (914 mm) flexible metal conduit with 42" (1067) wire leads.
USA/Canada: 3' (914 mm) conduit with leads – server's right.
Export/Euro: 6" (152 mm) leads – server's right.

PLUG CONFIGURATIONS

Please refer to electrical specification chart.

NEMA 5-15P

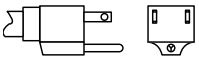

NEMA 5-20P

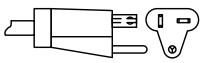

CEE 7-7 Schuko

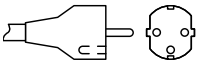

BS-1363

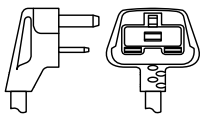

RECOMMENDED MOUNTING HEIGHTS

(Refer to the Installation section of the Manual on the Hatco website)
Standard Watt: 8"-11" (203-279 mm) **High Watt:** 11"-14" (279-356 mm)

MINIMUM CLEARANCES

Combustibles

Below overshelf:1" (25 mm) clearance.
Unit to surface below: High watt, 13.5" (343 mm) or Standard watt - 10" (254 mm).
Unit to wall: 3" (76 mm).

Non-Combustibles

Hardwired with Built-In Switches:
Must be installed in a pass through area.
Below overshelf: 1" (25 mm) clearance.
Unit to surface below:
High watt with infinite control or indicator light - 10" (254 mm).
High watt with On/Off toggle switch - 8" (203 mm).

Corded Units with Built-In Switches:
Must be installed in a pass through area.
Below overshelf: 3" (76 mm) clearance.
Unit to surface below: High watt: 11" (279 mm) or Standard watt: 10" (254 mm).

Hardwired Units with Remote Switches:
May be installed against a non-combustible back wall and flush to an overshelf.
Unit to surface below: 8" (203 mm).
Setback from the front of an overshelf: Maximum 10" (254 mm).

REMOTE CONTROL ENCLOSURES

RMB series uses one Control Box per Strip Heater - If RMB2 series is used, multiple warmers can be controlled from one box (U.S., Canada only). CE models require any remote switches be contained in a Remote Control Enclosure. For more details, see "Choose Remote Box" section listed under "Resources" on the Hatco website, or consult Price List.

Model	Width	Maximum Infinite/Toggle Switches	
		U.S., Canada, Export U.S. Dollar	Euro
RMB-3	6" (150 mm)	1 infinite or 2 toggle	1 infinite or 2 toggle
RMB-7	9.375" (239 mm)	2 infinite or 4 toggle	2 infinite or 3 toggle
RMB-14	14.375" (366 mm)	4 infinite or 6 toggle	4 infinite or 4 toggle
RMB-16	16.375" (417 mm)	4 infinite with 1 toggle	–
RMB-20	20.375" (518 mm)	4 infinite with 3 toggle	–
RMB2-1R	11" (279 mm)	1 toggle, 1 infinite, 1 relay, 1 indicator light	–
RMB2-2R	14" (356 mm)	1 toggle, 1 infinite, 2 relays, 1 indicator light	–

PRODUCT SPECS

Infrared Foodwarmer

The Infrared Foodwarmer shall be a Glo-Ray®, manufactured by the Hatco Corporation, Milwaukee, WI 53234 U.S.A.

The Strip Heater shall be a Glo-Ray model ... , rated at ... watts, ... volts, single phase and be ... inches (millimeters) in overall width. The Glo-Ray shall consist of an aluminum housing and include as standard equipment four stainless steel shelf mounting tabs and an on-off switch may be optionally installed remotely or to either the front or rear of the unit. The infrared heating element shall be tubular metal sheathed. The foodwarmer shall be factory assembled ready for electrical installation. Options and accessories shall include adjustable or non-adjustable tubular stand, C-leg stand, T-leg stand, angle brackets, suspension chain and fittings, sneeze guard, cord and plug set, indicator light, and infinite control – remote or built-in.

24/7 parts and service assistance (U.S. and Canada only)

Crabtree McGrath Associates, Inc.

Fuller Middle School
Framingham, MA

Item #: 48
Quantity: 2

Item No. _____
Quantity _____

BEVERAGE-AIR

3779 Champion Blvd., Winston-Salem, NC 27105
1-888-845-9800 Fax# 1-336-245-6453
http://www.Beverage-Air.com

Commercial Refrigeration Equipment
General Specification

SCHOOL MILK COOLERS
DUAL ACCESS, FORCED-AIR
STF SERIES

MODELS:
STF49
STF58

3 Year Parts/Labor Warranty
Additional 2 Year Compressor Warranty

STF SERIES—DUAL ACCESS, FORCED-AIR
Dual-access, Twin top, forced-air milk coolers are designed to hold milk between 36°F to 38°F until ready to serve. Produced in two sizes to hold 12 and 16 milk cases (13" x 13" x 11") per unit. Units will also accommodate (19" x 13" x 11") milk cases.

CABINET CONSTRUCTION
Standard construction includes the lid, door, adjustable hinges, and door latches made from stainless steel. Balance of exterior is white finish on steel. One-piece, reinforced stainless steel floor for maximum milk crate support. Balance of interior is galvanized steel. Heavy-duty, epoxy coated steel wire floor racks are provided for added floor protection. Floor drain is centrally located for easy cleaning, connecting to drain hose with hose adapter.

Doors are fitted with flexible compression gaskets to ensure tight seal. All steel construction with 3-screw hinges add to model durability. Self-latching doors provide added convenience with safety bumpers standard.

Digital exterior thermometer, cylinder lock, bottom drain, latch safety bumpers and swivel casters (2 with locks) are provided as standard.

Foamed-in-place CFC and HCFC-free polyurethane insulation enhances the structural strength of the cabinet and helps increase energy efficiency. This insulation helps to prevent liquid penetration that results in foul odors. Overall depth of 33 1/2" allows easy mobility and clear passage through most doorways.

Models are also offered with stainless steel exterior in place of white finish on steel. A stainless steel interior is optionally available. Additional options include wrap around and corner bumpers.

REFRIGERATION
Refrigeration system uses R134a refrigerant, which is CFC and HCFC-free for compliance with environmental safety concerns. Dual evaporator evens airflow throughout coolers, completely enveloping contents in a blanket of cold air.

ELECTRICAL
Units wired at factory and ready for connection to a 115/60/1 phase, 15 amp dedicated outlet. 8' long cord and plug set included.

SPECIAL FEATURES
- One-piece, reinforced stainless steel floor for maximum support of milk crates.
- Stainless options available.

STF49 **(white exterior shown)**

STF58 **(stainless exterior shown)**

ELECTRICAL CONNECTION

115/60/1
NEMA-5-15P

Units pre-wired at factory and include 8' long cord and plug set.

Available From:

Crabtree McGrath Associates, Inc.

Fuller Middle School
Framingham, MA

Item #: 50
Quantity: 1

Model Specified	_____	**Store#**	_____
Location	_____	**Quantity**	_____

BEVERAGE-AIR

STF SERIES School Milk Coolers
Models: STF49, STF58

MODEL	STF49	STF58
EXTERNAL DIMENSIONAL DATA		
Length Overall (inches) Length Overall (mm)	49" 1245	58" 1473
Depth Overall (inches) Depth Overall (mm)	34 3/16" 868	34 3/16" 868
Height Overall— (inches) Height Overall—(mm)	48" 1219	48" 1219
Number of doors/lids	4	4
INTERNAL DIMENSIONAL DATA		
NET Capacity (cubic ft.) NET Capacity (Liters)	20.5 581	24.5 694
CASE CAPACITIES		
13" x 13" x 11"	12	16
19" x 13" x 11"	8	10
ELECTRICAL DATA		
Full Load Amperes 115/60/1	10.1	10.1
ENERGY CONSUMPTION (KWH)	8.35	5.65
REFRIGERATION DATA		
Horsepower	1/2	1/2
WEIGHT DATA		
Gross Weight (Crated lbs)	315	463
Gross Weight (Crated kg)	143	210

***Note**: Not all markings may apply to all model variations.

PLAN VIEWS

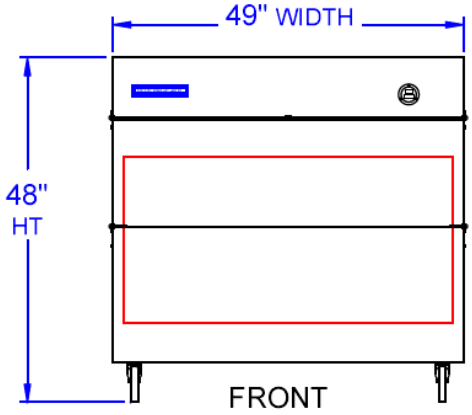

STF49

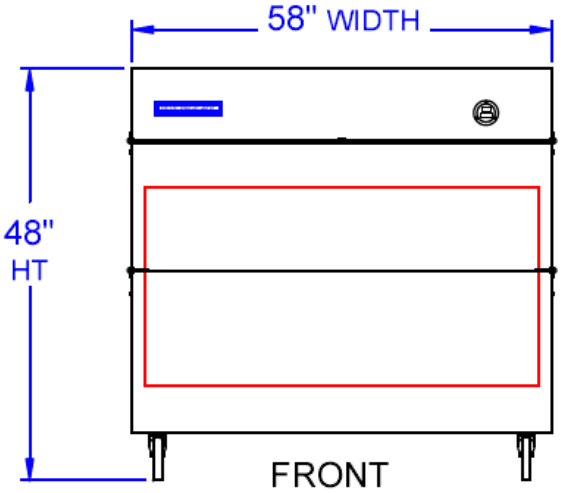

STF58

ELECTRICAL CONNECTION
Units pre-wired at factory and include 8' long cord and plug set.

115/60/1
NEMA-5-15P

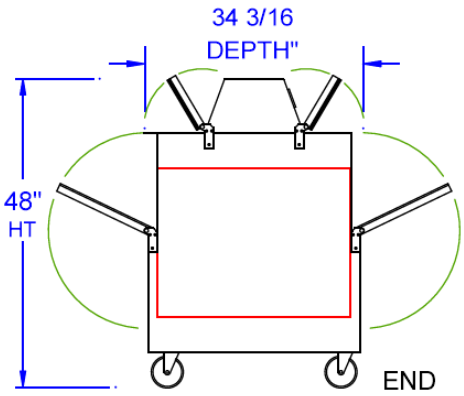

Crabtree McGrath Associates, Inc.

Fuller Middle School
Framingham, MA

Item #: 50
Quantity: 1

ITEM 51

CUSTOM FABRICATED FOODSERVICE EQUIPMENT

DESCRIPTION: **Mobile Cashier Stand**

NO CUT SHEET AVAILABLE

CONSTRUCTION FEATURES:

Make - Fabricate per General Construction this Section
Size - 54" x 27" x 34" high
Construction - 14 gauge stainless steel top over angle frame with all edges turned down 2" and corners welded. Mount on four legs with crossrails on three sides, footrest set in 8", undershelf and plastic laminate clad panels on three sides. Provide 5" diameter swivel casters; two with brakes.

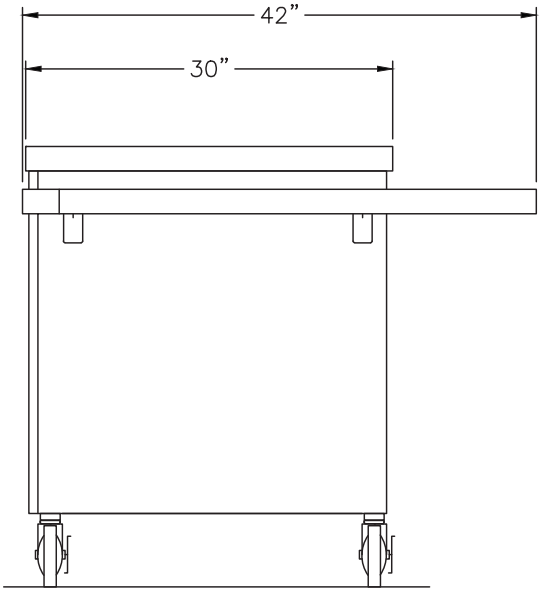

SIDE ELEVATION VIEW
SCALE 1"=1'-0"

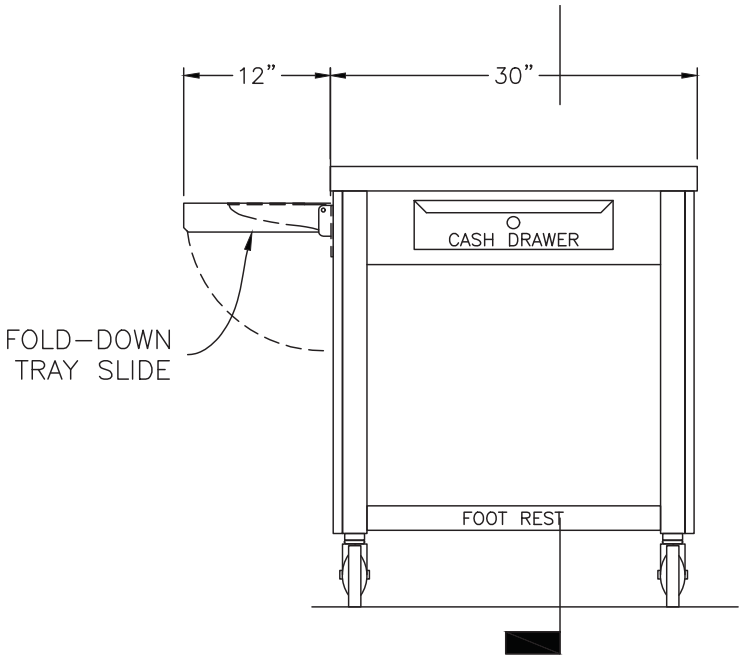

CASHIER ELEVATION VIEW
SCALE 1"=1'-0"

ITEM 52

RELATED EQUIPMENT PROVIDED BY OTHERS

DESCRIPTION: **POS Terminals**

PROVIDED BY:

- ✓ Owner
- ◊ Vendor
- ◊ Caterer
- ◊ General Contractor
- ◊ Plumbing Contractor
- ◊ Electrical Contractor
- ◊ Ventilation Contractor

INSTALLED BY:

- ✓ Owner
- ◊ Vendor
- ◊ Caterer
- ◊ General Contractor
- ◊ Plumbing Contractor
- ◊ Electrical Contractor
- ◊ Ventilation Contractor
- ◊ Kitchen Equipment Contractor

ITEM 53

CUSTOM FABRICATED FOODSERVICE EQUIPMENT

DESCRIPTION: **Mobile Cashier Stand**

NO CUT SHEET AVAILABLE

CONSTRUCTION FEATURES:

Make - Fabricate per General Construction this Section
Size - 54" x 27" x 34" high
Construction - 14 gauge stainless steel top over angle frame with all edges turned down 2" and corners welded. Mount on four legs with crossrails on three sides, footrest set in 8", undershelf and plastic laminate clad panels on three sides. Provide 5" diameter swivel casters; two with brakes.

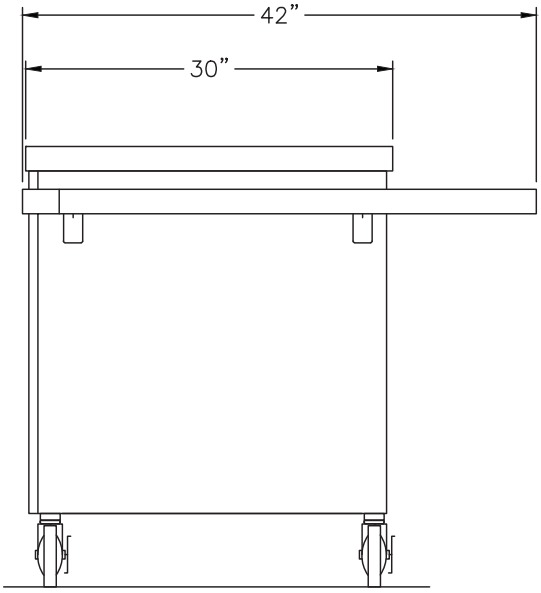

SIDE ELEVATION VIEW
SCALE 1"=1'-0"

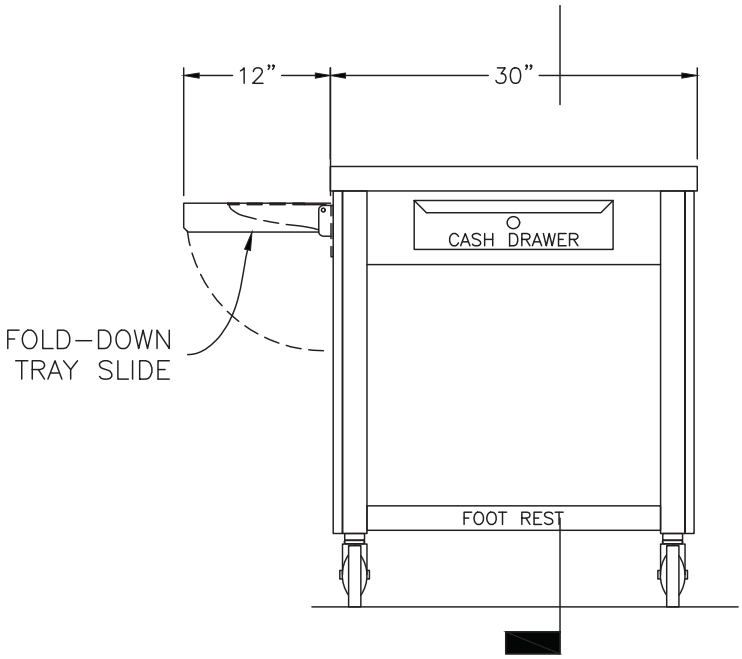

CASHIER ELEVATION VIEW
SCALE 1"=1'-0"

ITEM 55

CUSTOM FABRICATED FOODSERVICE EQUIPMENT

DESCRIPTION: **Mobile Condiment Counter**

NO CUT SHEET AVAILABLE

CONSTRUCTION FEATURES:

Make - Fabricate per General Construction this Section
Size - 72" x 27" x 34" high
Construction - 14 gauge stainless steel top over angle frame with all edges turned down 2" and corners welded. Mount on four legs with crossrails, undershelf and plastic laminate clad panels on three sides. Provide 5" diameter swivel casters; two with brakes.

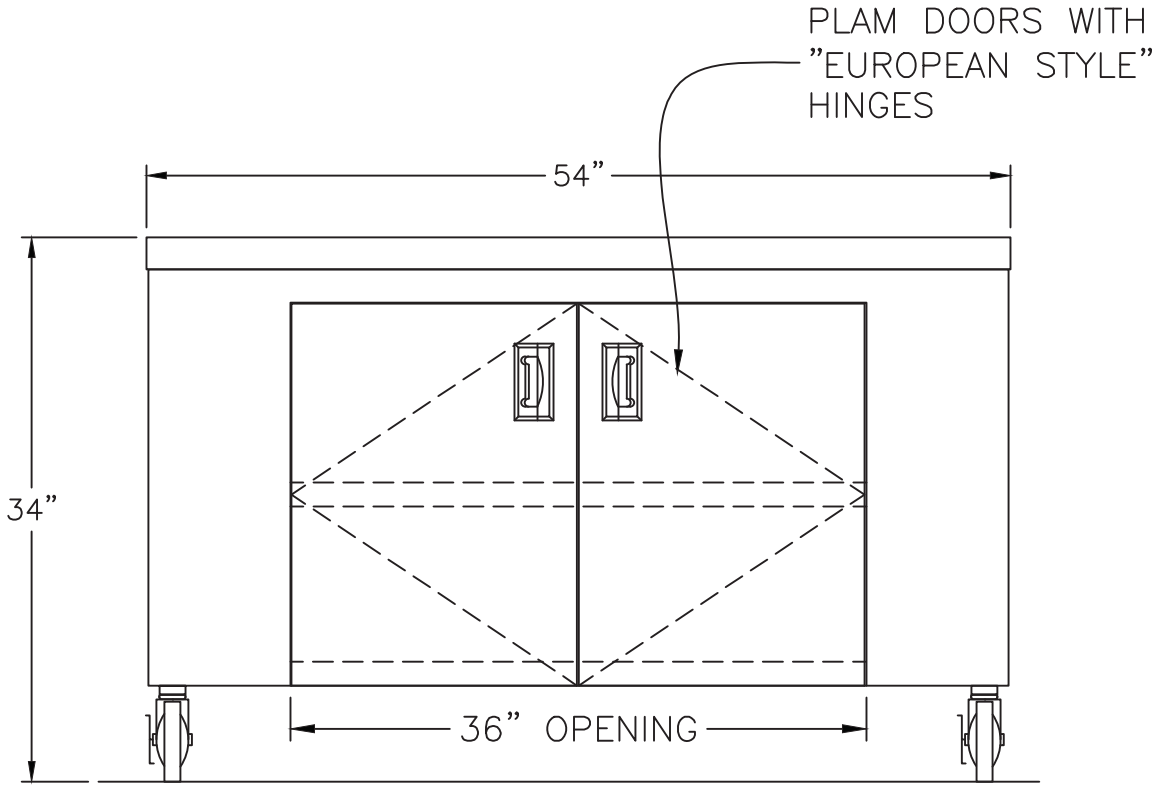

FRONT ELEVATION VIEW

SCALE 1"=1'-0"

DOOR NUMBER	QTY	OPENING		MODEL	GA.	"A"	"B"	"C"	"D"	"E"	"F"	"G"	"H"	"J"	MOUNT TYPE	OPER.	DRIVE	JAMB TYPE	GUIDE
		WIDTH	HEIGHT																

JOB:

DISTRIBUTOR:

CONTRACTOR:

ARCHITECT:

RAYNOR

NR: 2901843

DURASHUTTER

DURASHUTTER CA
INTERIOR FACE MOUNT
MANUAL LIFT.

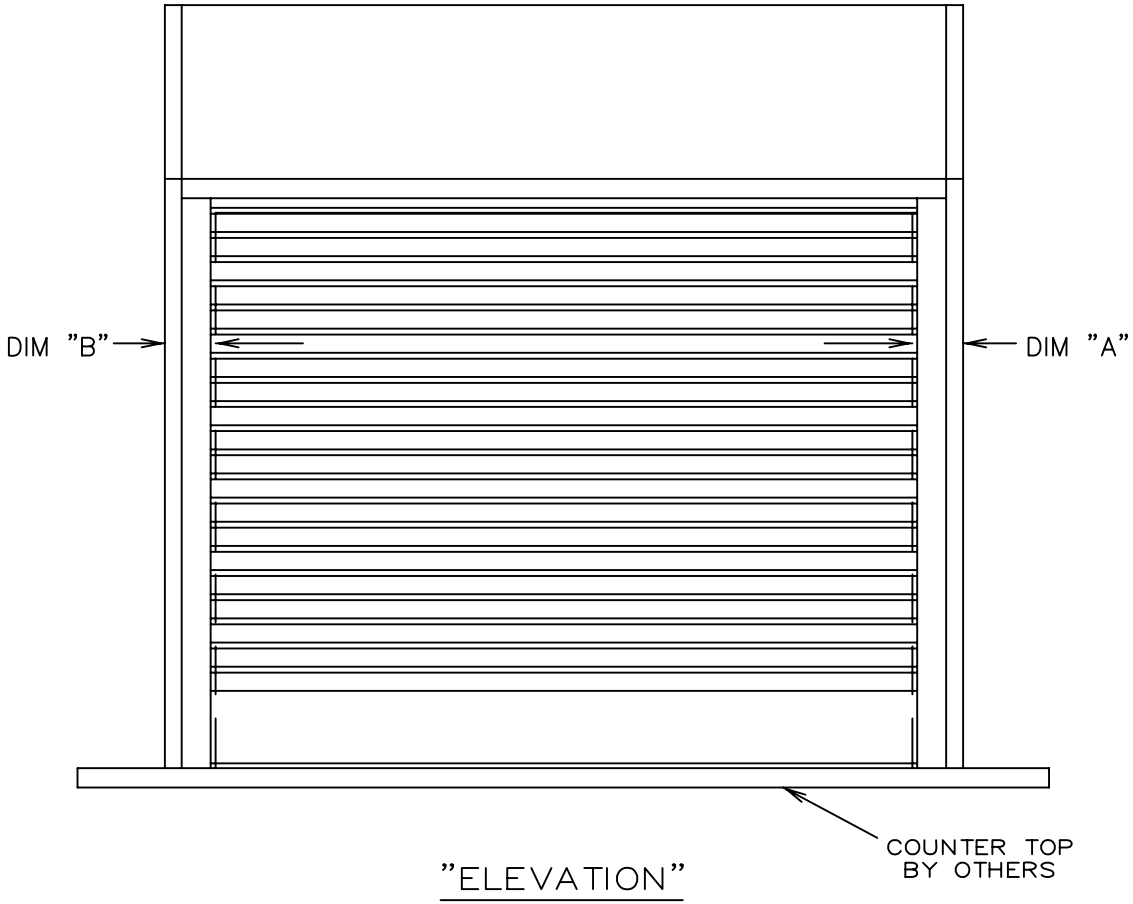

"ELEVATION"

☐ LEFT HAND DRIVE (SHOWN)

☐ RIGHT HAND DRIVE

DOORS SHALL BE ROLLING STEEL MODEL DURACURTAIN "SELECT" (COUNTER SHUTTER) AS MANUFACTURED BY RAYNOR GARAGE DOORS.

BARREL– STRUCTURAL STEEL PIPE, MINIMUM 4–1/2"(114.3mm) O.D. X.120" (3.0mm) WALL THICKNESS AND DESIGNED TO LIMIT MAXIMUM DEFLECTION, UNDER LOAD, TO .03"(0.76mm) PER FOOT OF SPAN.

SPRING COUNTERBALANCE– THE CURTAIN SHALL BE COUNTERBALANCED BY MEANS OF OIL TEMPERED, HELICAL TORSION SPRINGS, GREASE–PACKED AND MOUNTED ON A SINGLE CONTINUOUS STEEL TORSION SHAFT. SPRINGS SHALL BE COMPRESSION SPRING DESIGN TO FACILITATE ANY COUNTERBALANCE MAINTENANCE. CAST IRON SPRING ANCHORS SHALL TRANSFER FULL SPRING LOADING TO THE BARREL.

BRACKETS– 10 GAUGE GALVANIZED STEEL WITH FLANGED MOUNTING SURFACE FOR HOOD ATTACHMENT. INSIDE SURFACE SHALL BE FLUSH WITH GUIDE GROOVE. DRIVE SIDE BRACKET SHALL BE FITTED WITH A SEALED BALL BEARING FOR CONTINUED PERFORMANCE.

MODEL CA

CURTAIN– SHALL BE INTERLOCKING, FLAT FACED, EXTRUDED ALUMINUM (6063–T5) SLATS .05"(1.3mm) THICK. BOTTOM OF CURTAIN TO BE EXTRUDED ALUMINUM (6063–T5) HAVING A HOLLOW RECTANGULAR CROSS SECTION WITH A VINYL ASTRAGAL.

GUIDES– SHALL BE EXTRUDED ALUMINUM (6063–T5) WITH WOOL PILE INSERTS ON BOTH SIDES, AND WITH REMOVABLE BELLMOUTH CURTAIN STOPS.

HOOD & SIDE COVER– SHALL BE .04"(1.0mm) THICK ALUMINUM. HOOD TO HAVE ROLLED EDGES TO PROVIDE RIGIDITY.

FINISH – GUIDES, SLATS, BOTTOM BAR, SIDE COVERS AND HOOD TO BE CLEAR ANODIZED 204–R1 FINISH.

☐ LOCKING– SLIDE BOLT TO ENGAGE GUIDE WITH PROVISION FOR PADLOCK. (PADLOCK BY OTHERS) QUANTITY REQUIRED ☐

☐ LOCKING– FIVE PIN TUMBLER CYLINDER WITH LOCK BARS TO ENGAGE THE GUIDE. QUANTITY REQUIRED ☐

☐ LOCK–OPERABLE FROM INTERIOR ONLY.

☐ LOCK–OPERABLE FROM EXTERIOR ONLY.

☐ LOCK–OPERABLE FROM BOTH INTERIOR AND EXTERIOR

DOORS OVER 10'–0" (3048MM) X 7'–0" (2133.6MM) ARE STRONGLY RECOMMENDED TO BE CRANK OR TUBE MOTOR OPERATED.

SHEET

Crabtree McGrath Associates, Inc.

Fuller Middle School
Framingham, MA

Item #: 57
Quantity: 1

T&S BRASS AND BRONZE WORKS, INC.

2 Saddleback Cove / P.O. Box 1088
Travelers Rest, SC 29690

Travelers Rest, SC: 800-476-4103 • Simi Valley, CA: 800-423-0150 • Fax: 864-834-3518 • www.tsbrass.com

Model No.

B-1457-7102-01C

Item No.

This Space for Architect/Engineer Approval

Job Name_____Date_____

Model Specified_____ Quantity_____

Customer/Wholesaler_____

Contractor_____

Architect/Engineer_____

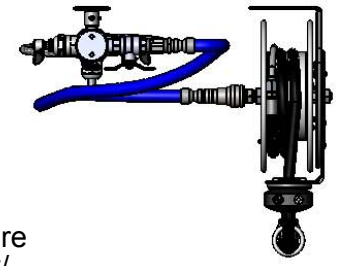

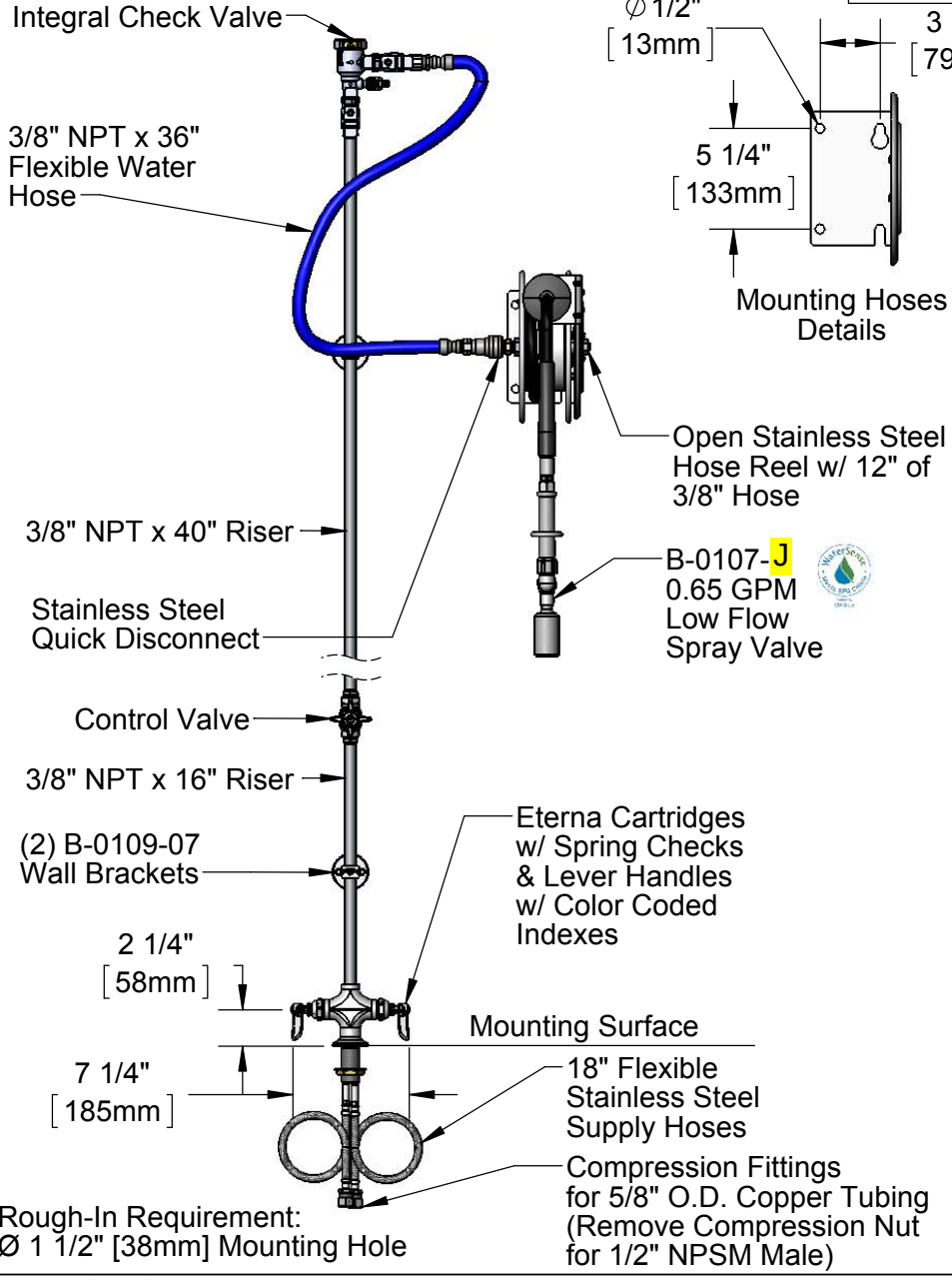

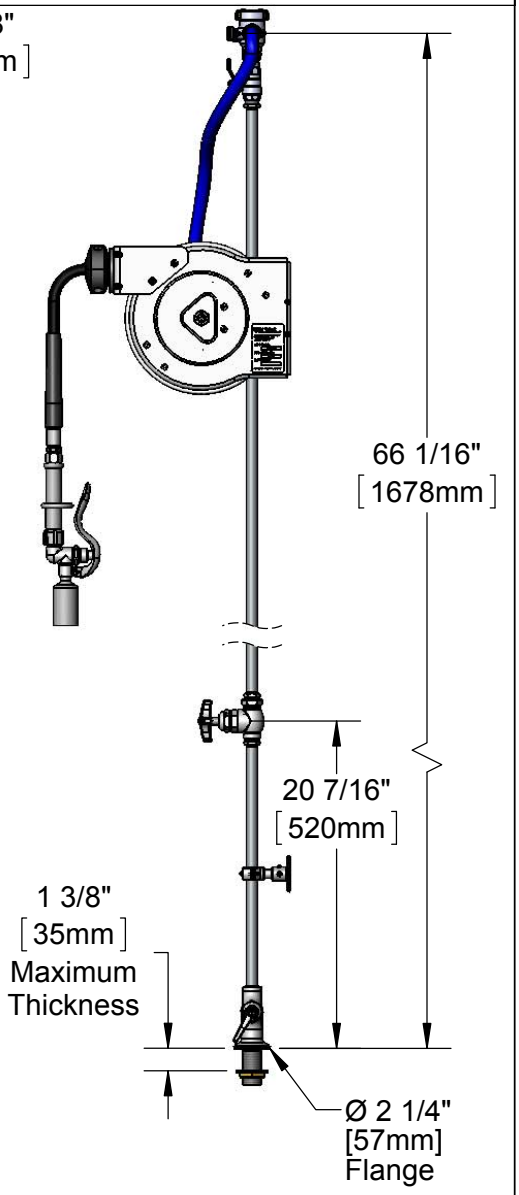

Product Specifications:

Open Stainless Steel Hose Reel w/ 12' of 3/8" Hose, Single Hole Dual Temperature Deck Mount Faucet w/ Spring Checks, 0.65 GPM Low

Product Compliance:

NSF 61 Exempt (Non-Potable)
EPAct 2005 (PRSV)

Crabtree McGrath Associates, Inc.

Fuller Middle School
Framingham, MA

Item #: 58
Quantity: 1

T&S BRASS AND BRONZE WORKS, INC.

2 Saddleback Cove / P.O. Box 1088
Travelers Rest, SC 29690

Travelers Rest, SC: 800-476-4103 • Simi Valley, CA: 800-423-0150 • Fax: 864-834-3518 • www.tsbrass.com

Model No.

B-1457-7102-01C

Item No.

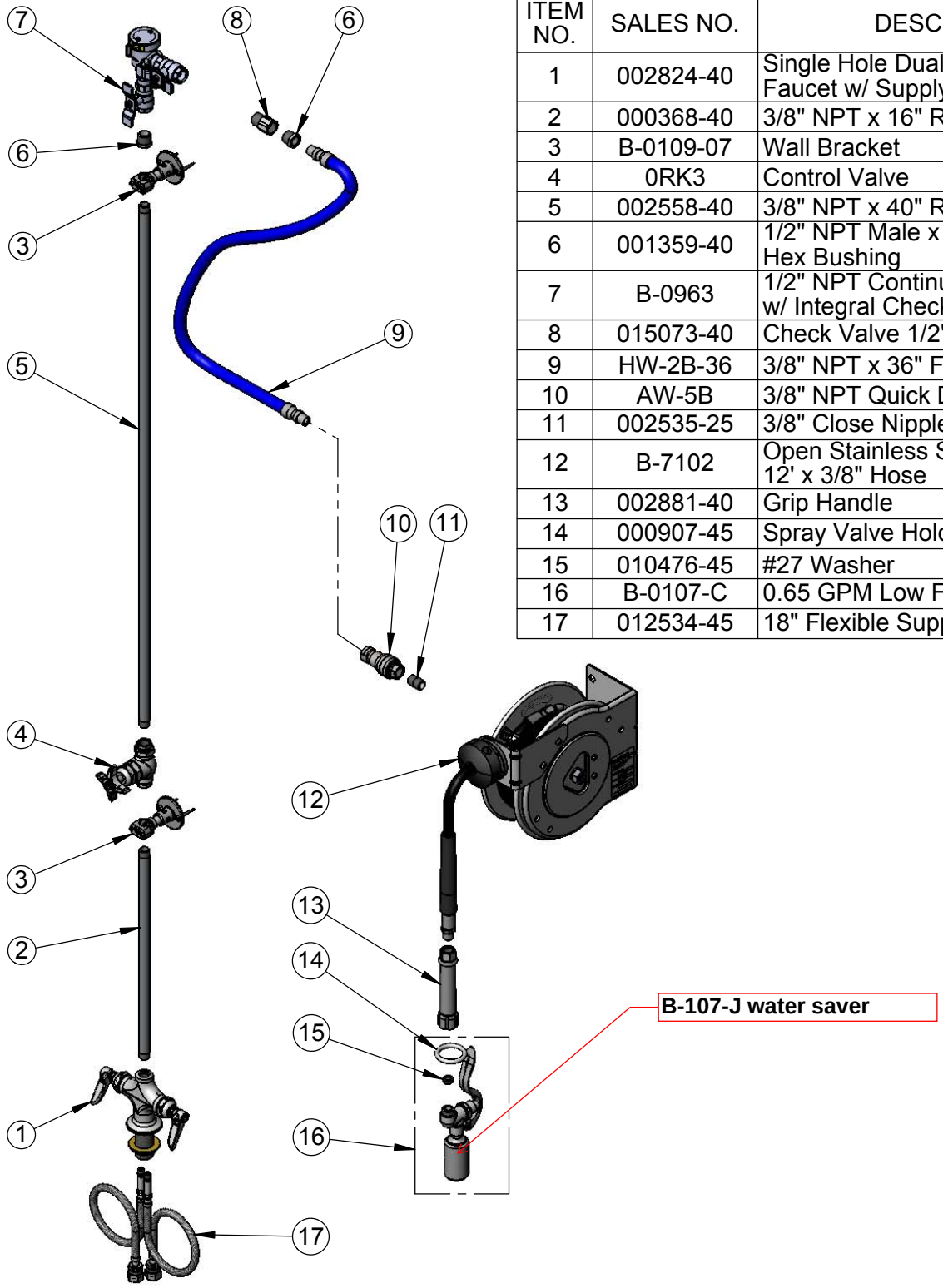

ITEM NO.	SALES NO.	DESCRIPTION
1	002824-40	Single Hole Dual Temp Mixing Faucet w/ Supply Hoses
2	000368-40	3/8" NPT x 16" Riser
3	B-0109-07	Wall Bracket
4	0RK3	Control Valve
5	002558-40	3/8" NPT x 40" Riser
6	001359-40	1/2" NPT Male x 3/8" NPT Female Hex Bushing
7	B-0963	1/2" NPT Continuous Pressure VB w/ Integral Check Valve
8	015073-40	Check Valve 1/2" NPT Adapter
9	HW-2B-36	3/8" NPT x 36" Flexible Water Hose
10	AW-5B	3/8" NPT Quick Disconnect
11	002535-25	3/8" Close Nipple
12	B-7102	Open Stainless Steel Hose Reel w/ 12' x 3/8" Hose
13	002881-40	Grip Handle
14	000907-45	Spray Valve Hold Down Ring
15	010476-45	#27 Washer
16	B-0107-C	0.65 GPM Low Flow Spray Valve
17	012534-45	18" Flexible Supply Hose (2)

Product Specifications:

Open Stainless Steel Hose Reel w/ 12' of 3/8" Hose, Single Hole Dual Temperature Deck Mount Faucet w/ Spring Checks, 0.65 GPM Low

Product Compliance:

NSF 61 Exempt (Non-Potable)
EPAct 2005 (PRSV)

Crabtree McGrath Associates, Inc.

Fuller Middle School
Framingham, MA

Item #: 58
Quantity: 1

Item # _____

Quantity _____

C.S.I. Section 11400

HOBART
701 S Ridge Avenue, Troy, OH 45374
1-888-4HOBART • www.hobartcorp.com

CL44*e* DISHWASHER

STANDARD FEATURES

- 202 racks per hour
- Opti-RinSe™ system
- Rapid Return Conveyor Drive Mechanism
- Insulated hinged double doors with door interlock switches
- 19.5 inch chamber height opening
- Top mounted micro-processer control module
- Energy saver mode
- Dirty water indicator
- Low temperature alert
- Conveyor dwell
- Delime notification
- Service diagnostics
- NAFEM Data Protocol compliant
- Computational Fluid Dynamic Designed Self-Aligning Wash Manifolds
- Stainless steel debossed anti-clogging wash arms
- Removable Integrated Pump Intake Screen
- Stainless steel self-draining pump and impeller
- Single, sloping scrap screen and deep basket
- Stainless panels enclose perimeter and bottom
- Door actuated drain closure
- Single point electrical connection (three phase only), does not include the booster heater
- Convertible hot water or low temp final rinse
- Vent fan and booster heater control

DIRECTION OF OPERATION

- ✓ Right to Left
- ❑ Left to Right

VOLTAGE

❑ 208/60/1	❑ 240/60/1	❑ 380/60/3
❑ 208/60/3	❑ 240/60/3	✓ 480/60/3
		❑ 600/60/3

MODEL

- ✓ CL44*e* – Dishwasher

OPTIONS AT EXTRA COST

- ❑ Stainless steel pressure-less 15/30 KW booster heater
- ❑ Higher than standard chamber

ACCESSORIES

- ❑ Stainless steel vent hoods
- ❑ Direct drive unloader
- ❑ Side loader
- ❑ Blower-dryer
- ❑ Drain water tempering kit
- ❑ Flanged feet kit (requires two kits)

Specifications, Details and Dimensions on Inside and Back.

HOBART

CL44*e* DISHWASHER

Crabtree McGrath Associates, Inc.

Fuller Middle School
Framingham, MA

Item #: 59
Quantity: 1

CL44*e* DISHWASHER

HOBART
701 S Ridge Avenue, Troy, OH 45374
1-888-4HOBART • www.hobartcorp.com

THE CL*e* WAREWASHER IS NOW STANDARD WITH MORE EFFICIENT FEATURES THAN EVER . . .

Inside and out the CL*e* warewashers by Hobart are packed with standard components and patented design innovations that make them the biggest value in the dishwasher industry.

The insulated hinged inspection doors provide easy access in the chamber. Exterior wash pipes and reduced interior baffles reduce clean-up time.
The Rapid Return drive allows for a wide separation between the wash and the rinse zone.

The Hobart exclusive microprocessor control module offers a choice of many features, such as an exclusive Energy Saver Mode, Low Temperature Alerts, and Dirty Water Indicator. It also displays pertinent machine status and has a Delime Notification. The controls have built-in Service Diagnostics and are NAFEM Data Protocol Compliant.

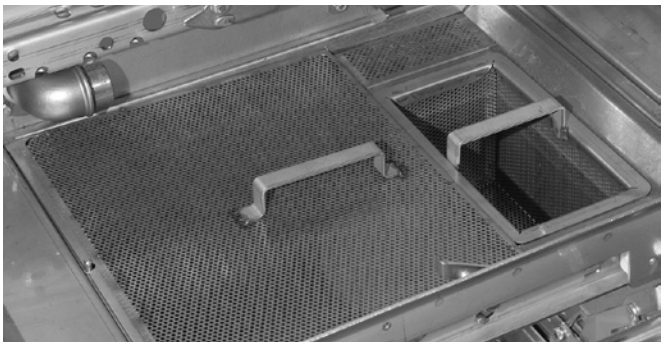

Soil Management System. Screen design sheds soil more easily than flat screens, reduces frequency of

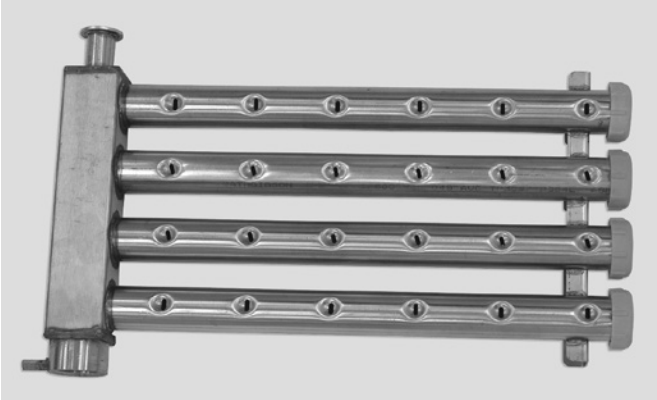

Wash Manifolds. Computational Fluid Dynamic designed wash manifolds are self-aligning and come with Hobart's signature debossed anti-clogging nozzles for superior result.

Opti-RinSe™. Hobart's exclusive Opti-RinSe™ significantly reduces operating cost by reducing rinse water and the energy required to heat the water. The unique spray pattern uses large droplets to more efficiently sanitize the ware.

OTHER STANDARD FEATURES . . .

- **Thermal Layer Curtains** help keep the heat inside the machine.
- **Ball Detent Clutch Conveyor Drive** for maximum protection against conveyor jams
- **Integrated Removable Pump Intake Screen** to offer the ultimate guard of keeping debris from entering the pump.
- **Hinged Door Seals** and stainless steel labyrinth seal for drip-free operation
- **Low-Temp Convertibility In Field.** All machines shipped hot. Change software in field at set up to low temperature if desired – then, if requirements change, convert from one mode to the other in the field. An exclusive feature – standard from Hobart.
- **Door Actuated Drain Closure.** Closing the door automatically actuates drain closure, eliminates extra manual steps, ensures that closure is in the

HOBART
701 S Ridge Avenue, Troy, OH 45374
1-888-4HOBART • www.hobartcorp.com

CL44*e* DISHWASHER

AVAILABLE OPTIONS AND ACCESSORIES . . .

Flexibility is synonymous with Hobart CL*e* dishwashers. If your operation demands a dishwasher with a vent hood, an extended hood . . . a power scrapper, just specify the combination of options that suit your needs.

Built-in Pressureless Stainless Steel Booster Heater. Interwired and interplumbed. Saves on installation and saves floor space. Simplifies operation with just one switch to power dishmachine and booster.

Side Loader. Save up to 20 square feet in the dishroom layout with an optional C-Line Side Loader. Racks are indexed 90° into the dishwasher automatically – a feature that cuts space and reduces labor dramatically. Your dishroom team will appreciate this feature.

OTHER AVAILABLE ACCESSORIES . . .

Blower-dryer, steam booster heater, and a single-point electrical connection to include electric booster

	CL44*e*
Machine Ratings (Mechanical) Racks per hour (19¾" x 19¾")	202
Conveyor Speed - feet per minute	5.6 max.
Dishes per Hour (Average 25 per rack)	5,025
Glasses per Hour (Average 45 per rack)	9,045
Floor Space – Table to Table (Inches)	44
Overall Dimensions – H x W x D (Inches)	68½ x 44¾ x 31¼
Motor H.P.	2
Conveyor Drive H.P.	⅙
Number of Tanks	1
Tank Capacity – Gallons	23
Pump Capacity – Gallons per Minute - Weir Test	165
Heating Equipment – (For keeping power wash hot) Gas Burners (with Natural Gas)	78,000 BTU per hr.
Electric Heating Unit – Size Used	15 KW
Optional Booster Heater / Final Rinse	15 KW / 30 KW
Rinse – Minutes operated during hour of maximum operation	60
Final Rinse Flow – Gals. per min. At 15 PSI Flow Pressure	1.8
At 20 PSI Flow Pressure	2.1
Final Rinse Flow – Gals. per hr. – MAXIMUM At 15 PSI Flow Pressure	108
At 20 PSI Flow Pressure	126
Rinse 20 PSI Flow Pressure Gal./Rack	Hot Water Sanitizing - Chemical Sanitizing .62 - 180°F – .62 - 120°F
Steam Consumption – Pounds per hr. - MAXIMUM Approx. 30 lbs. per hr. = 1 boiler H.P. (BHP) **Dishwasher,** based on 20 PSI steam and on customer supplying final rinse water at 180°F maximum	65
Steam Booster, if used on 20 PSI steam - 20 PSI water flowing - 130°F entering water raised to 180°F min.	60
Exhaust Requirements – Cubic Feet per minute Entrance End	200
Discharge End	400
Peak Rate of Drain Flow – Gallons per minute. (Initial rate with full tank)	38

CL44*e*
DISHWASHER

HOBART
701 S Ridge Avenue, Troy, OH 45374
1-888-4HOBART • www.hobartcorp.com

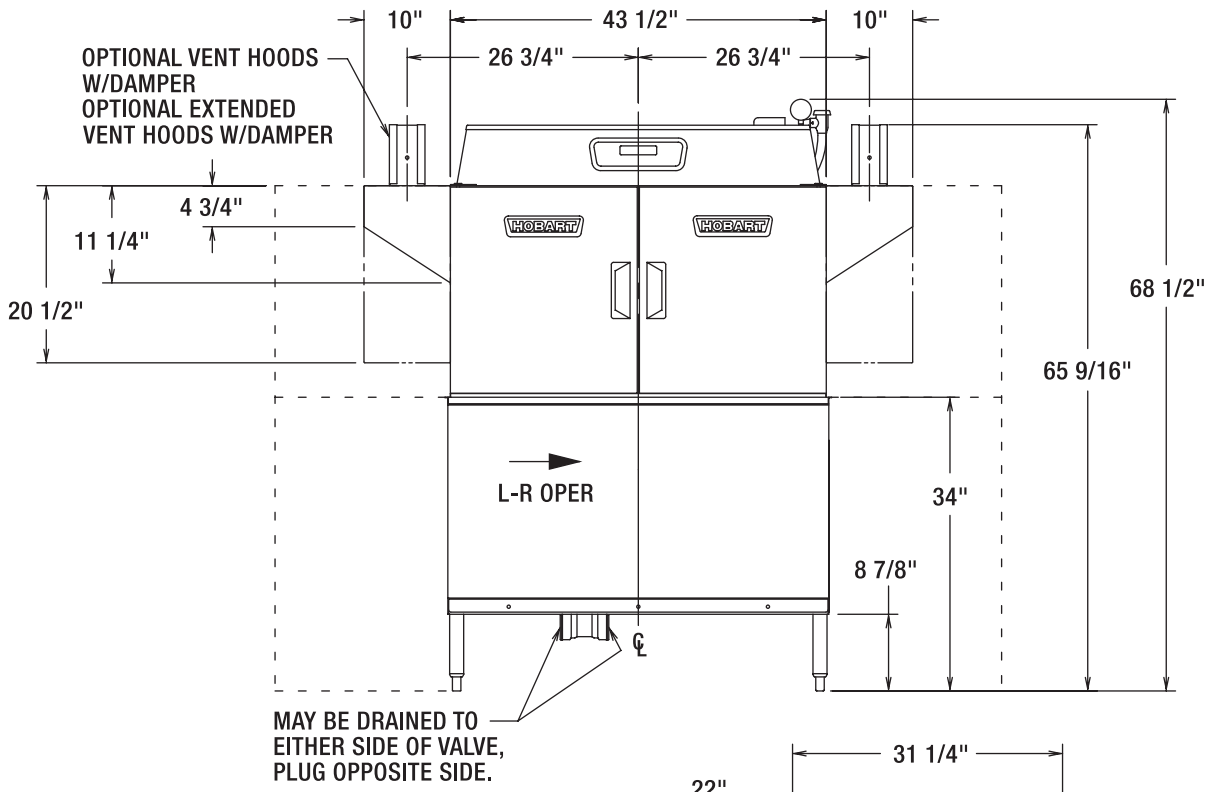

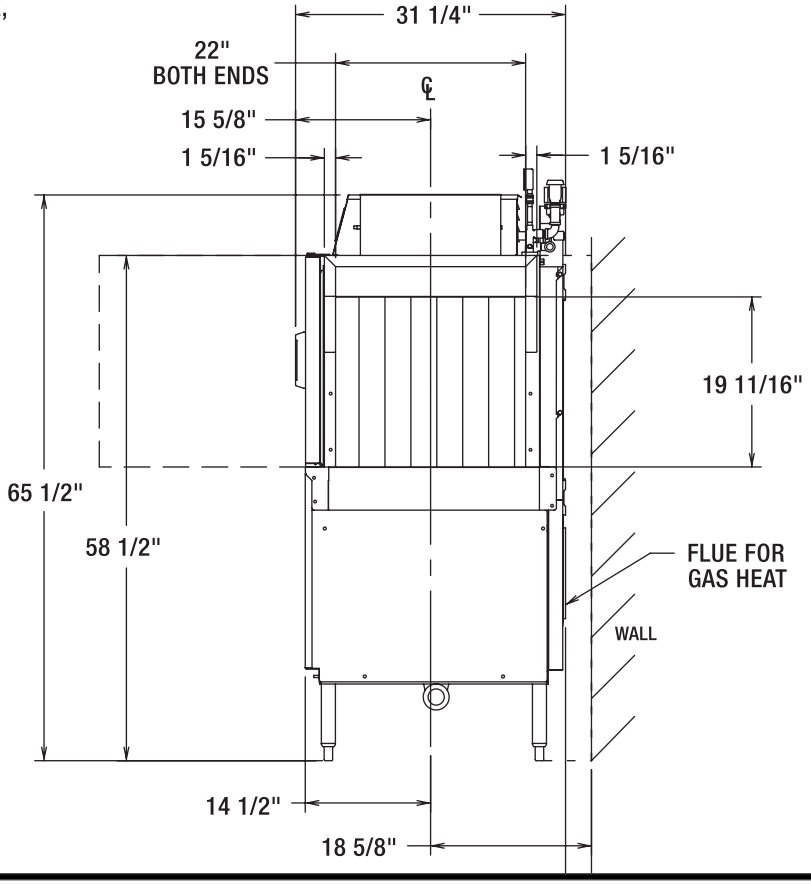

BOOSTER HEAT 15 KW			
ELEC. SPECS.	RATED AMPS	MINIMUM SUPPLY CIRCUIT CONDUCTOR AMPACITY	MAXIMUM PROTECTIVE DEVICE
200-240/50/3	40.1	50	50
380-415/50/3	26.6	30	30
200/50/3	43.3	60	60
208-240/60/3	40.1	50	50
208/60/3	45.0	60	60
240/60/3	40.1	50	50
380/60/3	21.3	30	30
380-415/60/3	23.2	30	30
480/60/3	20.0	25	25
600/60/3	13.5	20	20

BOOSTER HEAT 30 KW			
ELEC. SPECS.	RATED AMPS	MINIMUM SUPPLY CIRCUIT CONDUCTOR AMPACITY	MAXIMUM PROTECTIVE DEVICE
200-240/50/3	80.2	90	90
380-415/50/3	53.2	60	60
200/50/3	80.8	90	90
208-240/60/3	80.2	90	90
208/60/3	83.9	90	90
240/60/3	80.2	90	90
380/60/3	42.5	60	60
380-415/60/3	46.4	60	60
480/60/3	40.1	50	50
600/60/3	33.7	40	40

HOBART
701 S Ridge Avenue, Troy, OH 45374
1-888-4HOBART • www.hobartcorp.com

CL44*e* DISHWASHER

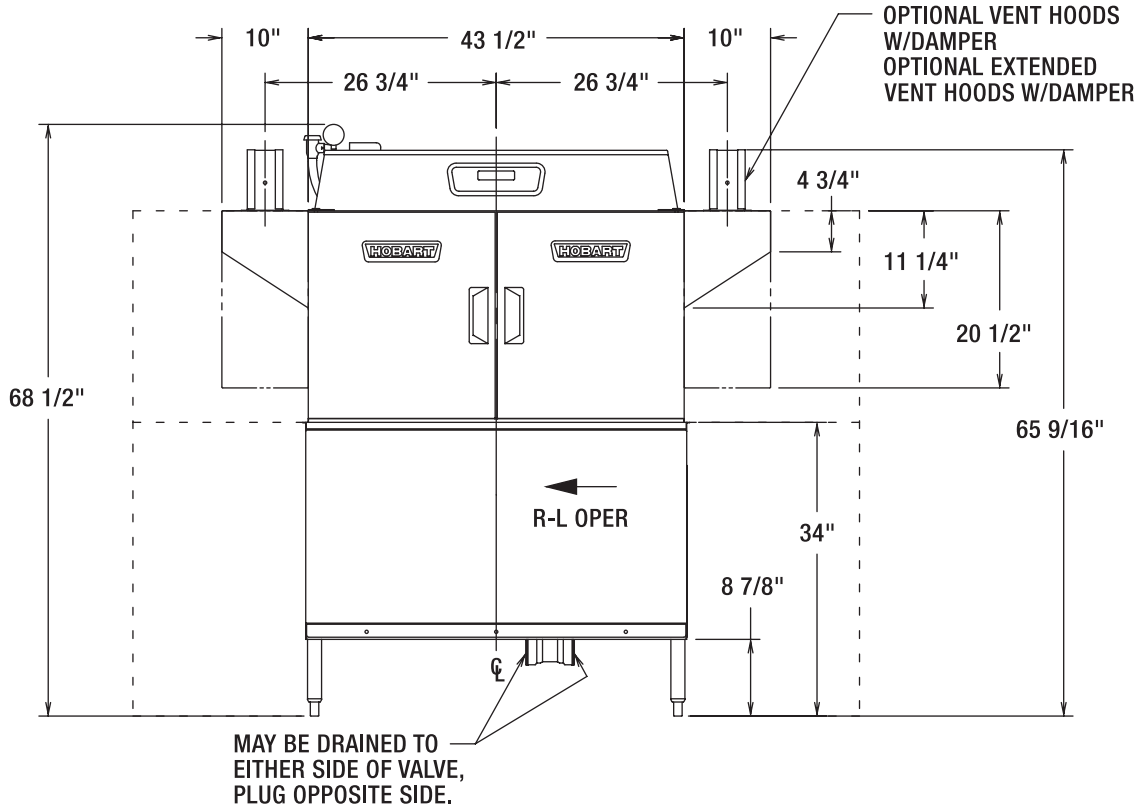

CAUTION: CERTAIN MATERIALS INCLUDING SILVER, ALUMINUM, AND PEWTER ARE ATTACKED BY SODIUM HYPOCHLORITE (LIQUID BLEACH).

ATTN: PLUMBING CONNECTIONS MUST COMPLY WITH APPLICABLE SANITARY, SAFETY, AND PLUMBING CODES.

⚠ WARNING

ELECTRICAL AND GROUNDING CONNECTIONS MUST COMPLY WITH THE APPLICABLE PORTIONS OF THE NATIONAL ELECTRICAL CODE AND/OR OTHER LOCAL ELECTRICAL CODES.

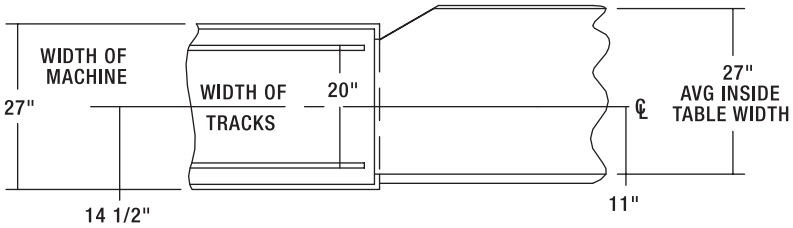

SUGGESTED TRACK AND TABLE LAYOUT

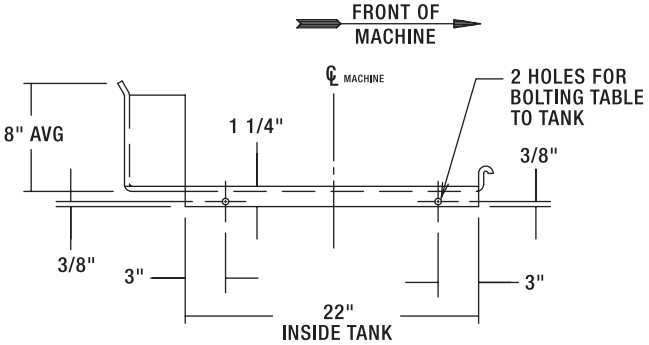

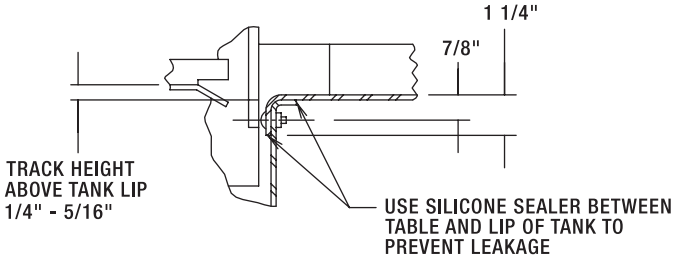

CL44*e*
ELECTRIC L-R

HOBART
701 S Ridge Avenue, Troy, OH 45374
1-888-4HOBART • www.hobartcorp.com

MODEL: CL44*e*
L-R OPERATION
D-936341
REV C

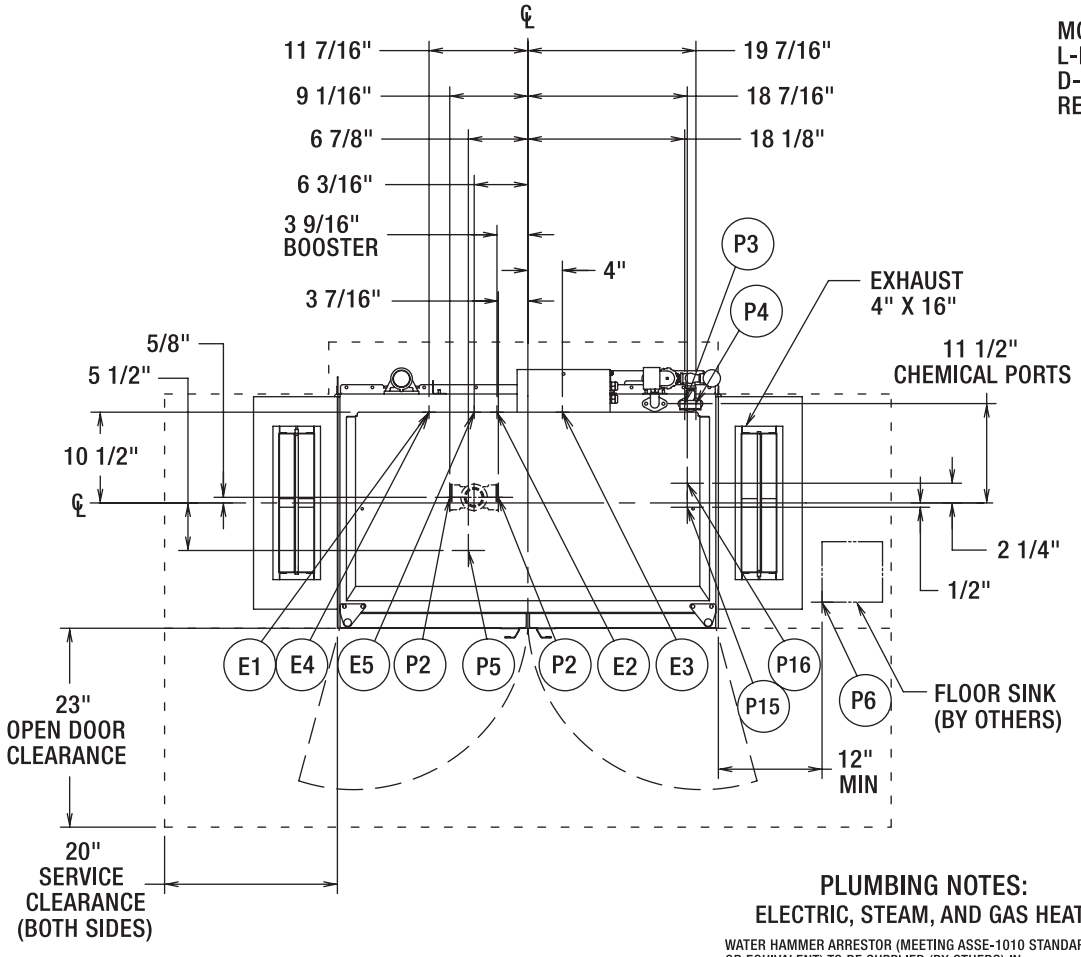

PLUMBING NOTES:
ELECTRIC, STEAM, AND GAS HEATS

WATER HAMMER ARRESTOR (MEETING ASSE-1010 STANDARD OR EQUIVALENT) TO BE SUPPLIED (BY OTHERS) IN COMMON WATER SUPPLY LINE AT SERVICE CONNECTION.

RECOMMENDED WATER HARDNESS TO BE 3 GRAINS OR LESS FOR BEST RESULTS.

FOR NON-BOOSTER MACHINE (P15 CONN):
RECOMMENDED BUILDING FLOWING WATER PRESSURE TO THE DISHWASHER IS 20 PSI, (15 PSI MIN - 25 PSI MAX).
IF PRESSURES HIGHER THAN 25 PSI ARE PRESENT, A PRESSURE REGULATING VALVE WITH INTERNAL THERMAL EXPANSION BY-PASS, MUST BE SUPPLIED (BY OTHERS) IN THE WATER LINE TO THE DISHWASHER.

FOR CONVENIENCE WHEN CLEANING, WATER TAP SHOULD BE INSTALLED NEAR MACHINE WITH HEAVY DUTY HOSE AND SQUEEZE VALVE.

WHEN USED, CHEMICAL SANITIZING FEEDER MUST BE CERTIFIED TO NSF STANDARD 29.

MISCELLANEOUS NOTES:

OPTIONAL VENT HOODS OR EXTENDED HOODS EXHAUST REQUIREMENTS: 200 CFM ENTRANCE END
400 CFM EXIT END.

ALL DIMENSIONS TAKEN FROM FLOOR LINE MAY BE INCREASED APPROXIMATELY 3/4" OR DECREASED 1/2".

44" INSIDE TANK (AT TABLE CONNECTION)
43-25/32" TABLE TO TABLE.

NET WEIGHT OF MACHINE: 501 LBS (STD HEIGHT),
DOMESTIC SHIPPING WEIGHT: 576 LBS (STD HEIGHT).

SEPARATE SERVICE CONNECTION FOR ELEC. HEAT

ELEC. HEAT 15 KW (WASH)			
VOLTAGE	RATED AMPS	MINIMUM SUPPLY CIRCUIT CONDUCTOR AMPACITY	MAXIMUM PROTECTIVE DEVICE
208/60/3	45	60	60
240/60/3	43	60	60
480/60/3	22	30	30
200/50/3	43	60	60
380/60/3	23	30	30
380-415/50/3	29	40	40
600/60/3	14.4	20	20
208/60/1	78	100	100

SEPARATE SERVICE CONNECTION FOR MOTORS ON ELEC. HEAT

MOTORS: 1/6 HP CONVEYOR 2 HP WASH			
VOLTAGE	RATED AMPS	MINIMUM SUPPLY CIRCUIT CONDUCTOR AMPACITY	MAXIMUM PROTECTIVE DEVICE
208/60/3	10	15	15
240/60/3	9.7	15	15
480/60/3	6.4	15	15
200/50/3	10.6	15	15
380/60/3	7.3	15	15
380-415/50/3	7	15	15
600/60/3	5.9	15	15
208/60/1	15.9	20	20

SINGLE POINT ELECTRICAL CONNECTION (3 PH ONLY) MOTORS AND ELECTRIC TANK HEAT

VOLTAGE	RATED AMPS	MINIMUM SUPPLY CIRCUIT CONDUCTOR AMPACITY	MAXIMUM PROTECTIVE DEVICE
208/60/3	55	70	70
240/60/3	52.6	70	70
480/60/3	27.9	40	40
200/50/3	53.9	70	70
380/60/3	30.1	40	40
380-415/50/3	31.8	40	40

HOBART
701 S Ridge Avenue, Troy, OH 45374
1-888-4HOBART • www.hobartcorp.com

CL44*e*
ELECTRIC R-L

MODEL: CL44*e*
R-L OPERATION
D-936340
REV D

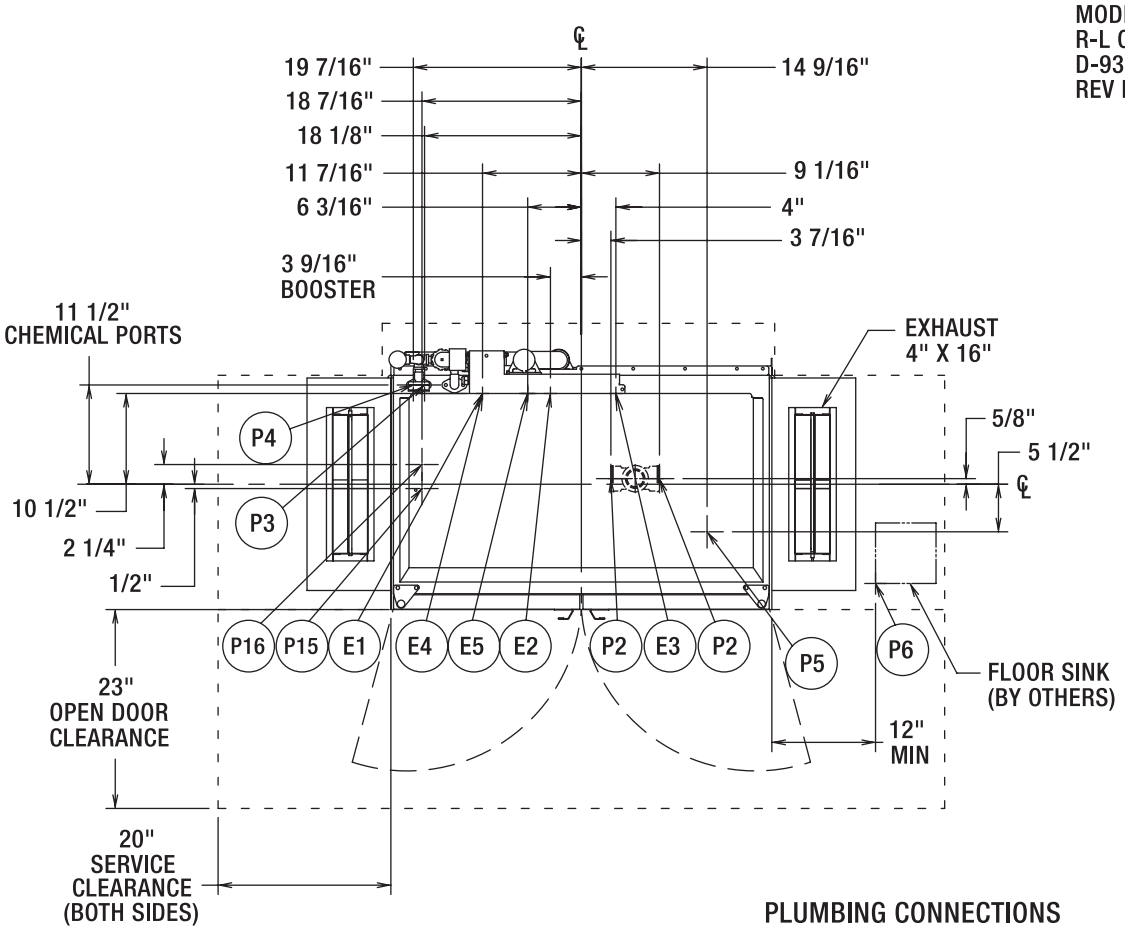

ELECTRICAL CONNECTIONS

CONNECTION INFORMATION
(AFF = ABOVE FINISHED FLOOR)

LEGEND

ELECTRIC, STEAM, AND GAS HEATS

E1 ELECTRIC CONNECTION: SINGLE POINT, ELEC, GAS, & STEAM, 1-1/4" CONDUIT HOLE OR 2" CONDUIT, 63-3/4" AFF

E2 ELECTRIC CONNECTION: BOOSTER. 15KW/30KW, 1-1/4" CONDUIT HOLE OR 2" CONDUIT HOLE, 63-3/4" AFF

E3 ELECTRIC CONNECTION: DETERGENT, SANITIZER (LOW TEMP ONLY) AND RINSE FEEDERS. 1/2" CONDUIT. 64-1/4" AFF

ELECTRIC HEAT ONLY

SINGLE PHASE OR FIELD CONFIGURED
3 PHASE SEPARATE ELECTRIC CONNECTION

E4 ELECTRIC CONNECTION: MOTORS AND CONTROLS 1-1/4" CONDUIT. 63-3/4" AFF.

E5 ELECTRIC HEAT: 15,000 WATTS, WASH TANK. 1" CONDUIT HOLE, 63-3/4" AFF.

PLUMBING CONNECTIONS

CONNECTION INFORMATION
(AFF = ABOVE FINISHED FLOOR)

LEGEND

ELECTRIC, STEAM, AND GAS HEATS

P2 DRAIN: 2" FPT, 7-3/8" AFF TWO POSSIBLE CONNECTIONS; MAY BE DRAINED TO EITHER SIDE OF VALVE, PLUG OPPOSITE SIDE.

P3 SANITIZER FEEDER: REMOVE 1/8" NPT PIPE PLUG TO ACCESS TAPPED HOLE. 1/8" NPT 59-1/2" AFF (LOW TEMP ONLY)

P4 RINSE FEEDER: REMOVE 1/8" NPT PIPE PLUG TO ACCESS TAPPED HOLE. 1/8" NPT 59-9/16" AFF.

P5 DETERGENT PROBE SENSOR: REMOVE CAP AND STUD ASSEMBLY TO ACCESS 7/8" DIA HOLE (WASH TANK ONLY). 14-5/8" AFF.

P6 INDIRECT DRAIN-FLOOR SINK: BY OTHERS, 0"AFF. WHEN REQUIRED, INSTALL FLOOR SINK OUTSIDE THE PERIMETER OF THE DISHWASHER.

P15 COMMON WATER CONNECTION: 1/2" FPT, 11-3/16" AFF.
HIGH TEMP. W/O BOOSTER 180°F MIN. 194°F MAX.
LOW TEMP. 120°F MIN.

P16 COMMON WATER CONNECTION: 1/2" FPT, 11-3/16" AFF
HIGH TEMP. W/15K BOOSTER 140°F MIN.
HIGH TEMP. W/30K BOOSTER 110°F MIN.

P17 1/2" COLD WATER LINE NEAR THE DRAIN DISCHARGE IF THE OPTIONAL DRAIN WATER TEMPERING KIT IS INCLUDED

CL44*e* DISHWASHER

HOBART
701 S Ridge Avenue, Troy, OH 45374
1-888-4HOBART • www.hobartcorp.com

SPECIFICATIONS: Meets requirements of A.S.S.E. Standard No. 1004.

DESIGN: Semi automatic, high or low temperature single-tank, rack-type dishwasher with flexible thermal layer curtains at the ends of chamber and between wash and final rinse zones. Insulated hinged inspection doors located in front of machine provide easy access to wash arms, rinse arms, strainer, strainer basket, and pump intake screen. Length of machine inside tank (at table connection) 44". Machine designed to clean and sanitize with hot water 160°F wash and 180°F (minimum) final rinse, or low temperature 130°F wash and 120°F final rinse and a chemical sanitizer. Water hardness recommended to be 3 gr. for best results. Automatic interlocks shut off pump and conveyor if door is opened when machine is in operation.

CONSTRUCTION: Tank, chamber, frame, legs, control box, doors, and all panels are constructed of stainless steel.

PUMP: The 165 gpm recirculating stainless steel pump and impeller with a ceramic seat seal. Easily accessible pump assembly permits quick inspection. The pump is self-draining. All piping distributing water to the upper and lower wash arms is stainless steel tubing.

PUMP MOTOR: Built for Hobart 2 hp grease-packed ball bearings, splash proof, ventilated with manual, resettable inherent overload protection. Available in electrical specifications of 208-240/60/1, 208-240/60/3, 480/60/3 and 600/60/3. Also available, but not submitted for UL listing are 200-240/50/3 and 380-415/50/3.

CONTROLS: A stainless steel control module with power and “start/stop” buttons is mounted on top of the machine. Machine control circuitry will be operated from a 120-volt control circuit transformer. Electrical components are completely wired with 105°C, 600V thermoplastic insulated wire with stranded conductors routed through UL listed electrical conduit or covered wire way.

CONVEYOR: Rapid Return drive, designed for more even throughput of racks and allows for a 16-inch separation between the wash and the rinse zone. Racks conveyed automatically through wash and rinse zones and onto clean dish table. Ball Detent Clutch drive prevents damage to machine or racks, should movement of racks be obstructed. Rack tracks, conveyor structure, and drive units of stainless steel for 19¾" x 19¾" racks as standard. Conveyor speed: 5.6 FPM.

DRIVE MOTOR: Built for Hobart, ⅙ horsepower gear motor, ventilated with manual, resettable inherent overload protection. Available in electrical specifications of 208-240/60/1, 208-240/60/3, 480/60/3 and 600/60/3. Also available, but not submitted for UL Listing are 200-240/50/3 and 380-415/50/3.

POWER WASH: Wash tank is equipped with upper and lower stainless steel CFD Wash Arms which effectively direct water jets to all ware surfaces. Both upper and lower wash arms are self-aligning and have easily removable end caps for cleaning without use of tools. A removable perforated stainless steel strainer pan supports a deep perforated stainless steel basket.

FINAL RINSE: Final rinse flow rate: 2.1 gpm, .62 gpr, 126-gph. Stainless steel upper and lower Auto Position Rinse Arms™ have single rows of nozzles. Racks entering the rinse zone automatically trigger rinse. Final rinse water line is equipped with a vacuum breaker downstream of an electrically operated solenoid valve in common piping system. Rinse agent and Low Temp Final Rinse – Sanitizer agent (5.25% sodium hypochlorite – bleach) dispenser injection ports provided in final rinse piping above chamber. **Caution:** Certain materials, including silver, aluminum, and pewter are attacked by sodium hypochlorite (bleach) in the chemical sanitizing dishwasher mode of operation.

FILL: Fill water line is equipped with vacuum breaker on downstream side of electrically operated solenoid valve in common piping system, for automatic maintenance of tank level.

DRAIN AND OVERFLOW: Large bell-type automatic overflow and drain valve controlled from inside of machine. Drain automatically seats by closing inspection doors. Drain seal is large diameter, high temperature o-ring. Drain housing can be plumbed from load or unload end of machine.

STANDARD EQUIPMENT: Digital display of wash and final rinse temperature. Positive low water protection for tank heat. Thermal Layered Curtains throughout machine are keyed to ensure proper placement. Drain is automatically closed when inspection doors are closed. Stainless steel adjustable feet. Bolted stainless steel enclosure panels around perimeter and underneath machine. Automatic tank fill. Door interlock. Auto-timer. Vent fan and booster heater controls. Single point electrical connection. Low temperature alerts. Service diagnostics. Dirty water indicator. Delime notification. Conveyor dwell. Energy Saver Mode. NAFEM Data Protocol compliant.

WASH TANK HEATING SELECTIONS (must choose one):

ELECTRIC: One electric Incoloy® sheathed immersion heater (15 KW) removable from inside tank. Tank water temperature is controlled by microprocessor controlled thermostat with positive low-water protection and magnetic contactor. (Disconnect switches not furnished.) A high limit device mounted on the surface of the tank additionally protects heating element.

STEAM: One-inch stainless steel steam coil. Tank water temperature controlled by microprocessor controlled thermostat with positive low-water protection. Steam supplied to machine through high temperature steam solenoid valve and line strainer.

GAS: Regulated infrared immersion tube gas burner system. Microprocessor controlled thermostat and a blower with a pressure switch control tank water temperature. Positive low water protection is provided. A high limit device mounted on the surface of the tube additionally protects immersion tube. A solid-state igniter board controls the gas valve and provides flame ignition. A transformer steps the control circuit voltage down from 120 volts to 24 volts to power the igniter board and gas valve. For natural gas, gas pressure to burner (customer connection) not to exceed 7" W.C. For LP gas, gas pressure to burner (customer connection) not to exceed 11" W.C. If gas pressure is higher than 7" W.C. natural or 11" W.C. LP pressure regulating valve must be supplied (by others) in the gas line to the dishwasher.

OPTIONAL EQUIPMENT AT EXTRA COST:

Stainless steel pressureless booster heater. Stainless steel vent hoods with vent stack and locking-type damper. Higher than standard chamber. Side loaders and unloaders. Floor mounted steam booster. 19¾" x 19¾" peg, combination and miscellaneous racks. Table limit switch. Drain water tempering kit.

ITEM 60

CUSTOM FABRICATED FOODSERVICE EQUIPMENT

DESCRIPTION: **Vent Ducts**

NO CUT SHEET AVAILABLE

CONSTRUCTION FEATURES:

Make - Fabricate per General Construction this Section
Size - 4" x 16" with length as necessary to reach 3" above finished ceiling
Construction - 18 gauge stainless steel welded exhaust ducts, sized to suit the vent stacks. Ducts shall be provided with a one-piece perimeter angle collar at the ceiling, installed "leg up".

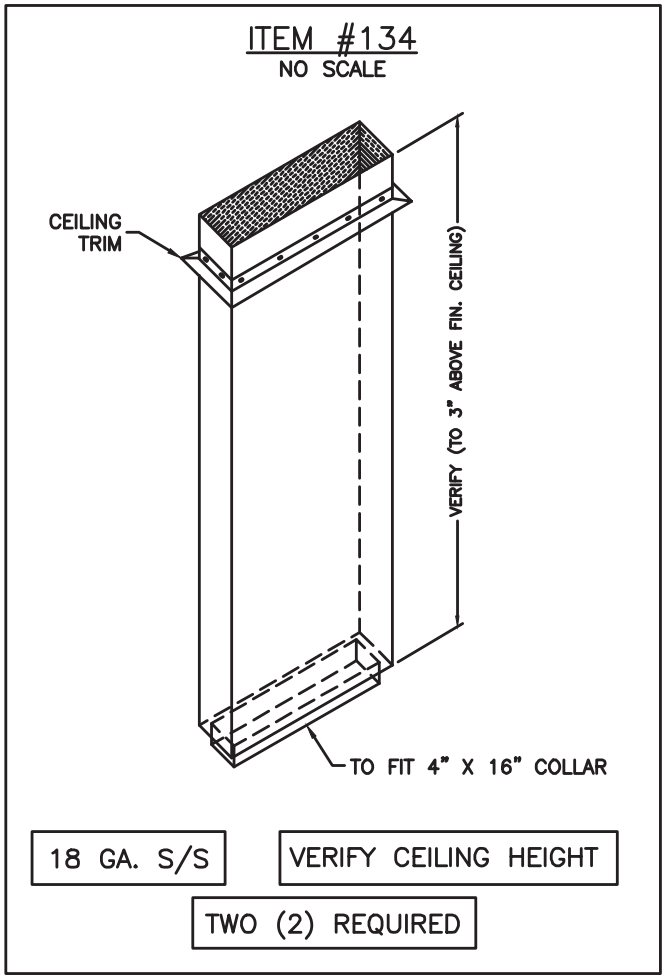

ITEM 61

CUSTOM FABRICATED FOODSERVICE EQUIPMENT

DESCRIPTION: Clean Dish Table

NO CUT SHEET AVAILABLE

CONSTRUCTION FEATURES:

Make - Fabricate per General Construction this Section
Size - 84" x 27" x 34" high plus 10" splash at rear; 3" high raised roll at front and end
Construction - 14 gauge stainless steel top and splash over channel frame with raised roll front and end, tall splash at rear, turned down into dishwasher and secured with stainless steel machine screws, and mounted on four legs with gussets, adjustable feet and undershelf. Secure table 3" off face of wall.

Item # _____
Quantity _____

Stainless Steel Utility Carts

Heavy Duty - 700 Lb Capacity

Spec. # _____

AIA # _____

Model 744

Angled "U" shaped steel frame provides the strength needed for heavy duty jobs.

- Rugged 18 gauge reinforced stainless steel shelves are stain and rust resistant. Electronically welded for added strength.
- Easy to clean and sanitize, simply wipe down or steam clean.
- Leg and handle bumpers protect walls and furniture.
- NSF listed models available.
- 700 lb. (300 kg) capacity is ideal for-continuous moving of heavy loads over various standard floor surfaces.

NSF®

LAKESIDE®
Lakeside Manufacturing, Inc.
4900 West Electric Avenue • West Milwaukee, WI 53219 U.S.A.
800-558-8565 • 414-902-6400 • Fax 414-902-6446 • www.eLakeside.com

Crabtree McGrath Associates, Inc.

Fuller Middle School
Framingham, MA

Item #: 4
Quantity: 2

Stainless Steel Utility Carts

Heavy Duty - 700 Lb Capacity

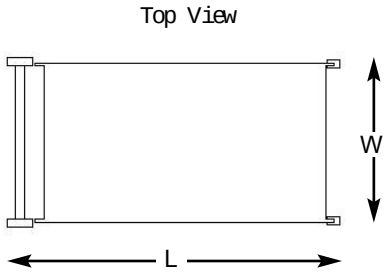

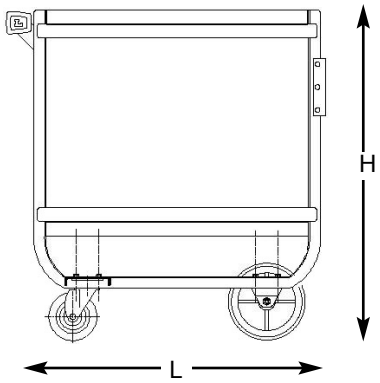

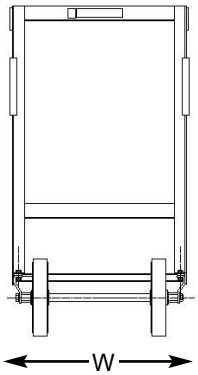

AutoCAD drawings available through KCL CADalog

Dimensions

Model	NSF Listed Model	Shelf Description			Overall Size			Case Weight	
		# of	Size	Clearance	L	W	H	lbs.	(kg.)
710	510	2	15-1/2" x 24" (394 x 610)	19" (483)	30" (762)	16-1/4" (413)	34-1/4" (870)	49	(22.2)
711	511	3	15-1/2" x 24" (394 x 610)	10" (254)	30" (762)	16-1/4" (413)	34-1/4" (870)	57	(25.9)
721	521	2	18" x 27" (457 x 686)	19" (483)	32-5/8" (829)	19-3/8" (492)	34-1/2" (876)	53	(24)
722	522	3	18" x 27" (457 x 686)	10" (254)	32-5/8" (829)	19-3/8" (492)	34-1/2" (876)	63	(28.6)
743	543	2	21" x 33" (533 x 838)	21" (533)	38-5/8" (981)	22-3/8" (568)	37-1/8" (943)	64	(29)
744	544	3	21" x 33" (533 x 838)	11-3/8" (289)	38-5/8" (981)	22-3/8" (568)	37-1/8" (943)	78	(35.4)
758	558	2	21" x 49" (533 x 1245)	21" (533)	54-5/8" (1387)	22-3/8" (568)	37" (940)	87	(39.5)
759	559	3	21" x 49" (533 x 1245)	11-3/8" (289)	54-5/8" (1387)	22-3/8" (568)	37" (940)	108	(49)

Measurements in ( ) denote metric millimeters, unless otherwise specified.

AIA # _____

Spec. # _____

Specifications

Unit shall be of fully welded stainless steel construction. Legs and frame shall be of U-frame design, eliminating the need for corner reinforcements. Leg/frame shall be .120 x 1" x 1" angle stainless steel. Shelves shall be of 18-gauge stainless steel and shall be welded to vertical leg frames. Shelves shall be double hemmed on all four edges for extra rigidity. Unit shall have two each 5" (127 mm) diameter extra-load swivel casters with 1-1/4" (32 mm) wide non-marking polyurethane wheels, and two each 8" diameter extra-load wheels mounted to a fixed axle. Swivel casters shall be plate type and shall be bolted to an 18-gauge 5" (127 mm) wide stainless steel cross member with a galvanized reinforcement. Unit shall have push handle made of 18 gauge 1" O.D. stainless steel tubing. Handle mounting brackets shall be welded to vertical leg frame. Unit shall have two each bumpers mounted to handle ends and two each 6" (152 mm) vertical bumpers riveted to front legs.

Optional Accessories

- Extended perimeter bumper
- All 5" swivel casters
- Set of 2 each 5" brake casters

LAKESIDE® Lakeside Manufacturing, Inc.

Crabtree McGrath Associates, Inc.

Fuller Middle School
Framingham, MA

Item #: 4
Quantity: 2

InterMetro Industries Corporation
North Washington Street
Wilkes-Barre, PA 18705
www.metro.com

Four tier with 63" high posts on casters

METROMAX Q™ SHELVING

with *Microban Antimicrobial Product Protection

Part of the innovative MetroMax iQ™ Storage System, MetroMax Q™ is a longer life storage solution than conventional wire shelving. The product offers durable polymer mats that remove for easy cleaning and protect stored items from damage. Quick adjust shelves and MetroMax iQ accessories provides a very efficient use of storage space. MetroMax Q™ is integrated with online space planning tools and tutorials. **www.metro.com/iQ**

- **Longer-life performance:** Durable, corrosion proof polymer mats protect the shelves from normal wear and tear. Robust epoxy coated steel frames and posts hold as much weight as Metro's wire shelving. Weight capacity for evenly distributed loads:
  800 lbs. (363kg) per shelf for lengths of 24" to 48" (610 to 1220mm)
  600 lbs. (275kg) per shelf for lengths of 54" (1370mm) or longer
  2,000 lbs. (907kg) maximum per stationary unit.
- **Interchangeable:** MetroMax Q and MetroMax i™ shelves, posts, and most accessories are compatible on the same unit. Use MetroMax Q shelves with MetroMax i™ polymer posts for increased corrosion protection. Use MetroMax i™ solid shelves when spill containment is required or as a bottom shelf to protect supplies from dirt or backsplashes from mops.
- **Easier to clean and maintain:** Polymer mats can be easily removed and cleaned in a sink or dish machine. Microban antimicrobial product protection is built into the high contact areas of the shelf including the mats, frames, and posts to protect the product from bacteria, mold, mildew, and fungus that cause odors and product degradation. Microban protection keeps the product "cleaner between cleanings".
- **Quick to Adjust:** Patented corner release allows shelves to be unlocked without tools. Simply flip each corner release, relocate the wedge connectors on the posts, and reposition the shelf. Quickly adjust shelves to reclaim wasted vertical space.
- **Smooth, Protective Surfaces:** Smooth shelf mats protect packaged items from unwanted rips, tears, or damage.
- **Open Grid and Solid Mat Options:** MetroMax Q is available with open grid mats as standard. Open grid shelves promote air circulation and light penetration.
  MetroMax i™ solid shelves can be used with MetroMax Q grid shelves on the same unit and are available in 18" and 24" (457 and 610mm) depths. For 21" (530mm) deep MetroMax Q, solid mat overlays are available.
- **Efficient, Organized Storage:** Premium MetroMax iQ™ accessories efficiently organize, contain, and compartmentalize ***all*** space between shelves.
- **Quick to Assemble:** MetroMax Q assembles easily in minutes, without tools. Shelves can be adjusted at 1" (25mm) increments along the post. Shelf wedges have a window to locate your desired position.

MetroMax Q Mobile Unit

NSF

MetroMax Q with Accessories and MetoMax i Solid Bottom Shelf

*MICROBAN® and the MICROBAN® symbol are registered trademarks of the Microban Products Company, Huntersville, NC.

Crabtree McGrath Associates, Inc.

Fuller Middle School
Framingham, MA

Item #: 63
Quantity: 3

Specifications

- **Shelf frames and posts:** Steel with electroplated substrate and highly durable, abrasion-resistant epoxy finish. Epoxy finish has built-in Microban antimicrobial product protection. The adjustable foot is reinforced nylon.
- **Shelf Mats:** Injection molded polypropylene with exclusive built-in Microban® antimicrobial product protection.
- **Shelf Wedge Connector:** Reinforced nylon.
- **Temperature range:** -20°F (-29°C) to 125°F (52°C) continuous use, with intermittent exposure to 200°F (93°C) for cleaning.

Standard Interchangeable Shelves

- Part number includes shelf with removable mats and one bag of wedges.
- MetroMax Q grid shelves, MetroMax i™ grid and solid shelves are all compatible on the same unit.

Nominal Width (in.)	(mm)	Nominal Length (in.)	(mm)	MetroMax Q Shelf with Grid Mat Model No.	Approx. Pkd. Wt. (lbs.)	(kg)	MetroMax i™ Shelf with Solid Mat Model No.	Approx. Pkd. Wt. (lbs.)	(kg)
18	457	24	610	MQ1824G	6.2	2.8	MX1824F	12.7	5.8
18	457	30	760	MQ1830G	8.0	3.6	MX1830F	14.5	6.6
18	457	36	914	MQ1836G	9.7	4.4	MX1836F	17.2	7.8
18	457	42	1060	MQ1842G	11.4	5.2	MX1842F	20.1	9.1
18	457	48	1220	MQ1848G	13.2	6.0	MX1848F	23.1	10.5
18	457	54	1372	MQ1854G	15.0	6.8	MX1854F	21.5	9.7
18	457	60	1524	MQ1860G	16.7	7.6	MX1860F	23.2	10.5
18	457	72	1829	MQ1872G	20.0	9.1	MX1872F	27.5	12.5
21	530	24	610	MQ2124G	8.0	3.6	—		
21	530	30	760	MQ2130G	9.7	4.4	—		
21	530	36	914	MQ2136G	11.4	5.2	—		
21	530	42	1060	MQ2142G	12.8	5.8	—		
21	530	48	1220	MQ2148G	14.5	6.6	—		
21	530	54	1372	MQ2154G	16.7	7.6	—		
21	530	60	1524	MQ2160G	18.5	8.4	—		
21	530	72	1829	MQ2172G	21.7	9.9	—		
24	610	24	610	MQ2424G	9.7	4.4	MX2424F	14.2	6.4
24	610	30	760	MQ2430G	11.4	5.2	MX2430F	15.9	7.2
24	610	36	914	MQ2436G	13.1	6.0	MX2436F	19.6	8.9
24	610	42	1060	MQ2442G	14.1	6.4	MX2442F	21.5	9.8
24	610	48	1220	MQ2448G	15.8	7.1	MX2448F	25.3	11.5
24	610	54	1372	MQ2454G	18.5	8.4	MX2454F	25.0	11.3
24	610	60	1524	MQ2460G	20.3	9.2	MX2460F	26.8	12.1
24	610	72	1829	MQ2472G	23.5	10.7	MX2472F	31.0	14.1

Actual Dimensions:
Width: Add 3/8" (10mm) to nominal size.
Length: Subtract 3/16" (5mm) from nominal size.

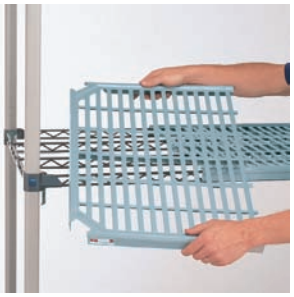

MetroMax Q Open Grid Shelf

MetroMax i™ Solid Shelf

Heavy-Duty Dunnage Shelves

- Corrosion proof MetroMax i™ dunnage shelf is compatible with MetroMax Q.
- Open grid and solid version available.
- Weight capacity per shelf evenly distributed: 1,200 lbs. (544kg) on shelves up to and including 48" (1220mm) long; 900 lbs. (408kg) for shelves 60" (1524mm) long.
- Dunnage shelves are recommended for use on units with four posts.

Nominal Width (in.)	(mm)	Nominal Length (in.)	(mm)	Shelf with Grid Mat Model No.	Approx. Pkd. Wt. (lbs.)	(kg)	Shelf with Solid Mat Model No.	Approx. Pkd. Wt. (lbs.)	(kg)
18	457	36	914	MHP1836G	18	8.2	MHP1836F	22	10.0
18	457	48	1220	MHP1848G	22	10.0	MHP1848F	26	11.8
18	457	60	1524	MHP1860G	26	11.8	MHP1860F	30	13.6

Solid Mat Overlays

- Overlays snap onto the open grid mats to create a solid surface.
- Available for 21" (530mm) deep MetroMax Q shelves.

Fits Shelf (in.)	(mm)	Model No.	Approx. Pkd. Wt. (lbs.)	(kg)
21x24	530x610	Q2124SM	0.35	0.16
21x30	530x760	Q2130SM	0.45	0.20
21x36	530x914	Q2136SM	0.50	0.23
21x42	530x1060	Q2142SM	0.60	0.27
21x48	530x1220	Q2148SM	0.70	0.32
21x54	530x1372	Q2154SM	0.80	0.36
21x60	530x1524	Q2160SM	0.90	0.41
21x72	530x1829	Q2172SM	1.00	0.45

METROMAX Q™
POLYMER AND STEEL SHELVING

Standard Interchangeable Posts

- MetroMax Q: Epoxy coated steel with Microban antimicrobial product protection.
- MetroMax i: Polymer with Microban antimicrobial product protection.
- Stationary posts include an adjustable leveling foot to compensate for uneven floors. Leveling foot can be adjusted 1" (25mm).
- When mounting a shelving unit to a dolly base, stationary posts are used.
- Special height cut posts are available. Consult your Metro representative.

MetroMax Q Steel Post

MetroMax i Polymer Post

STATIONARY POST WITH LEVELING FOOT

Nominal Height (in.)	Nominal Height (mm)	Actual Height* (in.)	Actual Height* (mm)	MetroMax Q Steel Model No.	Approx. Pkd. Wt. (lbs.)	Approx. Pkd. Wt. (kg)	MetroMax i Polymer Model No.	Approx. Pkd. Wt. (lbs.)	Approx. Pkd. Wt. (kg)
13	370	14 3/4	375	MQ13PE	1.0	0.5	MX13P	0.5	0.2
27	685	28 3/4	730	MQ27PE	2.0	0.9	MX27P	0.9	0.4
33	875	34 3/4	883	MQ33PE	2.5	1.1	MX33P	1.0	0.5
54	1370	54 3/4	1391	MQ54PE	4.0	1.8	MX54P	1.6	0.7
63	1585	62 3/4	1594	MQ63PE	4.5	2.0	MX63P	1.8	0.8
74	1690	74 3/4	1899	MQ74PE	5.5	2.5	MX74P	2.2	1.0
86	2195	86 3/4	2203	MQ86PE	6.5	2.9	MX86P	2.5	1.1

POST FOR STEM CASTER

Nominal Height (in.)	Nominal Height (mm)	Actual Height* (in.)	Actual Height* (mm)	MetroMax Q Steel Model No.	Approx. Pkd. Wt. (lbs.)	Approx. Pkd. Wt. (kg)	MetroMax i Polymer Model No.	Approx. Pkd. Wt. (lbs.)	Approx. Pkd. Wt. (kg)
13	370	13 3/4	349	MQ13UPE	1.0	0.5	MX13UP	0.5	0.2
27	685	27 3/4	705	MQ27UPE	2.0	0.9	MX27UP	0.9	0.4
33	875	33 3/4	857	MQ33UPE	2.5	1.1	MX33UP	1.0	0.5
54	1370	53 3/4	1365	MQ54UPE	4.0	1.8	MX54UP	1.6	0.7
63	1585	61 3/4	1568	MQ63UPE	4.5	2.0	MX63UP	1.8	0.8
70	1778	69 3/4	1765	MQ70UPE	5.0	2.3			
74	1690	73 3/4	1873	MQ74UPE	5.5	2.5	MX74UP	2.3	1.0
86	2195	85 3/4	2178	MQ86UPE	6.5	2.9	MX86UP	2.5	1.4

Replacement Leveling Foot:
Model No. RPM3-FOOT

Replacement Post Cap for Steel Post:
Model No. RPMQS-POSTCAP

Replacement Post Cap for Polymer Post:
Model No. RPMXS-POSTCAP

Replacement MetroMax Q Wedges
Model No. MQ9985 Bag of 4

Replacement MetroMax Q Wedges MQ9985

NOTE: Compatibility with existing Metro polymer mat shelving systems
- MQ9985 wedges are compatible with original MetroMax Q shelves and posts.
- The post centers on MetroMax Q have been changed to allow interchangeability with MetroMax i™ shelves. MetroMax Q shelves manufactured within or after April 2009 are not compatible with Q shelves made prior to April 2009.
- MetroMax Q is not compatible with original MetroMax manufactured prior to April 2009.
- Posts listed in above table (ex. MQ74PE, MX74PE) can be used with original MetroMax Q shelves made prior to April 2009.

Post Clamp

Adds stability by joining posts of two separate units together. With it, each unit is supported by four posts and buttressed by the adjacent unit.
Model No. 9994X

Foot Plate

Use to add stability to the shelving unit or to bolt units to the floor.
Model No. Zinc 9993Z
Model No. Stainless Steel 9993S

Stem Casters

A variety of stem casters are offered for MetroMax i™ mobile applications.
Stem caster models include bumpers.

Replacement Bumper M9992DBX

Crabtree McGrath Associates, Inc.

Fuller Middle School
Framingham, MA

Item #: 63
Quantity: 3

TRIPLE COMPARTMENT SINK

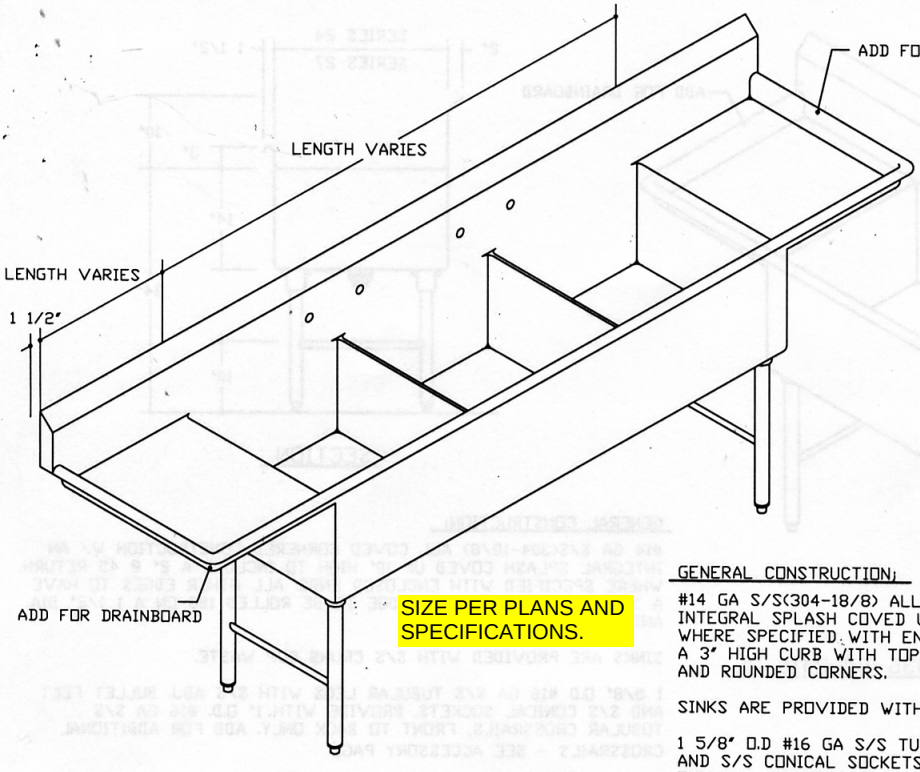

SIZE PER PLANS AND SPECIFICATIONS.

S-3-2454-DB-2418-RL

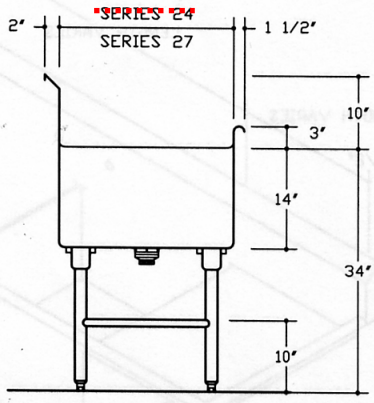

SECTION

GENERAL CONSTRUCTION;

#14 GA S/S(304-18/8) ALL COVED CORNERED CONSTRUCTION W/ AN INTEGRAL SPLASH COVED UP 10" HIGH TO INCLUDE A 2" @ 45 RETURN, WHERE SPECIFIED WITH ENCLOSED ENDS. ALL OTHER EDGES TO HAVE A 3" HIGH CURB WITH TOP EDGE TO BE ROLLED 180 ON A 1 1/2" DIA. AND ROUNDED CORNERS.

SINKS ARE PROVIDED WITH S/S CRUMB CUP WASTE.

1 5/8" O.D #16 GA S/S TUBULAR LEGS WITH S/S ADJ. BULLET FEET AND S/S CONICAL SOCKETS. PROVIDE WITH 1" O.D. #16 GA S/S TUBULAR CROSSRAILS, FRONT TO BACK ONLY. ADD FOR ADDITIONAL CROSSRAILS - SEE ACCESSORY PAGE

SERIES 24 - SINKS ONLY (ADD FOR DRAINBOARDS)		
MODEL #	LENGTH	WEIGHT
S-3-2418	54	150
S-3-2424	72	160
S-3-2427	81	170
S-3-2430	90	180

SERIES 27 - SINKS ONLY (ADD FOR DRAINBOARDS)		
MODEL #	LENGTH	WEIGHT
S-3-2718	54	160
S-3-2724	72	170
S-3-2727	81	180
S-3-2730	90	190

NOTE;

ON DRAINBOARDS OVER 30" LONG, ADD FOR ADDITIONAL SET OF LEGS AND CROSSRAILS, FRONT TO BACK

ALL DRAINBOARDS SHALL BE WELDED INTEGRAL WITH SINK SPECIFIED ABOVE

FOR DRAINBOARD SPECIFY LEFT, RIGHT, OR BOTH END ATTACHMENT

SERIES 24 - DRAINBOARDS		
MODEL #	LENGTH	WEIGHT
DB-2418	18	26
DB-2424	24	34

SERIES 27 - DRAINBOARDS		
MODEL #	LENGTH	WEIGHT
DB-2718	18	28
DB-2724	24	36

Crabtree McGrath Associates, Inc.

Fuller Middle School
Framingham, MA

Item #: 64
Quantity: 1

FOR ADDITIONAL LENGTH DRAINBOARDS OTHER THAN SCHEDULED OPTIONAL

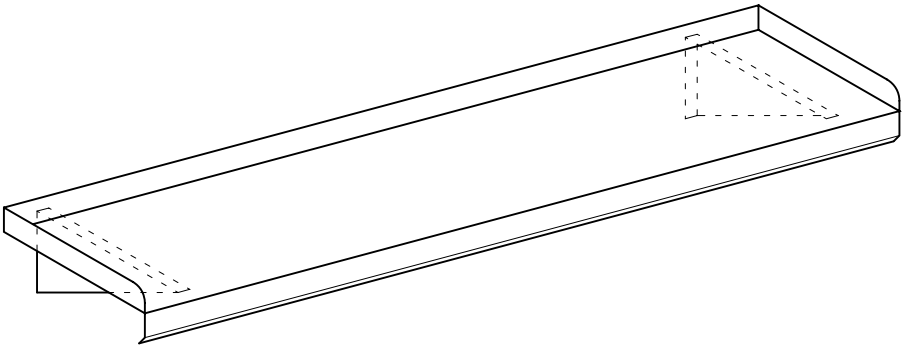

CUSTOM FABRICATED FOODSERVICE EQUIPMENT

DESCRIPTION: **Wall shelf**

36" x 10" mounted 54" and 66" above finished floor

NO CUT SHEET AVAILABLE

CONSTRUCTION FEATURES:

16 gauge stainless steel shelf
Rear and ends turned up 1-1/2" and corners welded
Front turned down 1-1/2" and in 1/2" at 45°
Mount on three 14 gauge stainless steel flag brackets with suitable anchors

DO NOT REMOVE
THIS PAGE INTENTIONALLY LEFT BLANK

APPENDIX D

SOIL MANAGEMENT PLAN

DO NOT REMOVE
THIS PAGE INTENTIONALLY LEFT BLANK

SOIL MANAGEMENT PLAN

FULLER MIDDLE SCHOOL

FRAMINGHAM, MASSACHUSETTS

DECEMBER 18, 2018

Prepared For:

Jonathan Levi Architects
266 Beacon Street
Boston, MA 02116

2269 Massachusetts Avenue
Cambridge, MA 02140
www.mcphailgeo.com
(617) 868-1420

PROJECT NO. 6473.9.00

December 18, 2018

Jonathan Levi Architects
266 Beacon Street
Boston, MA 02116

Attention: Mr. Philip Gray

Reference: Fuller Middle School; Framingham, Massachusetts
Soil Management Plan

Ladies and Gentlemen:

This letter presents the results of chemical analysis performed on representative soil samples obtained from the site of a proposed redevelopment of the Fuller Middle School located in Framingham, Massachusetts (the "project site"). Refer to the Project Location Plan, **Figure 1**, for the general site location.

These services were performed and this letter report was prepared in accordance with our proposal dated May 25, 2018, and the subsequent authorization of Jonathan Levi Architects. These services are subject to the limitations in **Appendix A**.

Subsurface explorations consisting of borings were recently performed to obtain samples of the fill material to submit for chemical testing to characterize the fill material for off-site re-use. Approximate plan locations of the borings are indicated on the enclosed Subsurface Exploration Plan, **Figure 2**.

In summary, this Soil Management Plan (SMP) provides recommendations for the off-site re-use of the following estimated quantities of fill material that may be excavated during construction of the proposed redevelopment of the Fuller Middle School. A color-coded classification of the removal recommendations for fill material within the footprint of the proposed redevelopment is provided on the enclosed Soil Management Plan, **Figure 3**.

SUMMARY TABLE OF CHARACTERIZED VOLUMES OF MATERIAL/CATERGORIES FOR OFF-SITE RE-USE

SOIL CLASSIFICATION	FILL (cu./yds.)
UNREGULATED	2,000
LESS THAN RCS-1*	1,500
UNLINED LANDFILL	500
TOTALS	4,000

*The scope of laboratory analysis was based upon the requirements of DEP Policy #Comm-97-001 Re-use and Disposal of Contaminated Soil at Massachusetts Landfills. Further soil sampling and analyses for additional compounds may be necessary to meet specific receiving facility requirements.

Existing Conditions

The project site fronts onto Flagg Drive to the south and is bounded by the Mass Bay Community College to the east, residential properties to the west and a wooded area to the north. Currently, the existing one-story, brick Fuller Middle School building occupies the central portion of the site. The project site is occupied by a paved surface parking lot, as well as grassed and landscape areas. Existing ground surface across the project site varies from about Elevation +160.5 to Elevation +166.

In summary, it is understood that the project site was undeveloped land prior to the construction of the existing middle school campus in approximately 1957. It is reported that "Duck Swamp," which was located in the northern portion of the project site was likely backfilled with uncontrolled fill material for the construction of the athletic fields.

Environmental Site History

In September 2001 during the removal of two (2) 20,000-gallon capacity heating oil underground storage tanks (USTs) that formerly serviced the school building at the project site, a release of petroleum hydrocarbons was encountered. According to an Immediate Response Action (IRA) Completion Report and Response Action Outcome (RAO) Statement prepared by Van Hagen Brustlin, Inc. (VHB), a total volatile organic compound (TVOC) PID headspace screening was performed on a soil sample from the tank excavation due to the presence of a petroleum odor. As documented in the above referenced report, results of the screening identified a TVOC value of 129 parts per million (ppm). Pursuant to DEP regulation 310 CMR 40.0313(2)(b), a measured TVOC value equal to or greater than 100 ppm in soil within 10 feet of the sidewall of a UST, and two feet below existing ground surface, meets the criteria of a release which requires notification to the DEP within 72-hours. Based upon the screening results, on September 17, 2001, the DEP was reportedly notified of the 72-hour release condition to which RTN 3-21090 was assigned. VHB stated that an IRA plan which included the excavation of up to 600 cubic yards of soil, the disposal of impacted water, and the evaluation of potential Critical Exposure Pathways (CEPs) was approved by the DEP.

Following excavation activities, on October 24, 2001, VHB indicated that soil samples were collected from the sidewalls of the excavation and submitted to a laboratory for analysis for the presence of extractable petroleum hydrocarbons (EPH) and/or volatile petroleum hydrocarbons (VPH). According to VHB, results of the analysis did not identify concentrations of tested compounds in excess of the applicable DEP cleanup standards.

During October 2001, VHB indicated that a total of four (4) groundwater dewatering wells were installed at the perimeter of the excavation in order to facilitate the UST removal. In their report, VHB stated that between October 9 and 26, 2001, five groundwater samples were collected from each of the wells and submitted to a laboratory to be analyzed for the presence of EPH, VPH, total petroleum hydrocarbons, and gasoline range organics.

According to VHB, results of the analysis were below did not identify tested compounds in excess of the applicable Method 1 GW-2 and GW-3 standards.

As part of the CEP assessment, in October 2001, VHB collected one indoor air sample from the basement of the school building which was submitted to a laboratory for the analysis for the presence of air-phase hydrocarbons (APH). According to VHB, results of the analysis indicated that the detected concentrations APH were below their respective chronic inhalation reference concentrations for non-cancer risk. Based on the above results, VHB concluded that a CEP was not present at the project site.

Following a Method 1 risk characterization which utilized the above testing results, VHB concluded that a condition of No Significant Risk was present at the project site, and that a Class A-2 RAO had been achieved and was filed with the DEP on January 16, 2002.

Proposed Conditions

The proposed redevelopment involves the demolition of the existing school building and the construction of a new school building to the east of the existing school. Based on the information provided to us, the proposed school consists of a 2 to 3-story structure that will occupy a footprint of approximately 55,900 square feet. The proposed building will generally be located within an existing bituminous concrete parking area to the east of the existing school where the existing grade slopes downward from north to south from about Elevation +164 to Elevation +165.2. The lowest level slab of the proposed building will be located at about Elevation +165.5. Except for the area of the proposed auditorium (floor slab at Elevation +163.5), it is understood that the proposed building will not contain any below grade space. In addition, it is understood that a retaining wall and an access ramp will be constructed south of the proposed school. The construction of the ramp will require the placement of upwards to approximately 11 feet of fill.

Elevations cited herein are in feet and are referenced to the North American Vertical Datum of 1988 (NAVD88).

Subsurface Exploration

In 1955, as part of the original school building construction, thirty-four (34) boring logs were performed within or near the footprint of the existing school building, in the area of the existing parking lot and in the field northeast of the existing building.

In 2018, two (2) phases of subsurface explorations consisting of a total of eighteen (18) borings were completed at the project site. Approximate plan locations of the borings are as indicated on the enclosed Subsurface Exploration Plan, **Figure 2**.

A preliminary subsurface exploration program consisting of ten (10) borings was conducted at the project site on February 21, 22 and April 19, 2018 by Northern Drill Services, Inc. under contract to McPhail. The borings were performed utilizing track or truck-mounted

drilling equipment. Borings B-101 through B-109 were terminated at depths ranging from 8 to 31 feet below existing ground surface.

A supplemental subsurface exploration program was conducted on July 26 and 27, 2018 by Carr-Dee Corp. under contract to McPhail, consisting of eight (8) borings, B-201 through B-208. The borings were performed utilizing NW casing. Standard 2-inch O.D. split-spoon samples and standard penetration tests (SPT) were obtained continuously or at 5-foot intervals of depth, in general accordance with the standard procedures described in ASTM D1586. Borings B-201 through B-208 were each terminated at a depth of 17 feet below ground surface.

Boring logs from the 2018 explorations prepared by McPhail and Carr-Dee Corp. are contained in **Appendix B**.

The borings were observed by representatives of McPhail who performed field layout, prepared field logs, obtained and visually classified soil samples, monitored groundwater conditions in the open boreholes, and determined the required boring depths based upon the actual subsurface conditions encountered.

Field locations of the borings were determined by taping from existing site features indicated on the existing conditions plan provided to us. The existing ground surface elevation at each boring location was determined by a level survey performed by our field staff utilizing vertical control information indicated on the plan.

Subsurface Conditions

A detailed description of the subsurface conditions encountered at the project site is contained in the Final Foundation Engineering Report prepared by McPhail dated September 10, 2018. The following is a description of the generalized subsurface conditions encountered across the project site from ground surface downward.

Directly below the surface treatments, which consist of a 3-inch thickness of asphalt or 6-inches of topsoil, fill material of about 2.2- to 7.5-foot in thickness was encountered in the borings. The fill material was observed to generally range from a very loose to dense gray to brown sand and gravel with trace silt to a sand with some gravel and silt.

Underlying the fill material, a discontinuous alluvial/organic silt deposit and/or peat was encountered, which ranged in consistency from a very loose to compact, dark brown to fine to medium sand with trace to some organic silt and peat fibers to a peaty sand with trace gravel. Generally, the alluvial/organic silt deposit and/or peat, where encountered, ranged from about 2 to 5.5 feet in thickness.

Below the fill material and/or alluvial/organic silt deposits, a natural lacustrine deposit was encountered within borings B-102 and B-107 at a depth of 8 feet below ground surface corresponding to Elevation +156.9 and Elevation +154.9, respectively. The lacustrine

deposit was observed to vary from a compact, light gray, silt with trace sand to silty sand with trace gravel and clay.

Below the fill material, alluvial/organic silt, peat and lacustrine deposits, a natural glacial outwash deposit was encountered at depths ranging from 4 to 9 feet below ground surface corresponding to Elevation +159.4 to Elevation +155.6. The glacial outwash was observed to vary from a compact to very dense, brown to gray, sand with trace silt to a sand and gravel with some silt.

At the time of the 2018 borings, groundwater levels where measured within the completed boreholes performed within the project site. The groundwater levels were observed to vary from about 2.5 to approximately 6.5 feet below the existing ground surface corresponding to about Elevation +159.6 to Elevation +157.8. It is anticipated that future groundwater levels across the project site may vary from those reported herein due to factors such as normal seasonal changes, periods of heavy precipitation, and alterations of existing drainage patterns or may become perched on the relatively impervious organic deposit.

Environmental Regulations Governing Off-Site Removal of Soil

Currently, off-site reuse and disposal of contaminated soils are governed by the 310 CMR 40.0000, the Massachusetts Contingency Plan (MCP). In general, soils exhibiting contaminant concentrations above the RCS-1 reportable levels contained in the MCP are considered regulated for off-site disposal and require the use of either a Bill of Lading, Material Shipping Record or Uniform Hazardous Waste Manifest.

The off-site transport and reuse of fill material and natural soil which exhibit concentrations of oil and/or hazardous material that are below the MCP release notification thresholds, are not subject to an MCP release notification exemption, and are not otherwise considered Hazardous Waste, are not considered to be regulated for off-site re-use. However, if transported to a project site where large quantities of backfill are required, the on-site reuse of the subject soil is regulated by the DEP's Interim Policy in the Re-Use of Soil for Large Reclamation Projects Policy #COMM-15-01 and Similar Soils Provision Guidance dated October 2, 2013, WSC#-13-500.

Contaminants regulated by the MCP and the above referenced policies include total petroleum hydrocarbons (TPH), volatile organic compounds (VOCs), heavy metals, semi-volatile organic compounds (SVOCs), polychlorinated biphenyls (PCBs), pH, reactivity and ignitability.

Soil Screening Results

Soil samples obtained from select borings completed in 2018 were screened for the presence of Total Volatile Organic Compounds (TVOC). The TVOC screening results are summarized in **Table 1**. The headspace screening was performed in accordance with DEP's "Jar Headspace Analytical Screening Procedure," Attachment II to the Interim Remediation

Waste Management Policy for Petroleum Contaminated Soils, #WSC-94-400. The screening was performed with a MiniRAE 3000 Photoionization Detector calibrated to isobutylene equivalent VOCs.

A total of 71 soil samples were obtained during the 2018 subsurface exploration program completed at the project site and screened for the presence of TVOCs. In summary, TVOC results for all samples ranged from 0.0 parts per million (ppm) up to 1.5 ppm. The samples did not exhibit visual or olfactory evidence of contamination. In general, soil samples exhibiting the highest levels of TVOCs were selected for laboratory testing for the parameters discussed below.

Soil Characterization for Off-Site Removal

For the purposes of providing recommendations for the off-site management of the fill material, our soil pre-characterization program involved the sampling and chemical analysis of fill material which was obtained from borings advanced to the anticipated depth of the bottom of excavation for foundation construction and associated site development. Based on the proposed scope of development as described herein, it is anticipated that up to 3,800 cubic yards of excess soil will be generated during construction activities.

It is anticipated that portions of the excavated fill material may be re-used on-site as ordinary fill provided it is primarily granular, excavated during non-freezing conditions in relatively dry conditions, is maintained in a dry condition, and can be properly compacted.

Selection of samples to be tested was based upon obtaining representative coverage of the project site area and the depth of excavation anticipated for the proposed scope of work. Composite samples of the fill material were comprised of individual discrete samples obtained from the explorations and stockpiles. The chemical testing frequency utilized to pre-characterize the fill material for off-site removal generally consisted of a minimum of one sample of the fill per approximately 500 cubic yards.

Laboratory Analysis

Representative samples of the fill material were submitted for laboratory analysis for the presence of pH, reactivity, flashpoint, total RCRA-8 metals, semi-volatile organic compounds (SVOCs), PCBs, total petroleum hydrocarbons (TPH), and/or polyaromatic hydrocarbons (PAHs). The discrete soil sample exhibiting the highest headspace reading from each composite sample was submitted for VOC analysis. Laboratory analytical results are summarized in **Table 2** and laboratory analytical reports are included in **Appendix C.**

Fill Material

Total Metals

A total of nine (9) composite samples of the fill material were submitted to a laboratory for chemical testing for the presence of total RCRA-8 metals (arsenic, barium, cadmium, chromium, lead, mercury, selenium, and silver).

The chemical test results indicated the presence of the total metals analyzed at concentrations below the applicable RCS-1 reporting criteria for the compounds analyzed. Specifically, concentrations of total cadmium, mercury, selenium, and silver were not detected (ND) above laboratory detection limits. Maximum concentrations of total arsenic (8.15 milligrams per kilogram (mg/kg)), barium (52.5 mg/kg), chromium (18 mg/kg), and lead (39 mg/kg) detected in samples analyzed were at concentrations below applicable RCS-1 reporting criteria.

SVOCs

A total of eight (8) composite samples of the fill material were analyzed for the presence of SVOCs. SVOCs constituents were detected in the samples at concentrations below applicable RCS-1 Reportable Concentrations with the exception of the composite fill sample identified as "B-207, 0.4-7.5 Fill." Specifically, acenaphthylene was detected at a concentration of 1.4 mg/kg, which is above the applicable reportable concentration of 1 mg/kg. This detected concentration of acenaphthylene is considered to be attributable to the observed presence of trace ash, cinder and pieces of asphalt observed in the soil as opposed to a release to the environment. Accordingly, acenaphthylene is considered exempt from DEP notification pursuant to Section 40.0317 of the MCP.

PCBs

As part of our recent analytical testing, eight (8) composite samples of the fill material were submitted for laboratory analysis for the presence of PCBs. PCBs were not identified above the laboratory detection limits.

VOCs

As part of our recent analytical testing, eight (8) discrete samples of the fill material were submitted for laboratory analysis for the presence of VOCs. The results did not identify the presence of VOCs above applicable RCS-1 Reportable Concentrations.

TPH

As part of our recent analytical testing, a total of eight (8) composite samples of the fill material were submitted for laboratory analysis for the presence of TPH. The test results

identified the presence of TPH in the samples tested at concentrations below the applicable RCS-1 Reportable Concentration of 1,000 mg/kg.

PAHs

As part of our analytical testing, a total of one (1) composite sample of the fill material was submitted for laboratory analysis for the presence of PAHs. The test results did not identify the presence of PAHs in the sample tested at concentrations above the laboratory detection limits.

In summary, the analytical results of the fill material did not identify concentrations of the tested compounds at levels that require notification to the DEP and management pursuant to the provisions of the 310 CMR 40.0000 of the MCP.

Recommendations for Off-site Removal of Soil

Based upon the above-referenced soil data, the following three (3) categories of soil have been defined:

1. **UNREGULATED:** Materials characterized by concentrations of the various chemical parameters well below the RCS-1 soil standards as defined by the MCP and below the published DEP defined Background levels.

2. **LESS THAN RCS-1:** Material classified as Less Than RCS-1 is characterized by concentrations of the various constituents of interest, the analyzed concentrations of which are below the RCS-1 soil standards as defined by the MCP and below the DEP defined background levels for urban fill environments for all of the compounds analyzed. All material classified as Less Than RCS-1 shall be excavated and reused at an approved off-site location in accordance with DEP's Similar Soils Provision Guidance dated September 4, 2014, WSC#-13-500.

3. **UNLINED LANDFILL:** Material classified as Unlined Landfill is characterized by all of the following: TPH concentrations below 2,500 milligrams per kilogram (mg/kg), PCB concentrations below 2 mg/kg, SVOC concentrations above the MCP's S-1 soil standards but having a total SVOC concentration below 100 mg/kg, total lead concentrations below 1,000 mg/kg and TCLP lead concentrations below 5 mg/l. Material classified as Unlined Landfill shall be excavated and re-used as daily cover material at an in-state unlined landfill.

The enclosed **Figure 3** provides a color-coded classification of the various soil removal recommendations for the fill material.

SUMMARY TABLE OF CHARACTERIZED VOLUMES OF MATERIAL/CATERGORIES FOR OFF-SITE RE-USE

SOIL CLASSIFICATION	FILL (cu./yds.)
UNREGULATED	2,000
LESS THAN RCS-1*	1,500
UNLINED LANDFILL	500
TOTALS	4,000

*The scope of laboratory analysis was based upon the requirements of DEP Policy #Comm-97-001 Re-use and Disposal of Contaminated Soil at Massachusetts Landfills. Further, soil sampling and analyses for additional compounds may be necessary to meet specific receiving facility requirements.

Recommendations for Soil Management during Excavation

Based upon the results of laboratory analyses and in consideration of the proposed scope of site development, up to 2,000 cubic yards of fill material represented by the samples of fill submitted for analysis meet the criteria as Unregulated, up to 1,500 cubic yards of material represented by the samples of fill submitted for analysis meet the criteria for re-use at a Less Than RCS-1 facility and up to 500 cubic yards of material represented by the samples of fill submitted for the analysis meet the criteria for re-use at an Unlined Landfill facility.

Construction should be performed under a site-specific health and safety plan to minimize possible exposure to the low levels of contaminants present in the existing site soils. The site-specific health and safety plan as well as general construction considerations should be employed to protect the general public and workers from exposure to the excavated soils.

All temporarily stockpiled soil should be placed on and covered by 6-mil polyethylene sheeting. Measures to minimize airborne dust should also be employed during earthwork operations, such as the use of water during dry periods. Soils that might be tracked onto the streets by trucks and construction equipment should be removed from these vehicles before they leave the construction site.

Off-site reuse and/or disposal of the excavated fill material resulting from construction of the proposed project will require implementation of the Material Shipping Record process to track the disposition of the excavated material.

It is anticipated that portions of the excavated fill material may be re-used on-site as ordinary fill provided it is primarily granular, excavated during non-freezing conditions in relatively dry conditions, is maintained in a dry condition, and can be properly compacted. It is recommended to prioritize the re-use of the material characterized for acceptance at an unlined landfill in order to keep disposal costs down.

We trust that the above information is sufficient for your present requirements. Should you have any questions concerning the recommendations presented herein, please do not hesitate to call us.

Very truly yours,

McPHAIL ASSOCIATES, LLC

Kathryn E. Hanrahan

Joseph G. Lombardo, L.S.P.

N:\Working Documents\Reports\6473_SMP_121818.docx

KEH/jgl

FIGURE 1

McPHAIL ASSOCIATES, LLC

Geotechnical and Geoenvironmental Engineers

2269 Massachusetts Avenue
Cambridge, MA 02140
617/868-1420
617/868-1423 (Fax)
www.mcphailgeo.com

N

SCALE 1:25,000

PROJECT LOCATION PLAN

FULLER MIDDLE SCHOOL

FRAMINGHAM MASSACHUSETTS

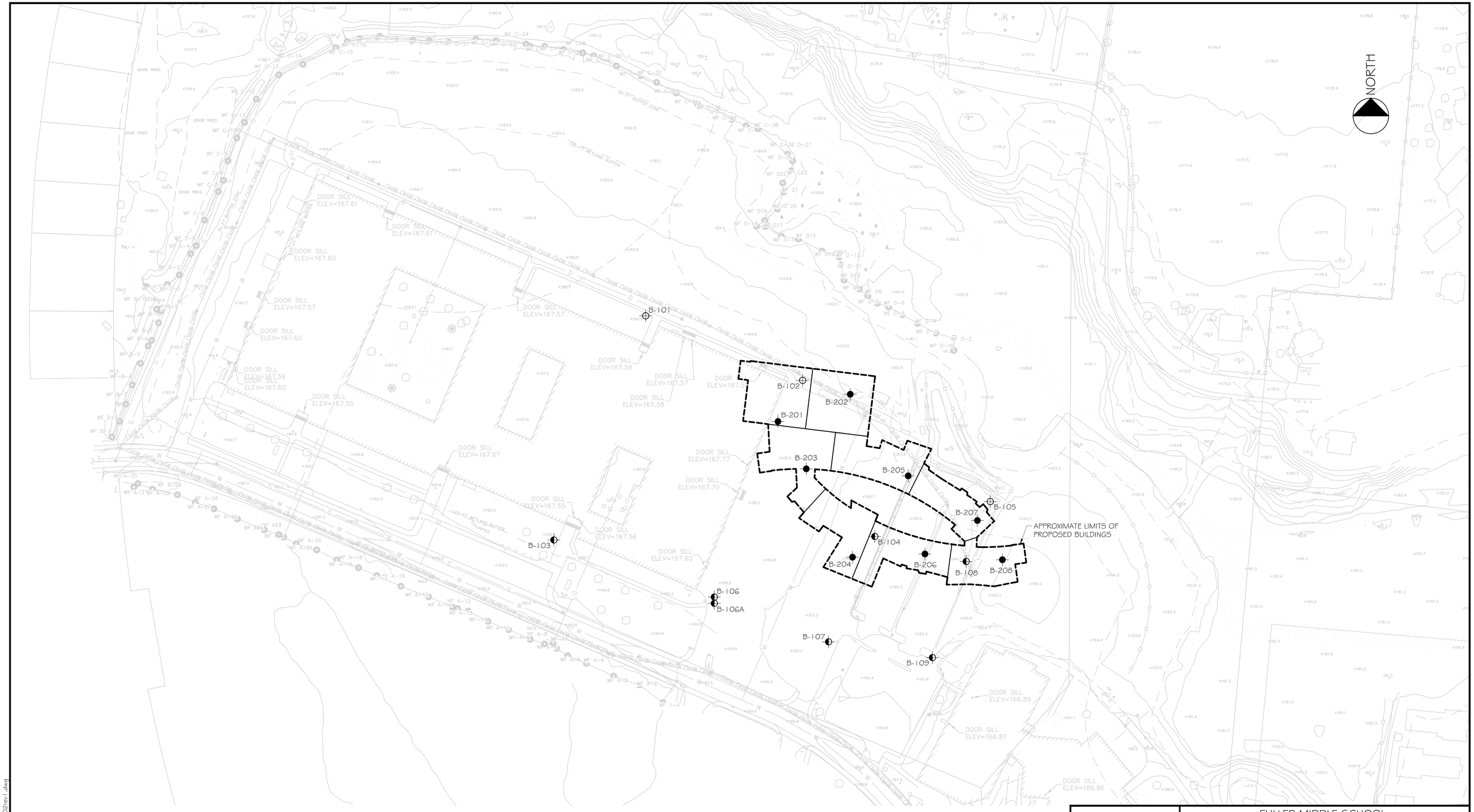

LEGEND

- APPROXIMATE LOCATION OF BORING PERFORMED BY CARR-DEE CORP. ON JULY 26 & 27, 2018 FOR McPHAIL ASSOCIATES, LLC
- APPROXIMATE LOCATION OF BORING PERFORMED BY NORTHERN DRILL SERVICES, INC. ON APRIL 19, 2018 FOR McPHAIL ASSOCIATES, LLC
- APPROXIMATE LOCATION OF BORING PERFORMED BY NORTHERN DRILL SERVICES, INC. ON FEBRUARY 21 & 22, 2018 FOR McPHAIL ASSOCIATES, LLC

REFERENCE: THIS PLAN WAS PREPARED FROM A 40-SCALE DRAWING ENTITLED "EXISTING CONDITIONS PLAN" DATED NOVEMBER 20, 2017 PROVIDED BY JONATHAN LEVI ARCHITECTS

GRAPHIC SCALE

60 0 60 120 240

McPHAIL ASSOCIATES, LLC
Geotechnical and Geoenvironmental Engineers
2269 Massachusetts Avenue
Cambridge, MA 02140
617/868-1420
617/868-1423 (Fax)
www.mcphailgeo.com

FULLER MIDDLE SCHOOL

FRAMINGHAM MASSACHUSETTS

PRELIMINARY SOIL MANAGEMENT PLAN

FOR

JONATHAN LEVI ARCHITECTS

BY

McPHAIL ASSOCIATES, LLC

Date: DECEMBER 2018	Dwn: M.B.S.	Chkd: F.B.K.	Scale: 1" = 60'
Project No: 6473			FIGURE 2

FILE NAME: N:\Acad\DBS\6473\PS\PR6473-E02rev1.dwg

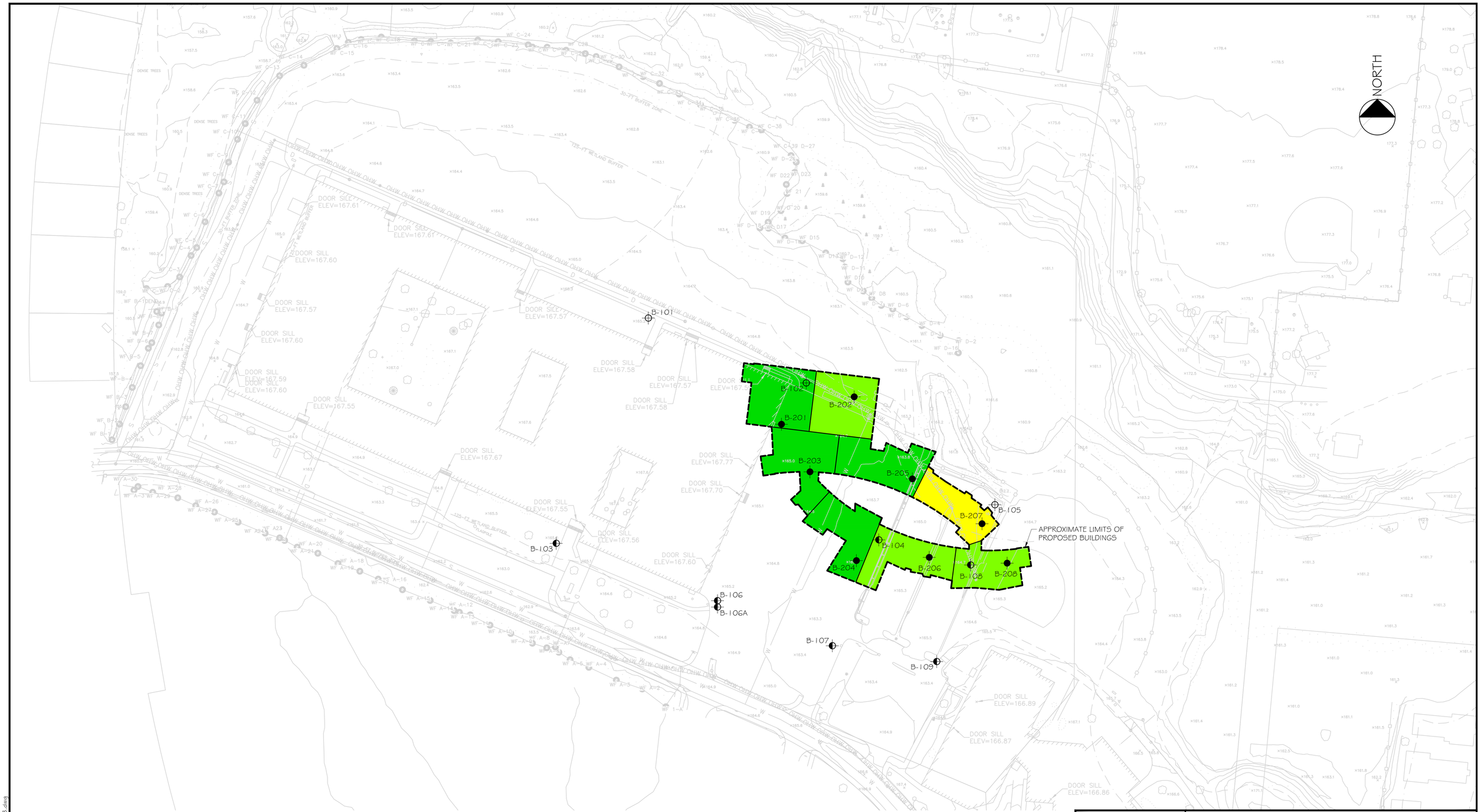

LEGEND

- APPROXIMATE LOCATION OF BORING PERFORMED BY CARR-DEE CORP. ON JULY 26 & 27, 2018 FOR McPHAIL ASSOCIATES, LLC
- APPROXIMATE LOCATION OF BORING PERFORMED BY NORTHERN DRILL SERVICES, INC. ON APRIL 19, 2018 FOR McPHAIL ASSOCIATES, LLC
- APPROXIMATE LOCATION OF BORING PERFORMED BY NORTHERN DRILL SERVICES, INC. ON FEBRUARY 21 & 22, 2018 FOR McPHAIL ASSOCIATES, LLC

- UNREGULATED
- LESS THAN RCS-1
- UNLINED LANDFILL

REFERENCE: THIS PLAN WAS PREPARED FROM A 40-SCALE DRAWING ENTITLED "EXISTING CONDITIONS PLAN" DATED NOVEMBER 20, 2017 PROVIDED BY JONATHAN LEVI ARCHITECTS

GRAPHIC SCALE

60 0 60 120 240

McPHAIL ASSOCIATES, LLC
Geotechnical and Geoenvironmental Engineers
2269 Massachusetts Avenue
Cambridge, MA 02140
617/868-1420
617/868-1423 (Fax)
www.mcphailgeo.com

FULLER MIDDLE SCHOOL

FRAMINGHAM MASSACHUSETTS

SOIL MANAGEMENT PLAN

FOR

JONATHON LEVI ARCHITECTS

BY

McPHAIL ASSOCIATES, LLC

Date: DECEMBER 2018	Dwn: M.B.S.	Chkd: K.E.H.	Scale: 1" = 60'
Project No: 6473			FIGURE 3

FILE NAME: N:\Acad\DBS\6473\PSM\PE6473-E03.dwg

TABLE 1
PID Headspace Results - Total Volatile Organic Compounds

Fuller Middle School
Framingham MA
McPhail Job No. 6473

EXPLORATION NO.	SAMPLE NO.	SAMPLE DEPTH	SAMPLE TYPE	PID READING (ppm)	VISUAL/OLFACTORY PETROLEUM EVIDENCE
BACKGROUND				0.0	
B-101	S-1	0-2'	Fill	0.0	None
	S-2	2-4'	Fill	0.0	None
	S-3	4-5'	Fill	0.0	None
	S-3A	5-6'	Alluvial Deposit	0.1	None
	S-4	9-11'	Glacial Outwash	0.0	None
	S-5	14-16'	Glacial Outwash	0.0	None
	S-6	19-21'	Glacial Outwash	0.0	None
	S-7	24-26'	Glacial Outwash	0.0	None
B-102	S-1	0-2'	Fill	0.1	None
	S-2	2-4'	Fill	0.1	None
	S-3	4-6'	Fill	0.0	None
	S-4	6-8'	Alluvial Deposit	0.0	None
	S-5	8-10'	Lacustrine	0.0	None
	S-6	14-16'	Lacustrine	0.1	None
	S-7	19-21'	Lacustrine	0.0	None
	S-8	24-26'	Lacustrine	0.0	None
B-105	S-1	0-2'	Fill	0.1	None
	S-2	2-4'	Fill	0.2	None
	S-3	4-6'	Glacial Outwash	0.1	None
	S-4	6-8'	Glacial Outwash	0.1	None
	S-5	8-10'	Glacial Outwash	0.1	None
	S-6	14-16'	Glacial Outwash	0.1	None
	S-7	19-21'	Glacial Outwash	0.0	None
	S-8	24-26'	Lacustrine	0.0	None
	S-9	29-31'	Lacustrine	0.0	None
B-201	S-1	0.5-2'	Fill	1.1	None
	S-2	2-4'	Fill	0.2	None
	S-3	4-5'	Fill	0.3	None
	S-3A	5-6'	Alluvial Deposit	0.4	None
	S-4	10-12'	Alluvial Deposit	0.2	None
	S-5	15-17'	Alluvial Deposit	0.3	None
B-202	S-1	0.5-2'	Fill	0.0	None
	S-2	2-4'	Fill	0.1	None
	S-3	4-5'	Fill	0.1	None
	S-3A	5-6'	Peat/Organic Silt	0.3	None
	S-4	10-12'	Glacial Outwash	0.2	None
	S-5	15-17'	Glacial Till	0.2	None
B-203	S-1	0.4-2'	Fill	0.1	None
	S-2	2-3.5'	Fill	0.6	None
	S-2A	3.5-4'	Fill	0.2	None
	S-3	4-6'	Alluvial Deposit	0.4	None
	S-4	10-12'	Alluvial Deposit	0.7	None
	S-5	15-17'	Alluvial Deposit	0.2	None
B-204	S-1	0.5-2'	Fill	0.0	None
	S-2	2-4'	Fill	0.0	None
	S-3	4-6'	Glacial Outwash	0.7	None
	S-4	10-12'	Glacial Outwash	0.1	None
	S-5	15-17'	Glacial Outwash	0.1	None
B-205	S-1	0.5-2'	Fill	0.2	None
	S-2	2-4'	Fill	0.3	None
	S-3	4-4.5'	Glacial Outwash	0.1	None
	S-3A	4.5-5'	Glacial Outwash	0.3	None
	S-3B	5-6'	Glacial Outwash	0.2	None
	S-4	10-12'	Glacial Outwash	0.0	None
	S-5	15-17'	Glacial Outwash	0.0	None
B-206	S-1	0.5-2'	Fill	0.2	None
	S-2	2-4'	Fill	0.8	None
	S-3	4-6'	Glacial Outwash	0.3	None
	S-4	10-12'	Glacial Outwash	0.2	None
	S-5	15-17'	Glacial Outwash	0.0	None
B-207	S-1	0.5-2'	Fill	1.5	None
	S-2	2-4'	Fill	0.5	None
	S-3	4-6'	Glacial Outwash	0.0	None
	S-4	6-7.5	Glacial Outwash	0.1	None
	S-4A	7.5-8	Glacial Outwash	0.0	None
	S-5	10-12'	Glacial Outwash	0.2	None
B-208	S-1	0.6-2'	Fill	0.1	None
	S-2	2-4'	Fill	1.2	None
	S-3	4-6'	Glacial Outwash	0.4	None
	S-4	10-12'	Glacial Outwash	0.7	None
	S-5	15-17'	Glacial Outwash	0.2	None

Equipment: MiniRae3000 Detector with 10.6 eV Probe
PPM-Parts Per Million

TABLE 2
Chemical Test Results

Fuller Middle School
Framingham, MA
McPhail Job No. 6473

LOCATION	MA Unlined Landfill Criteria	RCS-1	B-201 0.5-5 FILL	B-201, S-1 0.5-2'	B-102 (COMP)	B-202 0.5-5 FILL	B-202, S-3 4-5'	B-203 0.4-3.5 FILL	B-203, S-2 2-3.5	B-204 0-4 FILL	B-204, S-2 2.4'	B-205 0-4.5 FILL	B-205, S-2 2-4	B-206 0.5-4 FILL	B-206, S-2 2-4	B-207 .4-7.5 FILL	B-207, S-2 2-4	B-208 0.6-4 FILL	B-208, S-2 2-4
SAMPLING DATE			7/26/2018	7/26/2018	4/24/2018	7/27/2018	7/27/2018	7/26/2018	7/26/2018	7/26/2018	7/26/2018	7/26/2018	7/26/2018	7/27/2018	7/27/2018	7/27/2018	7/27/2018	7/27/2018	7/27/2018
LAB SAMPLE ID			L1828859-06	L1828859-05	L1814382-04	L1829113-02	L1829113-01	L1828859-08	L1828859-07	L1828859-04	L1828859-03	L1828859-02	L1828859-01	L1829113-06	L1829113-05	L1829113-04	L1829113-03	L1829113-08	L1829113-07
SAMPLE TYPE			Fill	Fill	Fill	Fill	Fill	Fill	Fill	Fill	Fill	Fill	Fill	Fill	Fill	Fill	Fill	Fill	Fill
SAMPLE DEPTH (ft.)			0.5-5	0.5-2	0-6	0.5-5	4-5	0.4-3.5	2-3.5	0-4	2-4	0-4.5	2-4	0.5-4	2.-4	0.4-7.5	2-4	0.6-4	2-4
General Chemistry																			
Specific Conductance @ 25 C			41	-		30	-	330	-	23	-	14	-	220	-	260	-	140	-
Solids, Total			90.1	94	86.8	82.7	80.3	94.8	93.5	89.5	87.3	86.2	85.6	86.8	87.7	86.4	86.3	83.6	90.2
pH (H)			5.3	-	-	6.4	-	6.6	-	7.1	-	7.2	-	8.1	-	7	-	7	-
Cyanide, Reactive			ND(10)	-	-	ND(10)	-	ND(10)	-	ND(10)	-	ND(10)	-	ND(10)	-	ND(10)	-	ND(10)	-
Sulfide, Reactive			ND(10)	-	-	ND(10)	-	ND(10)	-	ND(10)	-	ND(10)	-	ND(10)	-	ND(10)	-	ND(10)	-
Ignitability of Solids					-														
Ignitability			NI	-	-	NI	-	NI	-	NI	-	NI	-	NI	-	NI	-	NI	-
MCP Total Metals (mg/kg)																			
Arsenic, Total	40	20	8.15	-	5.06	5.48	-	2.85	-	4.37	-	7.72	-	3.92	-	3.58	-	4.75	-
Barium, Total		1000	27.4	-	27.5	51.6	-	35.6	-	19.6	-	22.4	-	52.5	-	24.8	-	27.4	-
Cadmium, Total	30	70	ND(0.422)	-	ND(0.449)	ND(0.47)	-	ND(0.42)	-	ND(0.435)	-	ND(0.452)	-	ND(0.45)	-	ND(0.441)	-	ND(0.464)	-
Chromium, Total	1000	100	10.8	-	11.1	10.3	-	18	-	15.2	-	10.7	-	18	-	10.3	-	12.3	-
Lead, Total	1000	200	2.99	-	3.94	9.36	-	5.56	-	4.28	-	4.4	-	22	-	39	-	13.3	-
Mercury, Total	10	20	ND(0.07)	-	ND(0.074)	ND(0.076)	-	ND(0.066)	-	ND(0.07)	-	ND(0.074)	-	ND(0.073)	-	0.073	-	ND(0.075)	-
Selenium, Total		400	ND(2.11)	-	ND(2.24)	ND(2.35)	-	ND(2.1)	-	ND(2.18)	-	ND(2.26)	-	ND(2.25)	-	ND(2.21)	-	ND(2.32)	-
Silver, Total		100	ND(0.422)	-	ND(0.449)	ND(0.47)	-	ND(0.42)	-	ND(0.435)	-	ND(0.452)	-	ND(0.45)	-	ND(0.441)	-	ND(0.464)	-
MCP Polychlorinated Biphenyls (mg/kg)					-														
SUM	2		ALL ND	-	-	ALL ND	-	ALL ND	-	ALL ND	-	ALL ND	-	ALL ND	-	ALL ND	-	ALL ND	-
MCP Semivolatile Organics (mg/kg)					-														
Fluoranthene		1000	0.15	-	-	1.2	-	ND(0.1)	-	ND(0.11)	-	ND(0.12)	-	0.47	-	3.2	-	ND(0.12)	-
Naphthalene		4	ND(0.18)	-	-	ND(0.2)	-	ND(0.18)	-	ND(0.18)	-	ND(0.19)	-	ND(0.19)	-	0.23	-	ND(0.19)	-
Benzo(a)anthracene		7	ND(0.11)	-	-	0.5	-	ND(0.1)	-	ND(0.11)	-	ND(0.12)	-	0.22	-	2	-	ND(0.12)	-
Benzo(a)pyrene		2	ND(0.15)	-	-	0.53	-	ND(0.14)	-	ND(0.14)	-	ND(0.15)	-	0.18	-	1.8	-	ND(0.15)	-
Benzo(b)fluoranthene		7	ND(0.11)	-	-	0.92	-	ND(0.1)	-	ND(0.11)	-	ND(0.12)	-	0.23	-	2.1	-	ND(0.12)	-
Benzo(k)fluoranthene		70	ND(0.11)	-	-	0.23	-	ND(0.1)	-	ND(0.11)	-	ND(0.12)	-	ND(0.11)	-	0.59	-	ND(0.12)	-
Chrysene		70	ND(0.11)	-	-	0.66	-	ND(0.1)	-	ND(0.11)	-	ND(0.12)	-	0.22	-	2	-	ND(0.12)	-
Acenaphthylene		1	ND(0.15)	-	-	ND(0.16)	-	ND(0.14)	-	ND(0.14)	-	ND(0.15)	-	ND(0.15)	-	**1.4**	-	ND(0.15)	-
Anthracene		1000	ND(0.11)	-	-	ND(0.12)	-	ND(0.1)	-	ND(0.11)	-	ND(0.12)	-	ND(0.11)	-	1.1	-	ND(0.12)	-
Benzo(ghi)perylene		1000	ND(0.15)	-	-	0.41	-	ND(0.14)	-	ND(0.14)	-	ND(0.15)	-	ND(0.15)	-	1.1	-	ND(0.15)	-
Fluorene		1000	ND(0.18)	-	-	ND(0.2)	-	ND(0.18)	-	ND(0.18)	-	ND(0.19)	-	ND(0.19)	-	0.38	-	ND(0.19)	-
Phenanthrene		10	ND(0.11)	-	-	0.33	-	ND(0.1)	-	ND(0.11)	-	ND(0.12)	-	0.4	-	2	-	ND(0.12)	-
Dibenzo(a,h)anthracene		0.7	ND(0.11)	-	-	ND(0.12)	-	ND(0.1)	-	ND(0.11)	-	ND(0.12)	-	ND(0.11)	-	0.32	-	ND(0.12)	-
Indeno(1,2,3-cd)pyrene		7	ND(0.15)	-	-	0.45	-	ND(0.14)	-	ND(0.14)	-	ND(0.15)	-	ND(0.15)	-	1.1	-	ND(0.15)	-
Pyrene		1000	0.11	-	-	0.95	-	ND(0.1)	-	ND(0.11)	-	ND(0.12)	-	0.4	-	3.9	-	ND(0.12)	-
SUM	100		0.26	-	-	6.18	-	ALL ND	-	ALL ND	-	ALL ND	-	2.12	-	23.22	-	ALL ND	-
MCP Volatile Organics by 8260/5035 (mg/kg)																			
Acetone		6	-	ND(0.0089)	-	-	0.037	-	ND(0.011)	-	0.021	-	0.056	-	0.033	-	0.065	-	0.022
Methyl ethyl ketone		4	-	ND(0.0089)	-	-	0.013	-	ND(0.011)	-	0.022	-	0.025	-	ND(0.0071)	-	0.01	-	ND(0.0072)
SUM	4		-	-	-	-	0.05	-	-	-	0.043	-	0.081	-	0.033	-	0.075		0.022
Petroleum Hydrocarbon Quantitation (mg/kg)																			
TPH	2500	1000	ND(36.2)	-		92.2	-	ND(34.4)	-	ND(36.2)	-	ND(38.2)	-	171	-	389	-	80.1	-
MCP PAHs (mg/kg)																			
SUM	100				ALL ND														
Off-site Reuse Classification			UNREGULATED			LESS THAN RCS-1		UNREGULATED		UNREGULATED		UNREGULATED		LESS THAN RCS-1		UNLINED LANDFILL		LESS THAN RCS-1	

ND - not detected in excess of the
laboratory method detection limits in ()
Bold - exceeds RCS-1 Standards

APPENDIX A:

LIMITATIONS

LIMITATIONS

The purpose of this letter report was to assess the environmental considerations pursuant to Massachusetts General Laws Chapter 21E and the Massachusetts Contingency Plan, 310 CMR 40.0000, associated with the fill material at the project site. The above observations were made under the conditions stated in this report. The conclusions presented above were based on these observations. If variations in the nature and extent of subsurface conditions between the widely spaced subsurface explorations become evident in the future, it will be necessary to re-evaluate the conclusions presented herein after performing on-site observations and noting the characteristics of any variations.

The conclusions submitted in this report are based in part upon chemical test data obtained from analysis of a limited number of soil samples. Chemical analyses have been performed for specific constituents during the course of this investigation, as described in the text. However, it should be noted that additional chemical constituents not searched for during the current study may be present in soil and/or groundwater at the site.

This data has been reviewed, and interpretations have been made in the text. It should also be noted that fluctuations in the types and levels of contaminants and variations in their flow paths may occur due to changes in seasonal water table, past practices used in disposal and other factors.

No attempt was made to check on the compliance of present or past owners of the site with federal, state or local laws and regulations except as otherwise documented herein. McPhail Associates, LLC did not perform testing or analyses to determine the presence or concentration of asbestos at the site or in the environment at the site.

This study and report have been prepared on behalf of and for the exclusive use of Jonathan Levi Architects solely for use in managing soils at the site. This letter report and the findings contained herein shall not, in whole or in part, be disseminated or conveyed to any other party nor used in whole or in part by any other party without prior written consent of McPhail Associates, LLC.

APPENDIX B:

BORING LOGS PREPARED BY MCPHAIL AND CARR-DEE CORPORATION

Project:	Fuller Middle School	**Job #:**	6473
Location:	31 Flagg Drive	**Date Started:**	4-19-18
City/State:	Framingham, MA	**Date Finished:**	4-19-18

Boring No.

B-101

Contractor: Northern Drill Service, Inc.
Driller/Helper: Z. Nada/J. Stevens
Logged By/Reviewed By: C. Connors
Surface Elevation (ft): 165.1

Casing Type/Depth (ft): 4"
Casing Hammer (lbs)/Drop (in): 140lb/30"
Sampler Size/Type: 24" Split Spoon
Sampler Hammer (lbs)/Drop (in): 140lb/30"

Groundwater Observations

Date	Depth	Elev.	Notes

Depth (ft)	Elev. (ft)	Symbol	Depth/EL to Strata Change (ft)	Stratum	Sample TVOC (ppm)	N-Value / RQD	No.	Pen. /Rec. (in)	Depth (ft)	Blows/6" / Min/ft	Sample Description and Boring Notes
			0.5 / 164.6	TOPSOIL							
1	164			FILL	0.0	9	S1	24/14	0.0-2.0	2 4 5 6	Loose, light borwn to brown, SILTY SAND, some gravel. (Fill)
2	163										
3	162				0.0	2	S2	24/16	2.0-4.0	2 1 1 1	Very loose, brown to yellow/brown, SILTY SAND, trace gravel. (Fill)
4	161				0.0	4	S3	12/6	4.0-5.0	2 2	Very loose to loose, yellow/brown, SAND, some silt, trace gravel. (Fill)
5	160		5.0 / 160.1	ALLUVIAL ORGANIC SILT DEPOSIT	0.1	4	S3A	12/6	5.0-6.0	2 6	Very loose to loose, dark brown, fine to medium grain, SAND, trace to some organic silt and peat fibers. (Alluvial Organic Silt Deposit)
6	159										
7	158										
8	157										
9	156		9.0 / 156.1	GLACIAL OUTWASH	0.0	8	S4	24/8	9.0-11.0	3 4 4 5	Loose, light brown to gray, medium to coarse grain, SAND, trace silt and gravel. (Glacial Outwash)
10	155										
11	154										
12	153										
13	152										
14	151				0.0	6	S5	24/6	14.0-16.0	2 3 3 4	Loose, light brown to brown, medium to coarse grain, SAND, trace silt and gravel. (Glacial Outwash)
15	150										
16	149										
17	148										
18	147										
19	146					20	S6	24/4	19.0-21.0	9 11 9 7	Compact, light brown to gray, SANDY GRAVEL, trace silt. (Glacial Outwash)
20	145										
21	144										
22	143										

GRANULAR SOILS	
BLOWS/FT.	DENSITY
0-4	V.LOOSE
4-10	LOOSE
10-30	COMPACT
30-50	DENSE
>50	V.DENSE

COHESIVE SOILS	
BLOWS/FT.	CONSISTENCY
<2	V.SOFT
2-4	SOFT
4-8	FIRM
8-15	STIFF
15-30	V.STIFF
>30	HARD

SOIL COMPONENT

DESCRIPTIVE TERM	PROPORTION OF TOTAL
"TRACE"	0-10%
"SOME"	10-20%
"ADJECTIVE" (eg SANDY, SILTY)	20-35%
"AND"	35-50%

SOIL CONTAINING THREE COMPONENTS EACH OF WHICH COMPRISE AT LEAST 25% OF THE TOTAL ARE CLASSIFIED AS "A WELL-GRADED MIXTURE OF"

Notes:

Total Volatile Organic Compounds (TVOC) measured w/ PID Model:
TVOC Background: ppm
Weather:
Temperature:

McPHAIL ASSOCIATES, LLC
2269 MASSACHUSETTS AVENUE
CAMBRIDGE, MA 02140
TEL: 617-868-1420
FAX: 617-868-1423

Project:	Fuller Middle School	**Job #:**	6473
Location:	31 Flagg Drive	**Date Started:**	4-19-18
City/State:	Framingham, MA	**Date Finished:**	4-19-18

Boring No.

B-101

Contractor: Northern Drill Service, Inc.
Driller/Helper: Z. Nada/J. Stevens
Logged By/Reviewed By: C. Connors
Surface Elevation (ft): 165.1

Casing Type/Depth (ft): 4"
Casing Hammer (lbs)/Drop (in): 140lb/30"
Sampler Size/Type: 24" Split Spoon
Sampler Hammer (lbs)/Drop (in): 140lb/30"

Groundwater Observations

Date	Depth	Elev.	Notes

Depth (ft)	Elev. (ft)	Symbol	Depth/EL to Strata Change (ft)	Stratum	Sample TVOC (ppm)	N-Value / RQD	No.	Pen. /Rec. (in)	Depth (ft)	Blows/6" / Min/ft	Sample Description and Boring Notes
24	141										
25	140		26.0 / 139.1	GLACIAL OUTWASH		28	S7	24/8	24.0-26.0	14 16 12 9	Compact, gray, well graded mixture of SILT, SAND and GRAVEL, trace clay. (Glacial Outwash)
26	139			Bottom of borehole 26 feet below ground surface.							
27	138										
28	137										
29	136										
30	135										
31	134										
32	133										
33	132										
34	131										
35	130										
36	129										
37	128										
38	127										
39	126										
40	125										
41	124										
42	123										
43	122										
44	121										
45	120										

GRANULAR SOILS	
BLOWS/FT.	DENSITY
0-4	V.LOOSE
4-10	LOOSE
10-30	COMPACT
30-50	DENSE
>50	V.DENSE

COHESIVE SOILS	
BLOWS/FT.	CONSISTENCY
<2	V.SOFT
2-4	SOFT
4-8	FIRM
8-15	STIFF
15-30	V.STIFF
>30	HARD

SOIL COMPONENT

DESCRIPTIVE TERM	PROPORTION OF TOTAL
"TRACE"	0-10%
"SOME"	10-20%
"ADJECTIVE" (eg SANDY, SILTY)	20-35%
"AND"	35-50%

SOIL CONTAINING THREE COMPONENTS EACH OF WHICH COMPRISE AT LEAST 25% OF THE TOTAL ARE CLASSIFIED AS "A WELL-GRADED MIXTURE OF"

Notes:

Total Volatile Organic Compounds (TVOC) measured w/ PID Model:
TVOC Background: ppm
Weather:
Temperature:

McPHAIL ASSOCIATES, LLC
2269 MASSACHUSETTS AVENUE
CAMBRIDGE, MA 02140
TEL: 617-868-1420
FAX: 617-868-1423

Project:	Fuller Middle School	**Job #:**	6473
Location:	31 Flagg Drive	**Date Started:**	4-19-18
City/State:	Framingham, MA	**Date Finished:**	4-19-18

Boring No.

B-102

Contractor: Northern Drill Service, Inc.
Driller/Helper: Z. Nada/J. Stevens
Logged By/Reviewed By: C. Connors
Surface Elevation (ft): 164.9

Casing Type/Depth (ft): 4"
Casing Hammer (lbs)/Drop (in): 140lb/30"
Sampler Size/Type: 24" Split Spoon
Sampler Hammer (lbs)/Drop (in): 140lb/30"

Groundwater Observations

Date	Depth	Elev.	Notes

Depth (ft)	Elev. (ft)	Symbol	Depth/EL to Strata Change (ft)	Stratum	Sample TVOC (ppm)	N-Value / RQD	No.	Pen. /Rec. (in)	Depth (ft)	Blows/6" / Min/ft	Sample Description and Boring Notes
			0.5 / 164.4	TOPSOIL							
1	164			FILL	0.1	13	S1	24/20	0.0-2.0	2 6 7 10	Compact, brown to yellow/brown, SILTY SAND, trace gravel. (Fill)
2	163										
3	162				0.1	15	S2	24/18	2.0-4.0	8 8 7 5	Compact, yellow/brown to orange/brown, SILTY SAND, trace gravel. (Fill)
4	161										
5	160				0.0	5	S3	24/16	4.0-6.0	2 2 3 4	Compact, yellow/brown to orange/brown, SILTY SAND, trace gravel. (Fill)
6	159		6.0 / 158.9								
7	158			ALLUVIAL ORGANIC SILT DEPOSIT		5	S4	24/16	6.0-8.0	4 2 3 4	Loose, dark gray to gray, medium to coarse grain, SAND, trace to some organic silt. (Alluvial Organic Silt Deposit)
8	157		8.0 / 156.9								
9	156			LACUSTRINE	0.0	17	S5	24/12	8.0-10.0	4 9 8 8	Compact, light gray to gray, medium to coarse grain, SILTY SAND. (Lacustrine)
10	155										
11	154										
12	153										
13	152										
14	151										
15	150				0.1	13	S6	24/14	14.0-16.0	6 8 5 9	Compact, light brown, fine grain, SILTY SAND, trace clay and gravel. (Lacustrine)
16	149										
17	148										
18	147										
19	146										
20	145				0.0	13	S7	24/18	19.0-21.0	5 7 6 10	Compact, light brown, fine grain, SILTY SAND, trace clay and gravel. (Lacustrine)
21	144										
22	143										

GRANULAR SOILS	
BLOWS/FT.	DENSITY
0-4	V.LOOSE
4-10	LOOSE
10-30	COMPACT
30-50	DENSE
>50	V.DENSE

COHESIVE SOILS	
BLOWS/FT.	CONSISTENCY
<2	V.SOFT
2-4	SOFT
4-8	FIRM
8-15	STIFF
15-30	V.STIFF
>30	HARD

SOIL COMPONENT

DESCRIPTIVE TERM	PROPORTION OF TOTAL
"TRACE"	0-10%
"SOME"	10-20%
"ADJECTIVE" (eg SANDY, SILTY)	20-35%
"AND"	35-50%

SOIL CONTAINING THREE COMPONENTS EACH OF WHICH COMPRISE AT LEAST 25% OF THE TOTAL ARE CLASSIFIED AS "A WELL-GRADED MIXTURE OF"

Notes:

Total Volatile Organic Compounds (TVOC) measured w/ PID Model:
TVOC Background: ppm
Weather:
Temperature:

McPHAIL ASSOCIATES, LLC
2269 MASSACHUSETTS AVENUE
CAMBRIDGE, MA 02140
TEL: 617-868-1420
FAX: 617-868-1423

Project:	Fuller Middle School	**Job #:**	6473
Location:	31 Flagg Drive	**Date Started:**	4-19-18
City/State:	Framingham, MA	**Date Finished:**	4-19-18

Boring No.

B-102

Contractor: Northern Drill Service, Inc.
Driller/Helper: Z. Nada/J. Stevens
Logged By/Reviewed By: C. Connors
Surface Elevation (ft): 164.9

Casing Type/Depth (ft): 4"
Casing Hammer (lbs)/Drop (in): 140lb/30"
Sampler Size/Type: 24" Split Spoon
Sampler Hammer (lbs)/Drop (in): 140lb/30"

Groundwater Observations

Date	Depth	Elev.	Notes

Depth (ft)	Elev. (ft)	Symbol	Depth/EL to Strata Change (ft)	Stratum	Sample TVOC (ppm)	N-Value / RQD	No.	Pen. /Rec. (in)	Depth (ft)	Blows/6" / Min/ft	Sample Description and Boring Notes
24	141										
25	140			LACUSTRINE	0.0	28	S8	24/10	24.0-26.0	8 8 20 13	Compact, light brown, fine grain, SILTY SAND, trace gravel. (Lacustrine)
26	139		26.0 / 138.9								
				Bottom of borehole 26 feet below ground surface.							
27	138										
28	137										
29	136										
30	135										
31	134										
32	133										
33	132										
34	131										
35	130										
36	129										
37	128										
38	127										
39	126										
40	125										
41	124										
42	123										
43	122										
44	121										
45	120										

GRANULAR SOILS	
BLOWS/FT.	DENSITY
0-4	V.LOOSE
4-10	LOOSE
10-30	COMPACT
30-50	DENSE
>50	V.DENSE

COHESIVE SOILS	
BLOWS/FT.	CONSISTENCY
<2	V.SOFT
2-4	SOFT
4-8	FIRM
8-15	STIFF
15-30	V.STIFF
>30	HARD

SOIL COMPONENT

DESCRIPTIVE TERM	PROPORTION OF TOTAL
"TRACE"	0-10%
"SOME"	10-20%
"ADJECTIVE" (eg SANDY, SILTY)	20-35%
"AND"	35-50%

SOIL CONTAINING THREE COMPONENTS EACH OF WHICH COMPRISE AT LEAST 25% OF THE TOTAL ARE CLASSIFIED AS "A WELL-GRADED MIXTURE OF"

Notes:

Total Volatile Organic Compounds (TVOC) measured w/ PID Model:
TVOC Background: ppm
Weather:
Temperature:

McPHAIL ASSOCIATES, LLC
2269 MASSACHUSETTS AVENUE
CAMBRIDGE, MA 02140
TEL: 617-868-1420
FAX: 617-868-1423

Project:	Fuller Middle School	**Job #:**	6473
Location:	31 Flagg Drive	**Date Started:**	2-22-18
City/State:	Framingham, MA	**Date Finished:**	2-22-18

Boring No.

B-103

Contractor: Northern Drill Service, Inc.
Driller/Helper: Z. Nada/J. Stevens
Logged By/Reviewed By: T. Cormican
Surface Elevation (ft): 164.6

Casing Type/Depth (ft): 4"
Casing Hammer (lbs)/Drop (in): 140lb/30"
Sampler Size/Type: 24" Split Spoon
Sampler Hammer (lbs)/Drop (in): 140lb/30"

Groundwater Observations

Date	Depth	Elev.	Notes
2-22-18	6	158.6	

Depth (ft)	Elev. (ft)	Symbol	Depth/EL to Strata Change (ft)	Stratum	Sample TVOC (ppm)	N-Value / RQD	No.	Pen. /Rec. (in)	Depth (ft)	Blows/6" / Min/ft	Sample Description and Boring Notes
1	164		0.5 / 164.1	TOPSOIL		11	S1	24/16	0.0-2.0	3 3 8 10	Compact, brown to yellow/brown, SAND and GRAVEL, some silt. (Fill)
2	163										
3	162			FILL							
4	161										
5	160		5.0 / 159.6								
6	159			ALLUVIAL ORGANIC SILT DEPOSIT		20	S2	24/14	5.0-7.0	5 10 10 9	Compact, dark brown, PEATY SAND, trace gravel. (Alluvial Organic Silt Deposit)
7	158										
8	157					11	S3	24/18	7.0-9.0	8 5 6 5	Compact, dark brown, fine to medium grain, SAND, trace to some organic silt, to gray, fine to medium grain, SAND, trace silt. (Alluvial Organic Silt Deposit)
9	156		9.0 / 155.6								
10	155			GLACIAL OUTWASH		6	S4	24/14	9.0-11.0	2 3 3 6	Loose, gray, fine to medium grain, SAND, trace silt and gravel. (Glacial Outwash)
11	154										
12	153										
13	152										
14	151										
15	150					9	S5	24/12	14.0-16.0	14 6 3 4	Loose, gray, SAND and GRAVEL, trace silt. (Glacial Outwash)
16	149										
17	148										
18	147										
19	146										
20	145					16	S6	24/8	19.0-21.0	10 10 6 6	Compact, orange/brown, SAND and GRAVEL, trace silt, to light brown, SILTY SAND. (Glacial Outwash)
21	144										
22	143										
	142										

GRANULAR SOILS	
BLOWS/FT.	DENSITY
0-4	V.LOOSE
4-10	LOOSE
10-30	COMPACT
30-50	DENSE
>50	V.DENSE

COHESIVE SOILS	
BLOWS/FT.	CONSISTENCY
<2	V.SOFT
2-4	SOFT
4-8	FIRM
8-15	STIFF
15-30	V.STIFF
>30	HARD

SOIL COMPONENT

DESCRIPTIVE TERM	PROPORTION OF TOTAL
"TRACE"	0-10%
"SOME"	10-20%
"ADJECTIVE" (eg SANDY, SILTY)	20-35%
"AND"	35-50%

SOIL CONTAINING THREE COMPONENTS EACH OF WHICH COMPRISE AT LEAST 25% OF THE TOTAL ARE CLASSIFIED AS "A WELL-GRADED MIXTURE OF"

Notes:

Total Volatile Organic Compounds (TVOC) measured w/ PID Model:
TVOC Background: ppm
Weather:
Temperature:

McPHAIL ASSOCIATES, LLC
2269 MASSACHUSETTS AVENUE
CAMBRIDGE, MA 02140
TEL: 617-868-1420
FAX: 617-868-1423

Project:	Fuller Middle School	**Job #:**	6473
Location:	31 Flagg Drive	**Date Started:**	2-22-18
City/State:	Framingham, MA	**Date Finished:**	2-22-18

Boring No.

B-103

Contractor: Northern Drill Service, Inc.
Driller/Helper: Z. Nada/J. Stevens
Logged By/Reviewed By: T. Cormican
Surface Elevation (ft): 164.6

Casing Type/Depth (ft): 4"
Casing Hammer (lbs)/Drop (in): 140lb/30"
Sampler Size/Type: 24" Split Spoon
Sampler Hammer (lbs)/Drop (in): 140lb/30"

Groundwater Observations

Date	Depth	Elev.	Notes
2-22-18	6	158.6	

Depth (ft)	Elev. (ft)	Symbol	Depth/EL to Strata Change (ft)	Stratum	TVOC (ppm)	N-Value / RQD	No.	Pen. /Rec. (in)	Depth (ft)	Blows/6" / Min/ft	Sample Description and Boring Notes
24	141										
				GLACIAL OUTWASH		25	S7	6/5	24.0-24.5	4	Loose to compact, yellow/brown, fine to medium grain, SAND, trace silt and gravel. (Glacial Outwash)
25	140									10	
						25	S7A	18/16	24.5-26.0	15	Compact, gray/brown, stratified, fine grain, SANDY SILT, to fine grain, SAND, trace silt. (Glacial Outwash)
26	139		26.0 / 138.6							19	
27	138			Bottom of borehole 26 feet below ground surface.							
28	137										
29	136										
30	135										
31	134										
32	133										
33	132										
34	131										
35	130										
36	129										
37	128										
38	127										
39	126										
40	125										
41	124										
42	123										
43	122										
44	121										
45	120										
	119										

GRANULAR SOILS	
BLOWS/FT.	DENSITY
0-4	V.LOOSE
4-10	LOOSE
10-30	COMPACT
30-50	DENSE
>50	V.DENSE

COHESIVE SOILS	
BLOWS/FT.	CONSISTENCY
<2	V.SOFT
2-4	SOFT
4-8	FIRM
8-15	STIFF
15-30	V.STIFF
>30	HARD

SOIL COMPONENT

DESCRIPTIVE TERM	PROPORTION OF TOTAL
"TRACE"	0-10%
"SOME"	10-20%
"ADJECTIVE" (eg SANDY, SILTY)	20-35%
"AND"	35-50%

SOIL CONTAINING THREE COMPONENTS EACH OF WHICH COMPRISE AT LEAST 25% OF THE TOTAL ARE CLASSIFIED AS "A WELL-GRADED MIXTURE OF"

Notes:

Total Volatile Organic Compounds (TVOC) measured w/ PID Model:
TVOC Background: ppm
Weather:
Temperature:

McPHAIL ASSOCIATES, LLC
2269 MASSACHUSETTS AVENUE
CAMBRIDGE, MA 02140
TEL: 617-868-1420
FAX: 617-868-1423

Project:	Fuller Middle School	**Job #:**	6473
Location:	31 Flagg Drive	**Date Started:**	2-21-18
City/State:	Framingham, MA	**Date Finished:**	2-21-18

Boring No.

B-104

Contractor: Northern Drill Service, Inc.
Driller/Helper: Z. Nada/J. Stevens
Logged By/Reviewed By: T. Cormican
Surface Elevation (ft): 163.0

Casing Type/Depth (ft): 4"
Casing Hammer (lbs)/Drop (in): 140lb/30"
Sampler Size/Type: 24" Split Spoon
Sampler Hammer (lbs)/Drop (in): 140lb/30"

Groundwater Observations

Date	Depth	Elev.	Notes
2-21-18	4.5	158.5	

Depth (ft)	Elev. (ft)	Symbol	Depth/EL to Strata Change (ft)	Stratum	TVOC (ppm)	N-Value / RQD	No.	Pen. /Rec. (in)	Depth (ft)	Blows/6" / Min/ft	Sample Description and Boring Notes
			0.3 / 162.7	ASPHALT							
1	162			FILL		22	S1	18/10	0.5-2.0	8 11 11	Compact, brown, GRAVELLY SAND, trace silt. (Fill)
2	161		2.5 / 160.5			9	S2	6/6	2.0-2.5	11	Compact, brown SAND, some gravel, trace silt. (Fill)
3	160			ALLUVIAL ORGANIC SILT DEPOSIT		9	S2A	18/8	2.5-4.0	5 4 5	Loose, light gray, stratified, SAND, w/ seams of dark brown organic silt. (Alluvial Organic Silt Deposit)
4	159										
5	158					4	S3	24/12	4.0-6.0	3 2 2 4	Very loose to loose, gray, fine to medium grain, SAND, trace silt, w/ pockets of organic silt. (Alluvial Organic Silt Deposit)
6	157										
7	156										
8	155		8.0 / 155.0								
9	154			GLACIAL OUTWASH							
10	153					10	S4	24/16	9.0-11.0	3 4 6 6	Loose to compact, stratified, light gray to brown, fine to medium grain, SAND, trace silt. (Glacial Outwash)
11	152										
12	151										
13	150										
14	149										
15	148					5	S5	24/16	14.0-16.0	2 2 3 4	Loose, brown, fine to medium grain, SAND, trace silt. (Glacial Outwash)
16	147										
17	146										
18	145										
19	144										
20	143					9	S6	24/12	19.0-21.0	2 4 5 5	Loose, brown, fine to medium grain, SAND, trace silt, to SAND and GRAVEL. (Glacial Outwash)
21	142										
22	141										

GRANULAR SOILS	
BLOWS/FT.	DENSITY
0-4	V.LOOSE
4-10	LOOSE
10-30	COMPACT
30-50	DENSE
>50	V.DENSE

COHESIVE SOILS	
BLOWS/FT.	CONSISTENCY
<2	V.SOFT
2-4	SOFT
4-8	FIRM
8-15	STIFF
15-30	V.STIFF
>30	HARD

SOIL COMPONENT

DESCRIPTIVE TERM	PROPORTION OF TOTAL
"TRACE"	0-10%
"SOME"	10-20%
"ADJECTIVE" (eg SANDY, SILTY)	20-35%
"AND"	35-50%

SOIL CONTAINING THREE COMPONENTS EACH OF WHICH COMPRISE AT LEAST 25% OF THE TOTAL ARE CLASSIFIED AS "A WELL-GRADED MIXTURE OF"

Notes:

Total Volatile Organic Compounds (TVOC) measured w/ PID Model:
TVOC Background: ppm
Weather:
Temperature:

McPHAIL ASSOCIATES, LLC
2269 MASSACHUSETTS AVENUE
CAMBRIDGE, MA 02140
TEL: 617-868-1420
FAX: 617-868-1423

Project:	Fuller Middle School	**Job #:**	6473
Location:	31 Flagg Drive	**Date Started:**	2-21-18
City/State:	Framingham, MA	**Date Finished:**	2-21-18

Boring No.

B-104

Contractor: Northern Drill Service, Inc.
Driller/Helper: Z. Nada/J. Stevens
Logged By/Reviewed By: T. Cormican
Surface Elevation (ft): 163.0

Casing Type/Depth (ft): 4"
Casing Hammer (lbs)/Drop (in): 140lb/30"
Sampler Size/Type: 24" Split Spoon
Sampler Hammer (lbs)/Drop (in): 140lb/30"

Groundwater Observations

Date	Depth	Elev.	Notes
2-21-18	4.5	158.5	

Depth (ft)	Elev. (ft)	Symbol	Depth/EL to Strata Change (ft)	Stratum	TVOC (ppm)	N-Value / RQD	No.	Pen. /Rec. (in)	Depth (ft)	Blows/6" / Min/ft	Sample Description and Boring Notes
24	139										
25	138					29	S7	24/12	24.0-26.0	12 12 17 16	Compact, gray/brown to orange/brown, SAND and GRAVEL, some silt. (Glacial Outwash)
26	137										
27	136			GLACIAL OUTWASH							
28	135										
29	134										
30	133					34	S8	24/8	29.0-31.0	8 19 15 12	Dense, gray/brown, SAND and GRAVEL, to light gray/brown, SILTY SAND and GRAVEL. (Glacial Outwash)
31	132		31.0 / 132.0								
32	131			Bottom of borehole 31 feet below ground surface.							
33	130										
34	129										
35	128										
36	127										
37	126										
38	125										
39	124										
40	123										
41	122										
42	121										
43	120										
44	119										
45	118										

GRANULAR SOILS	
BLOWS/FT.	DENSITY
0-4	V.LOOSE
4-10	LOOSE
10-30	COMPACT
30-50	DENSE
>50	V.DENSE

COHESIVE SOILS	
BLOWS/FT.	CONSISTENCY
<2	V.SOFT
2-4	SOFT
4-8	FIRM
8-15	STIFF
15-30	V.STIFF
>30	HARD

SOIL COMPONENT

DESCRIPTIVE TERM	PROPORTION OF TOTAL
"TRACE"	0-10%
"SOME"	10-20%
"ADJECTIVE" (eg SANDY, SILTY)	20-35%
"AND"	35-50%

SOIL CONTAINING THREE COMPONENTS EACH OF WHICH COMPRISE AT LEAST 25% OF THE TOTAL ARE CLASSIFIED AS "A WELL-GRADED MIXTURE OF"

Notes:

Total Volatile Organic Compounds (TVOC) measured w/ PID Model:
TVOC Background: ppm
Weather:
Temperature:

McPHAIL ASSOCIATES, LLC
2269 MASSACHUSETTS AVENUE
CAMBRIDGE, MA 02140
TEL: 617-868-1420
FAX: 617-868-1423

Project:	Fuller Middle School	**Job #:**	6473
Location:	31 Flagg Drive	**Date Started:**	4-19-18
City/State:	Framingham, MA	**Date Finished:**	4-19-18

Boring No.

B-105

Contractor: Northern Drill Service, Inc.
Driller/Helper: Z. Nada/J. Stevens
Logged By/Reviewed By: C. Connors
Surface Elevation (ft): 163.4

Casing Type/Depth (ft): 4"
Casing Hammer (lbs)/Drop (in): 140lb/30"
Sampler Size/Type: 24" Split Spoon
Sampler Hammer (lbs)/Drop (in): 140lb/30"

Groundwater Observations

Date	Depth	Elev.	Notes

Depth (ft)	Elev. (ft)	Symbol	Depth/EL to Strata Change (ft)	Stratum	TVOC (ppm)	N-Value / RQD	No.	Pen. /Rec. (in)	Depth (ft)	Blows/6" / Min/ft	Sample Description and Boring Notes
	163		0.5 / 162.9	ASPHALT							
1	162			FILL	0.1	8	S1	18/6	0.5-2.0	3 4 4	Loose, dark gray to dark brown, well graded mixture of SILT, SAND and GRAVEL, w/ asphalt. (Fill)
2 3	161 160		4.0 / 159.4		0.2	8	S2	24/12	2.0-4.0	3 6 2 9	Loose, dark gray, SAND and GRAVEL, tarce silt. (Fill)
4 5	159 158			GLACIAL OUTWASH	0.1	13	S3	24/12	4.0-6.0	4 6 7 6	Compact, gray to brown, coarse grain, SAND, trace silt and gravel. (Glacial Outwash)
6 7	157 156				0.1	8	S4	24/16	6.0-8.0	6 4 4 7	Loose, gray, coarse grain, SAND, trace silt and gravel. (Glacial Outwash)
8 9	155 154				0.1	8	S5	24/6	8.0-10.0	3 4 4 5	Loose, light brown to orange/brown, cparse grain, SAND, trace silt and gravel. (Glacial Outwash)
10 11 12 13	153 152 151 150										
14 15	149 148				0.1	5	S6	24/3	14.0-16.0	2 2 3 6	Loose, light brown to orange/brown, coarse grain, SAND, trace silt and gravel. (Glacial Outwash)
16 17 18	147 146 145										
19 20	144 143				0.0	11	S7	24/10	19.0-21.0	3 4 7 10	Compact, light brown, coarse grain, GRAVELY SAND, trace silt. (Glacial Outwash)
21 22	142 141										

GRANULAR SOILS	
BLOWS/FT.	DENSITY
0-4	V.LOOSE
4-10	LOOSE
10-30	COMPACT
30-50	DENSE
>50	V.DENSE

COHESIVE SOILS	
BLOWS/FT.	CONSISTENCY
<2	V.SOFT
2-4	SOFT
4-8	FIRM
8-15	STIFF
15-30	V.STIFF
>30	HARD

SOIL COMPONENT

DESCRIPTIVE TERM	PROPORTION OF TOTAL
"TRACE"	0-10%
"SOME"	10-20%
"ADJECTIVE" (eg SANDY, SILTY)	20-35%
"AND"	35-50%

SOIL CONTAINING THREE COMPONENTS EACH OF WHICH COMPRISE AT LEAST 25% OF THE TOTAL ARE CLASSIFIED AS "A WELL-GRADED MIXTURE OF"

Notes:

Total Volatile Organic Compounds (TVOC) measured w/ PID Model:
TVOC Background: ppm
Weather:
Temperature:

McPHAIL ASSOCIATES, LLC
2269 MASSACHUSETTS AVENUE
CAMBRIDGE, MA 02140
TEL: 617-868-1420
FAX: 617-868-1423

Project:	Fuller Middle School	**Job #:**	6473
Location:	31 Flagg Drive	**Date Started:**	4-19-18
City/State:	Framingham, MA	**Date Finished:**	4-19-18

Boring No.

B-105

Contractor: Northern Drill Service, Inc.
Driller/Helper: Z. Nada/J. Stevens
Logged By/Reviewed By: C. Connors
Surface Elevation (ft): 163.4

Casing Type/Depth (ft): 4"
Casing Hammer (lbs)/Drop (in): 140lb/30"
Sampler Size/Type: 24" Split Spoon
Sampler Hammer (lbs)/Drop (in): 140lb/30"

Groundwater Observations

Date	Depth	Elev.	Notes

Depth (ft)	Elev. (ft)	Symbol	Depth/EL to Strata Change (ft)	Stratum	Sample TVOC (ppm)	N-Value / RQD	No.	Pen. /Rec. (in)	Depth (ft)	Blows/6" / Min/ft	Sample Description and Boring Notes
	140										
24	139				0.0	8	S8	24/6	24.0-26.0	8 4 4 5	Loose, light brown, fine to medium grain, SILTY SAND. (Glacial Outwash)
25	138										
26	137										
27	136			GLACIAL OUTWASH							
28	135										
29	134					10	S9	24/6	29.0-31.0	7 6 4 8	Loose to compact, brown to dark brown, coarse grain, SAND and GRAVEL, trace silt. (Glacial Outwash)
30	133		31.0 / 132.4								
31	132			Bottom of borehole 31 feet below ground surface.							
32	131										
33	130										
34	129										
35	128										
36	127										
37	126										
38	125										
39	124										
40	123										
41	122										
42	121										
43	120										
44	119										
45	118										

GRANULAR SOILS	
BLOWS/FT.	DENSITY
0-4	V.LOOSE
4-10	LOOSE
10-30	COMPACT
30-50	DENSE
>50	V.DENSE

COHESIVE SOILS	
BLOWS/FT.	CONSISTENCY
<2	V.SOFT
2-4	SOFT
4-8	FIRM
8-15	STIFF
15-30	V.STIFF
>30	HARD

SOIL COMPONENT

DESCRIPTIVE TERM	PROPORTION OF TOTAL
"TRACE"	0-10%
"SOME"	10-20%
"ADJECTIVE" (eg SANDY, SILTY)	20-35%
"AND"	35-50%

SOIL CONTAINING THREE COMPONENTS EACH OF WHICH COMPRISE AT LEAST 25% OF THE TOTAL ARE CLASSIFIED AS "A WELL-GRADED MIXTURE OF"

Notes:

Total Volatile Organic Compounds (TVOC) measured w/ PID Model:
TVOC Background: ppm
Weather:
Temperature:

McPHAIL ASSOCIATES, LLC
2269 MASSACHUSETTS AVENUE
CAMBRIDGE, MA 02140
TEL: 617-868-1420
FAX: 617-868-1423

Project:	Fuller Middle School	**Job #:**	6473
Location:	31 Flagg Drive	**Date Started:**	2-21-18
City/State:	Framingham, MA	**Date Finished:**	2-21-18

Boring No.

B-106

Contractor: Northern Drill Service, Inc.
Driller/Helper: Z. Nada/J. Stevens
Logged By/Reviewed By: T. Cormican
Surface Elevation (ft): 165.0

Casing Type/Depth (ft): 4"
Casing Hammer (lbs)/Drop (in): 140lb/30"
Sampler Size/Type: 24" Split Spoon
Sampler Hammer (lbs)/Drop (in): 140lb/30"

Groundwater Observations

Date	Depth	Elev.	Notes
2-21-18	6	159.0	

Depth (ft)	Elev. (ft)	Symbol	Depth/EL to Strata Change (ft)	Stratum	Sample TVOC (ppm)	N-Value / RQD	No.	Pen. /Rec. (in)	Depth (ft)	Blows/6" / Min/ft	Sample Description and Boring Notes
			0.3 / 164.7	ASPHALT							
1	164			FILL		34	S1	24/16	0.5-2.5	31 16 18 38	Dense, gray/brown, SAND and GRAVEL, some silt. (Fill) Drilled through cobbles from 5 to 8 feet below ground surface and casing refusal at 8 feet below ground surface. Moved borehole 4 feet to the south.
2	163										
3	162										
4	161		4.5 / 160.5								
5	160			GLACIAL OUTWASH							
6	159										
7	158										
8	157		8.0 / 157.0	Bottom of borehole 8 feet below ground surface.							
9	156										
10	155										
11	154										
12	153										
13	152										
14	151										
15	150										
16	149										
17	148										
18	147										
19	146										
20	145										
21	144										
22	143										

GRANULAR SOILS	
BLOWS/FT.	DENSITY
0-4	V.LOOSE
4-10	LOOSE
10-30	COMPACT
30-50	DENSE
>50	V.DENSE

COHESIVE SOILS	
BLOWS/FT.	CONSISTENCY
<2	V.SOFT
2-4	SOFT
4-8	FIRM
8-15	STIFF
15-30	V.STIFF
>30	HARD

SOIL COMPONENT

DESCRIPTIVE TERM	PROPORTION OF TOTAL
"TRACE"	0-10%
"SOME"	10-20%
"ADJECTIVE" (eg SANDY, SILTY)	20-35%
"AND"	35-50%

SOIL CONTAINING THREE COMPONENTS EACH OF WHICH COMPRISE AT LEAST 25% OF THE TOTAL ARE CLASSIFIED AS "A WELL-GRADED MIXTURE OF"

Notes:

Total Volatile Organic Compounds (TVOC) measured w/ PID Model:
TVOC Background: ppm
Weather:
Temperature:

McPHAIL ASSOCIATES, LLC
2269 MASSACHUSETTS AVENUE
CAMBRIDGE, MA 02140
TEL: 617-868-1420
FAX: 617-868-1423

Project:	Fuller Middle School	**Job #:**	6473
Location:	31 Flagg Drive	**Date Started:**	2-21-18
City/State:	Framingham, MA	**Date Finished:**	2-22-18

Boring No.

B-106A

Contractor: Northern Drill Service, Inc.
Driller/Helper: Z. Nada/J. Stevens
Logged By/Reviewed By: T. Cormican
Surface Elevation (ft): 165.0

Casing Type/Depth (ft): 4"
Casing Hammer (lbs)/Drop (in): 140lb/30"
Sampler Size/Type: 24" Split Spoon
Sampler Hammer (lbs)/Drop (in): 140lb/30"

Groundwater Observations

Date	Depth	Elev.	Notes
2-22-18	6	159.0	

Depth (ft)	Elev. (ft)	Symbol	Depth/EL to Strata Change (ft)	Stratum	Sample TVOC (ppm)	N-Value / RQD	No.	Pen. /Rec. (in)	Depth (ft)	Blows/6" / Min/ft	Sample Description and Boring Notes
			0.3 / 164.7	ASPHALT							
1	164										
2	163			FILL							
3	162										
4	161		4.5 / 160.5			49	S2	6/4	4.0-4.5	6	Loose to compact, gray/brown, SAND and GRAVEL, some silt. (Fill)
5	160			GLACIAL OUTWASH		49	S2A	18/6	4.5-6.0	15 34 28	Dense, yellow/brown to orange/brown, SAND and GRAVEL, trace silt. (Glacial Outwash)
6	159										
7	158										
8	157										
9	156										
10	155					47	S3	24/12	9.0-11.0	22 25 22 12	Dense, light gray, SILTY SAND and GRAVEL, to brown, SAND and GRAVEL, trace to some silt. (Glacial Outwash)
11	154										
12	153										
13	152										
14	151										
15	150					29	s4	24/16	14.0-16.0	12 19 10 8	Compact, brown, SAND and GRAVEL, trace to some silt. (Glacial Outwash)
16	149		16.0 / 149.0								
17	148			Bottom of borehole 16 feet below ground surface.							
18	147										
19	146										
20	145										
21	144										
22	143										

GRANULAR SOILS	
BLOWS/FT.	DENSITY
0-4	V.LOOSE
4-10	LOOSE
10-30	COMPACT
30-50	DENSE
>50	V.DENSE

COHESIVE SOILS	
BLOWS/FT.	CONSISTENCY
<2	V.SOFT
2-4	SOFT
4-8	FIRM
8-15	STIFF
15-30	V.STIFF
>30	HARD

SOIL COMPONENT

DESCRIPTIVE TERM	PROPORTION OF TOTAL
"TRACE"	0-10%
"SOME"	10-20%
"ADJECTIVE" (eg SANDY, SILTY)	20-35%
"AND"	35-50%

SOIL CONTAINING THREE COMPONENTS EACH OF WHICH COMPRISE AT LEAST 25% OF THE TOTAL ARE CLASSIFIED AS "A WELL-GRADED MIXTURE OF"

Notes:

Total Volatile Organic Compounds (TVOC) measured w/ PID Model:
TVOC Background: ppm
Weather:
Temperature:

McPHAIL ASSOCIATES, LLC
2269 MASSACHUSETTS AVENUE
CAMBRIDGE, MA 02140
TEL: 617-868-1420
FAX: 617-868-1423

Project:	Fuller Middle School	**Job #:**	6473
Location:	31 Flagg Drive	**Date Started:**	2-21-18
City/State:	Framingham, MA	**Date Finished:**	2-21-18

Boring No.

B-107

Contractor: Northern Drill Service, Inc.
Driller/Helper: Z. Nada/J. Stevens
Logged By/Reviewed By: T. Cormican
Surface Elevation (ft): 162.9

Casing Type/Depth (ft): 4"
Casing Hammer (lbs)/Drop (in): 140lb/30"
Sampler Size/Type: 24" Split Spoon
Sampler Hammer (lbs)/Drop (in): 140lb/30"

Groundwater Observations

Date	Depth	Elev.	Notes
2-21-18	4	158.9	

Depth (ft)	Elev. (ft)	Symbol	Depth/EL to Strata Change (ft)	Stratum	TVOC (ppm)	N-Value / RQD	No.	Pen. /Rec. (in)	Depth (ft)	Blows/6" / Min/ft	Sample Description and Boring Notes
			0.3 / 162.6	ASPHALT							
1	162			FILL		20	S1	24/12	0.5-2.5	26 11 9 12	Compact, brown, GRAVELLY SAND, trace silt. (Fill)
2	161										
3	160										
4	159		4.0 / 158.9								
5	158			ALLUVIAL ORGANIC SILT DEPOSIT		5	S2	24/14	4.0-6.0	2 2 3 5	Loose, interbedded, gray, SAND and brown to dark brown, ORGANIC SILT, some peat. (Alluvial Organic Silt Deposit)
6	157										
7	156										
8	155		8.0 / 154.9								
9	154			LACUSTRINE DEPOSIT							
10	153					11	S3	24/16	9.0-11.0	5 6 5 6	Compact, light gray, fine grain, SANDY SILT, to fine grain SILTY SAND. (Lacustrine Deposit)
11	152										
12	151										
13	150										
14	149		14.5 / 148.4			34	S4	6/6	14.0-14.5	8	Loose to compact, light gray, fine grain, SAND, trace silt, to brown, fine to medium grain, SAND, trace silt. (Lacustrine Deposit)
15	148			GLACIAL OUTWASH		34	S4A	18/14	14.5-16.0	18 16 7	Dense, gray/brown to orange/brown, SAND and GRAVEL, trace silt. (Glacial Outwash)
16	147										
17	146										
18	145										
19	144										
20	143					35	S5	24/12	19.0-21.0	11 19 16 15	Dense, gray/brown, SAND and GRAVEL, trace silt. (Glacial Outwash)
21	142		21.0 / 141.9								
22	141			Bottom of borehole 21 feet below ground surface.							

GRANULAR SOILS	
BLOWS/FT.	DENSITY
0-4	V.LOOSE
4-10	LOOSE
10-30	COMPACT
30-50	DENSE
>50	V.DENSE

COHESIVE SOILS	
BLOWS/FT.	CONSISTENCY
<2	V.SOFT
2-4	SOFT
4-8	FIRM
8-15	STIFF
15-30	V.STIFF
>30	HARD

SOIL COMPONENT

DESCRIPTIVE TERM	PROPORTION OF TOTAL
"TRACE"	0-10%
"SOME"	10-20%
"ADJECTIVE" (eg SANDY, SILTY)	20-35%
"AND"	35-50%

SOIL CONTAINING THREE COMPONENTS EACH OF WHICH COMPRISE AT LEAST 25% OF THE TOTAL ARE CLASSIFIED AS "A WELL-GRADED MIXTURE OF"

Notes:

Total Volatile Organic Compounds (TVOC) measured w/ PID Model:
TVOC Background: ppm
Weather:
Temperature:

McPHAIL ASSOCIATES, LLC
2269 MASSACHUSETTS AVENUE
CAMBRIDGE, MA 02140
TEL: 617-868-1420
FAX: 617-868-1423

Project:	Fuller Middle School	**Job #:**	6473
Location:	31 Flagg Drive	**Date Started:**	2-22-18
City/State:	Framingham, MA	**Date Finished:**	2-22-18

Boring No.

B-108

Contractor: Northern Drill Service, Inc.
Driller/Helper: Z. Nada/J. Stevens
Logged By/Reviewed By: T. Cormican
Surface Elevation (ft): 163.9

Casing Type/Depth (ft): 4"
Casing Hammer (lbs)/Drop (in): 140lb/30"
Sampler Size/Type: 24" Split Spoon
Sampler Hammer (lbs)/Drop (in): 140lb/30"

Groundwater Observations

Date	Depth	Elev.	Notes
2-22-18	3	160.9	

Depth (ft)	Elev. (ft)	Symbol	Depth/EL to Strata Change (ft)	Stratum	TVOC (ppm)	N-Value / RQD	No.	Pen. /Rec. (in)	Depth (ft)	Blows/6" / Min/ft	Sample Description and Boring Notes
			0.3 / 163.6	ASPHALT							
1	163			FILL		32	S1	24/15	0.5-2.5	14 11 21 19	Dense, dark gray/black, SILTY SAND and GRAVEL. (Fill)
2	162										
3	161										
4	160					37	S2	12/8	4.0-5.0	13 19	Dense, dark gray/brown, SILTY SAND and GRAVEL. (Fill)
5	159		5.0 / 158.9	GLACIAL OUTWASH		37	S2A	12/8	5.0-6.0	18 16	Dense, light gray, fine to medium grain, SAND, trace silt. (Glacial Outwash)
6	158										
7	157										
8	156										
9	155										
10	154					32	S3	24/13	9.0-11.0	15 17 15 18	Dense, brown, SAND and GRAVEL, trace silt. (Glacial Outwash)
11	153		11.0 / 152.9	Bottom of borehole 11 feet below ground surface.							
12	152										
13	151										
14	150										
15	149										
16	148										
17	147										
18	146										
19	145										
20	144										
21	143										
22	142										

GRANULAR SOILS	
BLOWS/FT.	DENSITY
0-4	V.LOOSE
4-10	LOOSE
10-30	COMPACT
30-50	DENSE
>50	V.DENSE

COHESIVE SOILS	
BLOWS/FT.	CONSISTENCY
<2	V.SOFT
2-4	SOFT
4-8	FIRM
8-15	STIFF
15-30	V.STIFF
>30	HARD

SOIL COMPONENT

DESCRIPTIVE TERM	PROPORTION OF TOTAL
"TRACE"	0-10%
"SOME"	10-20%
"ADJECTIVE" (eg SANDY, SILTY)	20-35%
"AND"	35-50%

SOIL CONTAINING THREE COMPONENTS EACH OF WHICH COMPRISE AT LEAST 25% OF THE TOTAL ARE CLASSIFIED AS "A WELL-GRADED MIXTURE OF"

Notes:

Total Volatile Organic Compounds (TVOC) measured w/ PID Model:
TVOC Background: ppm
Weather:
Temperature:

McPHAIL ASSOCIATES, LLC
2269 MASSACHUSETTS AVENUE
CAMBRIDGE, MA 02140
TEL: 617-868-1420
FAX: 617-868-1423

Project:	Fuller Middle School	**Job #:**	6473
Location:	31 Flagg Drive	**Date Started:**	2-22-18
City/State:	Framingham, MA	**Date Finished:**	2-22-18

Boring No.

B-109

Contractor: Northern Drill Service, Inc.
Driller/Helper: Z. Nada/J. Stevens
Logged By/Reviewed By: T. Cormican
Surface Elevation (ft): 163.5

Casing Type/Depth (ft): 4"
Casing Hammer (lbs)/Drop (in): 140lb/30"
Sampler Size/Type: 24" Split Spoon
Sampler Hammer (lbs)/Drop (in): 140lb/30"

Groundwater Observations

Date	Depth	Elev.	Notes
2-22-18	4.5	159.0	

Depth (ft)	Elev. (ft)	Symbol	Depth/EL to Strata Change (ft)	Stratum	Sample TVOC (ppm)	N-Value / RQD	No.	Pen. /Rec. (in)	Depth (ft)	Blows/6" / Min/ft	Sample Description and Boring Notes
1	163		0.1 / 163.4	ASPHALT		61	S1	24/13	0.0-2.0	10 18 43 29	Very dense, dark brown, SILTY SAND and CRUSHED CONCRETE. (Fill)
2	162										
3	161			FILL							
4	160										
5	159					32	S2	24/8	4.0-6.0	13 15 17 14	Dense, gray/brown, SAND and GRAVEL, trace silt. (Fill)
6	158										
7	157		6.5 / 157.0								
8	156										
9	155										
10	154					19	S3	24/14	9.0-11.0	8 9 10 19	Compact, brown to gray/brown, SAND and GRAVEL, trace silt. (Glacial Outwash)
11	153										
12	152			GLACIAL OUTWASH							
13	151										
14	150										
15	149					49	S4	24/10	14.0-16.0	12 17 32 27	Dense, gray/brown, SAND and GRAVEL, trace to some silt. (Glacial Outwash)
16	148		16.0 / 147.5								
17	147			Bottom of borehole 16 feet below ground surface.							
18	146										
19	145										
20	144										
21	143										
22	142										
	141										

GRANULAR SOILS	
BLOWS/FT.	DENSITY
0-4	V.LOOSE
4-10	LOOSE
10-30	COMPACT
30-50	DENSE
>50	V.DENSE

COHESIVE SOILS	
BLOWS/FT.	CONSISTENCY
<2	V.SOFT
2-4	SOFT
4-8	FIRM
8-15	STIFF
15-30	V.STIFF
>30	HARD

SOIL COMPONENT

DESCRIPTIVE TERM	PROPORTION OF TOTAL
"TRACE"	0-10%
"SOME"	10-20%
"ADJECTIVE" (eg SANDY, SILTY)	20-35%
"AND"	35-50%

SOIL CONTAINING THREE COMPONENTS EACH OF WHICH COMPRISE AT LEAST 25% OF THE TOTAL ARE CLASSIFIED AS "A WELL-GRADED MIXTURE OF"

Notes:

Total Volatile Organic Compounds (TVOC) measured w/ PID Model:
TVOC Background: ppm
Weather:
Temperature:

McPHAIL ASSOCIATES, LLC
2269 MASSACHUSETTS AVENUE
CAMBRIDGE, MA 02140
TEL: 617-868-1420
FAX: 617-868-1423

CARR-DEE CORP.

37 LINDEN STREET MEDFORD, MA 02155-0001 Telephone (781) 391-4500

To: MCPHAIL ASSOC., LLC, 2269 MASS. AVE., CAMBRIDGE, MA Date: 7-30-2018 Job No.: 2018-146

Location: FULLER MIDDLE SCHOOL, 31 FLAGG DRIVE, FRAMINGHAM, MA Scale: 1 in.= 3 ft.

GROUND SURFACE +164.3

BORING 201

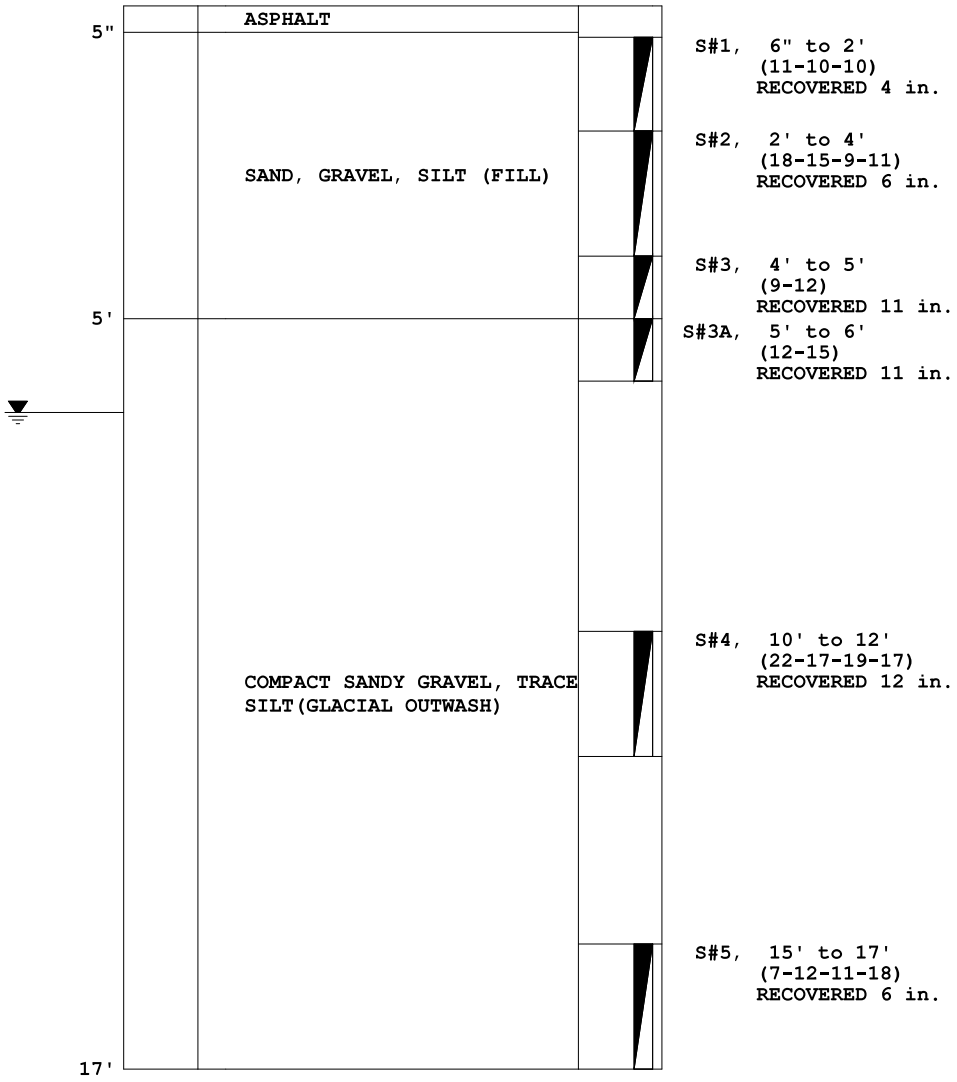

WATER LEVEL 6'6"
SIZE OF CASING: NW, LENGTH: 15'0"
DRILLER: G. SMITH, INSPECTOR: J. CRONIN
DATE STARTED & COMPLETED: 7-26-2018

All samples have been visually classified by . Unless otherwise specified, water levels noted were observed at completion of borings, and do not necessarily represent permanent ground water levels. Figures in parenthesis indicate the number of blows required to drive Two-inch Split Sampler 6 inches using 140 lb. weight falling 30 inches(±). Figures in column to left (if noted) indicate number of blows to drive casing one foot, using 300 lb. weight falling 24 inches (±).

CARR-DEE CORP.

37 LINDEN STREET MEDFORD, MA 02155-0001 Telephone (781) 391-4500

To: MCPHAIL ASSOC., LLC, 2269 MASS. AVE., CAMBRIDGE, MA Date: 7-30-2018 Job No.: 2018-146

Location: FULLER MIDDLE SCHOOL, 31 FLAGG DRIVE, FRAMINGHAM, MA Scale: 1 in.= 3 ft.

GROUND SURFACE +162.1

BORING 202

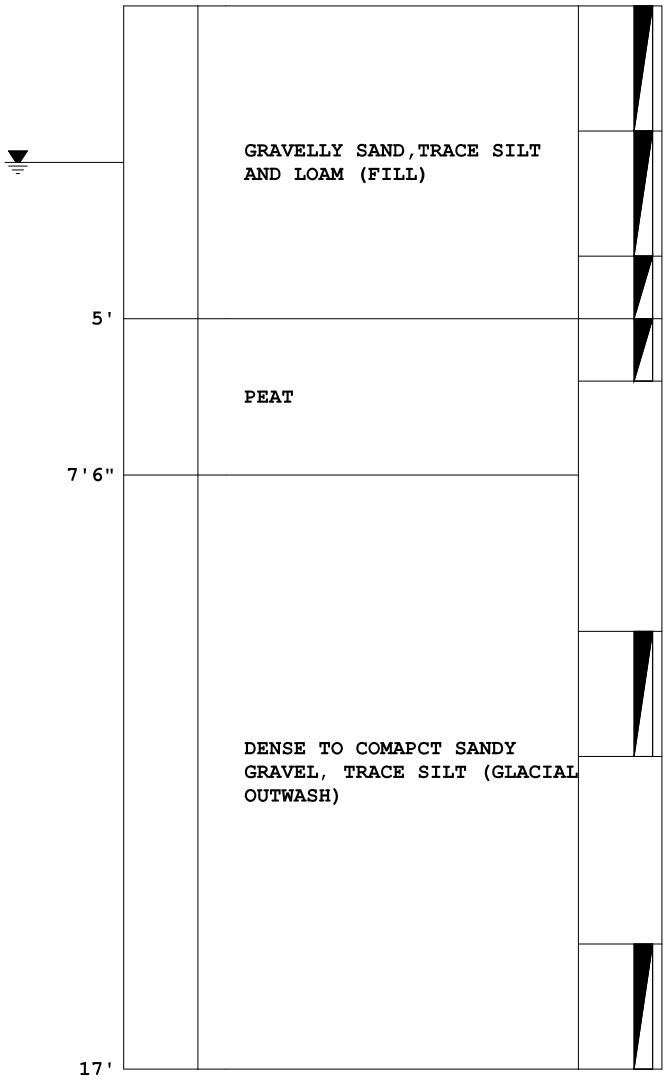

S#1, 0' to 2' (7-5-17-31) RECOVERED 14 in.

S#2, 2' to 4' (33-26-21-6) RECOVERED 4 in.

S#3, 4' to 5' (3-1) RECOVERED 12 in.

S#3A, 5' to 6' (1-1) RECOVERED 12 in.

S#4, 10' to 12' (12-21-15-14) RECOVERED 12 in.

S#5, 15' to 17' (23-14-12-14) RECOVERED 5 in.

WATER LEVEL 2'6"
SIZE OF CASING: NW, LENGTH: 15'0"
DRILLER: G. SMITH, INSPECTOR: J. CRONIN
DATE STARTED & COMPLETED: 7-27-2018

All samples have been visually classified by . Unless otherwise specified, water levels noted were observed at completion of borings, and do not necessarily represent permanent ground water levels. Figures in parenthesis indicate the number of blows required to drive Two-inch Split Sampler 6 inches using 140 lb. weight falling 30 inches(±). Figures in column to left (if noted) indicate number of blows to drive casing one foot, using 300 lb. weight falling 24 inches (±).

CARR-DEE CORP.

37 LINDEN STREET MEDFORD, MA 02155-0001 Telephone (781) 391-4500

To: MCPHAIL ASSOC., LLC, 2269 MASS. AVE., CAMBRIDGE, MA Date: 7-30-2018 Job No.: 2018-146

Location: FULLER MIDDLE SCHOOL, 31 FLAGG DRIVE, FRAMINGHAM, MA Scale: 1 in.= 3 ft.

GROUND SURFACE +164

BORING 203

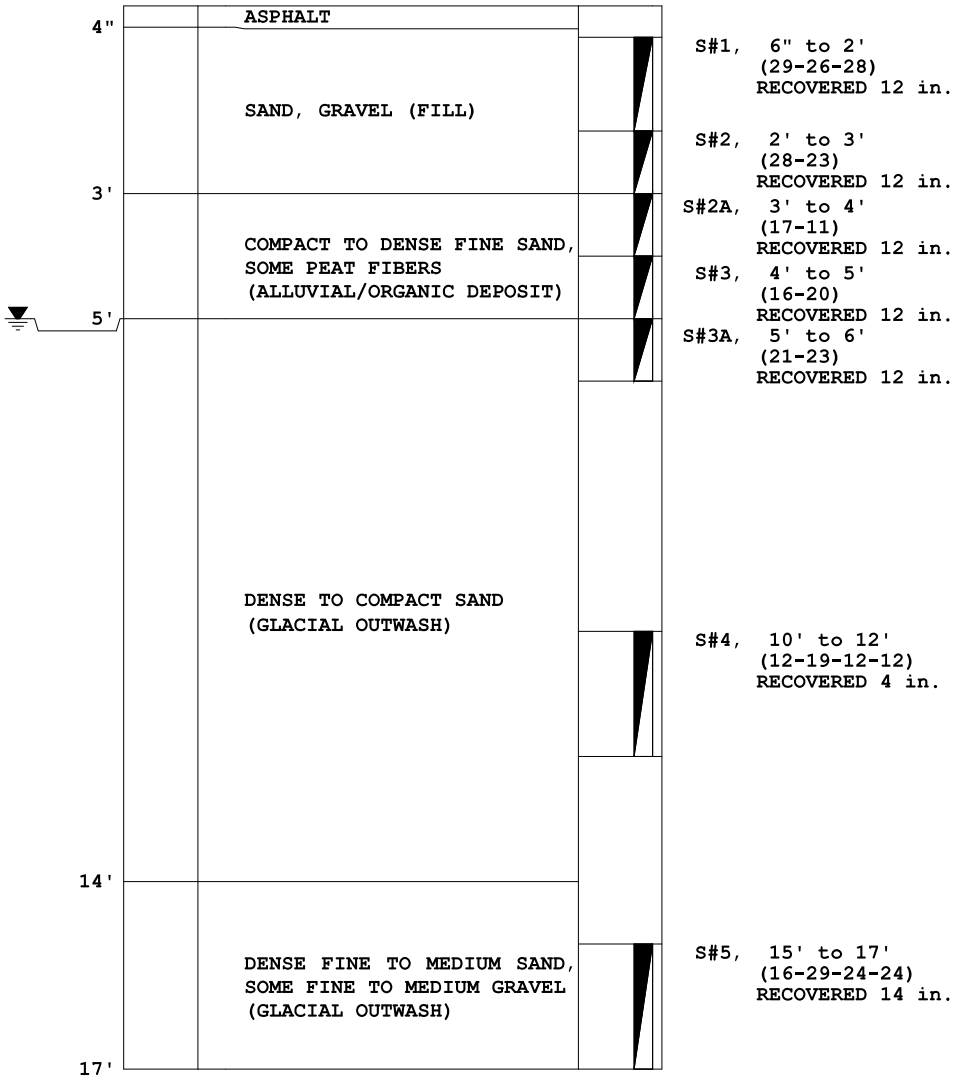

WATER LEVEL 5'
SIZE OF CASING: NW, LENGTH: 15'0"
DRILLER: G. SMITH, INSPECTOR: J. CRONIN
DATE STARTED & COMPLETED: 7-26-2018

All samples have been visually classified by . Unless otherwise specified, water levels noted were observed at completion of borings, and do not necessarily represent permanent ground water levels. Figures in parenthesis indicate the number of blows required to drive Two-inch Split Sampler 6 inches using 140 lb. weight falling 30 inches(±). Figures in column to left (if noted) indicate number of blows to drive casing one foot, using 300 lb. weight falling 24 inches (±).

CARR-DEE CORP.

37 LINDEN STREET MEDFORD, MA 02155-0001 Telephone (781) 391-4500

To: MCPHAIL ASSOC., LLC, 2269 MASS. AVE., CAMBRIDGE, MA Date: 7-30-2018 Job No.: 2018-146

Location: FULLER MIDDLE SCHOOL, 31 FLAGG DRIVE, FRAMINGHAM, MA Scale: 1 in.= 3 ft.

GROUND SURFACE +162.5

BORING 204

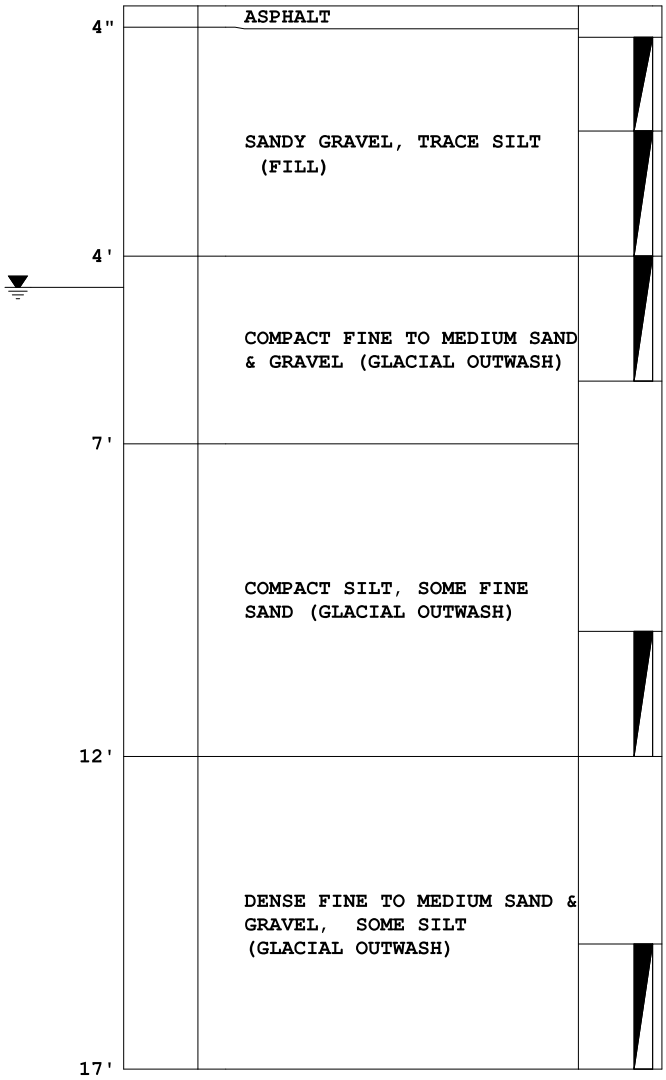

S#1, 6" to 2' (33-25-33) RECOVERED 7 in.

S#2, 2' to 4' (21-17-13-8) RECOVERED 14 in.

S#3, 4' to 6' (9-6-6-5) RECOVERED 12 in.

S#4, 10' to 12' (4-9-19-25) RECOVERED 10 in.

S#5, 15' to 17' (19-20-16-13) RECOVERED 6 in.

WATER LEVEL 4'6"
SIZE OF CASING: NW, LENGTH: 15'0"
DRILLER: G. SMITH, INSPECTOR: J. CRONIN
DATE STARTED & COMPLETED: 7-26-2018

All samples have been visually classified by . Unless otherwise specified, water levels noted were observed at completion of borings, and do not necessarily represent permanent ground water levels. Figures in parenthesis indicate the number of blows required to drive Two-inch Split Sampler 6 inches using 140 lb. weight falling 30 inches(±). Figures in column to left (if noted) indicate number of blows to drive casing one foot, using 300 lb. weight falling 24 inches (±).

CARR-DEE CORP.

37 LINDEN STREET MEDFORD, MA 02155-0001 Telephone (781) 391-4500

To: MCPHAIL ASSOC., LLC, 2269 MASS. AVE., CAMBRIDGE, MA Date: 7-30-2018 Job No.: 2018-146

Location: FULLER MIDDLE SCHOOL, 31 FLAGG DRIVE, FRAMINGHAM, MA Scale: 1 in.= 3 ft.

GROUND SURFACE +162.4

BORING 205

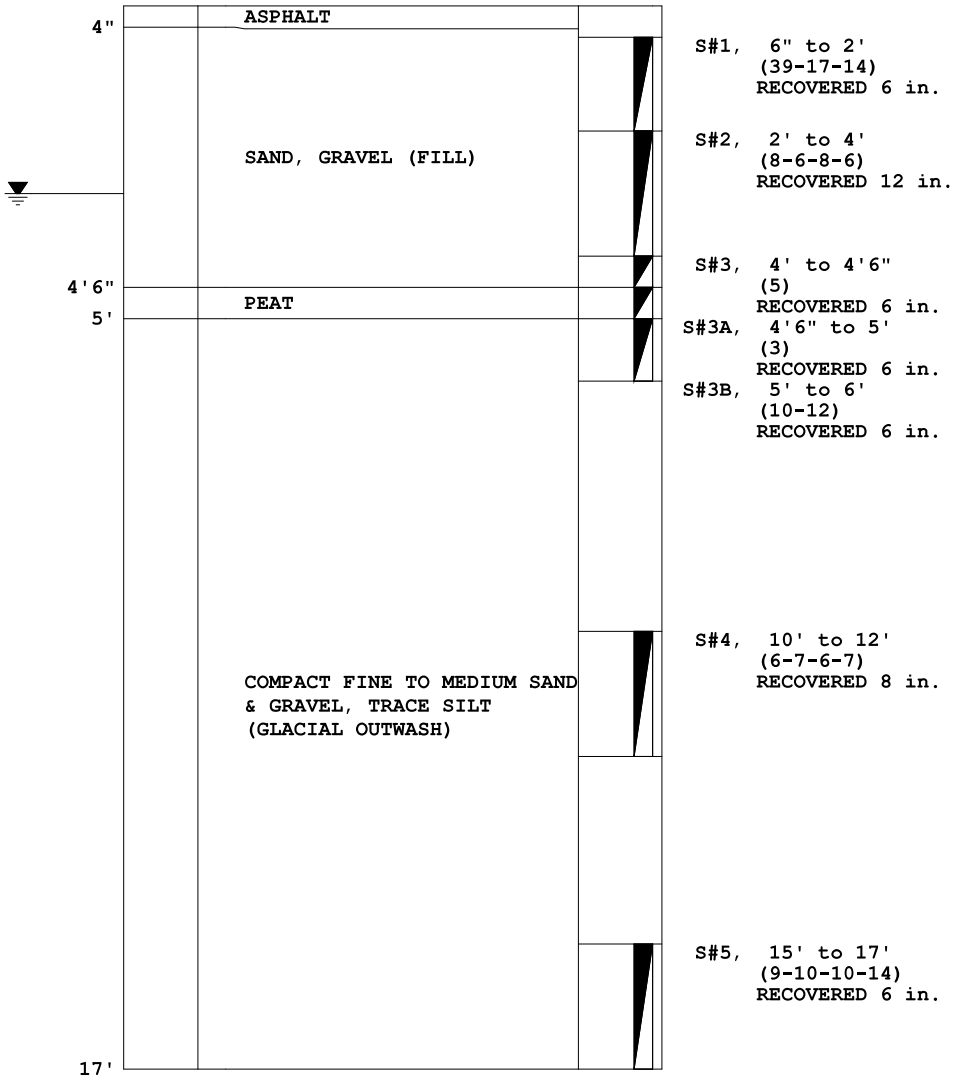

WATER LEVEL 3'
SIZE OF CASING: NW, LENGTH: 15'0"
DRILLER: G. SMITH, INSPECTOR: J. CRONIN
DATE STARTED & COMPLETED: 7-26-2018

All samples have been visually classified by . Unless otherwise specified, water levels noted were observed at completion of borings, and do not necessarily represent permanent ground water levels. Figures in parenthesis indicate the number of blows required to drive Two-inch Split Sampler 6 inches using 140 lb. weight falling 30 inches(±). Figures in column to left (if noted) indicate number of blows to drive casing one foot, using 300 lb. weight falling 24 inches (±).

CARR-DEE CORP.

37 LINDEN STREET MEDFORD, MA 02155-0001 Telephone (781) 391-4500

To: MCPHAIL ASSOC., LLC, 2269 MASS. AVE., CAMBRIDGE, MA Date: 7-30-2018 Job No.: 2018-146

Location: FULLER MIDDLE SCHOOL, 31 FLAGG DRIVE, FRAMINGHAM, MA Scale: 1 in.= 3 ft.

GROUND SURFACE +163.6

BORING 206

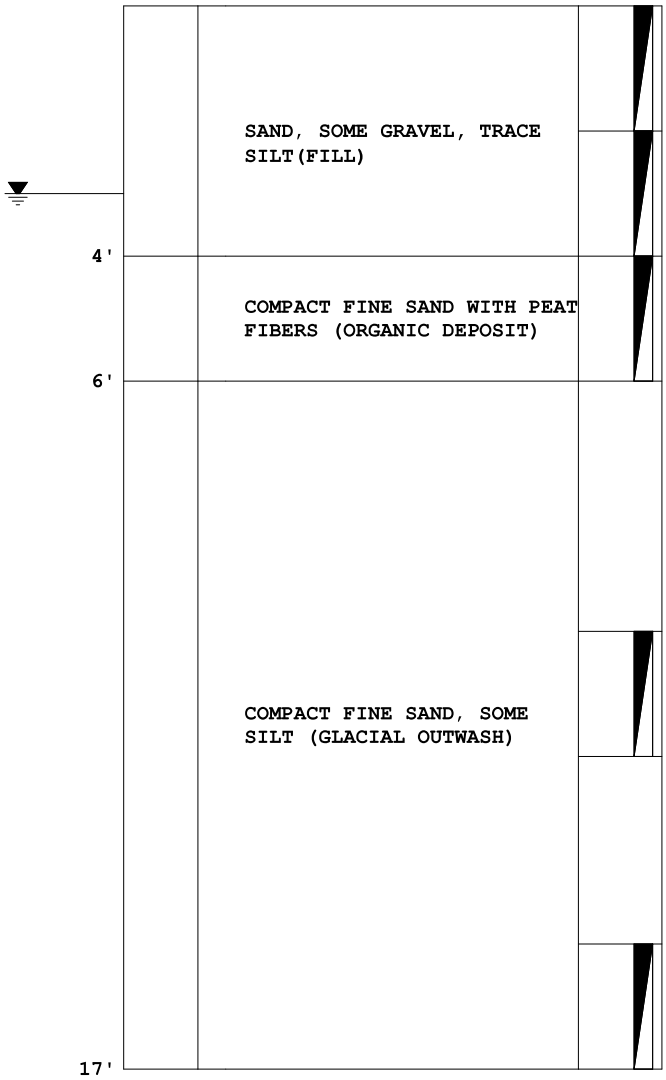

SAND, SOME GRAVEL, TRACE SILT(FILL)

COMPACT FINE SAND WITH PEAT FIBERS (ORGANIC DEPOSIT)

COMPACT FINE SAND, SOME SILT (GLACIAL OUTWASH)

S#1, 0' to 2' (7-9-5-5) RECOVERED 10 in.

S#2, 2' to 4' (9-12-16-16) RECOVERED 20 in.

S#3, 4' to 6' (6-6-17-19) RECOVERED 12 in.

S#4, 10' to 12' (3-8-6-11) RECOVERED 8 in.

S#5, 15' to 17' (8-8-9-11) RECOVERED 14 in.

WATER LEVEL 3'
SIZE OF CASING: NW, LENGTH: 15'0"
DRILLER: G. SMITH, INSPECTOR: J. CRONIN
DATE STARTED & COMPLETED: 7-27-2018

All samples have been visually classified by . Unless otherwise specified, water levels noted were observed at completion of borings, and do not necessarily represent permanent ground water levels. Figures in parenthesis indicate the number of blows required to drive Two-inch Split Sampler 6 inches using 140 lb. weight falling 30 inches(±). Figures in column to left (if noted) indicate number of blows to drive casing one foot, using 300 lb. weight falling 24 inches (±).

CARR-DEE CORP.

37 LINDEN STREET MEDFORD, MA 02155-0001 Telephone (781) 391-4500

To: MCPHAIL ASSOC., LLC, 2269 MASS. AVE., CAMBRIDGE, MA Date: 7-30-2018 Job No.: 2018-146

Location: FULLER MIDDLE SCHOOL, 31 FLAGG DRIVE, FRAMINGHAM, MA Scale: 1 in.= 3 ft.

GROUND SURFACE +162.4

BORING 207

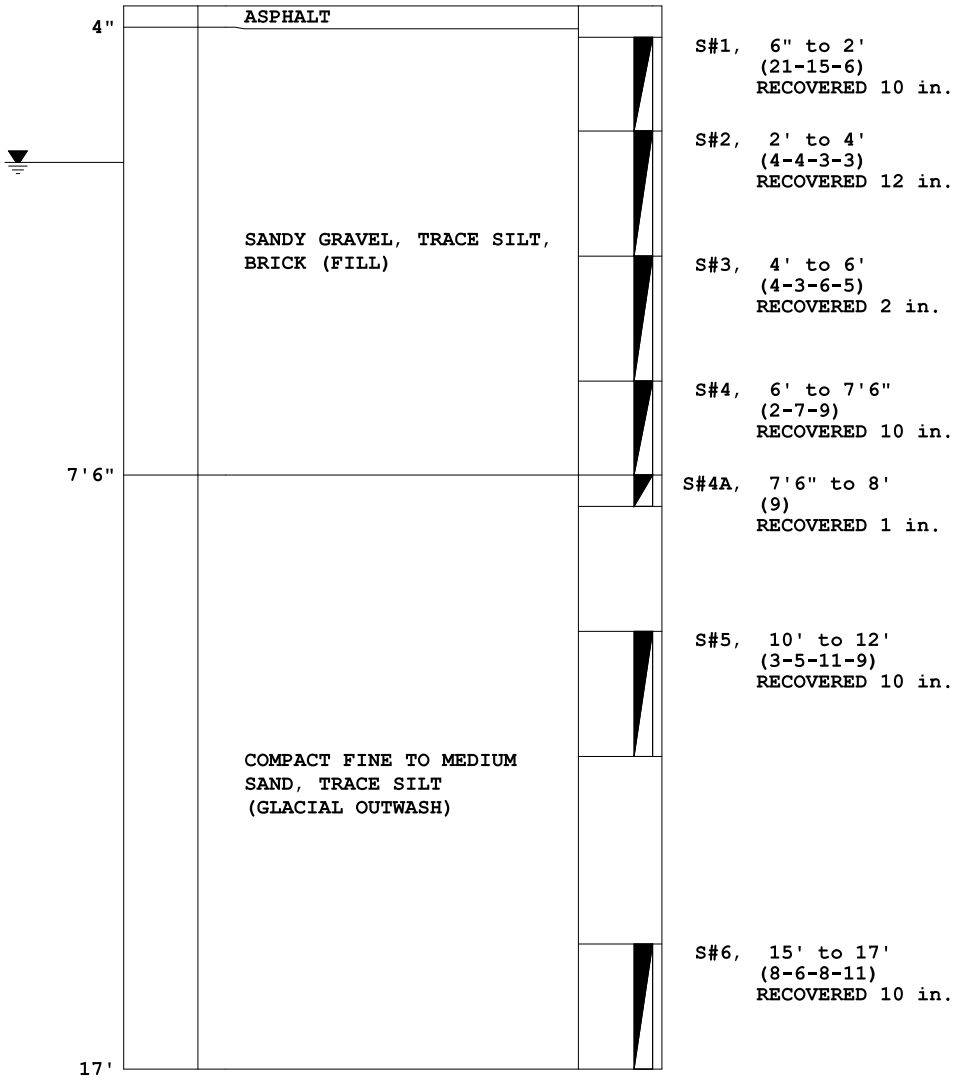

WATER LEVEL 2'6"
SIZE OF CASING: NW, LENGTH: 15'0"
DRILLER: G. SMITH, INSPECTOR: J. CRONIN
DATE STARTED & COMPLETED: 7-27-2018

All samples have been visually classified by . Unless otherwise specified, water levels noted were observed at completion of borings, and do not necessarily represent permanent ground water levels. Figures in parenthesis indicate the number of blows required to drive Two-inch Split Sampler 6 inches using 140 lb. weight falling 30 inches(±). Figures in column to left (if noted) indicate number of blows to drive casing one foot, using 300 lb. weight falling 24 inches (±).

CARR-DEE CORP.

37 LINDEN STREET MEDFORD, MA 02155-0001 Telephone (781) 391-4500

To: MCPHAIL ASSOC., LLC, 2269 MASS. AVE., CAMBRIDGE, MA Date: 7-30-2018 Job No.: 2018-146

Location: FULLER MIDDLE SCHOOL, 31 FLAGG DRIVE, FRAMINGHAM, MA Scale: 1 in.= 3 ft.

GROUND SURFACE +162.8

BORING 208

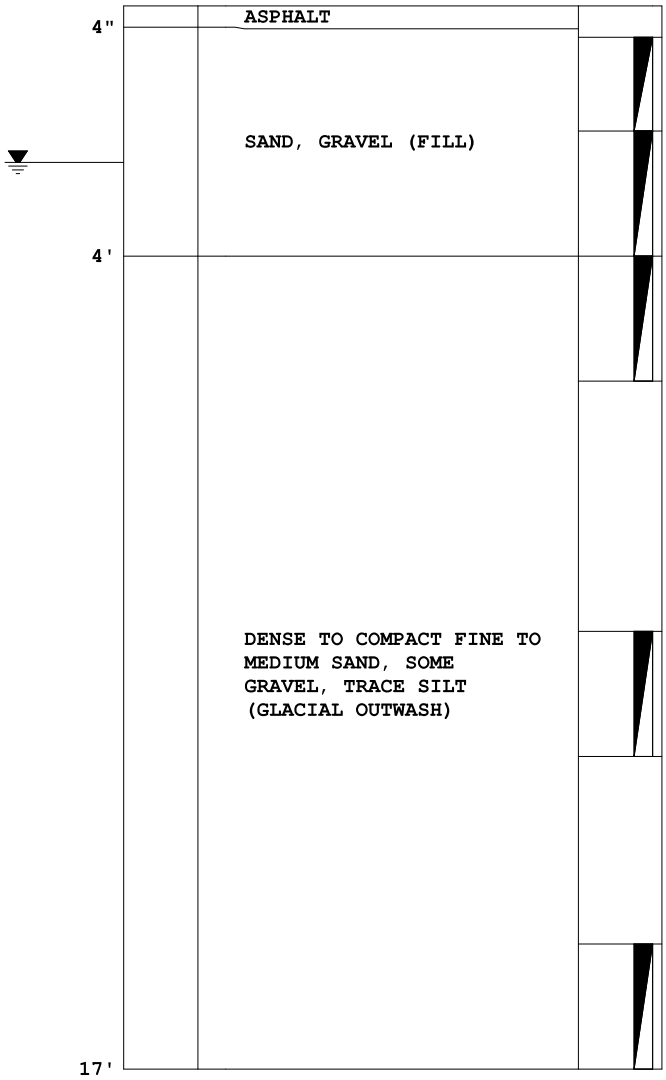

S#1, 6" to 2' (7-5-7) RECOVERED 4 in.

S#2, 2' to 4' (7-66-32-22) RECOVERED 16 in.

S#3, 4' to 6' (14-19-28-22) RECOVERED 16 in.

S#4, 10' to 12' (19-18-17-23) RECOVERED 8 in.

S#5, 15' to 17' (14-12-9-19) RECOVERED 10 in.

WATER LEVEL 2'6"
SIZE OF CASING: NW, LENGTH: 15'0"
DRILLER: G. SMITH, INSPECTOR: J. CRONIN
DATE STARTED & COMPLETED: 7-27-2018

All samples have been visually classified by . Unless otherwise specified, water levels noted were observed at completion of borings, and do not necessarily represent permanent ground water levels. Figures in parenthesis indicate the number of blows required to drive Two-inch Split Sampler 6 inches using 140 lb. weight falling 30 inches(±). Figures in column to left (if noted) indicate number of blows to drive casing one foot, using 300 lb. weight falling 24 inches (±).

APPENDIX C:

LABORATORY ANALYTICAL RESULTS

ANALYTICAL REPORT

Lab Number:	L1814382
Client:	McPhail Associates 2269 Massachusetts Avenue Cambridge, MA 02140
ATTN:	Ambrose Donovan
Phone:	(617) 868-1420
Project Name:	FULLER MIDDLE SCHOOL
Project Number:	6473
Report Date:	05/03/18

The original project report/data package is held by Alpha Analytical. This report/data package is paginated and should be reproduced only in its entirety. Alpha Analytical holds no responsibility for results and/or data that are not consistent with the original.

Certifications & Approvals: MA (M-MA086), NH NELAP (2064), NJ NELAP (MA935), CT (PH-0574), IL (200077), ME (MA00086), MD (348), NY (11148), NC (25700/666), PA (68-03671), RI (LAO00065), TX (T104704476), VT (VT-0935), VA (460195), USDA (Permit #P330-14-00197).

Eight Walkup Drive, Westborough, MA 01581-1019
508-898-9220 (Fax) 508-898-9193 800-624-9220 - www.alphalab.com

Project Name: FULLER MIDDLE SCHOOL
Project Number: 6473

Lab Number: L1814382
Report Date: 05/03/18

Alpha Sample ID	Client ID	Matrix	Sample Location	Collection Date/Time	Receive Date
L1814382-01	B-105 (COMP)	FILL	FRAMINGHAM, MA	04/24/18 13:00	04/24/18
L1814382-02	B-105, S-2	FILL	FRAMINGHAM, MA	04/24/18 13:00	04/24/18
L1814382-03	B-101 (COMP)	FILL	FRAMINGHAM, MA	04/24/18 13:00	04/24/18
L1814382-04	B-102 (COMP)	FILL	FRAMINGHAM, MA	04/24/18 13:00	04/24/18

Project Name: FULLER MIDDLE SCHOOL **Lab Number:** L1814382

Project Number: 6473 **Report Date:** 05/03/18

MADEP MCP Response Action Analytical Report Certification

This form provides certifications for all samples performed by MCP methods. Please refer to the Sample Results and Container Information sections of this report for specification of MCP methods used for each analysis. The following questions pertain only to MCP Analytical Methods.

An affirmative response to questions A through F is required for "Presumptive Certainty" status		
A	Were all samples received in a condition consistent with those described on the Chain-of-Custody, properly preserved (including temperature) in the field or laboratory, and prepared/analyzed within method holding times?	YES
B	Were the analytical method(s) and all associated QC requirements specified in the selected CAM protocol(s) followed?	YES
C	Were all required corrective actions and analytical response actions specified in the selected CAM protocol(s) implemented for all identified performance standard non-conformances?	YES
D	Does the laboratory report comply with all the reporting requirements specified in CAM VII A, "Quality Assurance and Quality Control Guidelines for the Acquisition and Reporting of Analytical Data?"	YES
E a.	VPH, EPH, and APH Methods only: Was each method conducted without significant modification(s)? (Refer to the individual method(s) for a list of significant modifications).	YES
E b.	APH and TO-15 Methods only: Was the complete analyte list reported for each method?	N/A
F	Were all applicable CAM protocol QC and performance standard non-conformances identified and evaluated in a laboratory narrative (including all "No" responses to Questions A through E)?	YES

A response to questions G, H and I is required for "Presumptive Certainty" status		
G	Were the reporting limits at or below all CAM reporting limits specified in the selected CAM protocol(s)?	YES
H	Were all QC performance standards specified in the CAM protocol(s) achieved?	NO
I	Were results reported for the complete analyte list specified in the selected CAM protocol(s)?	NO

For any questions answered "No", please refer to the case narrative section on the following page(s).

Please note that sample matrix information is located in the Sample Results section of this report.

Project Name: FULLER MIDDLE SCHOOL **Lab Number:** L1814382
Project Number: 6473 **Report Date:** 05/03/18

Case Narrative

The samples were received in accordance with the Chain of Custody and no significant deviations were encountered during the preparation or analysis unless otherwise noted. Sample Receipt, Container Information, and the Chain of Custody are located at the back of the report.

Results contained within this report relate only to the samples submitted under this Alpha Lab Number and meet NELAP requirements for all NELAP accredited parameters unless otherwise noted in the following narrative. The data presented in this report is organized by parameter (i.e. VOC, SVOC, etc.). Sample specific Quality Control data (i.e. Surrogate Spike Recovery) is reported at the end of the target analyte list for each individual sample, followed by the Laboratory Batch Quality Control at the end of each parameter. Tentatively Identified Compounds (TICs), if requested, are reported for compounds identified to be present and are not part of the method/program Target Compound List, even if only a subset of the TCL are being reported. If a sample was re-analyzed or re-extracted due to a required quality control corrective action and if both sets of data are reported, the Laboratory ID of the re-analysis or re-extraction is designated with an "R" or "RE", respectively. When multiple Batch Quality Control elements are reported (e.g. more than one LCS), the associated samples for each element are noted in the grey shaded header line of each data table. Any Laboratory Batch, Sample Specific % recovery or RPD value that is outside the listed Acceptance Criteria is bolded in the report. All specific QC information is also incorporated in the Data Usability format of our Data Merger tool where it can be reviewed along with any associated usability implications. Soil/sediments, solids and tissues are reported on a dry weight basis unless otherwise noted. Definitions of all data qualifiers and acronyms used in this report are provided in the Glossary located at the back of the report.

In reference to questions H (CAM) or 4 (RCP) when "NO" is checked, the performance criteria for CAM and RCP methods allow for some quality control failures to occur and still be within method compliance. In these instances the specific failure is not narrated but noted in the associated QC table. The information is also incorporated in the Data Usability format of our Data Merger tool where it can be reviewed along with any associated usability implications.

Please see the associated ADEx data file for a comparison of laboratory reporting limits that were achieved with the regulatory Numerical Standards requested on the Chain of Custody.

HOLD POLICY
For samples submitted on hold, Alpha's policy is to hold samples (with the exception of Air canisters) free of charge for 21 calendar days from the date the project is completed. After 21 calendar days, we will dispose of all samples submitted including those put on hold unless you have contacted your Client Service Representative and made arrangements for Alpha to continue to hold the samples. Air canisters will be disposed after 3 business days from the date the project is completed.

Please contact Client Services at 800-624-9220 with any questions.

Project Name: FULLER MIDDLE SCHOOL **Lab Number:** L1814382
Project Number: 6473 **Report Date:** 05/03/18

Case Narrative (continued)

MCP Related Narratives

Sample Receipt

L1814382-01 through -04: The collection time was obtained from the container labels.

In reference to question H:

A Matrix Spike was not submitted for the analysis of Total Metals.

Volatile Organics

In reference to question H:

The initial calibration, associated with L1814382-02, did not meet the method required minimum response factor on the lowest calibration standard for 2-butanone (0.0764), 4-methyl-2-pentanone (0.0839) and 1,4-dioxane (0.0012), as well as the average response factor for 2-butanone and 1,4-dioxane.

The continuing calibration standard, associated with L1814382-02, is outside the acceptance criteria for several compounds; however, it is within overall method allowances. A copy of the continuing calibration standard is included as an addendum to this report.

Semivolatile Organics

In reference to question I:

All samples were analyzed for a subset of MCP analytes per client request.

Total Metals

In reference to question I:

All samples were analyzed for a subset of MCP analytes per client request.

I, the undersigned, attest under the pains and penalties of perjury that, to the best of my knowledge and belief and based upon my personal inquiry of those responsible for providing the information contained in this analytical report, such information is accurate and complete. This certificate of analysis is not complete unless this page accompanies any and all pages of this report.

Authorized Signature: Michelle M. Morris

Title: Technical Director/Representative Date: 05/03/18

ORGANICS

VOLATILES

Project Name: FULLER MIDDLE SCHOOL **Lab Number:** L1814382

Project Number: 6473 **Report Date:** 05/03/18

SAMPLE RESULTS

Lab ID: L1814382-02
Client ID: B-105, S-2
Sample Location: FRAMINGHAM, MA

Date Collected: 04/24/18 13:00
Date Received: 04/24/18
Field Prep: Not Specified

Sample Depth: 2-4
Matrix: Fill
Analytical Method: 97,8260C
Analytical Date: 04/27/18 16:28
Analyst: MV
Percent Solids: 86%

Parameter	Result	Qualifier	Units	RL	MDL	Dilution Factor
MCP Volatile Organics by 8260/5035 - Westborough Lab						
Methylene chloride	ND		ug/kg	19	--	1
1,1-Dichloroethane	ND		ug/kg	2.9	--	1
Chloroform	ND		ug/kg	2.9	--	1
Carbon tetrachloride	ND		ug/kg	1.9	--	1
1,2-Dichloropropane	ND		ug/kg	6.8	--	1
Dibromochloromethane	ND		ug/kg	1.9	--	1
1,1,2-Trichloroethane	ND		ug/kg	2.9	--	1
Tetrachloroethene	ND		ug/kg	1.9	--	1
Chlorobenzene	ND		ug/kg	1.9	--	1
Trichlorofluoromethane	ND		ug/kg	7.8	--	1
1,2-Dichloroethane	ND		ug/kg	1.9	--	1
1,1,1-Trichloroethane	ND		ug/kg	1.9	--	1
Bromodichloromethane	ND		ug/kg	1.9	--	1
trans-1,3-Dichloropropene	ND		ug/kg	1.9	--	1
cis-1,3-Dichloropropene	ND		ug/kg	1.9	--	1
1,3-Dichloropropene, Total	ND		ug/kg	1.9	--	1
1,1-Dichloropropene	ND		ug/kg	7.8	--	1
Bromoform	ND		ug/kg	7.8	--	1
1,1,2,2-Tetrachloroethane	ND		ug/kg	1.9	--	1
Benzene	ND		ug/kg	1.9	--	1
Toluene	ND		ug/kg	2.9	--	1
Ethylbenzene	ND		ug/kg	1.9	--	1
Chloromethane	ND		ug/kg	7.8	--	1
Bromomethane	ND		ug/kg	3.9	--	1
Vinyl chloride	ND		ug/kg	3.9	--	1
Chloroethane	ND		ug/kg	3.9	--	1
1,1-Dichloroethene	ND		ug/kg	1.9	--	1
trans-1,2-Dichloroethene	ND		ug/kg	2.9	--	1

Project Name: FULLER MIDDLE SCHOOL **Lab Number:** L1814382

Project Number: 6473 **Report Date:** 05/03/18

SAMPLE RESULTS

Lab ID: L1814382-02 Date Collected: 04/24/18 13:00

Client ID: B-105, S-2 Date Received: 04/24/18

Sample Location: FRAMINGHAM, MA Field Prep: Not Specified

Sample Depth: 2-4

Parameter	Result	Qualifier	Units	RL	MDL	Dilution Factor
MCP Volatile Organics by 8260/5035 - Westborough Lab						
Trichloroethene	ND		ug/kg	1.9	--	1
1,2-Dichlorobenzene	ND		ug/kg	7.8	--	1
1,3-Dichlorobenzene	ND		ug/kg	7.8	--	1
1,4-Dichlorobenzene	ND		ug/kg	7.8	--	1
Methyl tert butyl ether	ND		ug/kg	3.9	--	1
p/m-Xylene	ND		ug/kg	3.9	--	1
o-Xylene	ND		ug/kg	3.9	--	1
Xylenes, Total	ND		ug/kg	3.9	--	1
cis-1,2-Dichloroethene	ND		ug/kg	1.9	--	1
1,2-Dichloroethene, Total	ND		ug/kg	1.9	--	1
Dibromomethane	ND		ug/kg	7.8	--	1
1,2,3-Trichloropropane	ND		ug/kg	7.8	--	1
Styrene	ND		ug/kg	3.9	--	1
Dichlorodifluoromethane	ND		ug/kg	19	--	1
Acetone	ND		ug/kg	70	--	1
Carbon disulfide	ND		ug/kg	7.8	--	1
Methyl ethyl ketone	ND		ug/kg	19	--	1
Methyl isobutyl ketone	ND		ug/kg	19	--	1
2-Hexanone	ND		ug/kg	19	--	1
Bromochloromethane	ND		ug/kg	7.8	--	1
Tetrahydrofuran	ND		ug/kg	7.8	--	1
2,2-Dichloropropane	ND		ug/kg	9.7	--	1
1,2-Dibromoethane	ND		ug/kg	7.8	--	1
1,3-Dichloropropane	ND		ug/kg	7.8	--	1
1,1,1,2-Tetrachloroethane	ND		ug/kg	1.9	--	1
Bromobenzene	ND		ug/kg	9.7	--	1
n-Butylbenzene	ND		ug/kg	1.9	--	1
sec-Butylbenzene	ND		ug/kg	1.9	--	1
tert-Butylbenzene	ND		ug/kg	7.8	--	1
o-Chlorotoluene	ND		ug/kg	7.8	--	1
p-Chlorotoluene	ND		ug/kg	7.8	--	1
1,2-Dibromo-3-chloropropane	ND		ug/kg	7.8	--	1
Hexachlorobutadiene	ND		ug/kg	7.8	--	1
Isopropylbenzene	ND		ug/kg	1.9	--	1
p-Isopropyltoluene	ND		ug/kg	1.9	--	1
Naphthalene	ND		ug/kg	7.8	--	1
n-Propylbenzene	ND		ug/kg	1.9	--	1

Project Name: FULLER MIDDLE SCHOOL **Lab Number:** L1814382

Project Number: 6473 **Report Date:** 05/03/18

SAMPLE RESULTS

Lab ID: L1814382-02 Date Collected: 04/24/18 13:00

Client ID: B-105, S-2 Date Received: 04/24/18

Sample Location: FRAMINGHAM, MA Field Prep: Not Specified

Sample Depth: 2-4

Parameter	Result	Qualifier	Units	RL	MDL	Dilution Factor
MCP Volatile Organics by 8260/5035 - Westborough Lab						
1,2,3-Trichlorobenzene	ND		ug/kg	7.8	--	1
1,2,4-Trichlorobenzene	ND		ug/kg	7.8	--	1
1,3,5-Trimethylbenzene	ND		ug/kg	7.8	--	1
1,2,4-Trimethylbenzene	ND		ug/kg	7.8	--	1
Diethyl ether	ND		ug/kg	9.7	--	1
Diisopropyl Ether	ND		ug/kg	7.8	--	1
Ethyl-Tert-Butyl-Ether	ND		ug/kg	7.8	--	1
Tertiary-Amyl Methyl Ether	ND		ug/kg	7.8	--	1
1,4-Dioxane	ND		ug/kg	78	--	1

Surrogate	% Recovery	Qualifier	Acceptance Criteria
1,2-Dichloroethane-d4	90		70-130
Toluene-d8	90		70-130
4-Bromofluorobenzene	83		70-130
Dibromofluoromethane	91		70-130

Project Name: FULLER MIDDLE SCHOOL **Lab Number:** L1814382

Project Number: 6473 **Report Date:** 05/03/18

Method Blank Analysis
Batch Quality Control

Analytical Method: 97,8260C
Analytical Date: 04/27/18 10:50
Analyst: MV

Parameter	Result	Qualifier	Units	RL	MDL
MCP Volatile Organics by 8260/5035 - Westborough Lab for sample(s): 02 Batch: WG1110711-5					
Methylene chloride	ND		ug/kg	10	--
1,1-Dichloroethane	ND		ug/kg	1.5	--
Chloroform	ND		ug/kg	1.5	--
Carbon tetrachloride	ND		ug/kg	1.0	--
1,2-Dichloropropane	ND		ug/kg	3.5	--
Dibromochloromethane	ND		ug/kg	1.0	--
1,1,2-Trichloroethane	ND		ug/kg	1.5	--
Tetrachloroethene	ND		ug/kg	1.0	--
Chlorobenzene	ND		ug/kg	1.0	--
Trichlorofluoromethane	ND		ug/kg	4.0	--
1,2-Dichloroethane	ND		ug/kg	1.0	--
1,1,1-Trichloroethane	ND		ug/kg	1.0	--
Bromodichloromethane	ND		ug/kg	1.0	--
trans-1,3-Dichloropropene	ND		ug/kg	1.0	--
cis-1,3-Dichloropropene	ND		ug/kg	1.0	--
1,3-Dichloropropene, Total	ND		ug/kg	1.0	--
1,1-Dichloropropene	ND		ug/kg	4.0	--
Bromoform	ND		ug/kg	4.0	--
1,1,2,2-Tetrachloroethane	ND		ug/kg	1.0	--
Benzene	ND		ug/kg	1.0	--
Toluene	ND		ug/kg	1.5	--
Ethylbenzene	ND		ug/kg	1.0	--
Chloromethane	ND		ug/kg	4.0	--
Bromomethane	ND		ug/kg	2.0	--
Vinyl chloride	ND		ug/kg	2.0	--
Chloroethane	ND		ug/kg	2.0	--
1,1-Dichloroethene	ND		ug/kg	1.0	--
trans-1,2-Dichloroethene	ND		ug/kg	1.5	--
Trichloroethene	ND		ug/kg	1.0	--

Project Name: FULLER MIDDLE SCHOOL **Lab Number:** L1814382

Project Number: 6473 **Report Date:** 05/03/18

Method Blank Analysis
Batch Quality Control

Analytical Method: 97,8260C
Analytical Date: 04/27/18 10:50
Analyst: MV

Parameter	Result	Qualifier	Units	RL	MDL
MCP Volatile Organics by 8260/5035 - Westborough Lab for sample(s): 02 Batch: WG1110711-5					
1,2-Dichlorobenzene	ND		ug/kg	4.0	--
1,3-Dichlorobenzene	ND		ug/kg	4.0	--
1,4-Dichlorobenzene	ND		ug/kg	4.0	--
Methyl tert butyl ether	ND		ug/kg	2.0	--
p/m-Xylene	ND		ug/kg	2.0	--
o-Xylene	ND		ug/kg	2.0	--
Xylenes, Total	ND		ug/kg	2.0	--
cis-1,2-Dichloroethene	ND		ug/kg	1.0	--
1,2-Dichloroethene, Total	ND		ug/kg	1.0	--
Dibromomethane	ND		ug/kg	4.0	--
1,4-Dichlorobutane	ND		ug/kg	10	--
1,2,3-Trichloropropane	ND		ug/kg	4.0	--
Styrene	ND		ug/kg	2.0	--
Dichlorodifluoromethane	ND		ug/kg	10	--
Acetone	ND		ug/kg	36	--
Carbon disulfide	ND		ug/kg	4.0	--
Methyl ethyl ketone	ND		ug/kg	10	--
Methyl isobutyl ketone	ND		ug/kg	10	--
2-Hexanone	ND		ug/kg	10	--
Ethyl methacrylate	ND		ug/kg	10	--
Acrylonitrile	ND		ug/kg	4.0	--
Bromochloromethane	ND		ug/kg	4.0	--
Tetrahydrofuran	ND		ug/kg	4.0	--
2,2-Dichloropropane	ND		ug/kg	5.0	--
1,2-Dibromoethane	ND		ug/kg	4.0	--
1,3-Dichloropropane	ND		ug/kg	4.0	--
1,1,1,2-Tetrachloroethane	ND		ug/kg	1.0	--
Bromobenzene	ND		ug/kg	5.0	--
n-Butylbenzene	ND		ug/kg	1.0	--

Project Name: FULLER MIDDLE SCHOOL **Lab Number:** L1814382

Project Number: 6473 **Report Date:** 05/03/18

Method Blank Analysis
Batch Quality Control

Analytical Method: 97,8260C
Analytical Date: 04/27/18 10:50
Analyst: MV

Parameter	Result	Qualifier	Units	RL	MDL
MCP Volatile Organics by 8260/5035 - Westborough Lab for sample(s): 02 Batch: WG1110711-5					
sec-Butylbenzene	ND		ug/kg	1.0	--
tert-Butylbenzene	ND		ug/kg	4.0	--
o-Chlorotoluene	ND		ug/kg	4.0	--
p-Chlorotoluene	ND		ug/kg	4.0	--
1,2-Dibromo-3-chloropropane	ND		ug/kg	4.0	--
Hexachlorobutadiene	ND		ug/kg	4.0	--
Isopropylbenzene	ND		ug/kg	1.0	--
p-Isopropyltoluene	ND		ug/kg	1.0	--
Naphthalene	ND		ug/kg	4.0	--
n-Propylbenzene	ND		ug/kg	1.0	--
1,2,3-Trichlorobenzene	ND		ug/kg	4.0	--
1,2,4-Trichlorobenzene	ND		ug/kg	4.0	--
1,3,5-Trimethylbenzene	ND		ug/kg	4.0	--
1,2,4-Trimethylbenzene	ND		ug/kg	4.0	--
trans-1,4-Dichloro-2-butene	ND		ug/kg	5.0	--
Diethyl ether	ND		ug/kg	5.0	--
Diisopropyl Ether	ND		ug/kg	4.0	--
Ethyl-Tert-Butyl-Ether	ND		ug/kg	4.0	--
Tertiary-Amyl Methyl Ether	ND		ug/kg	4.0	--
1,4-Dioxane	ND		ug/kg	40	--
2-Chloroethylvinyl ether	ND		ug/kg	20	--
Halothane	ND		ug/kg	40	--
Ethyl Acetate	ND		ug/kg	20	--
Freon-113	ND		ug/kg	20	--
Vinyl acetate	ND		ug/kg	10	--

Project Name: FULLER MIDDLE SCHOOL **Lab Number:** L1814382

Project Number: 6473 **Report Date:** 05/03/18

Method Blank Analysis
Batch Quality Control

Analytical Method: 97,8260C
Analytical Date: 04/27/18 10:50
Analyst: MV

Parameter	Result	Qualifier	Units	RL	MDL
MCP Volatile Organics by 8260/5035 - Westborough Lab for sample(s): 02 Batch: WG1110711-5					

Surrogate	%Recovery	Qualifier	Acceptance Criteria
1,2-Dichloroethane-d4	91		70-130
Toluene-d8	86		70-130
4-Bromofluorobenzene	97		70-130
Dibromofluoromethane	90		70-130

Lab Control Sample Analysis
Batch Quality Control

Project Name: FULLER MIDDLE SCHOOL
Project Number: 6473

Lab Number: L1814382
Report Date: 05/03/18

Parameter	LCS %Recovery	Qual	LCSD %Recovery	Qual	%Recovery Limits	RPD	Qual	RPD Limits
MCP Volatile Organics by 8260/5035 - Westborough Lab Associated sample(s): 02 Batch: WG1110711-3 WG1110711-4								
Methylene chloride	86		86		70-130	0		20
1,1-Dichloroethane	88		88		70-130	0		20
Chloroform	92		88		70-130	4		20
Carbon tetrachloride	91		89		70-130	2		20
1,2-Dichloropropane	90		90		70-130	0		20
Dibromochloromethane	92		96		70-130	4		20
1,1,2-Trichloroethane	101		101		70-130	0		20
Tetrachloroethene	100		100		70-130	0		20
Chlorobenzene	92		90		70-130	2		20
Trichlorofluoromethane	86		92		70-130	7		20
1,2-Dichloroethane	86		87		70-130	1		20
1,1,1-Trichloroethane	91		91		70-130	0		20
Bromodichloromethane	90		90		70-130	0		20
trans-1,3-Dichloropropene	95		95		70-130	0		20
cis-1,3-Dichloropropene	89		88		70-130	1		20
1,1-Dichloropropene	91		92		70-130	1		20
Bromoform	89		91		70-130	2		20
1,1,2,2-Tetrachloroethane	85		92		70-130	8		20
Benzene	89		88		70-130	1		20
Toluene	95		94		70-130	1		20
Ethylbenzene	89		87		70-130	2		20
Chloromethane	90		92		70-130	2		20
Bromomethane	90		92		70-130	2		20

Lab Control Sample Analysis
Batch Quality Control

Project Name: FULLER MIDDLE SCHOOL
Project Number: 6473

Lab Number: L1814382
Report Date: 05/03/18

MCP Volatile Organics by 8260/5035 - Westborough Lab Associated sample(s): 02 Batch: WG1110711-3 WG1110711-4

Parameter	LCS %Recovery	Qual	LCSD %Recovery	Qual	%Recovery Limits	RPD	Qual	RPD Limits
Vinyl chloride	91		91		70-130	0		20
Chloroethane	96		95		70-130	1		20
1,1-Dichloroethene	95		95		70-130	0		20
trans-1,2-Dichloroethene	93		91		70-130	2		20
Trichloroethene	93		92		70-130	1		20
1,2-Dichlorobenzene	92		92		70-130	0		20
1,3-Dichlorobenzene	92		91		70-130	1		20
1,4-Dichlorobenzene	90		90		70-130	0		20
Methyl tert butyl ether	99		99		70-130	0		20
p/m-Xylene	87		92		70-130	6		20
o-Xylene	95		96		70-130	1		20
cis-1,2-Dichloroethene	94		96		70-130	2		20
Dibromomethane	93		91		70-130	2		20
1,4-Dichlorobutane	93		97		70-130	4		20
1,2,3-Trichloropropane	84		90		70-130	7		20
Styrene	88		96		70-130	9		20
Dichlorodifluoromethane	118		120		70-130	2		20
Acetone	**64**	Q	**58**	Q	70-130	10		20
Carbon disulfide	83		82		70-130	1		20
Methyl ethyl ketone	85		80		70-130	6		20
Methyl isobutyl ketone	93		90		70-130	3		20
2-Hexanone	81		75		70-130	8		20
Ethyl methacrylate	97		98		70-130	1		20

Lab Control Sample Analysis
Batch Quality Control

Project Name: FULLER MIDDLE SCHOOL
Project Number: 6473

Lab Number: L1814382
Report Date: 05/03/18

Parameter	LCS %Recovery	Qual	LCSD %Recovery	Qual	%Recovery Limits	RPD	Qual	RPD Limits
MCP Volatile Organics by 8260/5035 - Westborough Lab Associated sample(s): 02 Batch: WG1110711-3 WG1110711-4								
Acrylonitrile	96		95		70-130	1		20
Bromochloromethane	96		96		70-130	0		20
Tetrahydrofuran	93		93		70-130	0		20
2,2-Dichloropropane	90		90		70-130	0		20
1,2-Dibromoethane	89		84		70-130	6		20
1,3-Dichloropropane	84		86		70-130	2		20
1,1,1,2-Tetrachloroethane	97		95		70-130	2		20
Bromobenzene	93		93		70-130	0		20
n-Butylbenzene	88		89		70-130	1		20
sec-Butylbenzene	89		91		70-130	2		20
tert-Butylbenzene	90		92		70-130	2		20
o-Chlorotoluene	84		88		70-130	5		20
p-Chlorotoluene	85		89		70-130	5		20
1,2-Dibromo-3-chloropropane	84		85		70-130	1		20
Hexachlorobutadiene	86		86		70-130	0		20
Isopropylbenzene	87		93		70-130	7		20
p-Isopropyltoluene	92		93		70-130	1		20
Naphthalene	95		95		70-130	0		20
n-Propylbenzene	85		90		70-130	6		20
1,2,3-Trichlorobenzene	94		92		70-130	2		20
1,2,4-Trichlorobenzene	93		93		70-130	0		20
1,3,5-Trimethylbenzene	88		91		70-130	3		20
1,2,4-Trimethylbenzene	90		92		70-130	2		20

Lab Control Sample Analysis
Batch Quality Control

Project Name: FULLER MIDDLE SCHOOL
Project Number: 6473

Lab Number: L1814382
Report Date: 05/03/18

Parameter	LCS %Recovery	Qual	LCSD %Recovery	Qual	%Recovery Limits	RPD	Qual	RPD Limits
MCP Volatile Organics by 8260/5035 - Westborough Lab Associated sample(s): 02 Batch: WG1110711-3 WG1110711-4								
trans-1,4-Dichloro-2-butene	86		89		70-130	3		20
Diethyl ether	103		101		70-130	2		20
Diisopropyl Ether	83		84		70-130	1		20
Ethyl-Tert-Butyl-Ether	88		88		70-130	0		20
Tertiary-Amyl Methyl Ether	89		89		70-130	0		20
1,4-Dioxane	111		109		70-130	2		20
2-Chloroethylvinyl ether	93		89		70-130	4		20
Halothane	96		95		70-130	1		20
Ethyl Acetate	84		85		70-130	1		20
Freon-113	93		93		70-130	0		20
Vinyl acetate	90		91		70-130	1		20

Surrogate	LCS %Recovery	Qual	LCSD %Recovery	Qual	Acceptance Criteria
1,2-Dichloroethane-d4	90		91		70-130
Toluene-d8	101		103		70-130
4-Bromofluorobenzene	89		96		70-130
Dibromofluoromethane	94		95		70-130

SEMIVOLATILES

Project Name: FULLER MIDDLE SCHOOL
Project Number: 6473

Lab Number: L1814382
Report Date: 05/03/18

SAMPLE RESULTS

Lab ID: L1814382-01
Client ID: B-105 (COMP)
Sample Location: FRAMINGHAM, MA

Date Collected: 04/24/18 13:00
Date Received: 04/24/18
Field Prep: Not Specified

Sample Depth: 0-4
Matrix: Fill
Analytical Method: 97,8270D
Analytical Date: 04/26/18 06:49
Analyst: SZ
Percent Solids: 84%

Extraction Method: EPA 3546
Extraction Date: 04/25/18 08:32

Parameter	Result	Qualifier	Units	RL	MDL	Dilution Factor
MCP PAHs - Westborough Lab						
Acenaphthene	ND		ug/kg	150	--	1
Fluoranthene	160		ug/kg	120	--	1
Naphthalene	ND		ug/kg	190	--	1
Benzo(a)anthracene	120		ug/kg	120	--	1
Benzo(a)pyrene	ND		ug/kg	150	--	1
Benzo(b)fluoranthene	150		ug/kg	120	--	1
Benzo(k)fluoranthene	ND		ug/kg	120	--	1
Chrysene	140		ug/kg	120	--	1
Acenaphthylene	ND		ug/kg	150	--	1
Anthracene	ND		ug/kg	120	--	1
Benzo(ghi)perylene	ND		ug/kg	150	--	1
Fluorene	ND		ug/kg	190	--	1
Phenanthrene	ND		ug/kg	120	--	1
Dibenzo(a,h)anthracene	ND		ug/kg	120	--	1
Indeno(1,2,3-cd)pyrene	ND		ug/kg	150	--	1
Pyrene	210		ug/kg	120	--	1
2-Methylnaphthalene	ND		ug/kg	230	--	1

Surrogate	% Recovery	Qualifier	Acceptance Criteria
Nitrobenzene-d5	92		30-130
2-Fluorobiphenyl	84		30-130
4-Terphenyl-d14	64		30-130

Project Name: FULLER MIDDLE SCHOOL
Project Number: 6473

Lab Number: L1814382
Report Date: 05/03/18

SAMPLE RESULTS

Lab ID: L1814382-03
Client ID: B-101 (COMP)
Sample Location: FRAMINGHAM, MA

Date Collected: 04/24/18 13:00
Date Received: 04/24/18
Field Prep: Not Specified

Sample Depth: 0-5
Matrix: Fill
Analytical Method: 97,8270D
Analytical Date: 04/26/18 05:03
Analyst: SZ
Percent Solids: 85%

Extraction Method: EPA 3546
Extraction Date: 04/25/18 08:32

Parameter	Result	Qualifier	Units	RL	MDL	Dilution Factor
MCP PAHs - Westborough Lab						
Acenaphthene	ND		ug/kg	150	--	1
Fluoranthene	ND		ug/kg	110	--	1
Naphthalene	ND		ug/kg	190	--	1
Benzo(a)anthracene	ND		ug/kg	110	--	1
Benzo(a)pyrene	ND		ug/kg	150	--	1
Benzo(b)fluoranthene	ND		ug/kg	110	--	1
Benzo(k)fluoranthene	ND		ug/kg	110	--	1
Chrysene	ND		ug/kg	110	--	1
Acenaphthylene	ND		ug/kg	150	--	1
Anthracene	ND		ug/kg	110	--	1
Benzo(ghi)perylene	ND		ug/kg	150	--	1
Fluorene	ND		ug/kg	190	--	1
Phenanthrene	ND		ug/kg	110	--	1
Dibenzo(a,h)anthracene	ND		ug/kg	110	--	1
Indeno(1,2,3-cd)pyrene	ND		ug/kg	150	--	1
Pyrene	ND		ug/kg	110	--	1
2-Methylnaphthalene	ND		ug/kg	230	--	1

Surrogate	% Recovery	Qualifier	Acceptance Criteria
Nitrobenzene-d5	81		30-130
2-Fluorobiphenyl	71		30-130
4-Terphenyl-d14	55		30-130

Project Name: FULLER MIDDLE SCHOOL
Project Number: 6473

Lab Number: L1814382
Report Date: 05/03/18

SAMPLE RESULTS

Lab ID: L1814382-04
Client ID: B-102 (COMP)
Sample Location: FRAMINGHAM, MA

Date Collected: 04/24/18 13:00
Date Received: 04/24/18
Field Prep: Not Specified

Sample Depth: 0-6
Matrix: Fill
Analytical Method: 97,8270D
Analytical Date: 04/26/18 05:27
Analyst: SZ
Percent Solids: 87%

Extraction Method: EPA 3546
Extraction Date: 04/25/18 08:32

Parameter	Result	Qualifier	Units	RL	MDL	Dilution Factor
MCP PAHs - Westborough Lab						
Acenaphthene	ND		ug/kg	150	--	1
Fluoranthene	ND		ug/kg	110	--	1
Naphthalene	ND		ug/kg	190	--	1
Benzo(a)anthracene	ND		ug/kg	110	--	1
Benzo(a)pyrene	ND		ug/kg	150	--	1
Benzo(b)fluoranthene	ND		ug/kg	110	--	1
Benzo(k)fluoranthene	ND		ug/kg	110	--	1
Chrysene	ND		ug/kg	110	--	1
Acenaphthylene	ND		ug/kg	150	--	1
Anthracene	ND		ug/kg	110	--	1
Benzo(ghi)perylene	ND		ug/kg	150	--	1
Fluorene	ND		ug/kg	190	--	1
Phenanthrene	ND		ug/kg	110	--	1
Dibenzo(a,h)anthracene	ND		ug/kg	110	--	1
Indeno(1,2,3-cd)pyrene	ND		ug/kg	150	--	1
Pyrene	ND		ug/kg	110	--	1
2-Methylnaphthalene	ND		ug/kg	230	--	1

Surrogate	% Recovery	Qualifier	Acceptance Criteria
Nitrobenzene-d5	84		30-130
2-Fluorobiphenyl	73		30-130
4-Terphenyl-d14	53		30-130

Project Name: FULLER MIDDLE SCHOOL
Project Number: 6473

Lab Number: L1814382
Report Date: 05/03/18

Method Blank Analysis
Batch Quality Control

Analytical Method: 97,8270D
Analytical Date: 04/25/18 18:37
Analyst: PS

Extraction Method: EPA 3546
Extraction Date: 04/25/18 08:32

Parameter	Result	Qualifier	Units	RL	MDL
MCP Semivolatile Organics - Westborough Lab for sample(s): 01,03-04 Batch: WG1109584-1					
Acenaphthene	ND		ug/kg	130	--
Fluoranthene	ND		ug/kg	100	--
Naphthalene	ND		ug/kg	160	--
Benzo(a)anthracene	ND		ug/kg	100	--
Benzo(a)pyrene	ND		ug/kg	130	--
Benzo(b)fluoranthene	ND		ug/kg	100	--
Benzo(k)fluoranthene	ND		ug/kg	100	--
Chrysene	ND		ug/kg	100	--
Acenaphthylene	ND		ug/kg	130	--
Anthracene	ND		ug/kg	100	--
Benzo(ghi)perylene	ND		ug/kg	130	--
Fluorene	ND		ug/kg	160	--
Phenanthrene	ND		ug/kg	100	--
Dibenzo(a,h)anthracene	ND		ug/kg	100	--
Indeno(1,2,3-cd)pyrene	ND		ug/kg	130	--
Pyrene	ND		ug/kg	100	--
2-Methylnaphthalene	ND		ug/kg	200	--

Surrogate	%Recovery	Qualifier	Acceptance Criteria
Nitrobenzene-d5	90		30-130
2-Fluorobiphenyl	93		30-130
4-Terphenyl-d14	97		30-130

Lab Control Sample Analysis
Batch Quality Control

Project Name: FULLER MIDDLE SCHOOL
Project Number: 6473

Lab Number: L1814382
Report Date: 05/03/18

Parameter	LCS %Recovery	Qual	LCSD %Recovery	Qual	%Recovery Limits	RPD	Qual	RPD Limits
MCP Semivolatile Organics - Westborough Lab Associated sample(s): 01,03-04 Batch: WG1109584-2 WG1109584-3								
Acenaphthene	82		82		40-140	0		30
Fluoranthene	86		88		40-140	2		30
Naphthalene	82		83		40-140	1		30
Benzo(a)anthracene	86		86		40-140	0		30
Benzo(a)pyrene	89		89		40-140	0		30
Benzo(b)fluoranthene	80		83		40-140	4		30
Benzo(k)fluoranthene	94		97		40-140	3		30
Chrysene	81		84		40-140	4		30
Acenaphthylene	81		88		40-140	8		30
Anthracene	88		87		40-140	1		30
Benzo(ghi)perylene	84		84		40-140	0		30
Fluorene	84		87		40-140	4		30
Phenanthrene	83		82		40-140	1		30
Dibenzo(a,h)anthracene	86		88		40-140	2		30
Indeno(1,2,3-cd)pyrene	90		88		40-140	2		30
Pyrene	84		83		40-140	1		30
2-Methylnaphthalene	83		84		40-140	1		30

Lab Control Sample Analysis

Batch Quality Control

Project Name: FULLER MIDDLE SCHOOL

Project Number: 6473

Lab Number: L1814382

Report Date: 05/03/18

Parameter	LCS %Recovery	Qual	LCSD %Recovery	Qual	%Recovery Limits	RPD	Qual	RPD Limits
MCP Semivolatile Organics - Westborough Lab Associated sample(s): 01,03-04 Batch: WG1109584-2 WG1109584-3								

Surrogate	LCS %Recovery	Qual	LCSD %Recovery	Qual	Acceptance Criteria
Nitrobenzene-d5	90		88		30-130
2-Fluorobiphenyl	80		90		30-130
4-Terphenyl-d14	87		88		30-130

PETROLEUM HYDROCARBONS

Project Name: FULLER MIDDLE SCHOOL
Project Number: 6473
Lab Number: L1814382
Report Date: 05/03/18

SAMPLE RESULTS

Lab ID:	L1814382-02	Date Collected:	04/24/18 13:00
Client ID:	B-105, S-2	Date Received:	04/24/18
Sample Location:	FRAMINGHAM, MA	Field Prep:	Not Specified
Sample Depth:	2-4		
Matrix:	Fill	Extraction Method:	EPA 3546
Analytical Method:	98,EPH-04-1.1	Extraction Date:	05/02/18 14:51
Analytical Date:	05/03/18 09:58	Cleanup Method1:	EPH-04-1
Analyst:	MEO	Cleanup Date1:	05/02/18
Percent Solids:	86%		

Quality Control Information

Condition of sample received:	Satisfactory
Sample Temperature upon receipt:	Received on Ice
Sample Extraction method:	Extracted Per the Method

Parameter	Result	Qualifier	Units	RL	MDL	Dilution Factor
Extractable Petroleum Hydrocarbons - Westborough Lab						
C9-C18 Aliphatics	ND		mg/kg	7.77	--	1
C19-C36 Aliphatics	36.2		mg/kg	7.77	--	1
C11-C22 Aromatics	56.8		mg/kg	7.77	--	1
C11-C22 Aromatics, Adjusted	56.8		mg/kg	7.77	--	1
Naphthalene	ND		mg/kg	0.388	--	1
2-Methylnaphthalene	ND		mg/kg	0.388	--	1
Acenaphthylene	ND		mg/kg	0.388	--	1
Acenaphthene	ND		mg/kg	0.388	--	1
Fluorene	ND		mg/kg	0.388	--	1
Phenanthrene	ND		mg/kg	0.388	--	1
Anthracene	ND		mg/kg	0.388	--	1
Fluoranthene	ND		mg/kg	0.388	--	1
Pyrene	ND		mg/kg	0.388	--	1
Benzo(a)anthracene	ND		mg/kg	0.388	--	1
Chrysene	ND		mg/kg	0.388	--	1
Benzo(b)fluoranthene	ND		mg/kg	0.388	--	1
Benzo(k)fluoranthene	ND		mg/kg	0.388	--	1
Benzo(a)pyrene	ND		mg/kg	0.388	--	1
Indeno(1,2,3-cd)Pyrene	ND		mg/kg	0.388	--	1
Dibenzo(a,h)anthracene	ND		mg/kg	0.388	--	1
Benzo(ghi)perylene	ND		mg/kg	0.388	--	1

Project Name: FULLER MIDDLE SCHOOL **Lab Number:** L1814382

Project Number: 6473 **Report Date:** 05/03/18

SAMPLE RESULTS

Lab ID:	L1814382-02	Date Collected:	04/24/18 13:00
Client ID:	B-105, S-2	Date Received:	04/24/18
Sample Location:	FRAMINGHAM, MA	Field Prep:	Not Specified
Sample Depth:	2-4		

Parameter	Result	Qualifier	Units	RL	MDL	Dilution Factor

Extractable Petroleum Hydrocarbons - Westborough Lab

Surrogate	% Recovery	Qualifier	Acceptance Criteria
Chloro-Octadecane	70		40-140
o-Terphenyl	88		40-140
2-Fluorobiphenyl	90		40-140
2-Bromonaphthalene	91		40-140

Project Name: FULLER MIDDLE SCHOOL
Project Number: 6473

Lab Number: L1814382
Report Date: 05/03/18

Method Blank Analysis
Batch Quality Control

Analytical Method: 98,EPH-04-1.1
Analytical Date: 05/03/18 11:34
Analyst: MEO

Extraction Method: EPA 3546
Extraction Date: 05/02/18 14:51
Cleanup Method: EPH-04-1
Cleanup Date: 05/02/18

Parameter	Result	Qualifier	Units	RL	MDL
Extractable Petroleum Hydrocarbons - Westborough Lab for sample(s): 02 Batch: WG1111898-1					
C9-C18 Aliphatics	ND		mg/kg	6.48	--
C19-C36 Aliphatics	ND		mg/kg	6.48	--
C11-C22 Aromatics	ND		mg/kg	6.48	--
C11-C22 Aromatics, Adjusted	ND		mg/kg	6.48	--
Naphthalene	ND		mg/kg	0.324	--
2-Methylnaphthalene	ND		mg/kg	0.324	--
Acenaphthylene	ND		mg/kg	0.324	--
Acenaphthene	ND		mg/kg	0.324	--
Fluorene	ND		mg/kg	0.324	--
Phenanthrene	ND		mg/kg	0.324	--
Anthracene	ND		mg/kg	0.324	--
Fluoranthene	ND		mg/kg	0.324	--
Pyrene	ND		mg/kg	0.324	--
Benzo(a)anthracene	ND		mg/kg	0.324	--
Chrysene	ND		mg/kg	0.324	--
Benzo(b)fluoranthene	ND		mg/kg	0.324	--
Benzo(k)fluoranthene	ND		mg/kg	0.324	--
Benzo(a)pyrene	ND		mg/kg	0.324	--
Indeno(1,2,3-cd)Pyrene	ND		mg/kg	0.324	--
Dibenzo(a,h)anthracene	ND		mg/kg	0.324	--
Benzo(ghi)perylene	ND		mg/kg	0.324	--

Surrogate	%Recovery	Qualifier	Acceptance Criteria
Chloro-Octadecane	77		40-140
o-Terphenyl	85		40-140
2-Fluorobiphenyl	89		40-140
2-Bromonaphthalene	90		40-140

Lab Control Sample Analysis
Batch Quality Control

Project Name: FULLER MIDDLE SCHOOL
Project Number: 6473

Lab Number: L1814382
Report Date: 05/03/18

Parameter	LCS %Recovery	Qual	LCSD %Recovery	Qual	%Recovery Limits	RPD	Qual	RPD Limits
Extractable Petroleum Hydrocarbons - Westborough Lab Associated sample(s): 02 Batch: WG1111898-2 WG1111898-3								
C9-C18 Aliphatics	71		76		40-140	7		25
C19-C36 Aliphatics	84		91		40-140	8		25
C11-C22 Aromatics	70		88		40-140	23		25
Naphthalene	56		73		40-140	**26**	Q	25
2-Methylnaphthalene	57		74		40-140	**26**	Q	25
Acenaphthylene	60		79		40-140	**27**	Q	25
Acenaphthene	62		81		40-140	**27**	Q	25
Fluorene	64		83		40-140	**26**	Q	25
Phenanthrene	67		85		40-140	24		25
Anthracene	67		84		40-140	23		25
Fluoranthene	70		90		40-140	25		25
Pyrene	72		92		40-140	24		25
Benzo(a)anthracene	70		90		40-140	25		25
Chrysene	74		95		40-140	25		25
Benzo(b)fluoranthene	72		92		40-140	24		25
Benzo(k)fluoranthene	72		90		40-140	22		25
Benzo(a)pyrene	68		86		40-140	23		25
Indeno(1,2,3-cd)Pyrene	69		87		40-140	23		25
Dibenzo(a,h)anthracene	75		95		40-140	24		25
Benzo(ghi)perylene	67		85		40-140	24		25
Nonane (C9)	57		61		30-140	7		25
Decane (C10)	64		69		40-140	8		25
Dodecane (C12)	68		73		40-140	7		25

Lab Control Sample Analysis
Batch Quality Control

Project Name: FULLER MIDDLE SCHOOL
Project Number: 6473
Lab Number: L1814382
Report Date: 05/03/18

Parameter	LCS %Recovery	Qual	LCSD %Recovery	Qual	%Recovery Limits	RPD	Qual	RPD Limits
Extractable Petroleum Hydrocarbons - Westborough Lab Associated sample(s): 02 Batch: WG1111898-2 WG1111898-3								
Tetradecane (C14)	70		78		40-140	11		25
Hexadecane (C16)	75		81		40-140	8		25
Octadecane (C18)	79		85		40-140	7		25
Nonadecane (C19)	80		86		40-140	7		25
Eicosane (C20)	81		87		40-140	7		25
Docosane (C22)	82		88		40-140	7		25
Tetracosane (C24)	82		89		40-140	8		25
Hexacosane (C26)	82		89		40-140	8		25
Octacosane (C28)	82		90		40-140	9		25
Triacontane (C30)	82		89		40-140	8		25
Hexatriacontane (C36)	80		88		40-140	10		25

Surrogate	LCS %Recovery	Qual	LCSD %Recovery	Qual	Acceptance Criteria
Chloro-Octadecane	75		80		40-140
o-Terphenyl	68		86		40-140
2-Fluorobiphenyl	66		87		40-140
2-Bromonaphthalene	67		88		40-140
% Naphthalene Breakthrough	0		0		
% 2-Methylnaphthalene Breakthrough	0		0		

METALS

Project Name: FULLER MIDDLE SCHOOL
Lab Number: L1814382
Project Number: 6473
Report Date: 05/03/18

SAMPLE RESULTS

Lab ID: L1814382-01
Client ID: B-105 (COMP)
Sample Location: FRAMINGHAM, MA

Date Collected: 04/24/18 13:00
Date Received: 04/24/18
Field Prep: Not Specified

Sample Depth: 0-4
Matrix: Fill
Percent Solids: 84%

Parameter	Result	Qualifier	Units	RL	MDL	Dilution Factor	Date Prepared	Date Analyzed	Prep Method	Analytical Method	Analyst
MCP Total Metals - Mansfield Lab											
Arsenic, Total	2.87		mg/kg	0.448	--	1	04/25/18 21:21	04/26/18 15:29	EPA 3050B	97,6010C	AB
Barium, Total	31.0		mg/kg	0.448	--	1	04/25/18 21:21	04/26/18 15:29	EPA 3050B	97,6010C	AB
Cadmium, Total	0.453		mg/kg	0.448	--	1	04/25/18 21:21	04/26/18 15:29	EPA 3050B	97,6010C	AB
Chromium, Total	14.7		mg/kg	0.448	--	1	04/25/18 21:21	04/26/18 15:29	EPA 3050B	97,6010C	AB
Lead, Total	10.7		mg/kg	2.24	--	1	04/25/18 21:21	04/26/18 15:29	EPA 3050B	97,6010C	AB
Mercury, Total	ND		mg/kg	0.075	--	1	04/26/18 07:30	04/26/18 14:25	EPA 7471B	97,7471B	MG
Selenium, Total	ND		mg/kg	2.24	--	1	04/25/18 21:21	04/26/18 15:29	EPA 3050B	97,6010C	AB
Silver, Total	ND		mg/kg	0.448	--	1	04/25/18 21:21	04/26/18 15:29	EPA 3050B	97,6010C	AB

Project Name: FULLER MIDDLE SCHOOL
Lab Number: L1814382
Project Number: 6473
Report Date: 05/03/18

SAMPLE RESULTS

Lab ID: L1814382-03
Client ID: B-101 (COMP)
Sample Location: FRAMINGHAM, MA

Date Collected: 04/24/18 13:00
Date Received: 04/24/18
Field Prep: Not Specified

Sample Depth: 0-5
Matrix: Fill
Percent Solids: 85%

Parameter	Result	Qualifier	Units	RL	MDL	Dilution Factor	Date Prepared	Date Analyzed	Prep Method	Analytical Method	Analyst
MCP Total Metals - Mansfield Lab											
Arsenic, Total	6.11		mg/kg	0.459	--	1	04/25/18 21:21	04/26/18 15:34	EPA 3050B	97,6010C	AB
Barium, Total	25.0		mg/kg	0.459	--	1	04/25/18 21:21	04/26/18 15:34	EPA 3050B	97,6010C	AB
Cadmium, Total	ND		mg/kg	0.459	--	1	04/25/18 21:21	04/26/18 15:34	EPA 3050B	97,6010C	AB
Chromium, Total	10.1		mg/kg	0.459	--	1	04/25/18 21:21	04/26/18 15:34	EPA 3050B	97,6010C	AB
Lead, Total	3.91		mg/kg	2.29	--	1	04/25/18 21:21	04/26/18 15:34	EPA 3050B	97,6010C	AB
Mercury, Total	ND		mg/kg	0.075	--	1	04/26/18 07:30	04/26/18 14:30	EPA 7471B	97,7471B	MG
Selenium, Total	ND		mg/kg	2.29	--	1	04/25/18 21:21	04/26/18 15:34	EPA 3050B	97,6010C	AB
Silver, Total	ND		mg/kg	0.459	--	1	04/25/18 21:21	04/26/18 15:34	EPA 3050B	97,6010C	AB

Project Name: FULLER MIDDLE SCHOOL
Lab Number: L1814382
Project Number: 6473
Report Date: 05/03/18

SAMPLE RESULTS

Lab ID: L1814382-04
Client ID: B-102 (COMP)
Sample Location: FRAMINGHAM, MA

Date Collected: 04/24/18 13:00
Date Received: 04/24/18
Field Prep: Not Specified

Sample Depth: 0-6
Matrix: Fill
Percent Solids: 87%

Parameter	Result	Qualifier	Units	RL	MDL	Dilution Factor	Date Prepared	Date Analyzed	Prep Method	Analytical Method	Analyst
MCP Total Metals - Mansfield Lab											
Arsenic, Total	5.06		mg/kg	0.449	--	1	04/25/18 21:21	04/26/18 15:39	EPA 3050B	97,6010C	AB
Barium, Total	27.5		mg/kg	0.449	--	1	04/25/18 21:21	04/26/18 15:39	EPA 3050B	97,6010C	AB
Cadmium, Total	ND		mg/kg	0.449	--	1	04/25/18 21:21	04/26/18 15:39	EPA 3050B	97,6010C	AB
Chromium, Total	11.1		mg/kg	0.449	--	1	04/25/18 21:21	04/26/18 15:39	EPA 3050B	97,6010C	AB
Lead, Total	3.94		mg/kg	2.24	--	1	04/25/18 21:21	04/26/18 15:39	EPA 3050B	97,6010C	AB
Mercury, Total	ND		mg/kg	0.074	--	1	04/26/18 07:30	04/26/18 14:32	EPA 7471B	97,7471B	MG
Selenium, Total	ND		mg/kg	2.24	--	1	04/25/18 21:21	04/26/18 15:39	EPA 3050B	97,6010C	AB
Silver, Total	ND		mg/kg	0.449	--	1	04/25/18 21:21	04/26/18 15:39	EPA 3050B	97,6010C	AB

Project Name: FULLER MIDDLE SCHOOL **Lab Number:** L1814382

Project Number: 6473 **Report Date:** 05/03/18

Method Blank Analysis
Batch Quality Control

Parameter	Result	Qualifier	Units	RL	MDL	Dilution Factor	Date Prepared	Date Analyzed	Analytical Method	Analyst
MCP Total Metals - Mansfield Lab for sample(s): 01,03-04 Batch: WG1109797-1										
Arsenic, Total	ND		mg/kg	0.400	--	1	04/25/18 21:21	04/26/18 12:42	97,6010C	PE
Barium, Total	ND		mg/kg	0.400	--	1	04/25/18 21:21	04/26/18 12:42	97,6010C	PE
Cadmium, Total	ND		mg/kg	0.400	--	1	04/25/18 21:21	04/26/18 12:42	97,6010C	PE
Chromium, Total	ND		mg/kg	0.400	--	1	04/25/18 21:21	04/26/18 12:42	97,6010C	PE
Lead, Total	ND		mg/kg	2.00	--	1	04/25/18 21:21	04/26/18 12:42	97,6010C	PE
Selenium, Total	ND		mg/kg	2.00	--	1	04/25/18 21:21	04/26/18 12:42	97,6010C	PE
Silver, Total	ND		mg/kg	0.400	--	1	04/25/18 21:21	04/26/18 12:42	97,6010C	PE

Prep Information

Digestion Method: EPA 3050B

Parameter	Result	Qualifier	Units	RL	MDL	Dilution Factor	Date Prepared	Date Analyzed	Analytical Method	Analyst
MCP Total Metals - Mansfield Lab for sample(s): 01,03-04 Batch: WG1109930-1										
Mercury, Total	ND		mg/kg	0.083	--	1	04/26/18 07:30	04/26/18 13:41	97,7471B	MG

Prep Information

Digestion Method: EPA 7471B

Lab Control Sample Analysis
Batch Quality Control

Project Name: FULLER MIDDLE SCHOOL
Project Number: 6473

Lab Number: L1814382
Report Date: 05/03/18

Parameter	LCS %Recovery	Qual	LCSD %Recovery	Qual	%Recovery Limits	RPD	Qual	RPD Limits
MCP Total Metals - Mansfield Lab Associated sample(s): 01,03-04 Batch: WG1109797-2 WG1109797-3 SRM Lot Number: D098-540								
Arsenic, Total	111		113		83-117	2		30
Barium, Total	103		101		82-118	2		30
Cadmium, Total	102		102		82-117	0		30
Chromium, Total	107		105		83-119	2		30
Lead, Total	101		104		82-117	3		30
Selenium, Total	108		110		78-121	2		30
Silver, Total	112		112		80-120	0		30
MCP Total Metals - Mansfield Lab Associated sample(s): 01,03-04 Batch: WG1109930-2 WG1109930-3 SRM Lot Number: D098-540								
Mercury, Total	102		91		50-149	11		30

INORGANICS
&
MISCELLANEOUS

Project Name: FULLER MIDDLE SCHOOL
Project Number: 6473

Lab Number: L1814382
Report Date: 05/03/18

SAMPLE RESULTS

Lab ID: L1814382-01
Client ID: B-105 (COMP)
Sample Location: FRAMINGHAM, MA

Date Collected: 04/24/18 13:00
Date Received: 04/24/18
Field Prep: Not Specified

Sample Depth: 0-4
Matrix: Fill

Parameter	Result	Qualifier	Units	RL	MDL	Dilution Factor	Date Prepared	Date Analyzed	Analytical Method	Analyst
General Chemistry - Westborough Lab										
Solids, Total	84.1		%	0.100	NA	1	-	04/26/18 09:48	121,2540G	RI

Project Name: FULLER MIDDLE SCHOOL
Project Number: 6473

Lab Number: L1814382
Report Date: 05/03/18

SAMPLE RESULTS

Lab ID: L1814382-02
Client ID: B-105, S-2
Sample Location: FRAMINGHAM, MA

Date Collected: 04/24/18 13:00
Date Received: 04/24/18
Field Prep: Not Specified

Sample Depth: 2-4
Matrix: Fill

Parameter	Result	Qualifier	Units	RL	MDL	Dilution Factor	Date Prepared	Date Analyzed	Analytical Method	Analyst
General Chemistry - Westborough Lab										
Solids, Total	85.6		%	0.100	NA	1	-	04/25/18 12:23	121,2540G	RI

Project Name: FULLER MIDDLE SCHOOL
Project Number: 6473

Lab Number: L1814382
Report Date: 05/03/18

SAMPLE RESULTS

Lab ID: L1814382-03
Client ID: B-101 (COMP)
Sample Location: FRAMINGHAM, MA

Date Collected: 04/24/18 13:00
Date Received: 04/24/18
Field Prep: Not Specified

Sample Depth: 0-5
Matrix: Fill

Parameter	Result	Qualifier	Units	RL	MDL	Dilution Factor	Date Prepared	Date Analyzed	Analytical Method	Analyst
General Chemistry - Westborough Lab										
Solids, Total	85.3		%	0.100	NA	1	-	04/26/18 09:48	121,2540G	RI

Project Name: FULLER MIDDLE SCHOOL
Project Number: 6473

Lab Number: L1814382
Report Date: 05/03/18

SAMPLE RESULTS

Lab ID: L1814382-04
Client ID: B-102 (COMP)
Sample Location: FRAMINGHAM, MA

Date Collected: 04/24/18 13:00
Date Received: 04/24/18
Field Prep: Not Specified

Sample Depth: 0-6
Matrix: Fill

Parameter	Result	Qualifier	Units	RL	MDL	Dilution Factor	Date Prepared	Date Analyzed	Analytical Method	Analyst
General Chemistry - Westborough Lab										
Solids, Total	86.8		%	0.100	NA	1	-	04/26/18 09:48	121,2540G	RI

Project Name: FULLER MIDDLE SCHOOL
Project Number: 6473

Lab Number: L1814382
Report Date: 05/03/18

Sample Receipt and Container Information

Were project specific reporting limits specified? YES

Cooler Information

Cooler	Custody Seal
A	Absent

Container Information

Container ID	Container Type	Cooler	Initial pH	Final pH	Temp deg C	Pres	Seal	Frozen Date/Time	Analysis(*)
L1814382-01A	Glass 60ml unpreserved split	A	NA		2.4	Y	Absent		MCP-CR-6010T-10(180),MCP-AS-6010T-10(180),MCP-7471T-10(28),MCP-CD-6010T-10(180),MCP-AG-6010T-10(180),MCP-SE-6010T-10(180),MCP-BA-6010T-10(180),MCP-PB-6010T-10(180)
L1814382-01B	Glass 500ml/16oz unpreserved	A	NA		2.4	Y	Absent		TS(7),MCP-PAH-10(14)
L1814382-02A	Vial MeOH preserved	A	NA		2.4	Y	Absent		MCP-8260HLW-10(14)
L1814382-02B	Vial water preserved	A	NA		2.4	Y	Absent	25-APR-18 01:30	MCP-8260HLW-10(14)
L1814382-02C	Vial water preserved	A	NA		2.4	Y	Absent	25-APR-18 01:30	MCP-8260HLW-10(14)
L1814382-02D	Glass 120ml/4oz unpreserved	A	NA		2.4	Y	Absent		TS(7),EPH-DELUX-10(14)
L1814382-03A	Glass 60ml unpreserved split	A	NA		2.4	Y	Absent		MCP-CR-6010T-10(180),MCP-AS-6010T-10(180),MCP-7471T-10(28),MCP-CD-6010T-10(180),MCP-AG-6010T-10(180),MCP-SE-6010T-10(180),MCP-BA-6010T-10(180),MCP-PB-6010T-10(180)
L1814382-03B	Glass 500ml/16oz unpreserved	A	NA		2.4	Y	Absent		TS(7),MCP-PAH-10(14)
L1814382-04A	Glass 60ml unpreserved split	A	NA		2.4	Y	Absent		MCP-CR-6010T-10(180),MCP-AS-6010T-10(180),MCP-7471T-10(28),MCP-CD-6010T-10(180),MCP-AG-6010T-10(180),MCP-SE-6010T-10(180),MCP-BA-6010T-10(180),MCP-PB-6010T-10(180)
L1814382-04B	Glass 500ml/16oz unpreserved	A	NA		2.4	Y	Absent		TS(7),MCP-PAH-10(14)

*Values in parentheses indicate holding time in days

Project Name:	FULLER MIDDLE SCHOOL	**Lab Number:**	L1814382
Project Number:	6473	**Report Date:**	05/03/18

GLOSSARY

Acronyms

EDL	- Estimated Detection Limit: This value represents the level to which target analyte concentrations are reported as estimated values, when those target analyte concentrations are quantified below the reporting limit (RL). The EDL includes any adjustments from dilutions, concentrations or moisture content, where applicable. The use of EDLs is specific to the analysis of PAHs using Solid-Phase Microextraction (SPME).
EPA	- Environmental Protection Agency.
LCS	- Laboratory Control Sample: A sample matrix, free from the analytes of interest, spiked with verified known amounts of analytes or a material containing known and verified amounts of analytes.
LCSD	- Laboratory Control Sample Duplicate: Refer to LCS.
LFB	- Laboratory Fortified Blank: A sample matrix, free from the analytes of interest, spiked with verified known amounts of analytes or a material containing known and verified amounts of analytes.
MDL	- Method Detection Limit: This value represents the level to which target analyte concentrations are reported as estimated values, when those target analyte concentrations are quantified below the reporting limit (RL). The MDL includes any adjustments from dilutions, concentrations or moisture content, where applicable.
MS	- Matrix Spike Sample: A sample prepared by adding a known mass of target analyte to a specified amount of matrix sample for which an independent estimate of target analyte concentration is available.
MSD	- Matrix Spike Sample Duplicate: Refer to MS.
NA	- Not Applicable.
NC	- Not Calculated: Term is utilized when one or more of the results utilized in the calculation are non-detect at the parameter's reporting unit.
NDPA/DPA	- N-Nitrosodiphenylamine/Diphenylamine.
NI	- Not Ignitable.
NP	- Non-Plastic: Term is utilized for the analysis of Atterberg Limits in soil.
RL	- Reporting Limit: The value at which an instrument can accurately measure an analyte at a specific concentration. The RL includes any adjustments from dilutions, concentrations or moisture content, where applicable.
RPD	- Relative Percent Difference: The results from matrix and/or matrix spike duplicates are primarily designed to assess the precision of analytical results in a given matrix and are expressed as relative percent difference (RPD). Values which are less than five times the reporting limit for any individual parameter are evaluated by utilizing the absolute difference between the values; although the RPD value will be provided in the report.
SRM	- Standard Reference Material: A reference sample of a known or certified value that is of the same or similar matrix as the associated field samples.
STLP	- Semi-dynamic Tank Leaching Procedure per EPA Method 1315.
TIC	- Tentatively Identified Compound: A compound that has been identified to be present and is not part of the target compound list (TCL) for the method and/or program. All TICs are qualitatively identified and reported as estimated concentrations.

Footnotes

1	- The reference for this analyte should be considered modified since this analyte is absent from the target analyte list of the original method.

Terms

Analytical Method: Both the document from which the method originates and the analytical reference method. (Example: EPA 8260B is shown as 1,8260B.) The codes for the reference method documents are provided in the References section of the Addendum.

Final pH: As it pertains to Sample Receipt & Container Information section of the report, Final pH reflects pH of container determined after adjustment at the laboratory, if applicable. If no adjustment required, value reflects Initial pH.

Frozen Date/Time: With respect to Volatile Organics in soil, Frozen Date/Time reflects the date/time at which associated Reagent Water-preserved vials were initially frozen. Note: If frozen date/time is beyond 48 hours from sample collection, value will be reflected in 'bold'.

Initial pH: As it pertains to Sample Receipt & Container Information section of the report, Initial pH reflects pH of container determined upon receipt, if applicable.

Total: With respect to Organic analyses, a 'Total' result is defined as the summation of results for individual isomers or Aroclors. If a 'Total' result is requested, the results of its individual components will also be reported. This is applicable to 'Total' results for methods 8260, 8081 and 8082.

Data Qualifiers

A	- Spectra identified as "Aldol Condensation Product".
B	- The analyte was detected above the reporting limit in the associated method blank. Flag only applies to associated field samples that have detectable concentrations of the analyte at less than ten times (10x) the concentration found in the blank. For MCP-related

Project Name:	FULLER MIDDLE SCHOOL	**Lab Number:**	L1814382
Project Number:	6473	**Report Date:**	05/03/18

Data Qualifiers

projects, flag only applies to associated field samples that have detectable concentrations of the analyte at less than ten times (10x) the concentration found in the blank. For DOD-related projects, flag only applies to associated field samples that have detectable concentrations of the analyte at less than ten times (10x) the concentration found in the blank AND the analyte was detected above one-half the reporting limit (or above the reporting limit for common lab contaminants) in the associated method blank. For NJ-Air-related projects, flag only applies to associated field samples that have detectable concentrations of the analyte above the reporting limit. For NJ-related projects (excluding Air), flag only applies to associated field samples that have detectable concentrations of the analyte, which was detected above the reporting limit in the associated method blank or above five times the reporting limit for common lab contaminants (Phthalates, Acetone, Methylene Chloride, 2-Butanone).

C - Co-elution: The target analyte co-elutes with a known lab standard (i.e. surrogate, internal standards, etc.) for co-extracted analyses.

D - Concentration of analyte was quantified from diluted analysis. Flag only applies to field samples that have detectable concentrations of the analyte.

E - Concentration of analyte exceeds the range of the calibration curve and/or linear range of the instrument.

G - The concentration may be biased high due to matrix interferences (i.e, co-elution) with non-target compound(s). The result should be considered estimated.

H - The analysis of pH was performed beyond the regulatory-required holding time of 15 minutes from the time of sample collection.

I - The lower value for the two columns has been reported due to obvious interference.

M - Reporting Limit (RL) exceeds the MCP CAM Reporting Limit for this analyte.

NJ - Presumptive evidence of compound. This represents an estimated concentration for Tentatively Identified Compounds (TICs), where the identification is based on a mass spectral library search.

P - The RPD between the results for the two columns exceeds the method-specified criteria.

Q - The quality control sample exceeds the associated acceptance criteria. For DOD-related projects, LCS and/or Continuing Calibration Standard exceedences are also qualified on all associated sample results. Note: This flag is not applicable for matrix spike recoveries when the sample concentration is greater than 4x the spike added or for batch duplicate RPD when the sample concentrations are less than 5x the RL. (Metals only.)

R - Analytical results are from sample re-analysis.

RE - Analytical results are from sample re-extraction.

S - Analytical results are from modified screening analysis.

J - Estimated value. This represents an estimated concentration for Tentatively Identified Compounds (TICs).

ND - Not detected at the reporting limit (RL) for the sample.

Report Format: Data Usability Report

Project Name:	FULLER MIDDLE SCHOOL	**Lab Number:**	L1814382
Project Number:	6473	**Report Date:**	05/03/18

REFERENCES

97 EPA Test Methods (SW-846) with QC Requirements & Performance Standards for the Analysis of EPA SW-846 Methods under the Massachusetts Contingency Plan, WSC-CAM-IIA, IIB, IIIA, IIIB, IIIC, IIID, VA, VB, VC, VIA, VIB, VIIIA and VIIIB, July 2010.

98 Method for the Determination of Extractable Petroleum Hydrocarbons (EPH), MassDEP, May 2004, Revision 1.1 with QC Requirements & Performance Standards for the Analysis of EPH under the Massachusetts Contingency Plan, WSC-CAM-IVB, July 2010.

121 Standard Methods for the Examination of Water and Wastewater. APHA-AWWA-WEF. Standard Methods Online.

LIMITATION OF LIABILITIES

Alpha Analytical performs services with reasonable care and diligence normal to the analytical testing laboratory industry. In the event of an error, the sole and exclusive responsibility of Alpha Analytical shall be to re-perform the work at it's own expense. In no event shall Alpha Analytical be held liable for any incidental, consequential or special damages, including but not limited to, damages in any way connected with the use of, interpretation of, information or analysis provided by Alpha Analytical.

We strongly urge our clients to comply with EPA protocol regarding sample volume, preservation, cooling, containers, sampling procedures, holding time and splitting of samples in the field.

Certification Information

The following analytes are not included in our Primary NELAP Scope of Accreditation:

Westborough Facility
EPA 624: m/p-xylene, o-xylene
EPA 8260C: NPW: 1,2,4,5-Tetramethylbenzene; 4-Ethyltoluene, Azobenzene; SCM: Iodomethane (methyl iodide), Methyl methacrylate, 1,2,4,5-Tetramethylbenzene; 4-Ethyltoluene.
EPA 8270D: NPW: Dimethylnaphthalene,1,4-Diphenylhydrazine; SCM: Dimethylnaphthalene,1,4-Diphenylhydrazine.
EPA 300: DW: Bromide
EPA 6860: SCM: Perchlorate
EPA 9010: NPW and SCM: Amenable Cyanide Distillation
SM4500: NPW: Amenable Cyanide, Dissolved Oxygen; SCM: Total Phosphorus, TKN, NO2, NO3.

Mansfield Facility
SM 2540D: TSS
EPA 8082A: NPW: PCB: 1, 5, 31, 87,101, 110, 141, 151, 153, 180, 183, 187.
EPA TO-15: Halothane, 2,4,4-Trimethyl-2-pentene, 2,4,4-Trimethyl-1-pentene, Thiophene, 2-Methylthiophene, 3-Methylthiophene, 2-Ethylthiophene, 1,2,3-Trimethylbenzene, Indan, Indene, 1,2,4,5-Tetramethylbenzene, Benzothiophene, 1-Methylnaphthalene.
Biological Tissue Matrix: EPA 3050B

The following analytes are included in our Massachusetts DEP Scope of Accreditation

Westborough Facility:

Drinking Water
EPA 300.0: Chloride, Nitrate-N, Fluoride, Sulfate; **EPA 353.2**: Nitrate-N, Nitrite-N; **SM4500NO3-F**: Nitrate-N, Nitrite-N; **SM4500F-C, SM4500CN-CE, EPA 180.1, SM2130B, SM4500Cl-D, SM2320B, SM2540C, SM4500H-B**
EPA 332: Perchlorate; **EPA 524.2:** THMs and VOCs; **EPA 504.1:** EDB, DBCP.
Microbiology: **SM9215B; SM9223-P/A, SM9223B-Colilert-QT,SM9222D**.

Non-Potable Water
SM4500H,B, EPA 120.1, SM2510B, SM2540C, SM2320B, SM4500CL-E, SM4500F-BC, SM4500NH3-BH: Ammonia-N and Kjeldahl-N, **EPA 350.1**: Ammonia-N, **LACHAT 10-107-06-1-B**: Ammonia-N, **EPA 351.1, SM4500NO3-F, EPA 353.2**: Nitrate-N**, EPA 351.1, SM4500P-E, SM4500P-B, E, SM4500SO4-E, SM5220D, EPA 410.4, SM5210B, SM5310C, SM4500CL-D, EPA 1664, EPA 420.1, SM4500-CN-CE, SM2540D.**
EPA 624: Volatile Halocarbons & Aromatics,
EPA 608: Chlordane, Toxaphene, Aldrin, alpha-BHC, beta-BHC, gamma-BHC, delta-BHC, Dieldrin, DDD, DDE, DDT, Endosulfan I, Endosulfan II, Endosulfan sulfate, Endrin, Endrin Aldehyde, Heptachlor, Heptachlor Epoxide, PCBs
EPA 625: SVOC (Acid/Base/Neutral Extractables), **EPA 600/4-81-045**: PCB-Oil.
Microbiology: **SM9223B-Colilert-QT; Enterolert-QT, SM9221E, SM9222D.**

Mansfield Facility:

Drinking Water
EPA 200.7: Al, Ba, Be, Cd, Cr, Cu, Mn, Ni, Na, Ag, Ca, Zn. **EPA 200.8:** Al, Sb, As, Ba, Be, Cd, Cr, Cu, Pb, Mn, Ni, Se, Ag, TL, Zn. **EPA 245.1** Hg.
EPA 522.

Non-Potable Water
EPA 200.7: Al, Sb, As, Be, Cd, Ca, Cr, Co, Cu, Fe, Pb, Mg, Mn, Mo, Ni, K, Se, Ag, Na, Sr, TL, Ti, V, Zn.
EPA 200.8: Al, Sb, As, Be, Cd, Cr, Cu, Pb, Mn, Ni, Se, Ag, TL, Zn.
EPA 245.1 Hg.
SM2340B

For a complete listing of analytes and methods, please contact your Alpha Project Manager.

CHAIN OF CUSTODY

PAGE ____ OF ____

ALPHA ANALYTICAL
8 Walkup Drive, Westboro, MA 01581, Tel. 508-898-9220
320 Forbes Blvd, Mansfield, MA 02048, Tel. 508-822-9300

Date Rec'd in Lab: 04/24/18

ALPHA Job #: L1814382

Client Information

Client: McPhail Associates, LLC
Address: 2269 Massachusetts Avenue
Cambridge, MA 02140
Phone: (617) 868-1420
Email: @McPhailgeo.com

Project Information

Project Name: FULLER MIDDLE SCHOOL
Project Location: FRAMINGHAM, MA
Project #: 6473
Project Manager: FATIMA BABIC-KONJIC
ALPHA Quote #:

Turn-Around Time

☒ Standard ☐ RUSH (only confirmed if pre-approved!)
Date Due:

Report Information - Data Deliverables

☒ ADEx ☐ EMAIL

Billing Information

☒ Same as Client info PO #:

Regulatory Requirements & Project Information Requirements

☒ Yes ☐ No MA MCP Analytical Methods ☐ Yes ☒ No CT RCP Analytical Methods
☐ Yes ☒ No Matrix Spike Required on this SDG? (Required for MCP Inorganics)
☐ Yes ☒ No GW1 Standards (Info Required for Metals & EPH with Targets)
☐ Yes ☒ No NPDES RGP
☒ Other State /Fed Program MCP Criteria RCS-1

Additional Project Information:
☒ Run TCLP (if triggered)

Sample "Sample ID" Nomenclature: B-100, S-1

ALPHA Lab ID (Lab Use Only)	Sample ID	Sample Depth	Sample Material	Collection Date	Collection Time	Sampler Initials	Soil Assessment Package IV (less VOC)	VOC: ☒ 8260	Total Solids	SVOC: ☒ PAH	EPH: ☒ Ranges & Targets ☐ Ranges Only	VPH: ☐ Ranges & Targets ☐ Ranges Only	TOTAL METALS: ☒ RCRA8 ☐ PP13 ☐ MCP 14	DISSOLVED METALS: ☐ RCRA8 ☐ PP13 ☐ MCP 14	METALS: Total Sb,Be,Ni,Tl,V,Zn	☐ PCBs ☐ Pesticides	RGP Section A Inorganics				SAMPLE INFO Filtration ☐ Field ☐ Lab to do Preservation ☐ Lab to do Sample Comments	TOTAL # BOTTLES
14382-01	B-105 (COMP)	0-4'	F	4/24/18		CC				X			X									1
02	B-105 S2	2'-4'	F	4/24/18		CC		X			X											4
03	B-101 (COMP)	0-5'	F	4/24/18		CC				X			X									1
04	B-102 (COMP)	0-6	F	4/24/18		CC				X			X									1

Container Type
A=Amber glass
B=Bacteria cup
C=Cube
D=BOD bottle
E=Encore
G=Glass
O=Other
P=Plastic
V=Vial

Sample Material
F=Fill S=Sand
O=Organics C=Clay
N=Natural T=Till
GM=Glaciomarine
GW=Groundwater

Preservative
A=None
B=HCl
C=HNO_3
D=H_2SO_4
E=NaOH
F=MeOH
G=$NaHSO_4$
H=$Na_2S_2O_3$
I=Ascorbic Acid
J=NH_4Cl
K=Zn Acetate
O=Other

RGP Section A Inorganics:
Ammonia, Chloride, TRC, TSS, CrVI, CrIII, Total Cyanide, Total RGP Metals

Container Type			
Preservative			

Relinquished By:	Date/Time	Received By:	Date/Time
EKC	4/24 1:00	McPhail Associates secure sample storage for laboratory pick-up	
McPhail Associates secure sample storage for laboratory pick-up		[signature]	4/24/18 1600
[signature]	4/24/18 1800		4-24-18 1800

All samples submitted are subject to Alpha's Terms and Conditions. See reverse side.

DOC ID: 25188 Rev 0 (11/28/2017)

Method Blank Summary
Form 4
VOLATILES

Client	: McPhail Associates	**Lab Number**	: L1814382
Project Name	: FULLER MIDDLE SCHOOL	**Project Number**	: 6473
Lab Sample ID	: WG1110711-5	**Lab File ID**	: V00180427B04
Instrument ID	: VOA100		
Matrix	: SOIL	**Analysis Date**	: 04/27/18 10:50

Client Sample No.	Lab Sample ID	Analysis Date
WG1110711-3LCS	WG1110711-3	04/27/18 09:32
WG1110711-4LCSD	WG1110711-4	04/27/18 09:58
B-105, S-2	L1814382-02	04/27/18 16:28

Continuing Calibration
Form 7

Client	: McPhail Associates	Lab Number	: L1814382
Project Name	: FULLER MIDDLE SCHOOL	Project Number	: 6473
Instrument ID	: VOA100	Calibration Date	: 04/27/18 09:32
Lab File ID	: V00180427B01	Init. Calib. Date(s)	: 03/14/18 03/15/18
Sample No	: WG1110711-2	Init. Calib. Times	: 22:04 01:32
Channel	:		

Compound	Ave. RRF	RRF	Min RRF	%D	Max %D	Area%	Dev(min)
Fluorobenzene	1	1	-	0	20	125	0
Dichlorodifluoromethane	0.177	0.209	-	-18.1	20	142	0
Chloromethane	0.353	0.317	-	10.2	20	118	0
Vinyl chloride	0.286	0.259	-	9.4	20	114	0
Bromomethane	20	17.961	-	10.2	20	150	0
Chloroethane	0.161	0.154	-	4.3	20	117	0
Trichlorofluoromethane	0.279	0.241	-	13.6	20	104	0
Ethyl ether	0.109	0.113	-	-3.7	20	129	0
1,1-Dichloroethene	0.185	0.175	-	5.4	20	116	0
Carbon disulfide	0.689	0.574	-	16.7	20	104	0
Freon-113	0.191	0.177	-	7.3	20	108	0
Methylene chloride	0.252	0.218	-	13.5	20	113	0
Acetone	20	12.905	-	35.5*	20	94	0
trans-1,2-Dichloroethene	0.222	0.206	-	7.2	20	115	0
Methyl acetate	0.17	0.129	-	24.1*	20	98	0
Methyl tert-butyl ether	0.523	0.517	-	1.1	20	123	0
tert-Butyl alcohol	0.021	0.019	-	9.5	20	115	0
Diisopropyl ether	1.107	0.923	-	16.6	20	101	0
1,1-Dichloroethane	0.508	0.446	-	12.2	20	107	0
Halothane	0.154	0.147	-	4.5	20	113	0
Acrylonitrile	0.066	0.063	-	4.5	20	129	-.01
Ethyl tert-butyl ether	0.818	0.716	-	12.5	20	106	0
Vinyl acetate	0.622	0.563	-	9.5	20	116	0
cis-1,2-Dichloroethene	0.234	0.221	-	5.6	20	113	-.01
2,2-Dichloropropane	0.348	0.315	-	9.5	20	109	0
Bromochloromethane	0.097	0.093	-	4.1	20	113	-.01
Cyclohexane	0.497	0.435	-	12.5	20	100	0
Chloroform	0.423	0.388	-	8.3	20	115	0
Ethyl acetate	0.245	0.207	-	15.5	20	109	0
Carbon tetrachloride	0.282	0.258	-	8.5	20	108	0
Tetrahydrofuran	0.069	0.064	-	7.2	20	117	0
Dibromofluoromethane	0.242	0.228	-	5.8	20	117	0
1,1,1-Trichloroethane	0.337	0.306	-	9.2	20	109	-.01
2-Butanone	0.097	0.083	-	14.4	20	116	0
1,1-Dichloropropene	0.309	0.282	-	8.7	20	108	0
Benzene	0.941	0.836	-	11.2	20	111	0
tert-Amyl methyl ether	0.595	0.531	-	10.8	20	109	-.01
1,2-Dichloroethane-d4	0.284	0.255	-	10.2	20	113	0
1,2-Dichloroethane	0.329	0.285	-	13.4	20	107	0
Methyl cyclohexane	0.389	0.349	-	10.3	20	104	-.01
Trichloroethene	0.225	0.209	-	7.1	20	112	0
Dibromomethane	0.124	0.114	-	8.1	20	113	-.01
1,2-Dichloropropane	0.274	0.245	-	10.6	20	108	-.01
2-Chloroethyl vinyl ether	0.118	0.11	-	6.8	20	122	0
Bromodichloromethane	0.302	0.272	-	9.9	20	110	0

* Value outside of QC limits.

Continuing Calibration
Form 7

Client	: McPhail Associates	Lab Number	: L1814382
Project Name	: FULLER MIDDLE SCHOOL	Project Number	: 6473
Instrument ID	: VOA100	Calibration Date	: 04/27/18 09:32
Lab File ID	: V00180427B01	Init. Calib. Date(s)	: 03/14/18 03/15/18
Sample No	: WG1110711-2	Init. Calib. Times	: 22:04 01:32
Channel	:		

Compound	Ave. RRF	RRF	Min RRF	%D	Max %D	Area%	Dev(min)
1,4-Dioxane	0.00156	0.00174	-	-11.5	20	143	0
cis-1,3-Dichloropropene	0.375	0.333	-	11.2	20	111	0
Chlorobenzene-d5	1	1	-	0	20	119	-.01
Toluene-d8	1.484	1.5	-	-1.1	20	120	-.01
Toluene	0.843	0.799	-	5.2	20	112	0
4-Methyl-2-pentanone	0.114	0.106	-	7	20	117	0
Tetrachloroethene	0.272	0.274	-	-0.7	20	110	0
trans-1,3-Dichloropropene	0.466	0.441	-	5.4	20	112	0
Ethyl methacrylate	20	19.469	-	2.7	20	127	0
1,1,2-Trichloroethane	0.214	0.217	-	-1.4	20	115	-.01
Chlorodibromomethane	0.281	0.26	-	7.5	20	109	0
1,3-Dichloropropane	0.454	0.38	-	16.3	20	95	-.01
1,2-Dibromoethane	20	17.751	-	11.2	20	107	-.01
2-Hexanone	0.233	0.189	-	18.9	20	113	-.01
Chlorobenzene	0.88	0.806	-	8.4	20	108	0
Ethylbenzene	1.594	1.425	-	10.6	20	104	0
1,1,1,2-Tetrachloroethane	0.283	0.273	-	3.5	20	109	0
p/m Xylene	0.58	0.504	-	13.1	20	101	0
o Xylene	0.556	0.529	-	4.9	20	108	-.01
Styrene	0.909	0.798	-	12.2	20	102	-.01
1,4-Dichlorobenzene-d4	1	1	-	0	20	126	0
Bromoform	0.32	0.284	-	11.3	20	112	0
Isopropylbenzene	3.132	2.712	-	13.4	20	103	-.01
4-Bromofluorobenzene	1.132	1.007	-	11	20	113	0
Bromobenzene	0.651	0.606	-	6.9	20	114	0
n-Propylbenzene	4.048	3.423	-	15.4	20	103	-.01
1,4-Dichlorobutane	1.194	1.108	-	7.2	20	113	0
1,1,2,2-Tetrachloroethane	0.705	0.601	-	14.8	20	105	0
4-Ethyltoluene	3.362	2.86	-	14.9	20	102	0
2-Chlorotoluene	2.486	2.086	-	16.1	20	107	0
1,3,5-Trimethylbenzene	2.689	2.362	-	12.2	20	107	0
1,2,3-Trichloropropane	0.569	0.476	-	16.3	20	105	0
trans-1,4-Dichloro-2-buten	0.242	0.207	-	14.5	20	113	-.01
4-Chlorotoluene	2.421	2.057	-	15	20	103	0
tert-Butylbenzene	2.123	1.92	-	9.6	20	108	0
1,2,4-Trimethylbenzene	2.64	2.375	-	10	20	107	0
sec-Butylbenzene	3.432	3.054	-	11	20	105	0
p-Isopropyltoluene	2.719	2.495	-	8.2	20	106	0
1,3-Dichlorobenzene	1.326	1.223	-	7.8	20	111	0
1,4-Dichlorobenzene	1.38	1.237	-	10.4	20	112	0
p-Diethylbenzene	1.728	1.553	-	10.1	20	106	0
n-Butylbenzene	2.92	2.568	-	12.1	20	103	0
1,2-Dichlorobenzene	1.207	1.106	-	8.4	20	111	0
1,2,4,5-Tetramethylbenzene	2.636	2.324	-	11.8	20	105	0
1,2-Dibromo-3-chloropropan	0.08	0.068	-	15	20	116	-.01

* Value outside of QC limits.

ANALYTICAL REPORT

Lab Number:	L1829113
Client:	McPhail Associates 2269 Massachusetts Avenue Cambridge, MA 02140
ATTN:	Ambrose Donovan
Phone:	(617) 868-1420
Project Name:	6473-FULLER MIDDLE
Project Number:	6473
Report Date:	08/02/18

The original project report/data package is held by Alpha Analytical. This report/data package is paginated and should be reproduced only in its entirety. Alpha Analytical holds no responsibility for results and/or data that are not consistent with the original.

Certifications & Approvals: MA (M-MA086), NH NELAP (2064), CT (PH-0574), IL (200077), ME (MA00086), MD (348), NJ (MA935), NY (11148), NC (25700/666), PA (68-03671), RI (LAO00065), TX (T104704476), VT (VT-0935), VA (460195), USDA (Permit #P330-17-00196).

Eight Walkup Drive, Westborough, MA 01581-1019
508-898-9220 (Fax) 508-898-9193 800-624-9220 - www.alphalab.com

Project Name: 6473-FULLER MIDDLE
Project Number: 6473

Lab Number: L1829113
Report Date: 08/02/18

Alpha Sample ID	Client ID	Matrix	Sample Location	Collection Date/Time	Receive Date
L1829113-01	B-202, S-3 4-5'	FILL	FRAMINGHAM, MA	07/27/18 08:20	07/27/18
L1829113-02	B-202 0.5-5 FILL	FILL	FRAMINGHAM, MA	07/27/18 08:20	07/27/18
L1829113-03	B-207, S-2 2-4	FILL	FRAMINGHAM, MA	07/27/18 12:00	07/27/18
L1829113-04	B-207 .4-7.5 FILL	FILL	FRAMINGHAM, MA	07/27/18 12:00	07/27/18
L1829113-05	B-206, S-2 2-4	FILL	FRAMINGHAM, MA	07/27/18 10:15	07/27/18
L1829113-06	B-206 0.5-4 FILL	FILL	FRAMINGHAM, MA	07/27/18 10:15	07/27/18
L1829113-07	B-208, S-2 2-4	FILL	FRAMINGHAM, MA	07/27/18 14:10	07/27/18
L1829113-08	B-208 0.6-4 FILL	FILL	FRAMINGHAM, MA	07/27/18 13:10	07/27/18

Project Name: 6473-FULLER MIDDLE **Lab Number:** L1829113

Project Number: 6473 **Report Date:** 08/02/18

MADEP MCP Response Action Analytical Report Certification

This form provides certifications for all samples performed by MCP methods. Please refer to the Sample Results and Container Information sections of this report for specification of MCP methods used for each analysis. The following questions pertain only to MCP Analytical Methods.

An affirmative response to questions A through F is required for "Presumptive Certainty" status		
A	Were all samples received in a condition consistent with those described on the Chain-of-Custody, properly preserved (including temperature) in the field or laboratory, and prepared/analyzed within method holding times?	YES
B	Were the analytical method(s) and all associated QC requirements specified in the selected CAM protocol(s) followed?	YES
C	Were all required corrective actions and analytical response actions specified in the selected CAM protocol(s) implemented for all identified performance standard non-conformances?	YES
D	Does the laboratory report comply with all the reporting requirements specified in CAM VII A, "Quality Assurance and Quality Control Guidelines for the Acquisition and Reporting of Analytical Data?"	YES
E a.	VPH, EPH, and APH Methods only: Was each method conducted without significant modification(s)? (Refer to the individual method(s) for a list of significant modifications).	N/A
E b.	APH and TO-15 Methods only: Was the complete analyte list reported for each method?	N/A
F	Were all applicable CAM protocol QC and performance standard non-conformances identified and evaluated in a laboratory narrative (including all "No" responses to Questions A through E)?	YES

A response to questions G, H and I is required for "Presumptive Certainty" status		
G	Were the reporting limits at or below all CAM reporting limits specified in the selected CAM protocol(s)?	YES
H	Were all QC performance standards specified in the CAM protocol(s) achieved?	NO
I	Were results reported for the complete analyte list specified in the selected CAM protocol(s)?	NO

For any questions answered "No", please refer to the case narrative section on the following page(s).

Please note that sample matrix information is located in the Sample Results section of this report.

Project Name: 6473-FULLER MIDDLE **Lab Number:** L1829113
Project Number: 6473 **Report Date:** 08/02/18

Case Narrative

The samples were received in accordance with the Chain of Custody and no significant deviations were encountered during the preparation or analysis unless otherwise noted. Sample Receipt, Container Information, and the Chain of Custody are located at the back of the report.

Results contained within this report relate only to the samples submitted under this Alpha Lab Number and meet NELAP requirements for all NELAP accredited parameters unless otherwise noted in the following narrative. The data presented in this report is organized by parameter (i.e. VOC, SVOC, etc.). Sample specific Quality Control data (i.e. Surrogate Spike Recovery) is reported at the end of the target analyte list for each individual sample, followed by the Laboratory Batch Quality Control at the end of each parameter. Tentatively Identified Compounds (TICs), if requested, are reported for compounds identified to be present and are not part of the method/program Target Compound List, even if only a subset of the TCL are being reported. If a sample was re-analyzed or re-extracted due to a required quality control corrective action and if both sets of data are reported, the Laboratory ID of the re-analysis or re-extraction is designated with an "R" or "RE", respectively. When multiple Batch Quality Control elements are reported (e.g. more than one LCS), the associated samples for each element are noted in the grey shaded header line of each data table. Any Laboratory Batch, Sample Specific % recovery or RPD value that is outside the listed Acceptance Criteria is bolded in the report. All specific QC information is also incorporated in the Data Usability format of our Data Merger tool where it can be reviewed along with any associated usability implications. Soil/sediments, solids and tissues are reported on a dry weight basis unless otherwise noted. Definitions of all data qualifiers and acronyms used in this report are provided in the Glossary located at the back of the report.

In reference to questions H (CAM) or 4 (RCP) when "NO" is checked, the performance criteria for CAM and RCP methods allow for some quality control failures to occur and still be within method compliance. In these instances the specific failure is not narrated but noted in the associated QC table. The information is also incorporated in the Data Usability format of our Data Merger tool where it can be reviewed along with any associated usability implications.

Please see the associated ADEx data file for a comparison of laboratory reporting limits that were achieved with the regulatory Numerical Standards requested on the Chain of Custody.

HOLD POLICY
For samples submitted on hold, Alpha's policy is to hold samples (with the exception of Air canisters) free of charge for 21 calendar days from the date the project is completed. After 21 calendar days, we will dispose of all samples submitted including those put on hold unless you have contacted your Client Service Representative and made arrangements for Alpha to continue to hold the samples. Air canisters will be disposed after 3 business days from the date the project is completed.

Please contact Client Services at 800-624-9220 with any questions.

Project Name: 6473-FULLER MIDDLE **Lab Number:** L1829113
Project Number: 6473 **Report Date:** 08/02/18

Case Narrative (continued)

MCP Related Narratives

Sample Receipt

L1829113-07: The collection date and time on the chain of custody was 27-JUL-18 13:10; however, the collection date/time on the container label was 27-JUL-18 14:10. At the client's request, the collection date/time is reported as 27-JUL-18 14:10.

L1829113-03: The client ID was specified by the client.

In reference to question H:

A Matrix Spike was not submitted for the analysis of Total Metals.

Volatile Organics

In reference to question H:

The initial calibration, associated with L1829113-01, -03, -05 and -07, did not meet the method required minimum response factor on the lowest calibration standard for 2-butanone (0.074) and 4-methyl-2-pentanone (0.054), as well as the average response factor for 2-butanone and 4-methyl-2-pentanone.

The continuing calibration standard, associated with L1829113-01, -03, -05 and -07, is outside the acceptance criteria for several compounds; however, it is within overall method allowances. A copy of the continuing calibration standard is included as an addendum to this report.

Total Metals

In reference to question I:

All samples were analyzed for a subset of MCP analytes per client request.

I, the undersigned, attest under the pains and penalties of perjury that, to the best of my knowledge and belief and based upon my personal inquiry of those responsible for providing the information contained in this analytical report, such information is accurate and complete. This certificate of analysis is not complete unless this page accompanies any and all pages of this report.

Authorized Signature: Amita Naik

Title: Technical Director/Representative Date: 08/02/18

ORGANICS

VOLATILES

Project Name: 6473-FULLER MIDDLE
Project Number: 6473
Lab Number: L1829113
Report Date: 08/02/18

SAMPLE RESULTS

Lab ID: L1829113-01
Client ID: B-202, S-3 4-5'
Sample Location: FRAMINGHAM, MA

Date Collected: 07/27/18 08:20
Date Received: 07/27/18
Field Prep: Not Specified

Sample Depth: 4-5
Matrix: Fill
Analytical Method: 97,8260C
Analytical Date: 08/01/18 02:58
Analyst: MV
Percent Solids: 80%

Parameter	Result	Qualifier	Units	RL	MDL	Dilution Factor
MCP Volatile Organics by 8260/5035 - Westborough Lab						
Methylene chloride	ND		ug/kg	3.8	--	1
1,1-Dichloroethane	ND		ug/kg	0.77	--	1
Chloroform	ND		ug/kg	1.2	--	1
Carbon tetrachloride	ND		ug/kg	0.77	--	1
1,2-Dichloropropane	ND		ug/kg	0.77	--	1
Dibromochloromethane	ND		ug/kg	0.77	--	1
1,1,2-Trichloroethane	ND		ug/kg	0.77	--	1
Tetrachloroethene	ND		ug/kg	0.38	--	1
Chlorobenzene	ND		ug/kg	0.38	--	1
Trichlorofluoromethane	ND		ug/kg	3.1	--	1
1,2-Dichloroethane	ND		ug/kg	0.77	--	1
1,1,1-Trichloroethane	ND		ug/kg	0.38	--	1
Bromodichloromethane	ND		ug/kg	0.38	--	1
trans-1,3-Dichloropropene	ND		ug/kg	0.77	--	1
cis-1,3-Dichloropropene	ND		ug/kg	0.38	--	1
1,3-Dichloropropene, Total	ND		ug/kg	0.38	--	1
1,1-Dichloropropene	ND		ug/kg	0.38	--	1
Bromoform	ND		ug/kg	3.1	--	1
1,1,2,2-Tetrachloroethane	ND		ug/kg	0.38	--	1
Benzene	ND		ug/kg	0.38	--	1
Toluene	ND		ug/kg	0.77	--	1
Ethylbenzene	ND		ug/kg	0.77	--	1
Chloromethane	ND		ug/kg	3.1	--	1
Bromomethane	ND		ug/kg	1.5	--	1
Vinyl chloride	ND		ug/kg	0.77	--	1
Chloroethane	ND		ug/kg	1.5	--	1
1,1-Dichloroethene	ND		ug/kg	0.77	--	1
trans-1,2-Dichloroethene	ND		ug/kg	1.2	--	1

Project Name: 6473-FULLER MIDDLE **Lab Number:** L1829113

Project Number: 6473 **Report Date:** 08/02/18

SAMPLE RESULTS

Lab ID: L1829113-01 Date Collected: 07/27/18 08:20

Client ID: B-202, S-3 4-5' Date Received: 07/27/18

Sample Location: FRAMINGHAM, MA Field Prep: Not Specified

Sample Depth: 4-5

Parameter	Result	Qualifier	Units	RL	MDL	Dilution Factor
MCP Volatile Organics by 8260/5035 - Westborough Lab						
Trichloroethene	ND		ug/kg	0.38	--	1
1,2-Dichlorobenzene	ND		ug/kg	1.5	--	1
1,3-Dichlorobenzene	ND		ug/kg	1.5	--	1
1,4-Dichlorobenzene	ND		ug/kg	1.5	--	1
Methyl tert butyl ether	ND		ug/kg	1.5	--	1
p/m-Xylene	ND		ug/kg	1.5	--	1
o-Xylene	ND		ug/kg	0.77	--	1
Xylenes, Total	ND		ug/kg	0.77	--	1
cis-1,2-Dichloroethene	ND		ug/kg	0.77	--	1
1,2-Dichloroethene, Total	ND		ug/kg	0.77	--	1
Dibromomethane	ND		ug/kg	1.5	--	1
1,2,3-Trichloropropane	ND		ug/kg	1.5	--	1
Styrene	ND		ug/kg	0.77	--	1
Dichlorodifluoromethane	ND		ug/kg	7.7	--	1
Acetone	37		ug/kg	7.7	--	1
Carbon disulfide	ND		ug/kg	7.7	--	1
Methyl ethyl ketone	13		ug/kg	7.7	--	1
Methyl isobutyl ketone	ND		ug/kg	7.7	--	1
2-Hexanone	ND		ug/kg	7.7	--	1
Bromochloromethane	ND		ug/kg	1.5	--	1
Tetrahydrofuran	ND		ug/kg	3.1	--	1
2,2-Dichloropropane	ND		ug/kg	1.5	--	1
1,2-Dibromoethane	ND		ug/kg	0.77	--	1
1,3-Dichloropropane	ND		ug/kg	1.5	--	1
1,1,1,2-Tetrachloroethane	ND		ug/kg	0.38	--	1
Bromobenzene	ND		ug/kg	1.5	--	1
n-Butylbenzene	ND		ug/kg	0.77	--	1
sec-Butylbenzene	ND		ug/kg	0.77	--	1
tert-Butylbenzene	ND		ug/kg	1.5	--	1
o-Chlorotoluene	ND		ug/kg	1.5	--	1
p-Chlorotoluene	ND		ug/kg	1.5	--	1
1,2-Dibromo-3-chloropropane	ND		ug/kg	2.3	--	1
Hexachlorobutadiene	ND		ug/kg	3.1	--	1
Isopropylbenzene	ND		ug/kg	0.77	--	1
p-Isopropyltoluene	ND		ug/kg	0.77	--	1
Naphthalene	ND		ug/kg	3.1	--	1
n-Propylbenzene	ND		ug/kg	0.77	--	1

Project Name: 6473-FULLER MIDDLE **Lab Number:** L1829113

Project Number: 6473 **Report Date:** 08/02/18

SAMPLE RESULTS

Lab ID: L1829113-01 Date Collected: 07/27/18 08:20

Client ID: B-202, S-3 4-5' Date Received: 07/27/18

Sample Location: FRAMINGHAM, MA Field Prep: Not Specified

Sample Depth: 4-5

Parameter	Result	Qualifier	Units	RL	MDL	Dilution Factor
MCP Volatile Organics by 8260/5035 - Westborough Lab						
1,2,3-Trichlorobenzene	ND		ug/kg	1.5	--	1
1,2,4-Trichlorobenzene	ND		ug/kg	1.5	--	1
1,3,5-Trimethylbenzene	ND		ug/kg	1.5	--	1
1,2,4-Trimethylbenzene	ND		ug/kg	1.5	--	1
Diethyl ether	ND		ug/kg	1.5	--	1
Diisopropyl Ether	ND		ug/kg	1.5	--	1
Ethyl-Tert-Butyl-Ether	ND		ug/kg	1.5	--	1
Tertiary-Amyl Methyl Ether	ND		ug/kg	1.5	--	1
1,4-Dioxane	ND		ug/kg	77	--	1

Surrogate	% Recovery	Qualifier	Acceptance Criteria
1,2-Dichloroethane-d4	120		70-130
Toluene-d8	100		70-130
4-Bromofluorobenzene	110		70-130
Dibromofluoromethane	101		70-130

Project Name: 6473-FULLER MIDDLE
Project Number: 6473
Lab Number: L1829113
Report Date: 08/02/18

SAMPLE RESULTS

Lab ID: L1829113-03
Client ID: B-207, S-2 2-4
Sample Location: FRAMINGHAM, MA

Date Collected: 07/27/18 12:00
Date Received: 07/27/18
Field Prep: Not Specified

Sample Depth: 2-4
Matrix: Fill
Analytical Method: 97,8260C
Analytical Date: 08/01/18 03:24
Analyst: MV
Percent Solids: 86%

Parameter	Result	Qualifier	Units	RL	MDL	Dilution Factor
MCP Volatile Organics by 8260/5035 - Westborough Lab						
Methylene chloride	ND		ug/kg	4.0	--	1
1,1-Dichloroethane	ND		ug/kg	0.80	--	1
Chloroform	ND		ug/kg	1.2	--	1
Carbon tetrachloride	ND		ug/kg	0.80	--	1
1,2-Dichloropropane	ND		ug/kg	0.80	--	1
Dibromochloromethane	ND		ug/kg	0.80	--	1
1,1,2-Trichloroethane	ND		ug/kg	0.80	--	1
Tetrachloroethene	ND		ug/kg	0.40	--	1
Chlorobenzene	ND		ug/kg	0.40	--	1
Trichlorofluoromethane	ND		ug/kg	3.2	--	1
1,2-Dichloroethane	ND		ug/kg	0.80	--	1
1,1,1-Trichloroethane	ND		ug/kg	0.40	--	1
Bromodichloromethane	ND		ug/kg	0.40	--	1
trans-1,3-Dichloropropene	ND		ug/kg	0.80	--	1
cis-1,3-Dichloropropene	ND		ug/kg	0.40	--	1
1,3-Dichloropropene, Total	ND		ug/kg	0.40	--	1
1,1-Dichloropropene	ND		ug/kg	0.40	--	1
Bromoform	ND		ug/kg	3.2	--	1
1,1,2,2-Tetrachloroethane	ND		ug/kg	0.40	--	1
Benzene	ND		ug/kg	0.40	--	1
Toluene	ND		ug/kg	0.80	--	1
Ethylbenzene	ND		ug/kg	0.80	--	1
Chloromethane	ND		ug/kg	3.2	--	1
Bromomethane	ND		ug/kg	1.6	--	1
Vinyl chloride	ND		ug/kg	0.80	--	1
Chloroethane	ND		ug/kg	1.6	--	1
1,1-Dichloroethene	ND		ug/kg	0.80	--	1
trans-1,2-Dichloroethene	ND		ug/kg	1.2	--	1

Project Name: 6473-FULLER MIDDLE **Lab Number:** L1829113

Project Number: 6473 **Report Date:** 08/02/18

SAMPLE RESULTS

Lab ID: L1829113-03 Date Collected: 07/27/18 12:00

Client ID: B-207, S-2 2-4 Date Received: 07/27/18

Sample Location: FRAMINGHAM, MA Field Prep: Not Specified

Sample Depth: 2-4

Parameter	Result	Qualifier	Units	RL	MDL	Dilution Factor
MCP Volatile Organics by 8260/5035 - Westborough Lab						
Trichloroethene	ND		ug/kg	0.40	--	1
1,2-Dichlorobenzene	ND		ug/kg	1.6	--	1
1,3-Dichlorobenzene	ND		ug/kg	1.6	--	1
1,4-Dichlorobenzene	ND		ug/kg	1.6	--	1
Methyl tert butyl ether	ND		ug/kg	1.6	--	1
p/m-Xylene	ND		ug/kg	1.6	--	1
o-Xylene	ND		ug/kg	0.80	--	1
Xylenes, Total	ND		ug/kg	0.80	--	1
cis-1,2-Dichloroethene	ND		ug/kg	0.80	--	1
1,2-Dichloroethene, Total	ND		ug/kg	0.80	--	1
Dibromomethane	ND		ug/kg	1.6	--	1
1,2,3-Trichloropropane	ND		ug/kg	1.6	--	1
Styrene	ND		ug/kg	0.80	--	1
Dichlorodifluoromethane	ND		ug/kg	8.0	--	1
Acetone	65		ug/kg	8.0	--	1
Carbon disulfide	ND		ug/kg	8.0	--	1
Methyl ethyl ketone	10		ug/kg	8.0	--	1
Methyl isobutyl ketone	ND		ug/kg	8.0	--	1
2-Hexanone	ND		ug/kg	8.0	--	1
Bromochloromethane	ND		ug/kg	1.6	--	1
Tetrahydrofuran	ND		ug/kg	3.2	--	1
2,2-Dichloropropane	ND		ug/kg	1.6	--	1
1,2-Dibromoethane	ND		ug/kg	0.80	--	1
1,3-Dichloropropane	ND		ug/kg	1.6	--	1
1,1,1,2-Tetrachloroethane	ND		ug/kg	0.40	--	1
Bromobenzene	ND		ug/kg	1.6	--	1
n-Butylbenzene	ND		ug/kg	0.80	--	1
sec-Butylbenzene	ND		ug/kg	0.80	--	1
tert-Butylbenzene	ND		ug/kg	1.6	--	1
o-Chlorotoluene	ND		ug/kg	1.6	--	1
p-Chlorotoluene	ND		ug/kg	1.6	--	1
1,2-Dibromo-3-chloropropane	ND		ug/kg	2.4	--	1
Hexachlorobutadiene	ND		ug/kg	3.2	--	1
Isopropylbenzene	ND		ug/kg	0.80	--	1
p-Isopropyltoluene	ND		ug/kg	0.80	--	1
Naphthalene	ND		ug/kg	3.2	--	1
n-Propylbenzene	ND		ug/kg	0.80	--	1

Project Name: 6473-FULLER MIDDLE **Lab Number:** L1829113

Project Number: 6473 **Report Date:** 08/02/18

SAMPLE RESULTS

Lab ID: L1829113-03 Date Collected: 07/27/18 12:00

Client ID: B-207, S-2 2-4 Date Received: 07/27/18

Sample Location: FRAMINGHAM, MA Field Prep: Not Specified

Sample Depth: 2-4

Parameter	Result	Qualifier	Units	RL	MDL	Dilution Factor
MCP Volatile Organics by 8260/5035 - Westborough Lab						
1,2,3-Trichlorobenzene	ND		ug/kg	1.6	--	1
1,2,4-Trichlorobenzene	ND		ug/kg	1.6	--	1
1,3,5-Trimethylbenzene	ND		ug/kg	1.6	--	1
1,2,4-Trimethylbenzene	ND		ug/kg	1.6	--	1
Diethyl ether	ND		ug/kg	1.6	--	1
Diisopropyl Ether	ND		ug/kg	1.6	--	1
Ethyl-Tert-Butyl-Ether	ND		ug/kg	1.6	--	1
Tertiary-Amyl Methyl Ether	ND		ug/kg	1.6	--	1
1,4-Dioxane	ND		ug/kg	80	--	1

Surrogate	% Recovery	Qualifier	Acceptance Criteria
1,2-Dichloroethane-d4	121		70-130
Toluene-d8	98		70-130
4-Bromofluorobenzene	110		70-130
Dibromofluoromethane	103		70-130

Project Name: 6473-FULLER MIDDLE
Project Number: 6473
Lab Number: L1829113
Report Date: 08/02/18

SAMPLE RESULTS

Lab ID: L1829113-05
Client ID: B-206, S-2 2-4
Sample Location: FRAMINGHAM, MA

Date Collected: 07/27/18 10:15
Date Received: 07/27/18
Field Prep: Not Specified

Sample Depth: 2.-4
Matrix: Fill
Analytical Method: 97,8260C
Analytical Date: 08/01/18 03:50
Analyst: MV
Percent Solids: 88%

Parameter	Result	Qualifier	Units	RL	MDL	Dilution Factor
MCP Volatile Organics by 8260/5035 - Westborough Lab						
Methylene chloride	ND		ug/kg	3.5	--	1
1,1-Dichloroethane	ND		ug/kg	0.71	--	1
Chloroform	ND		ug/kg	1.1	--	1
Carbon tetrachloride	ND		ug/kg	0.71	--	1
1,2-Dichloropropane	ND		ug/kg	0.71	--	1
Dibromochloromethane	ND		ug/kg	0.71	--	1
1,1,2-Trichloroethane	ND		ug/kg	0.71	--	1
Tetrachloroethene	ND		ug/kg	0.35	--	1
Chlorobenzene	ND		ug/kg	0.35	--	1
Trichlorofluoromethane	ND		ug/kg	2.8	--	1
1,2-Dichloroethane	ND		ug/kg	0.71	--	1
1,1,1-Trichloroethane	ND		ug/kg	0.35	--	1
Bromodichloromethane	ND		ug/kg	0.35	--	1
trans-1,3-Dichloropropene	ND		ug/kg	0.71	--	1
cis-1,3-Dichloropropene	ND		ug/kg	0.35	--	1
1,3-Dichloropropene, Total	ND		ug/kg	0.35	--	1
1,1-Dichloropropene	ND		ug/kg	0.35	--	1
Bromoform	ND		ug/kg	2.8	--	1
1,1,2,2-Tetrachloroethane	ND		ug/kg	0.35	--	1
Benzene	ND		ug/kg	0.35	--	1
Toluene	ND		ug/kg	0.71	--	1
Ethylbenzene	ND		ug/kg	0.71	--	1
Chloromethane	ND		ug/kg	2.8	--	1
Bromomethane	ND		ug/kg	1.4	--	1
Vinyl chloride	ND		ug/kg	0.71	--	1
Chloroethane	ND		ug/kg	1.4	--	1
1,1-Dichloroethene	ND		ug/kg	0.71	--	1
trans-1,2-Dichloroethene	ND		ug/kg	1.1	--	1

Project Name: 6473-FULLER MIDDLE **Lab Number:** L1829113

Project Number: 6473 **Report Date:** 08/02/18

SAMPLE RESULTS

Lab ID: L1829113-05 Date Collected: 07/27/18 10:15

Client ID: B-206, S-2 2-4 Date Received: 07/27/18

Sample Location: FRAMINGHAM, MA Field Prep: Not Specified

Sample Depth: 2.-4

Parameter	Result	Qualifier	Units	RL	MDL	Dilution Factor
MCP Volatile Organics by 8260/5035 - Westborough Lab						
Trichloroethene	ND		ug/kg	0.35	--	1
1,2-Dichlorobenzene	ND		ug/kg	1.4	--	1
1,3-Dichlorobenzene	ND		ug/kg	1.4	--	1
1,4-Dichlorobenzene	ND		ug/kg	1.4	--	1
Methyl tert butyl ether	ND		ug/kg	1.4	--	1
p/m-Xylene	ND		ug/kg	1.4	--	1
o-Xylene	ND		ug/kg	0.71	--	1
Xylenes, Total	ND		ug/kg	0.71	--	1
cis-1,2-Dichloroethene	ND		ug/kg	0.71	--	1
1,2-Dichloroethene, Total	ND		ug/kg	0.71	--	1
Dibromomethane	ND		ug/kg	1.4	--	1
1,2,3-Trichloropropane	ND		ug/kg	1.4	--	1
Styrene	ND		ug/kg	0.71	--	1
Dichlorodifluoromethane	ND		ug/kg	7.1	--	1
Acetone	33		ug/kg	7.1	--	1
Carbon disulfide	ND		ug/kg	7.1	--	1
Methyl ethyl ketone	ND		ug/kg	7.1	--	1
Methyl isobutyl ketone	ND		ug/kg	7.1	--	1
2-Hexanone	ND		ug/kg	7.1	--	1
Bromochloromethane	ND		ug/kg	1.4	--	1
Tetrahydrofuran	ND		ug/kg	2.8	--	1
2,2-Dichloropropane	ND		ug/kg	1.4	--	1
1,2-Dibromoethane	ND		ug/kg	0.71	--	1
1,3-Dichloropropane	ND		ug/kg	1.4	--	1
1,1,1,2-Tetrachloroethane	ND		ug/kg	0.35	--	1
Bromobenzene	ND		ug/kg	1.4	--	1
n-Butylbenzene	ND		ug/kg	0.71	--	1
sec-Butylbenzene	ND		ug/kg	0.71	--	1
tert-Butylbenzene	ND		ug/kg	1.4	--	1
o-Chlorotoluene	ND		ug/kg	1.4	--	1
p-Chlorotoluene	ND		ug/kg	1.4	--	1
1,2-Dibromo-3-chloropropane	ND		ug/kg	2.1	--	1
Hexachlorobutadiene	ND		ug/kg	2.8	--	1
Isopropylbenzene	ND		ug/kg	0.71	--	1
p-Isopropyltoluene	ND		ug/kg	0.71	--	1
Naphthalene	ND		ug/kg	2.8	--	1
n-Propylbenzene	ND		ug/kg	0.71	--	1

Project Name: 6473-FULLER MIDDLE **Lab Number:** L1829113

Project Number: 6473 **Report Date:** 08/02/18

SAMPLE RESULTS

Lab ID: L1829113-05 Date Collected: 07/27/18 10:15

Client ID: B-206, S-2 2-4 Date Received: 07/27/18

Sample Location: FRAMINGHAM, MA Field Prep: Not Specified

Sample Depth: 2.-4

Parameter	Result	Qualifier	Units	RL	MDL	Dilution Factor
MCP Volatile Organics by 8260/5035 - Westborough Lab						
1,2,3-Trichlorobenzene	ND		ug/kg	1.4	--	1
1,2,4-Trichlorobenzene	ND		ug/kg	1.4	--	1
1,3,5-Trimethylbenzene	ND		ug/kg	1.4	--	1
1,2,4-Trimethylbenzene	ND		ug/kg	1.4	--	1
Diethyl ether	ND		ug/kg	1.4	--	1
Diisopropyl Ether	ND		ug/kg	1.4	--	1
Ethyl-Tert-Butyl-Ether	ND		ug/kg	1.4	--	1
Tertiary-Amyl Methyl Ether	ND		ug/kg	1.4	--	1
1,4-Dioxane	ND		ug/kg	71	--	1

Surrogate	% Recovery	Qualifier	Acceptance Criteria
1,2-Dichloroethane-d4	119		70-130
Toluene-d8	100		70-130
4-Bromofluorobenzene	111		70-130
Dibromofluoromethane	101		70-130

Project Name: 6473-FULLER MIDDLE
Project Number: 6473
Lab Number: L1829113
Report Date: 08/02/18

SAMPLE RESULTS

Lab ID: L1829113-07
Client ID: B-208, S-2 2-4
Sample Location: FRAMINGHAM, MA

Date Collected: 07/27/18 14:10
Date Received: 07/27/18
Field Prep: Not Specified

Sample Depth: 2-4
Matrix: Fill
Analytical Method: 97,8260C
Analytical Date: 08/01/18 04:16
Analyst: MV
Percent Solids: 90%

Parameter	Result	Qualifier	Units	RL	MDL	Dilution Factor
MCP Volatile Organics by 8260/5035 - Westborough Lab						
Methylene chloride	ND		ug/kg	3.6	--	1
1,1-Dichloroethane	ND		ug/kg	0.72	--	1
Chloroform	ND		ug/kg	1.1	--	1
Carbon tetrachloride	ND		ug/kg	0.72	--	1
1,2-Dichloropropane	ND		ug/kg	0.72	--	1
Dibromochloromethane	ND		ug/kg	0.72	--	1
1,1,2-Trichloroethane	ND		ug/kg	0.72	--	1
Tetrachloroethene	ND		ug/kg	0.36	--	1
Chlorobenzene	ND		ug/kg	0.36	--	1
Trichlorofluoromethane	ND		ug/kg	2.9	--	1
1,2-Dichloroethane	ND		ug/kg	0.72	--	1
1,1,1-Trichloroethane	ND		ug/kg	0.36	--	1
Bromodichloromethane	ND		ug/kg	0.36	--	1
trans-1,3-Dichloropropene	ND		ug/kg	0.72	--	1
cis-1,3-Dichloropropene	ND		ug/kg	0.36	--	1
1,3-Dichloropropene, Total	ND		ug/kg	0.36	--	1
1,1-Dichloropropene	ND		ug/kg	0.36	--	1
Bromoform	ND		ug/kg	2.9	--	1
1,1,2,2-Tetrachloroethane	ND		ug/kg	0.36	--	1
Benzene	ND		ug/kg	0.36	--	1
Toluene	ND		ug/kg	0.72	--	1
Ethylbenzene	ND		ug/kg	0.72	--	1
Chloromethane	ND		ug/kg	2.9	--	1
Bromomethane	ND		ug/kg	1.4	--	1
Vinyl chloride	ND		ug/kg	0.72	--	1
Chloroethane	ND		ug/kg	1.4	--	1
1,1-Dichloroethene	ND		ug/kg	0.72	--	1
trans-1,2-Dichloroethene	ND		ug/kg	1.1	--	1

Project Name: 6473-FULLER MIDDLE **Lab Number:** L1829113

Project Number: 6473 **Report Date:** 08/02/18

SAMPLE RESULTS

Lab ID: L1829113-07 Date Collected: 07/27/18 14:10

Client ID: B-208, S-2 2-4 Date Received: 07/27/18

Sample Location: FRAMINGHAM, MA Field Prep: Not Specified

Sample Depth: 2-4

Parameter	Result	Qualifier	Units	RL	MDL	Dilution Factor
MCP Volatile Organics by 8260/5035 - Westborough Lab						
Trichloroethene	ND		ug/kg	0.36	--	1
1,2-Dichlorobenzene	ND		ug/kg	1.4	--	1
1,3-Dichlorobenzene	ND		ug/kg	1.4	--	1
1,4-Dichlorobenzene	ND		ug/kg	1.4	--	1
Methyl tert butyl ether	ND		ug/kg	1.4	--	1
p/m-Xylene	ND		ug/kg	1.4	--	1
o-Xylene	ND		ug/kg	0.72	--	1
Xylenes, Total	ND		ug/kg	0.72	--	1
cis-1,2-Dichloroethene	ND		ug/kg	0.72	--	1
1,2-Dichloroethene, Total	ND		ug/kg	0.72	--	1
Dibromomethane	ND		ug/kg	1.4	--	1
1,2,3-Trichloropropane	ND		ug/kg	1.4	--	1
Styrene	ND		ug/kg	0.72	--	1
Dichlorodifluoromethane	ND		ug/kg	7.2	--	1
Acetone	22		ug/kg	7.2	--	1
Carbon disulfide	ND		ug/kg	7.2	--	1
Methyl ethyl ketone	ND		ug/kg	7.2	--	1
Methyl isobutyl ketone	ND		ug/kg	7.2	--	1
2-Hexanone	ND		ug/kg	7.2	--	1
Bromochloromethane	ND		ug/kg	1.4	--	1
Tetrahydrofuran	ND		ug/kg	2.9	--	1
2,2-Dichloropropane	ND		ug/kg	1.4	--	1
1,2-Dibromoethane	ND		ug/kg	0.72	--	1
1,3-Dichloropropane	ND		ug/kg	1.4	--	1
1,1,1,2-Tetrachloroethane	ND		ug/kg	0.36	--	1
Bromobenzene	ND		ug/kg	1.4	--	1
n-Butylbenzene	ND		ug/kg	0.72	--	1
sec-Butylbenzene	ND		ug/kg	0.72	--	1
tert-Butylbenzene	ND		ug/kg	1.4	--	1
o-Chlorotoluene	ND		ug/kg	1.4	--	1
p-Chlorotoluene	ND		ug/kg	1.4	--	1
1,2-Dibromo-3-chloropropane	ND		ug/kg	2.2	--	1
Hexachlorobutadiene	ND		ug/kg	2.9	--	1
Isopropylbenzene	ND		ug/kg	0.72	--	1
p-Isopropyltoluene	ND		ug/kg	0.72	--	1
Naphthalene	ND		ug/kg	2.9	--	1
n-Propylbenzene	ND		ug/kg	0.72	--	1

Project Name: 6473-FULLER MIDDLE **Lab Number:** L1829113

Project Number: 6473 **Report Date:** 08/02/18

SAMPLE RESULTS

Lab ID: L1829113-07 Date Collected: 07/27/18 14:10

Client ID: B-208, S-2 2-4 Date Received: 07/27/18

Sample Location: FRAMINGHAM, MA Field Prep: Not Specified

Sample Depth: 2-4

Parameter	Result	Qualifier	Units	RL	MDL	Dilution Factor
MCP Volatile Organics by 8260/5035 - Westborough Lab						
1,2,3-Trichlorobenzene	ND		ug/kg	1.4	--	1
1,2,4-Trichlorobenzene	ND		ug/kg	1.4	--	1
1,3,5-Trimethylbenzene	ND		ug/kg	1.4	--	1
1,2,4-Trimethylbenzene	ND		ug/kg	1.4	--	1
Diethyl ether	ND		ug/kg	1.4	--	1
Diisopropyl Ether	ND		ug/kg	1.4	--	1
Ethyl-Tert-Butyl-Ether	ND		ug/kg	1.4	--	1
Tertiary-Amyl Methyl Ether	ND		ug/kg	1.4	--	1
1,4-Dioxane	ND		ug/kg	72	--	1

Surrogate	% Recovery	Qualifier	Acceptance Criteria
1,2-Dichloroethane-d4	119		70-130
Toluene-d8	99		70-130
4-Bromofluorobenzene	106		70-130
Dibromofluoromethane	101		70-130

Project Name: 6473-FULLER MIDDLE **Lab Number:** L1829113

Project Number: 6473 **Report Date:** 08/02/18

Method Blank Analysis
Batch Quality Control

Analytical Method: 97,8260C
Analytical Date: 07/31/18 22:11
Analyst: PK

Parameter	Result	Qualifier	Units	RL	MDL
MCP Volatile Organics by 8260/5035 - Westborough Lab for sample(s): 01,03,05,07 Batch: WG1141608-5					
Methylene chloride	ND		ug/kg	5.0	--
1,1-Dichloroethane	ND		ug/kg	1.0	--
Chloroform	ND		ug/kg	1.5	--
Carbon tetrachloride	ND		ug/kg	1.0	--
1,2-Dichloropropane	ND		ug/kg	1.0	--
Dibromochloromethane	ND		ug/kg	1.0	--
1,1,2-Trichloroethane	ND		ug/kg	1.0	--
Tetrachloroethene	ND		ug/kg	0.50	--
Chlorobenzene	ND		ug/kg	0.50	--
Trichlorofluoromethane	ND		ug/kg	4.0	--
1,2-Dichloroethane	ND		ug/kg	1.0	--
1,1,1-Trichloroethane	ND		ug/kg	0.50	--
Bromodichloromethane	ND		ug/kg	0.50	--
trans-1,3-Dichloropropene	ND		ug/kg	1.0	--
cis-1,3-Dichloropropene	ND		ug/kg	0.50	--
1,3-Dichloropropene, Total	ND		ug/kg	0.50	--
1,1-Dichloropropene	ND		ug/kg	0.50	--
Bromoform	ND		ug/kg	4.0	--
1,1,2,2-Tetrachloroethane	ND		ug/kg	0.50	--
Benzene	ND		ug/kg	0.50	--
Toluene	ND		ug/kg	1.0	--
Ethylbenzene	ND		ug/kg	1.0	--
Chloromethane	ND		ug/kg	4.0	--
Bromomethane	ND		ug/kg	2.0	--
Vinyl chloride	ND		ug/kg	1.0	--
Chloroethane	ND		ug/kg	2.0	--
1,1-Dichloroethene	ND		ug/kg	1.0	--
trans-1,2-Dichloroethene	ND		ug/kg	1.5	--
Trichloroethene	ND		ug/kg	0.50	--

Project Name: 6473-FULLER MIDDLE **Lab Number:** L1829113

Project Number: 6473 **Report Date:** 08/02/18

Method Blank Analysis
Batch Quality Control

Analytical Method: 97,8260C
Analytical Date: 07/31/18 22:11
Analyst: PK

Parameter	Result	Qualifier	Units	RL	MDL
MCP Volatile Organics by 8260/5035 - Westborough Lab for sample(s): 01,03,05,07 Batch: WG1141608-5					
1,2-Dichlorobenzene	ND		ug/kg	2.0	--
1,3-Dichlorobenzene	ND		ug/kg	2.0	--
1,4-Dichlorobenzene	ND		ug/kg	2.0	--
Methyl tert butyl ether	ND		ug/kg	2.0	--
p/m-Xylene	ND		ug/kg	2.0	--
o-Xylene	ND		ug/kg	1.0	--
Xylenes, Total	ND		ug/kg	1.0	--
cis-1,2-Dichloroethene	ND		ug/kg	1.0	--
1,2-Dichloroethene, Total	ND		ug/kg	1.0	--
Dibromomethane	ND		ug/kg	2.0	--
1,4-Dichlorobutane	ND		ug/kg	10	--
1,2,3-Trichloropropane	ND		ug/kg	2.0	--
Styrene	ND		ug/kg	1.0	--
Dichlorodifluoromethane	ND		ug/kg	10	--
Acetone	ND		ug/kg	10	--
Carbon disulfide	ND		ug/kg	10	--
Methyl ethyl ketone	ND		ug/kg	10	--
Methyl isobutyl ketone	ND		ug/kg	10	--
2-Hexanone	ND		ug/kg	10	--
Ethyl methacrylate	ND		ug/kg	10	--
Acrylonitrile	ND		ug/kg	4.0	--
Bromochloromethane	ND		ug/kg	2.0	--
Tetrahydrofuran	ND		ug/kg	4.0	--
2,2-Dichloropropane	ND		ug/kg	2.0	--
1,2-Dibromoethane	ND		ug/kg	1.0	--
1,3-Dichloropropane	ND		ug/kg	2.0	--
1,1,1,2-Tetrachloroethane	ND		ug/kg	0.50	--
Bromobenzene	ND		ug/kg	2.0	--
n-Butylbenzene	ND		ug/kg	1.0	--

Project Name: 6473-FULLER MIDDLE **Lab Number:** L1829113

Project Number: 6473 **Report Date:** 08/02/18

Method Blank Analysis
Batch Quality Control

Analytical Method: 97,8260C
Analytical Date: 07/31/18 22:11
Analyst: PK

Parameter	Result	Qualifier	Units	RL	MDL
MCP Volatile Organics by 8260/5035 - Westborough Lab for sample(s): 01,03,05,07 Batch: WG1141608-5					
sec-Butylbenzene	ND		ug/kg	1.0	--
tert-Butylbenzene	ND		ug/kg	2.0	--
o-Chlorotoluene	ND		ug/kg	2.0	--
p-Chlorotoluene	ND		ug/kg	2.0	--
1,2-Dibromo-3-chloropropane	ND		ug/kg	3.0	--
Hexachlorobutadiene	ND		ug/kg	4.0	--
Isopropylbenzene	ND		ug/kg	1.0	--
p-Isopropyltoluene	ND		ug/kg	1.0	--
Naphthalene	ND		ug/kg	4.0	--
n-Propylbenzene	ND		ug/kg	1.0	--
1,2,3-Trichlorobenzene	ND		ug/kg	2.0	--
1,2,4-Trichlorobenzene	ND		ug/kg	2.0	--
1,3,5-Trimethylbenzene	ND		ug/kg	2.0	--
1,2,4-Trimethylbenzene	ND		ug/kg	2.0	--
trans-1,4-Dichloro-2-butene	ND		ug/kg	5.0	--
Diethyl ether	ND		ug/kg	2.0	--
Diisopropyl Ether	ND		ug/kg	2.0	--
Ethyl-Tert-Butyl-Ether	ND		ug/kg	2.0	--
Tertiary-Amyl Methyl Ether	ND		ug/kg	2.0	--
1,4-Dioxane	ND		ug/kg	100	--
2-Chloroethylvinyl ether	ND		ug/kg	20	--
Halothane	ND		ug/kg	10	--
Ethyl Acetate	ND		ug/kg	10	--
Freon-113	ND		ug/kg	4.0	--
Vinyl acetate	ND		ug/kg	10	--

Project Name: 6473-FULLER MIDDLE **Lab Number:** L1829113

Project Number: 6473 **Report Date:** 08/02/18

Method Blank Analysis
Batch Quality Control

Analytical Method: 97,8260C
Analytical Date: 07/31/18 22:11
Analyst: PK

Parameter	Result	Qualifier	Units	RL	MDL
MCP Volatile Organics by 8260/5035 - Westborough Lab for sample(s): 01,03,05,07 Batch: WG1141608-5					

Surrogate	%Recovery	Qualifier	Acceptance Criteria
1,2-Dichloroethane-d4	113		70-130
Toluene-d8	99		70-130
4-Bromofluorobenzene	110		70-130
Dibromofluoromethane	93		70-130

Lab Control Sample Analysis
Batch Quality Control

Project Name: 6473-FULLER MIDDLE
Project Number: 6473

Lab Number: L1829113
Report Date: 08/02/18

Parameter	LCS %Recovery	Qual	LCSD %Recovery	Qual	%Recovery Limits	RPD	Qual	RPD Limits
MCP Volatile Organics by 8260/5035 - Westborough Lab Associated sample(s): 01,03,05,07 Batch: WG1141608-3 WG1141608-4								
Methylene chloride	101		102		70-130	1		20
1,1-Dichloroethane	107		108		70-130	1		20
Chloroform	97		99		70-130	2		20
Carbon tetrachloride	93		92		70-130	1		20
1,2-Dichloropropane	105		106		70-130	1		20
Dibromochloromethane	91		89		70-130	2		20
1,1,2-Trichloroethane	101		105		70-130	4		20
Tetrachloroethene	88		88		70-130	0		20
Chlorobenzene	89		90		70-130	1		20
Trichlorofluoromethane	85		89		70-130	5		20
1,2-Dichloroethane	110		111		70-130	1		20
1,1,1-Trichloroethane	97		99		70-130	2		20
Bromodichloromethane	99		102		70-130	3		20
trans-1,3-Dichloropropene	108		107		70-130	1		20
cis-1,3-Dichloropropene	102		104		70-130	2		20
1,1-Dichloropropene	98		102		70-130	4		20
Bromoform	94		96		70-130	2		20
1,1,2,2-Tetrachloroethane	101		103		70-130	2		20
Benzene	98		100		70-130	2		20
Toluene	97		100		70-130	3		20
Ethylbenzene	98		100		70-130	2		20
Chloromethane	121		114		70-130	6		20
Bromomethane	81		86		70-130	6		20

Lab Control Sample Analysis
Batch Quality Control

Project Name: 6473-FULLER MIDDLE
Project Number: 6473

Lab Number: L1829113
Report Date: 08/02/18

Parameter	LCS %Recovery	Qual	LCSD %Recovery	Qual	%Recovery Limits	RPD	Qual	RPD Limits
MCP Volatile Organics by 8260/5035 - Westborough Lab Associated sample(s): 01,03,05,07 Batch: WG1141608-3 WG1141608-4								
Vinyl chloride	116		120		70-130	3		20
Chloroethane	109		116		70-130	6		20
1,1-Dichloroethene	93		96		70-130	3		20
trans-1,2-Dichloroethene	96		96		70-130	0		20
Trichloroethene	91		91		70-130	0		20
1,2-Dichlorobenzene	85		90		70-130	6		20
1,3-Dichlorobenzene	86		90		70-130	5		20
1,4-Dichlorobenzene	84		87		70-130	4		20
Methyl tert butyl ether	93		94		70-130	1		20
p/m-Xylene	96		99		70-130	3		20
o-Xylene	94		95		70-130	1		20
cis-1,2-Dichloroethene	94		95		70-130	1		20
Dibromomethane	93		95		70-130	2		20
1,4-Dichlorobutane	120		126		70-130	5		20
1,2,3-Trichloropropane	105		107		70-130	2		20
Styrene	93		97		70-130	4		20
Dichlorodifluoromethane	100		100		70-130	0		20
Acetone	**147**	Q	114		70-130	**25**	Q	20
Carbon disulfide	101		101		70-130	0		20
Methyl ethyl ketone	112		111		70-130	1		20
Methyl isobutyl ketone	115		108		70-130	6		20
2-Hexanone	98		92		70-130	6		20
Ethyl methacrylate	86		84		70-130	2		20

Lab Control Sample Analysis
Batch Quality Control

Project Name: 6473-FULLER MIDDLE
Project Number: 6473

Lab Number: L1829113
Report Date: 08/02/18

Parameter	LCS %Recovery	Qual	LCSD %Recovery	Qual	%Recovery Limits	RPD	Qual	RPD Limits
MCP Volatile Organics by 8260/5035 - Westborough Lab Associated sample(s): 01,03,05,07 Batch: WG1141608-3 WG1141608-4								
Acrylonitrile	114		109		70-130	4		20
Bromochloromethane	88		89		70-130	1		20
Tetrahydrofuran	**138**	Q	**134**	Q	70-130	3		20
2,2-Dichloropropane	97		101		70-130	4		20
1,2-Dibromoethane	94		93		70-130	1		20
1,3-Dichloropropane	104		107		70-130	3		20
1,1,1,2-Tetrachloroethane	88		90		70-130	2		20
Bromobenzene	85		90		70-130	6		20
n-Butylbenzene	101		106		70-130	5		20
sec-Butylbenzene	98		101		70-130	3		20
tert-Butylbenzene	89		93		70-130	4		20
o-Chlorotoluene	98		101		70-130	3		20
p-Chlorotoluene	99		103		70-130	4		20
1,2-Dibromo-3-chloropropane	82		90		70-130	9		20
Hexachlorobutadiene	98		103		70-130	5		20
Isopropylbenzene	93		99		70-130	6		20
p-Isopropyltoluene	89		93		70-130	4		20
Naphthalene	83		84		70-130	1		20
n-Propylbenzene	98		102		70-130	4		20
1,2,3-Trichlorobenzene	89		92		70-130	3		20
1,2,4-Trichlorobenzene	86		89		70-130	3		20
1,3,5-Trimethylbenzene	97		100		70-130	3		20
1,2,4-Trimethylbenzene	98		102		70-130	4		20

Lab Control Sample Analysis
Batch Quality Control

Project Name: 6473-FULLER MIDDLE
Project Number: 6473

Lab Number: L1829113
Report Date: 08/02/18

Parameter	LCS %Recovery	Qual	LCSD %Recovery	Qual	%Recovery Limits	RPD	Qual	RPD Limits
MCP Volatile Organics by 8260/5035 - Westborough Lab Associated sample(s): 01,03,05,07 Batch: WG1141608-3 WG1141608-4								
trans-1,4-Dichloro-2-butene	119		128		70-130	7		20
Diethyl ether	100		97		70-130	3		20
Diisopropyl Ether	115		116		70-130	1		20
Ethyl-Tert-Butyl-Ether	105		108		70-130	3		20
Tertiary-Amyl Methyl Ether	91		92		70-130	1		20
1,4-Dioxane	86		87		70-130	1		20
2-Chloroethylvinyl ether	82		86		70-130	5		20
Halothane	90		89		70-130	1		20
Ethyl Acetate	112		107		70-130	5		20
Freon-113	98		97		70-130	1		20
Vinyl acetate	109		110		70-130	1		20

Surrogate	LCS %Recovery	Qual	LCSD %Recovery	Qual	Acceptance Criteria
1,2-Dichloroethane-d4	111		108		70-130
Toluene-d8	101		102		70-130
4-Bromofluorobenzene	110		110		70-130
Dibromofluoromethane	94		95		70-130

SEMIVOLATILES

Project Name: 6473-FULLER MIDDLE
Project Number: 6473

Lab Number: L1829113
Report Date: 08/02/18

SAMPLE RESULTS

Lab ID: L1829113-02
Client ID: B-202 0.5-5 FILL
Sample Location: FRAMINGHAM, MA

Date Collected: 07/27/18 08:20
Date Received: 07/27/18
Field Prep: Not Specified

Sample Depth: 0.5-5
Matrix: Fill
Analytical Method: 97,8270D
Analytical Date: 07/31/18 22:18
Analyst: JG
Percent Solids: 83%

Extraction Method: EPA 3546
Extraction Date: 07/30/18 15:35

Parameter	Result	Qualifier	Units	RL	MDL	Dilution Factor
MCP Semivolatile Organics - Westborough Lab						
Acenaphthene	ND		ug/kg	160	--	1
1,2,4-Trichlorobenzene	ND		ug/kg	200	--	1
Hexachlorobenzene	ND		ug/kg	120	--	1
Bis(2-chloroethyl)ether	ND		ug/kg	180	--	1
2-Chloronaphthalene	ND		ug/kg	200	--	1
1,2-Dichlorobenzene	ND		ug/kg	200	--	1
1,3-Dichlorobenzene	ND		ug/kg	200	--	1
1,4-Dichlorobenzene	ND		ug/kg	200	--	1
3,3'-Dichlorobenzidine	ND		ug/kg	200	--	1
2,4-Dinitrotoluene	ND		ug/kg	200	--	1
2,6-Dinitrotoluene	ND		ug/kg	200	--	1
Azobenzene	ND		ug/kg	200	--	1
Fluoranthene	1200		ug/kg	120	--	1
4-Bromophenyl phenyl ether	ND		ug/kg	200	--	1
Bis(2-chloroisopropyl)ether	ND		ug/kg	240	--	1
Bis(2-chloroethoxy)methane	ND		ug/kg	210	--	1
Hexachlorobutadiene	ND		ug/kg	200	--	1
Hexachloroethane	ND		ug/kg	160	--	1
Isophorone	ND		ug/kg	180	--	1
Naphthalene	ND		ug/kg	200	--	1
Nitrobenzene	ND		ug/kg	180	--	1
Bis(2-ethylhexyl)phthalate	ND		ug/kg	200	--	1
Butyl benzyl phthalate	ND		ug/kg	200	--	1
Di-n-butylphthalate	ND		ug/kg	200	--	1
Di-n-octylphthalate	ND		ug/kg	200	--	1
Diethyl phthalate	ND		ug/kg	200	--	1
Dimethyl phthalate	ND		ug/kg	200	--	1
Benzo(a)anthracene	500		ug/kg	120	--	1

Project Name: 6473-FULLER MIDDLE **Lab Number:** L1829113

Project Number: 6473 **Report Date:** 08/02/18

SAMPLE RESULTS

Lab ID: L1829113-02 Date Collected: 07/27/18 08:20

Client ID: B-202 0.5-5 FILL Date Received: 07/27/18

Sample Location: FRAMINGHAM, MA Field Prep: Not Specified

Sample Depth: 0.5-5

Parameter	Result	Qualifier	Units	RL	MDL	Dilution Factor
MCP Semivolatile Organics - Westborough Lab						
Benzo(a)pyrene	530		ug/kg	160	--	1
Benzo(b)fluoranthene	920		ug/kg	120	--	1
Benzo(k)fluoranthene	230		ug/kg	120	--	1
Chrysene	660		ug/kg	120	--	1
Acenaphthylene	ND		ug/kg	160	--	1
Anthracene	ND		ug/kg	120	--	1
Benzo(ghi)perylene	410		ug/kg	160	--	1
Fluorene	ND		ug/kg	200	--	1
Phenanthrene	330		ug/kg	120	--	1
Dibenzo(a,h)anthracene	ND		ug/kg	120	--	1
Indeno(1,2,3-cd)pyrene	450		ug/kg	160	--	1
Pyrene	950		ug/kg	120	--	1
Aniline	ND		ug/kg	240	--	1
4-Chloroaniline	ND		ug/kg	200	--	1
Dibenzofuran	ND		ug/kg	200	--	1
2-Methylnaphthalene	ND		ug/kg	240	--	1
Acetophenone	ND		ug/kg	200	--	1
2,4,6-Trichlorophenol	ND		ug/kg	120	--	1
2-Chlorophenol	ND		ug/kg	200	--	1
2,4-Dichlorophenol	ND		ug/kg	180	--	1
2,4-Dimethylphenol	ND		ug/kg	200	--	1
2-Nitrophenol	ND		ug/kg	430	--	1
4-Nitrophenol	ND		ug/kg	280	--	1
2,4-Dinitrophenol	ND		ug/kg	950	--	1
Pentachlorophenol	ND		ug/kg	400	--	1
Phenol	ND		ug/kg	200	--	1
2-Methylphenol	ND		ug/kg	200	--	1
3-Methylphenol/4-Methylphenol	ND		ug/kg	290	--	1
2,4,5-Trichlorophenol	ND		ug/kg	200	--	1
Pyridine	ND		ug/kg	210	--	1

Project Name: 6473-FULLER MIDDLE **Lab Number:** L1829113

Project Number: 6473 **Report Date:** 08/02/18

SAMPLE RESULTS

Lab ID: L1829113-02 Date Collected: 07/27/18 08:20

Client ID: B-202 0.5-5 FILL Date Received: 07/27/18

Sample Location: FRAMINGHAM, MA Field Prep: Not Specified

Sample Depth: 0.5-5

Parameter	Result	Qualifier	Units	RL	MDL	Dilution Factor
MCP Semivolatile Organics - Westborough Lab						

Surrogate	% Recovery	Qualifier	Acceptance Criteria
2-Fluorophenol	66		30-130
Phenol-d6	68		30-130
Nitrobenzene-d5	72		30-130
2-Fluorobiphenyl	64		30-130
2,4,6-Tribromophenol	67		30-130
4-Terphenyl-d14	60		30-130

Project Name: 6473-FULLER MIDDLE
Project Number: 6473

Lab Number: L1829113
Report Date: 08/02/18

SAMPLE RESULTS

Lab ID: L1829113-04
Client ID: B-207 .4-7.5 FILL
Sample Location: FRAMINGHAM, MA

Date Collected: 07/27/18 12:00
Date Received: 07/27/18
Field Prep: Not Specified

Sample Depth: 0.4-7.5
Matrix: Fill
Analytical Method: 97,8270D
Analytical Date: 07/31/18 23:34
Analyst: JG
Percent Solids: 86%

Extraction Method: EPA 3546
Extraction Date: 07/30/18 15:35

Parameter	Result	Qualifier	Units	RL	MDL	Dilution Factor
MCP Semivolatile Organics - Westborough Lab						
Acenaphthene	ND		ug/kg	150	--	1
1,2,4-Trichlorobenzene	ND		ug/kg	190	--	1
Hexachlorobenzene	ND		ug/kg	110	--	1
Bis(2-chloroethyl)ether	ND		ug/kg	170	--	1
2-Chloronaphthalene	ND		ug/kg	190	--	1
1,2-Dichlorobenzene	ND		ug/kg	190	--	1
1,3-Dichlorobenzene	ND		ug/kg	190	--	1
1,4-Dichlorobenzene	ND		ug/kg	190	--	1
3,3'-Dichlorobenzidine	ND		ug/kg	190	--	1
2,4-Dinitrotoluene	ND		ug/kg	190	--	1
2,6-Dinitrotoluene	ND		ug/kg	190	--	1
Azobenzene	ND		ug/kg	190	--	1
Fluoranthene	3200		ug/kg	110	--	1
4-Bromophenyl phenyl ether	ND		ug/kg	190	--	1
Bis(2-chloroisopropyl)ether	ND		ug/kg	230	--	1
Bis(2-chloroethoxy)methane	ND		ug/kg	200	--	1
Hexachlorobutadiene	ND		ug/kg	190	--	1
Hexachloroethane	ND		ug/kg	150	--	1
Isophorone	ND		ug/kg	170	--	1
Naphthalene	230		ug/kg	190	--	1
Nitrobenzene	ND		ug/kg	170	--	1
Bis(2-ethylhexyl)phthalate	ND		ug/kg	190	--	1
Butyl benzyl phthalate	ND		ug/kg	190	--	1
Di-n-butylphthalate	ND		ug/kg	190	--	1
Di-n-octylphthalate	ND		ug/kg	190	--	1
Diethyl phthalate	ND		ug/kg	190	--	1
Dimethyl phthalate	ND		ug/kg	190	--	1
Benzo(a)anthracene	2000		ug/kg	110	--	1

Project Name: 6473-FULLER MIDDLE **Lab Number:** L1829113

Project Number: 6473 **Report Date:** 08/02/18

SAMPLE RESULTS

Lab ID: L1829113-04 Date Collected: 07/27/18 12:00

Client ID: B-207 .4-7.5 FILL Date Received: 07/27/18

Sample Location: FRAMINGHAM, MA Field Prep: Not Specified

Sample Depth: 0.4-7.5

Parameter	Result	Qualifier	Units	RL	MDL	Dilution Factor
MCP Semivolatile Organics - Westborough Lab						
Benzo(a)pyrene	1800		ug/kg	150	--	1
Benzo(b)fluoranthene	2100		ug/kg	110	--	1
Benzo(k)fluoranthene	590		ug/kg	110	--	1
Chrysene	2000		ug/kg	110	--	1
Acenaphthylene	1400		ug/kg	150	--	1
Anthracene	1100		ug/kg	110	--	1
Benzo(ghi)perylene	1100		ug/kg	150	--	1
Fluorene	380		ug/kg	190	--	1
Phenanthrene	2000		ug/kg	110	--	1
Dibenzo(a,h)anthracene	320		ug/kg	110	--	1
Indeno(1,2,3-cd)pyrene	1100		ug/kg	150	--	1
Pyrene	3900		ug/kg	110	--	1
Aniline	ND		ug/kg	230	--	1
4-Chloroaniline	ND		ug/kg	190	--	1
Dibenzofuran	ND		ug/kg	190	--	1
2-Methylnaphthalene	ND		ug/kg	230	--	1
Acetophenone	ND		ug/kg	190	--	1
2,4,6-Trichlorophenol	ND		ug/kg	110	--	1
2-Chlorophenol	ND		ug/kg	190	--	1
2,4-Dichlorophenol	ND		ug/kg	170	--	1
2,4-Dimethylphenol	ND		ug/kg	190	--	1
2-Nitrophenol	ND		ug/kg	410	--	1
4-Nitrophenol	ND		ug/kg	260	--	1
2,4-Dinitrophenol	ND		ug/kg	900	--	1
Pentachlorophenol	ND		ug/kg	380	--	1
Phenol	ND		ug/kg	190	--	1
2-Methylphenol	ND		ug/kg	190	--	1
3-Methylphenol/4-Methylphenol	ND		ug/kg	270	--	1
2,4,5-Trichlorophenol	ND		ug/kg	190	--	1
Pyridine	ND		ug/kg	200	--	1

Project Name: 6473-FULLER MIDDLE **Lab Number:** L1829113

Project Number: 6473 **Report Date:** 08/02/18

SAMPLE RESULTS

Lab ID: L1829113-04 Date Collected: 07/27/18 12:00

Client ID: B-207 .4-7.5 FILL Date Received: 07/27/18

Sample Location: FRAMINGHAM, MA Field Prep: Not Specified

Sample Depth: 0.4-7.5

Parameter	Result	Qualifier	Units	RL	MDL	Dilution Factor
MCP Semivolatile Organics - Westborough Lab						

Surrogate	% Recovery	Qualifier	Acceptance Criteria
2-Fluorophenol	65		30-130
Phenol-d6	68		30-130
Nitrobenzene-d5	75		30-130
2-Fluorobiphenyl	62		30-130
2,4,6-Tribromophenol	60		30-130
4-Terphenyl-d14	53		30-130

Project Name: 6473-FULLER MIDDLE
Project Number: 6473

Lab Number: L1829113
Report Date: 08/02/18

SAMPLE RESULTS

Lab ID: L1829113-06
Client ID: B-206 0.5-4 FILL
Sample Location: FRAMINGHAM, MA

Date Collected: 07/27/18 10:15
Date Received: 07/27/18
Field Prep: Not Specified

Sample Depth: 0.5-4
Matrix: Fill
Analytical Method: 97,8270D
Analytical Date: 08/01/18 00:00
Analyst: JG
Percent Solids: 87%

Extraction Method: EPA 3546
Extraction Date: 07/30/18 15:35

Parameter	Result	Qualifier	Units	RL	MDL	Dilution Factor
MCP Semivolatile Organics - Westborough Lab						
Acenaphthene	ND		ug/kg	150	--	1
1,2,4-Trichlorobenzene	ND		ug/kg	190	--	1
Hexachlorobenzene	ND		ug/kg	110	--	1
Bis(2-chloroethyl)ether	ND		ug/kg	170	--	1
2-Chloronaphthalene	ND		ug/kg	190	--	1
1,2-Dichlorobenzene	ND		ug/kg	190	--	1
1,3-Dichlorobenzene	ND		ug/kg	190	--	1
1,4-Dichlorobenzene	ND		ug/kg	190	--	1
3,3'-Dichlorobenzidine	ND		ug/kg	190	--	1
2,4-Dinitrotoluene	ND		ug/kg	190	--	1
2,6-Dinitrotoluene	ND		ug/kg	190	--	1
Azobenzene	ND		ug/kg	190	--	1
Fluoranthene	470		ug/kg	110	--	1
4-Bromophenyl phenyl ether	ND		ug/kg	190	--	1
Bis(2-chloroisopropyl)ether	ND		ug/kg	230	--	1
Bis(2-chloroethoxy)methane	ND		ug/kg	200	--	1
Hexachlorobutadiene	ND		ug/kg	190	--	1
Hexachloroethane	ND		ug/kg	150	--	1
Isophorone	ND		ug/kg	170	--	1
Naphthalene	ND		ug/kg	190	--	1
Nitrobenzene	ND		ug/kg	170	--	1
Bis(2-ethylhexyl)phthalate	ND		ug/kg	190	--	1
Butyl benzyl phthalate	ND		ug/kg	190	--	1
Di-n-butylphthalate	ND		ug/kg	190	--	1
Di-n-octylphthalate	ND		ug/kg	190	--	1
Diethyl phthalate	ND		ug/kg	190	--	1
Dimethyl phthalate	ND		ug/kg	190	--	1
Benzo(a)anthracene	220		ug/kg	110	--	1

Project Name: 6473-FULLER MIDDLE **Lab Number:** L1829113

Project Number: 6473 **Report Date:** 08/02/18

SAMPLE RESULTS

Lab ID: L1829113-06 Date Collected: 07/27/18 10:15

Client ID: B-206 0.5-4 FILL Date Received: 07/27/18

Sample Location: FRAMINGHAM, MA Field Prep: Not Specified

Sample Depth: 0.5-4

Parameter	Result	Qualifier	Units	RL	MDL	Dilution Factor
MCP Semivolatile Organics - Westborough Lab						
Benzo(a)pyrene	180		ug/kg	150	--	1
Benzo(b)fluoranthene	230		ug/kg	110	--	1
Benzo(k)fluoranthene	ND		ug/kg	110	--	1
Chrysene	220		ug/kg	110	--	1
Acenaphthylene	ND		ug/kg	150	--	1
Anthracene	ND		ug/kg	110	--	1
Benzo(ghi)perylene	ND		ug/kg	150	--	1
Fluorene	ND		ug/kg	190	--	1
Phenanthrene	400		ug/kg	110	--	1
Dibenzo(a,h)anthracene	ND		ug/kg	110	--	1
Indeno(1,2,3-cd)pyrene	ND		ug/kg	150	--	1
Pyrene	400		ug/kg	110	--	1
Aniline	ND		ug/kg	230	--	1
4-Chloroaniline	ND		ug/kg	190	--	1
Dibenzofuran	ND		ug/kg	190	--	1
2-Methylnaphthalene	ND		ug/kg	230	--	1
Acetophenone	ND		ug/kg	190	--	1
2,4,6-Trichlorophenol	ND		ug/kg	110	--	1
2-Chlorophenol	ND		ug/kg	190	--	1
2,4-Dichlorophenol	ND		ug/kg	170	--	1
2,4-Dimethylphenol	ND		ug/kg	190	--	1
2-Nitrophenol	ND		ug/kg	410	--	1
4-Nitrophenol	ND		ug/kg	260	--	1
2,4-Dinitrophenol	ND		ug/kg	910	--	1
Pentachlorophenol	ND		ug/kg	380	--	1
Phenol	ND		ug/kg	190	--	1
2-Methylphenol	ND		ug/kg	190	--	1
3-Methylphenol/4-Methylphenol	ND		ug/kg	270	--	1
2,4,5-Trichlorophenol	ND		ug/kg	190	--	1
Pyridine	ND		ug/kg	200	--	1

Project Name: 6473-FULLER MIDDLE **Lab Number:** L1829113

Project Number: 6473 **Report Date:** 08/02/18

SAMPLE RESULTS

Lab ID:	L1829113-06	Date Collected:	07/27/18 10:15
Client ID:	B-206 0.5-4 FILL	Date Received:	07/27/18
Sample Location:	FRAMINGHAM, MA	Field Prep:	Not Specified

Sample Depth: 0.5-4

Parameter	Result	Qualifier	Units	RL	MDL	Dilution Factor

MCP Semivolatile Organics - Westborough Lab

Surrogate	% Recovery	Qualifier	Acceptance Criteria
2-Fluorophenol	65		30-130
Phenol-d6	68		30-130
Nitrobenzene-d5	70		30-130
2-Fluorobiphenyl	64		30-130
2,4,6-Tribromophenol	63		30-130
4-Terphenyl-d14	46		30-130

Project Name: 6473-FULLER MIDDLE
Project Number: 6473
Lab Number: L1829113
Report Date: 08/02/18

SAMPLE RESULTS

Lab ID: L1829113-08
Client ID: B-208 0.6-4 FILL
Sample Location: FRAMINGHAM, MA

Date Collected: 07/27/18 13:10
Date Received: 07/27/18
Field Prep: Not Specified

Sample Depth: 0.6-4
Matrix: Fill
Analytical Method: 97,8270D
Analytical Date: 08/01/18 00:25
Analyst: JG
Percent Solids: 84%

Extraction Method: EPA 3546
Extraction Date: 07/30/18 15:35

Parameter	Result	Qualifier	Units	RL	MDL	Dilution Factor
MCP Semivolatile Organics - Westborough Lab						
Acenaphthene	ND		ug/kg	150	--	1
1,2,4-Trichlorobenzene	ND		ug/kg	190	--	1
Hexachlorobenzene	ND		ug/kg	120	--	1
Bis(2-chloroethyl)ether	ND		ug/kg	170	--	1
2-Chloronaphthalene	ND		ug/kg	190	--	1
1,2-Dichlorobenzene	ND		ug/kg	190	--	1
1,3-Dichlorobenzene	ND		ug/kg	190	--	1
1,4-Dichlorobenzene	ND		ug/kg	190	--	1
3,3'-Dichlorobenzidine	ND		ug/kg	190	--	1
2,4-Dinitrotoluene	ND		ug/kg	190	--	1
2,6-Dinitrotoluene	ND		ug/kg	190	--	1
Azobenzene	ND		ug/kg	190	--	1
Fluoranthene	ND		ug/kg	120	--	1
4-Bromophenyl phenyl ether	ND		ug/kg	190	--	1
Bis(2-chloroisopropyl)ether	ND		ug/kg	230	--	1
Bis(2-chloroethoxy)methane	ND		ug/kg	210	--	1
Hexachlorobutadiene	ND		ug/kg	190	--	1
Hexachloroethane	ND		ug/kg	150	--	1
Isophorone	ND		ug/kg	170	--	1
Naphthalene	ND		ug/kg	190	--	1
Nitrobenzene	ND		ug/kg	170	--	1
Bis(2-ethylhexyl)phthalate	ND		ug/kg	190	--	1
Butyl benzyl phthalate	ND		ug/kg	190	--	1
Di-n-butylphthalate	ND		ug/kg	190	--	1
Di-n-octylphthalate	ND		ug/kg	190	--	1
Diethyl phthalate	ND		ug/kg	190	--	1
Dimethyl phthalate	ND		ug/kg	190	--	1
Benzo(a)anthracene	ND		ug/kg	120	--	1

Project Name: 6473-FULLER MIDDLE **Lab Number:** L1829113

Project Number: 6473 **Report Date:** 08/02/18

SAMPLE RESULTS

Lab ID: L1829113-08 Date Collected: 07/27/18 13:10

Client ID: B-208 0.6-4 FILL Date Received: 07/27/18

Sample Location: FRAMINGHAM, MA Field Prep: Not Specified

Sample Depth: 0.6-4

Parameter	Result	Qualifier	Units	RL	MDL	Dilution Factor
MCP Semivolatile Organics - Westborough Lab						
Benzo(a)pyrene	ND		ug/kg	150	--	1
Benzo(b)fluoranthene	ND		ug/kg	120	--	1
Benzo(k)fluoranthene	ND		ug/kg	120	--	1
Chrysene	ND		ug/kg	120	--	1
Acenaphthylene	ND		ug/kg	150	--	1
Anthracene	ND		ug/kg	120	--	1
Benzo(ghi)perylene	ND		ug/kg	150	--	1
Fluorene	ND		ug/kg	190	--	1
Phenanthrene	ND		ug/kg	120	--	1
Dibenzo(a,h)anthracene	ND		ug/kg	120	--	1
Indeno(1,2,3-cd)pyrene	ND		ug/kg	150	--	1
Pyrene	ND		ug/kg	120	--	1
Aniline	ND		ug/kg	230	--	1
4-Chloroaniline	ND		ug/kg	190	--	1
Dibenzofuran	ND		ug/kg	190	--	1
2-Methylnaphthalene	ND		ug/kg	230	--	1
Acetophenone	ND		ug/kg	190	--	1
2,4,6-Trichlorophenol	ND		ug/kg	120	--	1
2-Chlorophenol	ND		ug/kg	190	--	1
2,4-Dichlorophenol	ND		ug/kg	170	--	1
2,4-Dimethylphenol	ND		ug/kg	190	--	1
2-Nitrophenol	ND		ug/kg	420	--	1
4-Nitrophenol	ND		ug/kg	270	--	1
2,4-Dinitrophenol	ND		ug/kg	930	--	1
Pentachlorophenol	ND		ug/kg	390	--	1
Phenol	ND		ug/kg	190	--	1
2-Methylphenol	ND		ug/kg	190	--	1
3-Methylphenol/4-Methylphenol	ND		ug/kg	280	--	1
2,4,5-Trichlorophenol	ND		ug/kg	190	--	1
Pyridine	ND		ug/kg	210	--	1

Project Name: 6473-FULLER MIDDLE **Lab Number:** L1829113

Project Number: 6473 **Report Date:** 08/02/18

SAMPLE RESULTS

Lab ID: L1829113-08 Date Collected: 07/27/18 13:10

Client ID: B-208 0.6-4 FILL Date Received: 07/27/18

Sample Location: FRAMINGHAM, MA Field Prep: Not Specified

Sample Depth: 0.6-4

Parameter	Result	Qualifier	Units	RL	MDL	Dilution Factor
MCP Semivolatile Organics - Westborough Lab						

Surrogate	% Recovery	Qualifier	Acceptance Criteria
2-Fluorophenol	76		30-130
Phenol-d6	78		30-130
Nitrobenzene-d5	76		30-130
2-Fluorobiphenyl	79		30-130
2,4,6-Tribromophenol	73		30-130
4-Terphenyl-d14	62		30-130

Project Name: 6473-FULLER MIDDLE
Project Number: 6473

Lab Number: L1829113
Report Date: 08/02/18

Method Blank Analysis
Batch Quality Control

Analytical Method: 97,8270D
Analytical Date: 07/31/18 00:56
Analyst: RC

Extraction Method: EPA 3546
Extraction Date: 07/30/18 10:16

Parameter	Result	Qualifier	Units	RL	MDL
MCP Semivolatile Organics - Westborough Lab for sample(s): 02,04,06,08 Batch: WG1140876-1					
Acenaphthene	ND		ug/kg	130	--
1,2,4-Trichlorobenzene	ND		ug/kg	160	--
Hexachlorobenzene	ND		ug/kg	99	--
Bis(2-chloroethyl)ether	ND		ug/kg	150	--
2-Chloronaphthalene	ND		ug/kg	160	--
1,2-Dichlorobenzene	ND		ug/kg	160	--
1,3-Dichlorobenzene	ND		ug/kg	160	--
1,4-Dichlorobenzene	ND		ug/kg	160	--
3,3'-Dichlorobenzidine	ND		ug/kg	160	--
2,4-Dinitrotoluene	ND		ug/kg	160	--
2,6-Dinitrotoluene	ND		ug/kg	160	--
Azobenzene	ND		ug/kg	160	--
Fluoranthene	ND		ug/kg	99	--
4-Bromophenyl phenyl ether	ND		ug/kg	160	--
Bis(2-chloroisopropyl)ether	ND		ug/kg	200	--
Bis(2-chloroethoxy)methane	ND		ug/kg	180	--
Hexachlorobutadiene	ND		ug/kg	160	--
Hexachloroethane	ND		ug/kg	130	--
Isophorone	ND		ug/kg	150	--
Naphthalene	ND		ug/kg	160	--
Nitrobenzene	ND		ug/kg	150	--
Bis(2-ethylhexyl)phthalate	ND		ug/kg	160	--
Butyl benzyl phthalate	ND		ug/kg	160	--
Di-n-butylphthalate	ND		ug/kg	160	--
Di-n-octylphthalate	ND		ug/kg	160	--
Diethyl phthalate	ND		ug/kg	160	--
Dimethyl phthalate	ND		ug/kg	160	--
Benzo(a)anthracene	ND		ug/kg	99	--
Benzo(a)pyrene	ND		ug/kg	130	--

Project Name: 6473-FULLER MIDDLE
Project Number: 6473

Lab Number: L1829113
Report Date: 08/02/18

Method Blank Analysis
Batch Quality Control

Analytical Method: 97,8270D
Analytical Date: 07/31/18 00:56
Analyst: RC

Extraction Method: EPA 3546
Extraction Date: 07/30/18 10:16

Parameter	Result	Qualifier	Units	RL	MDL
MCP Semivolatile Organics - Westborough Lab for sample(s): 02,04,06,08 Batch: WG1140876-1					
Benzo(b)fluoranthene	ND		ug/kg	99	--
Benzo(k)fluoranthene	ND		ug/kg	99	--
Chrysene	ND		ug/kg	99	--
Acenaphthylene	ND		ug/kg	130	--
Anthracene	ND		ug/kg	99	--
Benzo(ghi)perylene	ND		ug/kg	130	--
Fluorene	ND		ug/kg	160	--
Phenanthrene	ND		ug/kg	99	--
Dibenzo(a,h)anthracene	ND		ug/kg	99	--
Indeno(1,2,3-cd)pyrene	ND		ug/kg	130	--
Pyrene	ND		ug/kg	99	--
Aniline	ND		ug/kg	200	--
4-Chloroaniline	ND		ug/kg	160	--
Dibenzofuran	ND		ug/kg	160	--
2-Methylnaphthalene	ND		ug/kg	200	--
Acetophenone	ND		ug/kg	160	--
2,4,6-Trichlorophenol	ND		ug/kg	99	--
2-Chlorophenol	ND		ug/kg	160	--
2,4-Dichlorophenol	ND		ug/kg	150	--
2,4-Dimethylphenol	ND		ug/kg	160	--
2-Nitrophenol	ND		ug/kg	360	--
4-Nitrophenol	ND		ug/kg	230	--
2,4-Dinitrophenol	ND		ug/kg	790	--
Pentachlorophenol	ND		ug/kg	330	--
Phenol	ND		ug/kg	160	--
2-Methylphenol	ND		ug/kg	160	--
3-Methylphenol/4-Methylphenol	ND		ug/kg	240	--
2,4,5-Trichlorophenol	ND		ug/kg	160	--
Pyridine	ND		ug/kg	180	--

Project Name: 6473-FULLER MIDDLE
Project Number: 6473

Lab Number: L1829113
Report Date: 08/02/18

Method Blank Analysis
Batch Quality Control

Analytical Method: 97,8270D
Analytical Date: 07/31/18 00:56
Analyst: RC

Extraction Method: EPA 3546
Extraction Date: 07/30/18 10:16

Parameter	Result	Qualifier	Units	RL	MDL
MCP Semivolatile Organics - Westborough Lab for sample(s): 02,04,06,08 Batch: WG1140876-1					
Tentatively Identified Compounds					
No Tentatively Identified Compounds	ND		ug/kg		

Surrogate	%Recovery	Qualifier	Acceptance Criteria
2-Fluorophenol	60		30-130
Phenol-d6	63		30-130
Nitrobenzene-d5	65		30-130
2-Fluorobiphenyl	64		30-130
2,4,6-Tribromophenol	59		30-130
4-Terphenyl-d14	69		30-130

Lab Control Sample Analysis
Batch Quality Control

Project Name: 6473-FULLER MIDDLE
Project Number: 6473

Lab Number: L1829113
Report Date: 08/02/18

Parameter	LCS %Recovery	Qual	LCSD %Recovery	Qual	%Recovery Limits	RPD	Qual	RPD Limits
MCP Semivolatile Organics - Westborough Lab Associated sample(s): 02,04,06,08 Batch: WG1140876-2 WG1140876-3								
Acenaphthene	44		59		40-140	29		30
1,2,4-Trichlorobenzene	40		55		40-140	**32**	Q	30
Hexachlorobenzene	43		58		40-140	30		30
Bis(2-chloroethyl)ether	41		54		40-140	27		30
2-Chloronaphthalene	44		58		40-140	27		30
1,2-Dichlorobenzene	40		52		40-140	26		30
1,3-Dichlorobenzene	**38**	Q	50		40-140	27		30
1,4-Dichlorobenzene	**38**	Q	50		40-140	27		30
3,3'-Dichlorobenzidine	40		50		40-140	22		30
2,4-Dinitrotoluene	44		60		40-140	**31**	Q	30
2,6-Dinitrotoluene	45		60		40-140	29		30
Azobenzene	48		63		40-140	27		30
Fluoranthene	44		57		40-140	26		30
4-Bromophenyl phenyl ether	46		63		40-140	**31**	Q	30
Bis(2-chloroisopropyl)ether	48		63		40-140	27		30
Bis(2-chloroethoxy)methane	43		58		40-140	30		30
Hexachlorobutadiene	42		55		40-140	27		30
Hexachloroethane	40		52		40-140	26		30
Isophorone	44		60		40-140	**31**	Q	30
Naphthalene	41		55		40-140	29		30
Nitrobenzene	43		57		40-140	28		30
Bis(2-ethylhexyl)phthalate	48		64		40-140	29		30
Butyl benzyl phthalate	46		61		40-140	28		30

Lab Control Sample Analysis
Batch Quality Control

Project Name: 6473-FULLER MIDDLE
Project Number: 6473

Lab Number: L1829113
Report Date: 08/02/18

Parameter	LCS %Recovery	Qual	LCSD %Recovery	Qual	%Recovery Limits	RPD	Qual	RPD Limits
MCP Semivolatile Organics - Westborough Lab Associated sample(s): 02,04,06,08 Batch: WG1140876-2 WG1140876-3								
Di-n-butylphthalate	45		61		40-140	30		30
Di-n-octylphthalate	49		67		40-140	**31**	Q	30
Diethyl phthalate	45		61		40-140	30		30
Dimethyl phthalate	45		61		40-140	30		30
Benzo(a)anthracene	46		60		40-140	26		30
Benzo(a)pyrene	44		58		40-140	27		30
Benzo(b)fluoranthene	43		59		40-140	**31**	Q	30
Benzo(k)fluoranthene	44		57		40-140	26		30
Chrysene	45		58		40-140	25		30
Acenaphthylene	46		61		40-140	28		30
Anthracene	45		59		40-140	27		30
Benzo(ghi)perylene	44		59		40-140	29		30
Fluorene	44		59		40-140	29		30
Phenanthrene	44		58		40-140	27		30
Dibenzo(a,h)anthracene	44		60		40-140	**31**	Q	30
Indeno(1,2,3-cd)pyrene	46		60		40-140	26		30
Pyrene	44		57		40-140	26		30
Aniline	**34**	Q	42		40-140	21		30
4-Chloroaniline	52		62		40-140	18		30
Dibenzofuran	44		59		40-140	29		30
2-Methylnaphthalene	44		58		40-140	27		30
Acetophenone	43		57		40-140	28		30
2,4,6-Trichlorophenol	46		62		30-130	30		30

Lab Control Sample Analysis
Batch Quality Control

Project Name: 6473-FULLER MIDDLE
Project Number: 6473
Lab Number: L1829113
Report Date: 08/02/18

Parameter	LCS %Recovery	Qual	LCSD %Recovery	Qual	%Recovery Limits	RPD	Qual	RPD Limits
MCP Semivolatile Organics - Westborough Lab Associated sample(s): 02,04,06,08 Batch: WG1140876-2 WG1140876-3								
2-Chlorophenol	41		55		30-130	29		30
2,4-Dichlorophenol	46		61		30-130	28		30
2,4-Dimethylphenol	46		62		30-130	30		30
2-Nitrophenol	42		57		30-130	30		30
4-Nitrophenol	47		62		30-130	28		30
2,4-Dinitrophenol	32		47		30-130	**38**	Q	30
Pentachlorophenol	32		46		30-130	**36**	Q	30
Phenol	43		57		30-130	28		30
2-Methylphenol	44		59		30-130	29		30
3-Methylphenol/4-Methylphenol	47		64		30-130	**31**	Q	30
2,4,5-Trichlorophenol	45		61		30-130	30		30
Pyridine	33		44		30-130	29		30

Surrogate	LCS %Recovery	Qual	LCSD %Recovery	Qual	Acceptance Criteria
2-Fluorophenol	41		55		30-130
Phenol-d6	45		60		30-130
Nitrobenzene-d5	45		60		30-130
2-Fluorobiphenyl	47		63		30-130
2,4,6-Tribromophenol	44		61		30-130
4-Terphenyl-d14	50		66		30-130

PETROLEUM HYDROCARBONS

Project Name: 6473-FULLER MIDDLE
Project Number: 6473

Lab Number: L1829113
Report Date: 08/02/18

SAMPLE RESULTS

Lab ID: L1829113-02
Client ID: B-202 0.5-5 FILL
Sample Location: FRAMINGHAM, MA

Date Collected: 07/27/18 08:20
Date Received: 07/27/18
Field Prep: Not Specified

Sample Depth: 0.5-5
Matrix: Fill
Analytical Method: 1,8015D(M)
Analytical Date: 08/01/18 04:36
Analyst: MEO
Percent Solids: 83%

Extraction Method: EPA 3546
Extraction Date: 07/30/18 19:15

Parameter	Result	Qualifier	Units	RL	MDL	Dilution Factor
Petroleum Hydrocarbon Quantitation - Westborough Lab						
TPH	92200		ug/kg	38400	--	1

Surrogate	% Recovery	Qualifier	Acceptance Criteria
o-Terphenyl	62		40-140

Project Name: 6473-FULLER MIDDLE
Project Number: 6473

Lab Number: L1829113
Report Date: 08/02/18

SAMPLE RESULTS

Lab ID: L1829113-04
Client ID: B-207 .4-7.5 FILL
Sample Location: FRAMINGHAM, MA

Sample Depth: 0.4-7.5
Matrix: Fill
Analytical Method: 1,8015D(M)
Analytical Date: 07/31/18 17:13
Analyst: MEO
Percent Solids: 86%

Date Collected: 07/27/18 12:00
Date Received: 07/27/18
Field Prep: Not Specified

Extraction Method: EPA 3546
Extraction Date: 07/30/18 19:15

Parameter	Result	Qualifier	Units	RL	MDL	Dilution Factor
Petroleum Hydrocarbon Quantitation - Westborough Lab						
TPH	389000		ug/kg	36500	--	1

Surrogate	% Recovery	Qualifier	Acceptance Criteria
o-Terphenyl	81		40-140

Project Name: 6473-FULLER MIDDLE
Project Number: 6473

Lab Number: L1829113
Report Date: 08/02/18

SAMPLE RESULTS

Lab ID: L1829113-06
Client ID: B-206 0.5-4 FILL
Sample Location: FRAMINGHAM, MA

Date Collected: 07/27/18 10:15
Date Received: 07/27/18
Field Prep: Not Specified

Sample Depth: 0.5-4
Matrix: Fill
Analytical Method: 1,8015D(M)
Analytical Date: 07/31/18 17:45
Analyst: MEO
Percent Solids: 87%

Extraction Method: EPA 3546
Extraction Date: 07/30/18 19:15

Parameter	Result	Qualifier	Units	RL	MDL	Dilution Factor
Petroleum Hydrocarbon Quantitation - Westborough Lab						
TPH	171000		ug/kg	37700	--	1

Surrogate	% Recovery	Qualifier	Acceptance Criteria
o-Terphenyl	79		40-140

Project Name: 6473-FULLER MIDDLE
Project Number: 6473

Lab Number: L1829113
Report Date: 08/02/18

SAMPLE RESULTS

Lab ID: L1829113-08
Client ID: B-208 0.6-4 FILL
Sample Location: FRAMINGHAM, MA

Sample Depth: 0.6-4
Matrix: Fill
Analytical Method: 1,8015D(M)
Analytical Date: 07/31/18 18:18
Analyst: MEO
Percent Solids: 84%

Date Collected: 07/27/18 13:10
Date Received: 07/27/18
Field Prep: Not Specified

Extraction Method: EPA 3546
Extraction Date: 07/30/18 19:16

Parameter	Result	Qualifier	Units	RL	MDL	Dilution Factor
Petroleum Hydrocarbon Quantitation - Westborough Lab						
TPH	80100		ug/kg	37700	--	1

Surrogate	% Recovery	Qualifier	Acceptance Criteria
o-Terphenyl	95		40-140

Project Name: 6473-FULLER MIDDLE
Project Number: 6473

Lab Number: L1829113
Report Date: 08/02/18

Method Blank Analysis
Batch Quality Control

Analytical Method: 1,8015D(M)
Analytical Date: 07/31/18 11:25
Analyst: MEO

Extraction Method: EPA 3546
Extraction Date: 07/30/18 19:15

Parameter	Result	Qualifier	Units	RL	MDL
Petroleum Hydrocarbon Quantitation - Westborough Lab for sample(s): 02,04,06,08 Batch: WG1141062-1					
TPH	ND		ug/kg	32300	--

Surrogate	%Recovery	Qualifier	Acceptance Criteria
o-Terphenyl	71		40-140

Lab Control Sample Analysis
Batch Quality Control

Project Name: 6473-FULLER MIDDLE
Project Number: 6473

Lab Number: L1829113
Report Date: 08/02/18

Parameter	LCS %Recovery	Qual	LCSD %Recovery	Qual	%Recovery Limits	RPD	Qual	RPD Limits
Petroleum Hydrocarbon Quantitation - Westborough Lab Associated sample(s): 02,04,06,08 Batch: WG1141062-2								
TPH	71		-		40-140	-		40

Surrogate	LCS %Recovery	Qual	LCSD %Recovery	Qual	Acceptance Criteria
o-Terphenyl	67				40-140

PCBS

Project Name: 6473-FULLER MIDDLE
Project Number: 6473
Lab Number: L1829113
Report Date: 08/02/18

SAMPLE RESULTS

Lab ID: L1829113-02
Client ID: B-202 0.5-5 FILL
Sample Location: FRAMINGHAM, MA

Sample Depth: 0.5-5
Matrix: Fill
Analytical Method: 97,8082A
Analytical Date: 07/31/18 18:01
Analyst: WR
Percent Solids: 83%

Date Collected: 07/27/18 08:20
Date Received: 07/27/18
Field Prep: Not Specified

Extraction Method: EPA 3546
Extraction Date: 07/30/18 16:32
Cleanup Method: EPA 3665A
Cleanup Date: 07/30/18
Cleanup Method: EPA 3660B
Cleanup Date: 07/31/18

Parameter	Result	Qualifier	Units	RL	MDL	Dilution Factor	Column
MCP Polychlorinated Biphenyls - Westborough Lab							
Aroclor 1016	ND		ug/kg	39.4	--	1	A
Aroclor 1221	ND		ug/kg	39.4	--	1	A
Aroclor 1232	ND		ug/kg	39.4	--	1	A
Aroclor 1242	ND		ug/kg	39.4	--	1	A
Aroclor 1248	ND		ug/kg	39.4	--	1	A
Aroclor 1254	ND		ug/kg	39.4	--	1	A
Aroclor 1260	ND		ug/kg	39.4	--	1	A
Aroclor 1262	ND		ug/kg	39.4	--	1	A
Aroclor 1268	ND		ug/kg	39.4	--	1	A
PCBs, Total	ND		ug/kg	39.4	--	1	A

Surrogate	% Recovery	Qualifier	Acceptance Criteria	Column
2,4,5,6-Tetrachloro-m-xylene	80		30-150	A
Decachlorobiphenyl	61		30-150	A
2,4,5,6-Tetrachloro-m-xylene	77		30-150	B
Decachlorobiphenyl	71		30-150	B

Project Name: 6473-FULLER MIDDLE
Project Number: 6473
Lab Number: L1829113
Report Date: 08/02/18

SAMPLE RESULTS

Lab ID: L1829113-04
Client ID: B-207 .4-7.5 FILL
Sample Location: FRAMINGHAM, MA

Sample Depth: 0.4-7.5
Matrix: Fill
Analytical Method: 97,8082A
Analytical Date: 07/31/18 18:13
Analyst: WR
Percent Solids: 86%

Date Collected: 07/27/18 12:00
Date Received: 07/27/18
Field Prep: Not Specified

Extraction Method: EPA 3546
Extraction Date: 07/30/18 16:32
Cleanup Method: EPA 3665A
Cleanup Date: 07/30/18
Cleanup Method: EPA 3660B
Cleanup Date: 07/31/18

Parameter	Result	Qualifier	Units	RL	MDL	Dilution Factor	Column
MCP Polychlorinated Biphenyls - Westborough Lab							
Aroclor 1016	ND		ug/kg	37.2	--	1	A
Aroclor 1221	ND		ug/kg	37.2	--	1	A
Aroclor 1232	ND		ug/kg	37.2	--	1	A
Aroclor 1242	ND		ug/kg	37.2	--	1	A
Aroclor 1248	ND		ug/kg	37.2	--	1	A
Aroclor 1254	ND		ug/kg	37.2	--	1	B
Aroclor 1260	ND		ug/kg	37.2	--	1	B
Aroclor 1262	ND		ug/kg	37.2	--	1	A
Aroclor 1268	ND		ug/kg	37.2	--	1	A
PCBs, Total	ND		ug/kg	37.2	--	1	B

Surrogate	% Recovery	Qualifier	Acceptance Criteria	Column
2,4,5,6-Tetrachloro-m-xylene	81		30-150	A
Decachlorobiphenyl	74		30-150	A
2,4,5,6-Tetrachloro-m-xylene	75		30-150	B
Decachlorobiphenyl	89		30-150	B

Project Name: 6473-FULLER MIDDLE
Project Number: 6473

Lab Number: L1829113
Report Date: 08/02/18

SAMPLE RESULTS

Lab ID: L1829113-06
Client ID: B-206 0.5-4 FILL
Sample Location: FRAMINGHAM, MA

Sample Depth: 0.5-4
Matrix: Fill
Analytical Method: 97,8082A
Analytical Date: 07/31/18 18:26
Analyst: WR
Percent Solids: 87%

Date Collected: 07/27/18 10:15
Date Received: 07/27/18
Field Prep: Not Specified

Extraction Method: EPA 3546
Extraction Date: 07/30/18 16:32
Cleanup Method: EPA 3665A
Cleanup Date: 07/30/18
Cleanup Method: EPA 3660B
Cleanup Date: 07/31/18

Parameter	Result	Qualifier	Units	RL	MDL	Dilution Factor	Column
MCP Polychlorinated Biphenyls - Westborough Lab							
Aroclor 1016	ND		ug/kg	38.1	--	1	A
Aroclor 1221	ND		ug/kg	38.1	--	1	A
Aroclor 1232	ND		ug/kg	38.1	--	1	A
Aroclor 1242	ND		ug/kg	38.1	--	1	A
Aroclor 1248	ND		ug/kg	38.1	--	1	A
Aroclor 1254	ND		ug/kg	38.1	--	1	A
Aroclor 1260	ND		ug/kg	38.1	--	1	A
Aroclor 1262	ND		ug/kg	38.1	--	1	A
Aroclor 1268	ND		ug/kg	38.1	--	1	A
PCBs, Total	ND		ug/kg	38.1	--	1	A

Surrogate	% Recovery	Qualifier	Acceptance Criteria	Column
2,4,5,6-Tetrachloro-m-xylene	85		30-150	A
Decachlorobiphenyl	74		30-150	A
2,4,5,6-Tetrachloro-m-xylene	80		30-150	B
Decachlorobiphenyl	86		30-150	B

Project Name: 6473-FULLER MIDDLE
Project Number: 6473

Lab Number: L1829113
Report Date: 08/02/18

SAMPLE RESULTS

Lab ID: L1829113-08
Client ID: B-208 0.6-4 FILL
Sample Location: FRAMINGHAM, MA

Sample Depth: 0.6-4
Matrix: Fill
Analytical Method: 97,8082A
Analytical Date: 07/31/18 18:39
Analyst: WR
Percent Solids: 84%

Date Collected: 07/27/18 13:10
Date Received: 07/27/18
Field Prep: Not Specified

Extraction Method: EPA 3546
Extraction Date: 07/30/18 16:32
Cleanup Method: EPA 3665A
Cleanup Date: 07/30/18
Cleanup Method: EPA 3660B
Cleanup Date: 07/31/18

Parameter	Result	Qualifier	Units	RL	MDL	Dilution Factor	Column
MCP Polychlorinated Biphenyls - Westborough Lab							
Aroclor 1016	ND		ug/kg	38.0	--	1	A
Aroclor 1221	ND		ug/kg	38.0	--	1	A
Aroclor 1232	ND		ug/kg	38.0	--	1	A
Aroclor 1242	ND		ug/kg	38.0	--	1	A
Aroclor 1248	ND		ug/kg	38.0	--	1	A
Aroclor 1254	ND		ug/kg	38.0	--	1	A
Aroclor 1260	ND		ug/kg	38.0	--	1	B
Aroclor 1262	ND		ug/kg	38.0	--	1	A
Aroclor 1268	ND		ug/kg	38.0	--	1	A
PCBs, Total	ND		ug/kg	38.0	--	1	B

Surrogate	% Recovery	Qualifier	Acceptance Criteria	Column
2,4,5,6-Tetrachloro-m-xylene	78		30-150	A
Decachlorobiphenyl	64		30-150	A
2,4,5,6-Tetrachloro-m-xylene	76		30-150	B
Decachlorobiphenyl	80		30-150	B

Project Name: 6473-FULLER MIDDLE
Project Number: 6473

Lab Number: L1829113
Report Date: 08/02/18

Method Blank Analysis
Batch Quality Control

Analytical Method: 97,8082A
Analytical Date: 07/31/18 08:25
Analyst: AWS

Extraction Method: EPA 3546
Extraction Date: 07/30/18 16:32
Cleanup Method: EPA 3665A
Cleanup Date: 07/30/18
Cleanup Method: EPA 3660B
Cleanup Date: 07/31/18

Parameter	Result	Qualifier	Units	RL	MDL	Column
MCP Polychlorinated Biphenyls - Westborough Lab for sample(s): 02,04,06,08 Batch: WG1141017-1						
Aroclor 1016	ND		ug/kg	31.7	--	A
Aroclor 1221	ND		ug/kg	31.7	--	A
Aroclor 1232	ND		ug/kg	31.7	--	A
Aroclor 1242	ND		ug/kg	31.7	--	A
Aroclor 1248	ND		ug/kg	31.7	--	A
Aroclor 1254	ND		ug/kg	31.7	--	A
Aroclor 1260	ND		ug/kg	31.7	--	A
Aroclor 1262	ND		ug/kg	31.7	--	A
Aroclor 1268	ND		ug/kg	31.7	--	A
PCBs, Total	ND		ug/kg	31.7	--	A

Surrogate	%Recovery	Qualifier	Acceptance Criteria	Column
2,4,5,6-Tetrachloro-m-xylene	85		30-150	A
Decachlorobiphenyl	86		30-150	A
2,4,5,6-Tetrachloro-m-xylene	88		30-150	B
Decachlorobiphenyl	92		30-150	B

Lab Control Sample Analysis
Batch Quality Control

Project Name: 6473-FULLER MIDDLE
Project Number: 6473

Lab Number: L1829113
Report Date: 08/02/18

Parameter	LCS %Recovery	Qual	LCSD %Recovery	Qual	%Recovery Limits	RPD	Qual	RPD Limits	Column
MCP Polychlorinated Biphenyls - Westborough Lab Associated sample(s): 02,04,06,08 Batch: WG1141017-2 WG1141017-3									
Aroclor 1016	89		90		40-140	1		30	A
Aroclor 1260	88		88		40-140	0		30	A

Surrogate	LCS %Recovery	Qual	LCSD %Recovery	Qual	Acceptance Criteria	Column
2,4,5,6-Tetrachloro-m-xylene	87		87		30-150	A
Decachlorobiphenyl	90		88		30-150	A
2,4,5,6-Tetrachloro-m-xylene	89		88		30-150	B
Decachlorobiphenyl	96		93		30-150	B

METALS

Project Name: 6473-FULLER MIDDLE
Project Number: 6473
Lab Number: L1829113
Report Date: 08/02/18

SAMPLE RESULTS

Lab ID: L1829113-02
Client ID: B-202 0.5-5 FILL
Sample Location: FRAMINGHAM, MA

Date Collected: 07/27/18 08:20
Date Received: 07/27/18
Field Prep: Not Specified

Sample Depth: 0.5-5
Matrix: Fill
Percent Solids: 83%

Parameter	Result	Qualifier	Units	RL	MDL	Dilution Factor	Date Prepared	Date Analyzed	Prep Method	Analytical Method	Analyst
MCP Total Metals - Mansfield Lab											
Arsenic, Total	5.48		mg/kg	0.470	--	1	08/02/18 06:50	08/02/18 10:32	EPA 3050B	97,6010D	PE
Barium, Total	51.6		mg/kg	0.470	--	1	08/02/18 06:50	08/02/18 10:32	EPA 3050B	97,6010D	PE
Cadmium, Total	ND		mg/kg	0.470	--	1	08/02/18 06:50	08/02/18 10:32	EPA 3050B	97,6010D	PE
Chromium, Total	10.3		mg/kg	0.470	--	1	08/02/18 06:50	08/02/18 10:32	EPA 3050B	97,6010D	PE
Lead, Total	9.36		mg/kg	2.35	--	1	08/02/18 06:50	08/02/18 10:32	EPA 3050B	97,6010D	PE
Mercury, Total	ND		mg/kg	0.076	--	1	08/01/18 09:00	08/01/18 15:03	EPA 7471B	97,7471B	MG
Selenium, Total	ND		mg/kg	2.35	--	1	08/02/18 06:50	08/02/18 10:32	EPA 3050B	97,6010D	PE
Silver, Total	ND		mg/kg	0.470	--	1	08/02/18 06:50	08/02/18 10:32	EPA 3050B	97,6010D	PE

Project Name: 6473-FULLER MIDDLE
Project Number: 6473
Lab Number: L1829113
Report Date: 08/02/18

SAMPLE RESULTS

Lab ID: L1829113-04
Client ID: B-207 .4-7.5 FILL
Sample Location: FRAMINGHAM, MA

Date Collected: 07/27/18 12:00
Date Received: 07/27/18
Field Prep: Not Specified

Sample Depth: 0.4-7.5
Matrix: Fill
Percent Solids: 86%

Parameter	Result	Qualifier	Units	RL	MDL	Dilution Factor	Date Prepared	Date Analyzed	Prep Method	Analytical Method	Analyst
MCP Total Metals - Mansfield Lab											
Arsenic, Total	3.58		mg/kg	0.441	--	1	08/02/18 06:50	08/02/18 10:36	EPA 3050B	97,6010D	PE
Barium, Total	24.8		mg/kg	0.441	--	1	08/02/18 06:50	08/02/18 10:36	EPA 3050B	97,6010D	PE
Cadmium, Total	ND		mg/kg	0.441	--	1	08/02/18 06:50	08/02/18 10:36	EPA 3050B	97,6010D	PE
Chromium, Total	10.3		mg/kg	0.441	--	1	08/02/18 06:50	08/02/18 10:36	EPA 3050B	97,6010D	PE
Lead, Total	39.0		mg/kg	2.21	--	1	08/02/18 06:50	08/02/18 10:36	EPA 3050B	97,6010D	PE
Mercury, Total	0.073		mg/kg	0.073	--	1	08/01/18 09:00	08/01/18 15:05	EPA 7471B	97,7471B	MG
Selenium, Total	ND		mg/kg	2.21	--	1	08/02/18 06:50	08/02/18 10:36	EPA 3050B	97,6010D	PE
Silver, Total	ND		mg/kg	0.441	--	1	08/02/18 06:50	08/02/18 10:36	EPA 3050B	97,6010D	PE

Project Name: 6473-FULLER MIDDLE
Lab Number: L1829113
Project Number: 6473
Report Date: 08/02/18

SAMPLE RESULTS

Lab ID: L1829113-06
Client ID: B-206 0.5-4 FILL
Sample Location: FRAMINGHAM, MA

Date Collected: 07/27/18 10:15
Date Received: 07/27/18
Field Prep: Not Specified

Sample Depth: 0.5-4
Matrix: Fill
Percent Solids: 87%

Parameter	Result	Qualifier	Units	RL	MDL	Dilution Factor	Date Prepared	Date Analyzed	Prep Method	Analytical Method	Analyst
MCP Total Metals - Mansfield Lab											
Arsenic, Total	3.92		mg/kg	0.450	--	1	08/02/18 06:50	08/02/18 10:50	EPA 3050B	97,6010D	PE
Barium, Total	52.5		mg/kg	0.450	--	1	08/02/18 06:50	08/02/18 10:50	EPA 3050B	97,6010D	PE
Cadmium, Total	ND		mg/kg	0.450	--	1	08/02/18 06:50	08/02/18 10:50	EPA 3050B	97,6010D	PE
Chromium, Total	18.0		mg/kg	0.450	--	1	08/02/18 06:50	08/02/18 10:50	EPA 3050B	97,6010D	PE
Lead, Total	22.0		mg/kg	2.25	--	1	08/02/18 06:50	08/02/18 10:50	EPA 3050B	97,6010D	PE
Mercury, Total	ND		mg/kg	0.073	--	1	08/01/18 09:00	08/01/18 15:07	EPA 7471B	97,7471B	MG
Selenium, Total	ND		mg/kg	2.25	--	1	08/02/18 06:50	08/02/18 10:50	EPA 3050B	97,6010D	PE
Silver, Total	ND		mg/kg	0.450	--	1	08/02/18 06:50	08/02/18 10:50	EPA 3050B	97,6010D	PE

Project Name: 6473-FULLER MIDDLE
Project Number: 6473
Lab Number: L1829113
Report Date: 08/02/18

SAMPLE RESULTS

Lab ID: L1829113-08
Client ID: B-208 0.6-4 FILL
Sample Location: FRAMINGHAM, MA

Date Collected: 07/27/18 13:10
Date Received: 07/27/18
Field Prep: Not Specified

Sample Depth: 0.6-4
Matrix: Fill
Percent Solids: 84%

Parameter	Result	Qualifier	Units	RL	MDL	Dilution Factor	Date Prepared	Date Analyzed	Prep Method	Analytical Method	Analyst
MCP Total Metals - Mansfield Lab											
Arsenic, Total	4.75		mg/kg	0.464	--	1	08/02/18 06:50	08/02/18 10:54	EPA 3050B	97,6010D	PE
Barium, Total	27.4		mg/kg	0.464	--	1	08/02/18 06:50	08/02/18 10:54	EPA 3050B	97,6010D	PE
Cadmium, Total	ND		mg/kg	0.464	--	1	08/02/18 06:50	08/02/18 10:54	EPA 3050B	97,6010D	PE
Chromium, Total	12.3		mg/kg	0.464	--	1	08/02/18 06:50	08/02/18 10:54	EPA 3050B	97,6010D	PE
Lead, Total	13.3		mg/kg	2.32	--	1	08/02/18 06:50	08/02/18 10:54	EPA 3050B	97,6010D	PE
Mercury, Total	ND		mg/kg	0.075	--	1	08/01/18 09:00	08/01/18 15:09	EPA 7471B	97,7471B	MG
Selenium, Total	ND		mg/kg	2.32	--	1	08/02/18 06:50	08/02/18 10:54	EPA 3050B	97,6010D	PE
Silver, Total	ND		mg/kg	0.464	--	1	08/02/18 06:50	08/02/18 10:54	EPA 3050B	97,6010D	PE

Project Name: 6473-FULLER MIDDLE **Lab Number:** L1829113

Project Number: 6473 **Report Date:** 08/02/18

Method Blank Analysis
Batch Quality Control

Parameter	Result	Qualifier	Units	RL	MDL	Dilution Factor	Date Prepared	Date Analyzed	Analytical Method	Analyst
MCP Total Metals - Mansfield Lab for sample(s): 02,04,06,08 Batch: WG1141675-1										
Mercury, Total	ND		mg/kg	0.083	--	1	08/01/18 09:00	08/01/18 14:58	97,7471B	MG

Prep Information

Digestion Method: EPA 7471B

Parameter	Result	Qualifier	Units	RL	MDL	Dilution Factor	Date Prepared	Date Analyzed	Analytical Method	Analyst
MCP Total Metals - Mansfield Lab for sample(s): 02,04,06,08 Batch: WG1142037-1										
Arsenic, Total	ND		mg/kg	0.400	--	1	08/02/18 06:50	08/02/18 09:56	97,6010D	PE
Barium, Total	ND		mg/kg	0.400	--	1	08/02/18 06:50	08/02/18 09:56	97,6010D	PE
Cadmium, Total	ND		mg/kg	0.400	--	1	08/02/18 06:50	08/02/18 09:56	97,6010D	PE
Chromium, Total	ND		mg/kg	0.400	--	1	08/02/18 06:50	08/02/18 09:56	97,6010D	PE
Lead, Total	ND		mg/kg	2.00	--	1	08/02/18 06:50	08/02/18 09:56	97,6010D	PE
Selenium, Total	ND		mg/kg	2.00	--	1	08/02/18 06:50	08/02/18 09:56	97,6010D	PE
Silver, Total	ND		mg/kg	0.400	--	1	08/02/18 06:50	08/02/18 09:56	97,6010D	PE

Prep Information

Digestion Method: EPA 3050B

Lab Control Sample Analysis
Batch Quality Control

Project Name: 6473-FULLER MIDDLE
Project Number: 6473

Lab Number: L1829113
Report Date: 08/02/18

Parameter	LCS %Recovery	Qual	LCSD %Recovery	Qual	%Recovery Limits	RPD	Qual	RPD Limits
MCP Total Metals - Mansfield Lab Associated sample(s): 02,04,06,08 Batch: WG1141675-2 WG1141675-3 SRM Lot Number: D098-540								
Mercury, Total	117		106		50-149	10		30
MCP Total Metals - Mansfield Lab Associated sample(s): 02,04,06,08 Batch: WG1142037-2 WG1142037-3 SRM Lot Number: D098-540								
Arsenic, Total	99		104		83-117	5		30
Barium, Total	93		98		82-118	5		30
Cadmium, Total	100		102		82-117	2		30
Chromium, Total	96		101		83-119	5		30
Lead, Total	96		100		82-117	4		30
Selenium, Total	102		106		78-121	4		30
Silver, Total	103		108		80-120	5		30

INORGANICS
&
MISCELLANEOUS

Project Name:	6473-FULLER MIDDLE	**Lab Number:**	L1829113
Project Number:	6473	**Report Date:**	08/02/18

SAMPLE RESULTS

Lab ID:	L1829113-02	Date Collected:	07/27/18 08:20
Client ID:	B-202 0.5-5 FILL	Date Received:	07/27/18
Sample Location:	FRAMINGHAM, MA	Field Prep:	Not Specified
Sample Depth:	0.5-5		
Matrix:	Fill		

Test Material Information

Source of Material:	Unknown
Description of Material:	Non-Metallic - Damp Soil
Particle Size:	Medium
Preliminary Burning Time (sec):	120

Parameter	Result	Date Analyzed	Analytical Method	Analyst
Ignitability of Solids - Westborough Lab				
Ignitability	NI	07/28/18 09:36	1,1030	GD

Project Name:	6473-FULLER MIDDLE	**Lab Number:**	L1829113
Project Number:	6473	**Report Date:**	08/02/18

SAMPLE RESULTS

Lab ID:	L1829113-04	Date Collected:	07/27/18 12:00
Client ID:	B-207 .4-7.5 FILL	Date Received:	07/27/18
Sample Location:	FRAMINGHAM, MA	Field Prep:	Not Specified
Sample Depth:	0.4-7.5		
Matrix:	Fill		

Test Material Information

Source of Material:	Unknown
Description of Material:	Non-Metallic - Damp Soil
Particle Size:	Medium
Preliminary Burning Time (sec):	120

Parameter	Result	Date Analyzed	Analytical Method	Analyst
Ignitability of Solids - Westborough Lab				
Ignitability	NI	07/28/18 09:36	1,1030	GD

Project Name:	6473-FULLER MIDDLE	**Lab Number:**	L1829113
Project Number:	6473	**Report Date:**	08/02/18

SAMPLE RESULTS

Lab ID:	L1829113-06	Date Collected:	07/27/18 10:15
Client ID:	B-206 0.5-4 FILL	Date Received:	07/27/18
Sample Location:	FRAMINGHAM, MA	Field Prep:	Not Specified
Sample Depth:	0.5-4		
Matrix:	Fill		

Test Material Information

Source of Material:	Unknown
Description of Material:	Non-Metallic - Damp Soil
Particle Size:	Medium
Preliminary Burning Time (sec):	120

Parameter	Result	Date Analyzed	Analytical Method	Analyst
Ignitability of Solids - Westborough Lab				
Ignitability	NI	07/28/18 09:36	1,1030	GD

Project Name: 6473-FULLER MIDDLE
Project Number: 6473

Lab Number: L1829113
Report Date: 08/02/18

SAMPLE RESULTS

Lab ID: L1829113-08
Client ID: B-208 0.6-4 FILL
Sample Location: FRAMINGHAM, MA

Date Collected: 07/27/18 13:10
Date Received: 07/27/18
Field Prep: Not Specified

Sample Depth: 0.6-4
Matrix: Fill

Test Material Information

Source of Material: Unknown
Description of Material: Non-Metallic - Damp Soil
Particle Size: Medium
Preliminary Burning Time (sec): 120

Parameter	Result	Date Analyzed	Analytical Method	Analyst
Ignitability of Solids - Westborough Lab				
Ignitability	NI	07/28/18 09:36	1,1030	GD

Project Name: 6473-FULLER MIDDLE
Project Number: 6473

Lab Number: L1829113
Report Date: 08/02/18

SAMPLE RESULTS

Lab ID: L1829113-01
Client ID: B-202, S-3 4-5'
Sample Location: FRAMINGHAM, MA

Date Collected: 07/27/18 08:20
Date Received: 07/27/18
Field Prep: Not Specified

Sample Depth: 4-5
Matrix: Fill

Parameter	Result	Qualifier	Units	RL	MDL	Dilution Factor	Date Prepared	Date Analyzed	Analytical Method	Analyst
General Chemistry - Westborough Lab										
Solids, Total	80.3		%	0.100	NA	1	-	07/31/18 10:05	121,2540G	RI

Project Name: 6473-FULLER MIDDLE
Project Number: 6473

Lab Number: L1829113
Report Date: 08/02/18

SAMPLE RESULTS

Lab ID: L1829113-02
Client ID: B-202 0.5-5 FILL
Sample Location: FRAMINGHAM, MA

Date Collected: 07/27/18 08:20
Date Received: 07/27/18
Field Prep: Not Specified

Sample Depth: 0.5-5
Matrix: Fill

Parameter	Result	Qualifier	Units	RL	MDL	Dilution Factor	Date Prepared	Date Analyzed	Analytical Method	Analyst
General Chemistry - Westborough Lab										
Specific Conductance @ 25 C	30		umhos/cm	10	--	1	-	07/28/18 04:12	1,9050A	UN
Solids, Total	82.7		%	0.100	NA	1	-	07/31/18 10:05	121,2540G	RI
pH (H)	6.4		SU	-	NA	1	-	07/28/18 03:45	1,9045D	MA
Cyanide, Reactive	ND		mg/kg	10	--	1	07/31/18 21:05	07/31/18 23:57	125,7.3	TL
Sulfide, Reactive	ND		mg/kg	10	--	1	07/31/18 21:05	07/31/18 23:49	125,7.3	TL

Project Name: 6473-FULLER MIDDLE
Project Number: 6473

Lab Number: L1829113
Report Date: 08/02/18

SAMPLE RESULTS

Lab ID: L1829113-03
Client ID: B-207, S-2 2-4
Sample Location: FRAMINGHAM, MA

Date Collected: 07/27/18 12:00
Date Received: 07/27/18
Field Prep: Not Specified

Sample Depth: 2-4
Matrix: Fill

Parameter	Result	Qualifier	Units	RL	MDL	Dilution Factor	Date Prepared	Date Analyzed	Analytical Method	Analyst
General Chemistry - Westborough Lab										
Solids, Total	86.3		%	0.100	NA	1	-	07/31/18 10:05	121,2540G	RI

Project Name: 6473-FULLER MIDDLE
Project Number: 6473

Lab Number: L1829113
Report Date: 08/02/18

SAMPLE RESULTS

Lab ID: L1829113-04
Client ID: B-207 .4-7.5 FILL
Sample Location: FRAMINGHAM, MA

Date Collected: 07/27/18 12:00
Date Received: 07/27/18
Field Prep: Not Specified

Sample Depth: 0.4-7.5
Matrix: Fill

Parameter	Result	Qualifier	Units	RL	MDL	Dilution Factor	Date Prepared	Date Analyzed	Analytical Method	Analyst
General Chemistry - Westborough Lab										
Specific Conductance @ 25 C	260		umhos/cm	10	--	1	-	07/28/18 04:12	1,9050A	UN
Solids, Total	86.4		%	0.100	NA	1	-	07/31/18 10:05	121,2540G	RI
pH (H)	7.0		SU	-	NA	1	-	07/28/18 03:45	1,9045D	MA
Cyanide, Reactive	ND		mg/kg	10	--	1	07/31/18 21:05	07/31/18 23:57	125,7.3	TL
Sulfide, Reactive	ND		mg/kg	10	--	1	07/31/18 21:05	07/31/18 23:49	125,7.3	TL

Project Name: 6473-FULLER MIDDLE
Project Number: 6473

Lab Number: L1829113
Report Date: 08/02/18

SAMPLE RESULTS

Lab ID: L1829113-05
Client ID: B-206, S-2 2-4
Sample Location: FRAMINGHAM, MA

Date Collected: 07/27/18 10:15
Date Received: 07/27/18
Field Prep: Not Specified

Sample Depth: 2.-4
Matrix: Fill

Parameter	Result	Qualifier	Units	RL	MDL	Dilution Factor	Date Prepared	Date Analyzed	Analytical Method	Analyst
General Chemistry - Westborough Lab										
Solids, Total	87.7		%	0.100	NA	1	-	07/31/18 10:05	121,2540G	RI

Project Name: 6473-FULLER MIDDLE
Project Number: 6473

Lab Number: L1829113
Report Date: 08/02/18

SAMPLE RESULTS

Lab ID: L1829113-06
Client ID: B-206 0.5-4 FILL
Sample Location: FRAMINGHAM, MA

Date Collected: 07/27/18 10:15
Date Received: 07/27/18
Field Prep: Not Specified

Sample Depth: 0.5-4
Matrix: Fill

Parameter	Result	Qualifier	Units	RL	MDL	Dilution Factor	Date Prepared	Date Analyzed	Analytical Method	Analyst
General Chemistry - Westborough Lab										
Specific Conductance @ 25 C	220		umhos/cm	10	--	1	-	07/28/18 04:12	1,9050A	UN
Solids, Total	86.8		%	0.100	NA	1	-	07/31/18 10:05	121,2540G	RI
pH (H)	8.1		SU	-	NA	1	-	07/28/18 03:45	1,9045D	MA
Cyanide, Reactive	ND		mg/kg	10	--	1	07/31/18 21:05	07/31/18 23:57	125,7.3	TL
Sulfide, Reactive	ND		mg/kg	10	--	1	07/31/18 21:05	07/31/18 23:50	125,7.3	TL

Project Name: 6473-FULLER MIDDLE
Project Number: 6473

Lab Number: L1829113
Report Date: 08/02/18

SAMPLE RESULTS

Lab ID: L1829113-07
Client ID: B-208, S-2 2-4
Sample Location: FRAMINGHAM, MA

Date Collected: 07/27/18 14:10
Date Received: 07/27/18
Field Prep: Not Specified

Sample Depth: 2-4
Matrix: Fill

Parameter	Result	Qualifier	Units	RL	MDL	Dilution Factor	Date Prepared	Date Analyzed	Analytical Method	Analyst
General Chemistry - Westborough Lab										
Solids, Total	90.2		%	0.100	NA	1	-	07/31/18 10:05	121,2540G	RI

Project Name: 6473-FULLER MIDDLE
Project Number: 6473

Lab Number: L1829113
Report Date: 08/02/18

SAMPLE RESULTS

Lab ID: L1829113-08
Client ID: B-208 0.6-4 FILL
Sample Location: FRAMINGHAM, MA

Date Collected: 07/27/18 13:10
Date Received: 07/27/18
Field Prep: Not Specified

Sample Depth: 0.6-4
Matrix: Fill

Parameter	Result	Qualifier	Units	RL	MDL	Dilution Factor	Date Prepared	Date Analyzed	Analytical Method	Analyst
General Chemistry - Westborough Lab										
Specific Conductance @ 25 C	140		umhos/cm	10	--	1	-	07/28/18 04:12	1,9050A	UN
Solids, Total	83.6		%	0.100	NA	1	-	07/31/18 10:05	121,2540G	RI
pH (H)	7.0		SU	-	NA	1	-	07/28/18 03:45	1,9045D	MA
Cyanide, Reactive	ND		mg/kg	10	--	1	07/31/18 21:05	07/31/18 23:58	125,7.3	TL
Sulfide, Reactive	ND		mg/kg	10	--	1	07/31/18 21:05	07/31/18 23:50	125,7.3	TL

Project Name: 6473-FULLER MIDDLE **Lab Number:** L1829113

Project Number: 6473 **Report Date:** 08/02/18

Method Blank Analysis
Batch Quality Control

Parameter	Result	Qualifier	Units	RL	MDL	Dilution Factor	Date Prepared	Date Analyzed	Analytical Method	Analyst
General Chemistry - Westborough Lab for sample(s): 02,04,06,08 Batch: WG1141437-1										
Sulfide, Reactive	ND		mg/kg	10	--	1	07/31/18 21:05	07/31/18 23:46	125,7.3	TL
General Chemistry - Westborough Lab for sample(s): 02,04,06,08 Batch: WG1141443-1										
Cyanide, Reactive	ND		mg/kg	10	--	1	07/31/18 21:05	07/31/18 23:55	125,7.3	TL

Lab Control Sample Analysis
Batch Quality Control

Project Name: 6473-FULLER MIDDLE
Project Number: 6473

Lab Number: L1829113
Report Date: 08/02/18

Parameter	LCS %Recovery	Qual	LCSD %Recovery	Qual	%Recovery Limits	RPD	Qual	RPD Limits
General Chemistry - Westborough Lab Associated sample(s): 02,04,06,08 Batch: WG1140475-1								
Specific Conductance	100		-		99-101	-		
General Chemistry - Westborough Lab Associated sample(s): 02,04,06,08 Batch: WG1140488-1								
pH	100		-		99-101	-		
General Chemistry - Westborough Lab Associated sample(s): 02,04,06,08 Batch: WG1141437-2								
Sulfide, Reactive	116		-		60-125	-		40
General Chemistry - Westborough Lab Associated sample(s): 02,04,06,08 Batch: WG1141443-2								
Cyanide, Reactive	94		-		30-125	-		40

Lab Duplicate Analysis

Batch Quality Control

Project Name: 6473-FULLER MIDDLE

Project Number: 6473

Lab Number: L1829113

Report Date: 08/02/18

Parameter	Native Sample	Duplicate Sample	Units	RPD	Qual	RPD Limits
General Chemistry - Westborough Lab Associated sample(s): 02,04,06,08 QC Batch ID: WG1140475-2 QC Sample: L1829113-02 Client ID: B-202 0.5-5 FILL						
Specific Conductance @ 25 C	30	29	umhos/cm	3		20
General Chemistry - Westborough Lab Associated sample(s): 02,04,06,08 QC Batch ID: WG1140488-2 QC Sample: L1829113-02 Client ID: B-202 0.5-5 FILL						
pH (H)	6.4	6.5	SU	2		5
General Chemistry - Westborough Lab Associated sample(s): 01-08 QC Batch ID: WG1141234-1 QC Sample: L1829113-02 Client ID: B-202 0.5-5 FILL						
Solids, Total	82.7	83.0	%	0		20
General Chemistry - Westborough Lab Associated sample(s): 02,04,06,08 QC Batch ID: WG1141437-3 QC Sample: L1829113-06 Client ID: B-206 0.5-4 FILL						
Sulfide, Reactive	ND	ND	mg/kg	NC		40
General Chemistry - Westborough Lab Associated sample(s): 02,04,06,08 QC Batch ID: WG1141443-3 QC Sample: L1829113-06 Client ID: B-206 0.5-4 FILL						
Cyanide, Reactive	ND	ND	mg/kg	NC		40

Project Name: 6473-FULLER MIDDLE
Project Number: 6473

Lab Number: L1829113
Report Date: 08/02/18

Sample Receipt and Container Information

Were project specific reporting limits specified? YES

Cooler Information

Cooler	Custody Seal
A	Absent

Container Information

Container ID	Container Type	Cooler	Initial pH	Final pH	Temp deg C	Pres	Seal	Frozen Date/Time	Analysis(*)
L1829113-01A	Vial MeOH preserved	A	NA		5.4	Y	Absent		MCP-8260HLW-10(14)
L1829113-01B	Vial water preserved	A	NA		5.4	Y	Absent	28-JUL-18 03:47	MCP-8260HLW-10(14)
L1829113-01C	Vial water preserved	A	NA		5.4	Y	Absent	28-JUL-18 03:47	MCP-8260HLW-10(14)
L1829113-01D	Plastic 2oz unpreserved for TS	A	NA		5.4	Y	Absent		TS(7)
L1829113-02A	Metals Only-Glass 60mL/2oz unpreserved	A	NA		5.4	Y	Absent		MCP-CR-6010T-10(180),MCP-AS-6010T-10(180),MCP-7471T-10(28),MCP-CD-6010T-10(180),MCP-AG-6010T-10(180),MCP-SE-6010T-10(180),MCP-BA-6010T-10(180),MCP-PB-6010T-10(180)
L1829113-02B	Glass 500ml/16oz unpreserved	A	NA		5.4	Y	Absent		IGNIT-1030(14),MCP-8082-10(365),REACTS(14),MCP-8270-10(14),TS(7),PH-9045(1),REACTCN(14),TPH-DRO-D(14),COND-9050(28)
L1829113-03A	Vial MeOH preserved	A	NA		5.4	Y	Absent		MCP-8260HLW-10(14)
L1829113-03B	Vial water preserved	A	NA		5.4	Y	Absent	28-JUL-18 03:47	MCP-8260HLW-10(14)
L1829113-03C	Vial water preserved	A	NA		5.4	Y	Absent	28-JUL-18 03:47	MCP-8260HLW-10(14)
L1829113-03D	Plastic 2oz unpreserved for TS	A	NA		5.4	Y	Absent		TS(7)
L1829113-04A	Metals Only-Glass 60mL/2oz unpreserved	A	NA		5.4	Y	Absent		MCP-CR-6010T-10(180),MCP-AS-6010T-10(180),MCP-7471T-10(28),MCP-CD-6010T-10(180),MCP-AG-6010T-10(180),MCP-SE-6010T-10(180),MCP-BA-6010T-10(180),MCP-PB-6010T-10(180)
L1829113-04B	Glass 500ml/16oz unpreserved	A	NA		5.4	Y	Absent		IGNIT-1030(14),MCP-8082-10(365),REACTS(14),MCP-8270-10(14),TS(7),PH-9045(1),REACTCN(14),TPH-DRO-D(14),COND-9050(28)
L1829113-05A	Vial MeOH preserved	A	NA		5.4	Y	Absent		MCP-8260HLW-10(14)
L1829113-05B	Vial water preserved	A	NA		5.4	Y	Absent	28-JUL-18 03:47	MCP-8260HLW-10(14)
L1829113-05C	Vial water preserved	A	NA		5.4	Y	Absent	28-JUL-18 03:47	MCP-8260HLW-10(14)
L1829113-05D	Plastic 2oz unpreserved for TS	A	NA		5.4	Y	Absent		TS(7)

*Values in parentheses indicate holding time in days

Project Name: 6473-FULLER MIDDLE
Project Number: 6473

Lab Number: L1829113
Report Date: 08/02/18

Container Information

Container ID	Container Type	Cooler	Initial pH	Final pH	Temp deg C	Pres	Seal	Frozen Date/Time	Analysis(*)
L1829113-06A	Metals Only-Glass 60mL/2oz unpreserved	A	NA		5.4	Y	Absent		MCP-CR-6010T-10(180),MCP-AS-6010T-10(180),MCP-7471T-10(28),MCP-CD-6010T-10(180),MCP-AG-6010T-10(180),MCP-SE-6010T-10(180),MCP-BA-6010T-10(180),MCP-PB-6010T-10(180)
L1829113-06B	Glass 500ml/16oz unpreserved	A	NA		5.4	Y	Absent		IGNIT-1030(14),MCP-8082-10(365),REACTS(14),MCP-8270-10(14),TS(7),PH-9045(1),REACTCN(14),TPH-DRO-D(14),COND-9050(28)
L1829113-07A	Vial MeOH preserved	A	NA		5.4	Y	Absent		MCP-8260HLW-10(14)
L1829113-07B	Vial water preserved	A	NA		5.4	Y	Absent	28-JUL-18 03:47	MCP-8260HLW-10(14)
L1829113-07C	Vial water preserved	A	NA		5.4	Y	Absent	28-JUL-18 03:47	MCP-8260HLW-10(14)
L1829113-07D	Plastic 2oz unpreserved for TS	A	NA		5.4	Y	Absent		TS(7)
L1829113-08A	Metals Only-Glass 60mL/2oz unpreserved	A	NA		5.4	Y	Absent		MCP-CR-6010T-10(180),MCP-AS-6010T-10(180),MCP-7471T-10(28),MCP-CD-6010T-10(180),MCP-AG-6010T-10(180),MCP-SE-6010T-10(180),MCP-BA-6010T-10(180),MCP-PB-6010T-10(180)
L1829113-08B	Glass 500ml/16oz unpreserved	A	NA		5.4	Y	Absent		IGNIT-1030(14),MCP-8082-10(365),REACTS(14),MCP-8270-10(14),TS(7),PH-9045(1),REACTCN(14),TPH-DRO-D(14),COND-9050(28)

*Values in parentheses indicate holding time in days

Project Name:	6473-FULLER MIDDLE	**Lab Number:**	L1829113
Project Number:	6473	**Report Date:**	08/02/18

GLOSSARY

Acronyms

EDL	- Estimated Detection Limit: This value represents the level to which target analyte concentrations are reported as estimated values, when those target analyte concentrations are quantified below the reporting limit (RL). The EDL includes any adjustments from dilutions, concentrations or moisture content, where applicable. The use of EDLs is specific to the analysis of PAHs using Solid-Phase Microextraction (SPME).
EMPC	- Estimated Maximum Possible Concentration: The concentration that results from the signal present at the retention time of an analyte when the ions meet all of the identification criteria except the ion abundance ratio criteria. An EMPC is a worst-case estimate of the concentration.
EPA	- Environmental Protection Agency.
LCS	- Laboratory Control Sample: A sample matrix, free from the analytes of interest, spiked with verified known amounts of analytes or a material containing known and verified amounts of analytes.
LCSD	- Laboratory Control Sample Duplicate: Refer to LCS.
LFB	- Laboratory Fortified Blank: A sample matrix, free from the analytes of interest, spiked with verified known amounts of analytes or a material containing known and verified amounts of analytes.
MDL	- Method Detection Limit: This value represents the level to which target analyte concentrations are reported as estimated values, when those target analyte concentrations are quantified below the reporting limit (RL). The MDL includes any adjustments from dilutions, concentrations or moisture content, where applicable.
MS	- Matrix Spike Sample: A sample prepared by adding a known mass of target analyte to a specified amount of matrix sample for which an independent estimate of target analyte concentration is available.
MSD	- Matrix Spike Sample Duplicate: Refer to MS.
NA	- Not Applicable.
NC	- Not Calculated: Term is utilized when one or more of the results utilized in the calculation are non-detect at the parameter's reporting unit.
NDPA/DPA	- N-Nitrosodiphenylamine/Diphenylamine.
NI	- Not Ignitable.
NP	- Non-Plastic: Term is utilized for the analysis of Atterberg Limits in soil.
RL	- Reporting Limit: The value at which an instrument can accurately measure an analyte at a specific concentration. The RL includes any adjustments from dilutions, concentrations or moisture content, where applicable.
RPD	- Relative Percent Difference: The results from matrix and/or matrix spike duplicates are primarily designed to assess the precision of analytical results in a given matrix and are expressed as relative percent difference (RPD). Values which are less than five times the reporting limit for any individual parameter are evaluated by utilizing the absolute difference between the values; although the RPD value will be provided in the report.
SRM	- Standard Reference Material: A reference sample of a known or certified value that is of the same or similar matrix as the associated field samples.
STLP	- Semi-dynamic Tank Leaching Procedure per EPA Method 1315.
TEF	- Toxic Equivalency Factors: The values assigned to each dioxin and furan to evaluate their toxicity relative to 2,3,7,8-TCDD.
TEQ	- Toxic Equivalent: The measure of a sample¿s toxicity derived by multiplying each dioxin and furan by its corresponding TEF and then summing the resulting values.
TIC	- Tentatively Identified Compound: A compound that has been identified to be present and is not part of the target compound list (TCL) for the method and/or program. All TICs are qualitatively identified and reported as estimated concentrations.

Footnotes

1	- The reference for this analyte should be considered modified since this analyte is absent from the target analyte list of the original method.

Terms

Analytical Method: Both the document from which the method originates and the analytical reference method. (Example: EPA 8260B is shown as 1,8260B.) The codes for the reference method documents are provided in the References section of the Addendum.

Final pH: As it pertains to Sample Receipt & Container Information section of the report, Final pH reflects pH of container determined after adjustment at the laboratory, if applicable. If no adjustment required, value reflects Initial pH.

Frozen Date/Time: With respect to Volatile Organics in soil, Frozen Date/Time reflects the date/time at which associated Reagent Water-preserved vials were initially frozen. Note: If frozen date/time is beyond 48 hours from sample collection, value will be reflected in 'bold'.

Initial pH: As it pertains to Sample Receipt & Container Information section of the report, Initial pH reflects pH of container determined upon receipt, if applicable.

Total: With respect to Organic analyses, a 'Total' result is defined as the summation of results for individual isomers or Aroclors. If a 'Total' result is requested, the results of its individual components will also be reported. This is applicable to 'Total' results for methods 8260, 8081 and 8082.

Report Format: Data Usability Report

Project Name:	6473-FULLER MIDDLE	**Lab Number:**	L1829113
Project Number:	6473	**Report Date:**	08/02/18

Data Qualifiers

A - Spectra identified as "Aldol Condensation Product".

B - The analyte was detected above the reporting limit in the associated method blank. Flag only applies to associated field samples that have detectable concentrations of the analyte at less than ten times (10x) the concentration found in the blank. For MCP-related projects, flag only applies to associated field samples that have detectable concentrations of the analyte at less than ten times (10x) the concentration found in the blank. For DOD-related projects, flag only applies to associated field samples that have detectable concentrations of the analyte at less than ten times (10x) the concentration found in the blank AND the analyte was detected above one-half the reporting limit (or above the reporting limit for common lab contaminants) in the associated method blank. For NJ-Air-related projects, flag only applies to associated field samples that have detectable concentrations of the analyte above the reporting limit. For NJ-related projects (excluding Air), flag only applies to associated field samples that have detectable concentrations of the analyte, which was detected above the reporting limit in the associated method blank or above five times the reporting limit for common lab contaminants (Phthalates, Acetone, Methylene Chloride, 2-Butanone).

C - Co-elution: The target analyte co-elutes with a known lab standard (i.e. surrogate, internal standards, etc.) for co-extracted analyses.

D - Concentration of analyte was quantified from diluted analysis. Flag only applies to field samples that have detectable concentrations of the analyte.

E - Concentration of analyte exceeds the range of the calibration curve and/or linear range of the instrument.

G - The concentration may be biased high due to matrix interferences (i.e, co-elution) with non-target compound(s). The result should be considered estimated.

H - The analysis of pH was performed beyond the regulatory-required holding time of 15 minutes from the time of sample collection.

I - The lower value for the two columns has been reported due to obvious interference.

M - Reporting Limit (RL) exceeds the MCP CAM Reporting Limit for this analyte.

NJ - Presumptive evidence of compound. This represents an estimated concentration for Tentatively Identified Compounds (TICs), where the identification is based on a mass spectral library search.

P - The RPD between the results for the two columns exceeds the method-specified criteria.

Q - The quality control sample exceeds the associated acceptance criteria. For DOD-related projects, LCS and/or Continuing Calibration Standard exceedences are also qualified on all associated sample results. Note: This flag is not applicable for matrix spike recoveries when the sample concentration is greater than 4x the spike added or for batch duplicate RPD when the sample concentrations are less than 5x the RL. (Metals only.)

R - Analytical results are from sample re-analysis.

RE - Analytical results are from sample re-extraction.

S - Analytical results are from modified screening analysis.

J - Estimated value. This represents an estimated concentration for Tentatively Identified Compounds (TICs).

ND - Not detected at the reporting limit (RL) for the sample.

Report Format: Data Usability Report

Project Name:	6473-FULLER MIDDLE	**Lab Number:**	L1829113
Project Number:	6473	**Report Date:**	08/02/18

REFERENCES

1 Test Methods for Evaluating Solid Waste: Physical/Chemical Methods. EPA SW-846. Third Edition. Updates I - IV, 2007.

97 EPA Test Methods (SW-846) with QC Requirements & Performance Standards for the Analysis of EPA SW-846 Methods under the Massachusetts Contingency Plan, WSC-CAM-IIA, IIB, IIIA, IIIB, IIIC, IIID, VA, VB, VC, VIA, VIB, VIIIA and VIIIB, July 2010.

121 Standard Methods for the Examination of Water and Wastewater. APHA-AWWA-WEF. Standard Methods Online.

125 Test Methods for Evaluating Solid Waste: Physical/Chemical Methods. EPA SW-846. Third Edition. Updates IIIA, April 1998.

LIMITATION OF LIABILITIES

Alpha Analytical performs services with reasonable care and diligence normal to the analytical testing laboratory industry. In the event of an error, the sole and exclusive responsibility of Alpha Analytical shall be to re-perform the work at it's own expense. In no event shall Alpha Analytical be held liable for any incidental, consequential or special damages, including but not limited to, damages in any way connected with the use of, interpretation of, information or analysis provided by Alpha Analytical.

We strongly urge our clients to comply with EPA protocol regarding sample volume, preservation, cooling, containers, sampling procedures, holding time and splitting of samples in the field.

Certification Information

The following analytes are not included in our Primary NELAP Scope of Accreditation:

Westborough Facility
EPA 624: m/p-xylene, o-xylene
EPA 8260C: NPW: 1,2,4,5-Tetramethylbenzene; 4-Ethyltoluene, Azobenzene; SCM: Iodomethane (methyl iodide), Methyl methacrylate, 1,2,4,5-Tetramethylbenzene; 4-Ethyltoluene.
EPA 8270D: NPW: Dimethylnaphthalene,1,4-Diphenylhydrazine; SCM: Dimethylnaphthalene,1,4-Diphenylhydrazine.
EPA 300: DW: Bromide
EPA 6860: SCM: Perchlorate
EPA 9010: NPW and SCM: Amenable Cyanide Distillation
SM4500: NPW: Amenable Cyanide, Dissolved Oxygen; SCM: Total Phosphorus, TKN, NO2, NO3.

Mansfield Facility
SM 2540D: TSS
EPA 8082A: NPW: PCB: 1, 5, 31, 87,101, 110, 141, 151, 153, 180, 183, 187.
EPA TO-15: Halothane, 2,4,4-Trimethyl-2-pentene, 2,4,4-Trimethyl-1-pentene, Thiophene, 2-Methylthiophene, 3-Methylthiophene, 2-Ethylthiophene, 1,2,3-Trimethylbenzene, Indan, Indene, 1,2,4,5-Tetramethylbenzene, Benzothiophene, 1-Methylnaphthalene.
Biological Tissue Matrix: EPA 3050B

The following analytes are included in our Massachusetts DEP Scope of Accreditation

Westborough Facility:

Drinking Water
EPA 300.0: Chloride, Nitrate-N, Fluoride, Sulfate; **EPA 353.2**: Nitrate-N, Nitrite-N; **SM4500NO3-F**: Nitrate-N, Nitrite-N; **SM4500F-C, SM4500CN-CE, EPA 180.1, SM2130B, SM4500Cl-D, SM2320B, SM2540C, SM4500H-B**
EPA 332: Perchlorate; **EPA 524.2:** THMs and VOCs; **EPA 504.1:** EDB, DBCP.
Microbiology: **SM9215B; SM9223-P/A, SM9223B-Colilert-QT,SM9222D**.

Non-Potable Water
SM4500H,B, EPA 120.1, SM2510B, SM2540C, SM2320B, SM4500CL-E, SM4500F-BC, SM4500NH3-BH: Ammonia-N and Kjeldahl-N, **EPA 350.1**: Ammonia-N, **LACHAT 10-107-06-1-B**: Ammonia-N, **EPA 351.1, SM4500NO3-F, EPA 353.2**: Nitrate-N**, EPA 351.1, SM4500P-E, SM4500P-B, E, SM4500SO4-E, SM5220D, EPA 410.4, SM5210B, SM5310C, SM4500CL-D, EPA 1664, EPA 420.1, SM4500-CN-CE, SM2540D.**
EPA 624: Volatile Halocarbons & Aromatics,
EPA 608: Chlordane, Toxaphene, Aldrin, alpha-BHC, beta-BHC, gamma-BHC, delta-BHC, Dieldrin, DDD, DDE, DDT, Endosulfan I, Endosulfan II, Endosulfan sulfate, Endrin, Endrin Aldehyde, Heptachlor, Heptachlor Epoxide, PCBs
EPA 625: SVOC (Acid/Base/Neutral Extractables), **EPA 600/4-81-045**: PCB-Oil.
Microbiology: **SM9223B-Colilert-QT; Enterolert-QT, SM9221E, SM9222D.**

Mansfield Facility:

Drinking Water
EPA 200.7: Al, Ba, Be, Cd, Cr, Cu, Mn, Ni, Na, Ag, Ca, Zn. **EPA 200.8:** Al, Sb, As, Ba, Be, Cd, Cr, Cu, Pb, Mn, Ni, Se, Ag, TL, Zn. **EPA 245.1** Hg.
EPA 522.

Non-Potable Water
EPA 200.7: Al, Sb, As, Be, Cd, Ca, Cr, Co, Cu, Fe, Pb, Mg, Mn, Mo, Ni, K, Se, Ag, Na, Sr, TL, Ti, V, Zn.
EPA 200.8: Al, Sb, As, Be, Cd, Cr, Cu, Pb, Mn, Ni, Se, Ag, TL, Zn.
EPA 245.1 Hg.
SM2340B

For a complete listing of analytes and methods, please contact your Alpha Project Manager.

CHAIN OF CUSTODY

PAGE 1 OF 1

Date Rec'd in Lab: 7/27/18

ALPHA Job #: L1829113

ALPHA ANALYTICAL
8 Walkup Drive
Westboro, MA 01581
Tel: 508-898-9220

320 Forbes Blvd
Mansfield, MA 02048
Tel: 508-822-9300

Client Information

Client: McPhail Associates
Address: 2269 Mass Ave
Cambridge, MA 02140
Phone: 617-868-1420
Email: jg@mcphailgeo.com

Additional Project Information:

Project Information

Project Name: 6473-Fuller Middle
Project Location: Framingham, MA
Project #: 6473
Project Manager: Joe Lombardo
ALPHA Quote #:

Turn-Around Time

☑ Standard ☐ RUSH (only confirmed if pre-approved)

Date Due:

Report Information - Data Deliverables

☑ ADEx ☑ EMAIL

Billing Information

☐ Same as Client info PO #:

Regulatory Requirements & Project Information Requirements

☑ Yes ☐ No MA MCP Analytical Methods ☐ Yes ☑ No CT RCP Analytical Methods
☐ Yes ☑ No Matrix Spike Required on this SDG? (Required for MCP Inorganics)
☐ Yes ☑ No GW1 Standards (Info Required for Metals & EPH with Targets)
☐ Yes ☑ No NPDES RGP
☐ Other State /Fed Program _____ Criteria _____

ANALYSIS: VOC: ☐ 8260 ☐ 624 ☐ 524.2; SVOC: ☐ ABN ☐ PAH; METALS: ☐ MCP 13 ☐ MCP 14 ☐ RCP 15; METALS: ☐ RCRA5 ☐ RCRA8 ☐ PP13; EPH: ☐ Ranges & Targets ☐ Ranges Only; VPH: ☐ Ranges & Targets ☐ Ranges Only; ☐ PCB ☐ PEST; TPH: ☐ Quant Only ☐ Fingerprint

Package #4

SAMPLE INFO
Filtration
☐ Field
☐ Lab to do
Preservation
☐ Lab to do

ALPHA Lab ID (Lab Use Only)	Sample ID	Collection Date	Collection Time	Sample Matrix	Sampler Initials	Package #4	Sample Comments	TOTAL # BOTTLES
29113 -01	B-202 S-3 4-5'	7/27/17	8:20	S	JC	✓		3
-02	B-202 0.5-5 Fill		8:20			✓		2
-03	B-207 S-2 ~~2-4~~ 6		12:00			✓		3
-04	B-207 .4-7.5 Fill		12:00			✓		2
-05	B-206 S-2 2-4		10:15			✓		3
-06	B-206 0.5-4 Fill		10:15			✓		2
-07	B-208 S-2 2-4		1:10			✓		3
-08	B-208 0.6-4 fill		1:10			✓		2

Container Type	AP
Preservative	NF

Container Type
P= Plastic
A= Amber glass
V= Vial
G= Glass
B= Bacteria cup
C= Cube
O= Other
E= Encore
D= BOD Bottle

Preservative
A= None
B= HCl
C= HNO_3
D= H_2SO_4
E= NaOH
F= MeOH
G= $NaHSO_4$
H = $Na_2S_2O_3$
I= Ascorbic Acid
J = NH_4Cl
K= Zn Acetate
O= Other

Relinquished By:	Date/Time	Received By:	Date/Time
[signature]	7/27/18	[signature]	7/27/18 1417
[signature]	7/27/18 1454	Chris Gelbeau	7/27/18 1454

All samples submitted are subject to Alpha's Terms and Conditions. See reverse side.

FORM NO: 01-01 (rev. 12-Mar-2012)

Method Blank Summary
Form 4
VOLATILES

Client	: McPhail Associates	**Lab Number**	: L1829113
Project Name	: 6473-FULLER MIDDLE	**Project Number**	: 6473
Lab Sample ID	: WG1141608-5	**Lab File ID**	: V10180731N05
Instrument ID	: VOA110		
Matrix	: SOIL	**Analysis Date**	: 07/31/18 22:11

Client Sample No.	Lab Sample ID	Analysis Date
WG1141608-3LCS	WG1141608-3	07/31/18 20:26
WG1141608-4LCSD	WG1141608-4	07/31/18 20:52
B-202, S-3 4-5'	L1829113-01	08/01/18 02:58
B-207, S-2 2-4	L1829113-03	08/01/18 03:24
B-206, S-2 2-4	L1829113-05	08/01/18 03:50
B-208, S-2 2-4	L1829113-07	08/01/18 04:16

Continuing Calibration
Form 7

Client	: McPhail Associates	Lab Number	: L1829113
Project Name	: 6473-FULLER MIDDLE	Project Number	: 6473
Instrument ID	: VOA110	Calibration Date	: 07/31/18 20:26
Lab File ID	: V10180731N01	Init. Calib. Date(s)	: 06/06/18 06/07/18
Sample No	: WG1141608-2	Init. Calib. Times	: 16:59 12:05
Channel	:		

Compound	Ave. RRF	RRF	Min RRF	%D	Max %D	Area%	Dev(min)
Fluorobenzene	1	1	-	0	20	92	0
Dichlorodifluoromethane	0.216	0.217	-	-0.5	20	103	0
Chloromethane	0.206	0.248	-	-20.4*	20	116	0
Vinyl chloride	0.213	0.248	-	-16.4	20	116	0
Bromomethane	0.197	0.159	-	19.3	20	89	0
Chloroethane	0.165	0.18	-	-9.1	20	111	.03
Trichlorofluoromethane	0.479	0.408	-	14.8	20	88	.02
Ethyl ether	0.12	0.121	-	-0.8	20	94	0
1,1-Dichloroethene	0.189	0.176	-	6.9	20	95	0
Carbon disulfide	0.547	0.553	-	-1.1	20	101	0
Freon-113	0.207	0.202	-	2.4	20	101	0
Acrolein	0.027	0.034*	-	-25.9*	20	112	0
Methylene chloride	0.228	0.229	-	-0.4	20	98	0
Acetone	20	29.418	-	-47.1*	20	138	0
trans-1,2-Dichloroethene	0.216	0.206	-	4.6	20	91	0
Methyl acetate	0.114	0.131	-	-14.9	20	105	0
Methyl tert-butyl ether	0.572	0.531	-	7.2	20	86	0
tert-Butyl alcohol	0.018	0.02*	-	-11.1	20	103	0
Diisopropyl ether	0.646	0.742	-	-14.9	20	108	0
1,1-Dichloroethane	0.362	0.389	-	-7.5	20	102	0
Halothane	0.187	0.168	-	10.2	20	88	0
Acrylonitrile	0.049	0.055	-	-12.2	20	113	.02
Ethyl tert-butyl ether	0.573	0.602	-	-5.1	20	99	0
Vinyl acetate	0.457	0.498	-	-9	20	103	0
cis-1,2-Dichloroethene	0.243	0.227	-	6.6	20	88	0
2,2-Dichloropropane	0.306	0.297	-	2.9	20	94	0
Bromochloromethane	0.135	0.118	-	12.6	20	79	0
Cyclohexane	0.298	0.349	-	-17.1	20	120	0
Chloroform	0.407	0.394	-	3.2	20	93	0
Ethyl acetate	0.178	0.199	-	-11.8	20	103	0
Carbon tetrachloride	0.36	0.334	-	7.2	20	91	0
Tetrahydrofuran	0.056	0.078	-	-39.3*	20	122	0
Dibromofluoromethane	0.297	0.278	-	6.4	20	89	0
1,1,1-Trichloroethane	0.368	0.357	-	3	20	96	0
2-Butanone	0.075	0.084*	-	-12	20	105	.01
1,1-Dichloropropene	0.272	0.265	-	2.6	20	93	0
Benzene	0.841	0.825	-	1.9	20	96	0
tert-Amyl methyl ether	0.581	0.527	-	9.3	20	84	0
1,2-Dichloroethane-d4	0.26	0.29	-	-11.5	20	104	0
1,2-Dichloroethane	0.277	0.305	-	-10.1	20	103	0
Methyl cyclohexane	0.358	0.346	-	3.4	20	98	0
Trichloroethene	0.239	0.218	-	8.8	20	92	0
Dibromomethane	0.143	0.132	-	7.7	20	83	0
1,2-Dichloropropane	0.197	0.207	-	-5.1	20	96	0
2-Chloroethyl vinyl ether	0.105	0.086	-	18.1	20	72	0

* Value outside of QC limits.

Continuing Calibration
Form 7

Client	: McPhail Associates	Lab Number	: L1829113
Project Name	: 6473-FULLER MIDDLE	Project Number	: 6473
Instrument ID	: VOA110	Calibration Date	: 07/31/18 20:26
Lab File ID	: V10180731N01	Init. Calib. Date(s)	: 06/06/18 06/07/18
Sample No	: WG1141608-2	Init. Calib. Times	: 16:59 12:05
Channel	:		

Compound	Ave. RRF	RRF	Min RRF	%D	Max %D	Area%	Dev(min)
Bromodichloromethane	0.311	0.309	-	0.6	20	94	0
1,4-Dioxane	1000	860.571	-	13.9	20	73	0
cis-1,3-Dichloropropene	0.315	0.321	-	-1.9	20	92	0
Chlorobenzene-d5	1	1	-	0	20	90	0
Toluene-d8	1.27	1.288	-	-1.4	20	92	0
Toluene	0.673	0.656	-	2.5	20	90	0
4-Methyl-2-pentanone	0.07	0.081*	-	-15.7	20	102	0
Tetrachloroethene	0.345	0.305	-	11.6	20	89	0
trans-1,3-Dichloropropene	0.342	0.369	-	-7.9	20	99	0
Ethyl methacrylate	20	17.17	-	14.1	20	88	0
1,1,2-Trichloroethane	0.192	0.194	-	-1	20	89	0
Chlorodibromomethane	0.34	0.309	-	9.1	20	84	0
1,3-Dichloropropane	0.368	0.384	-	-4.3	20	90	0
1,2-Dibromoethane	0.244	0.23	-	5.7	20	82	0
2-Hexanone	0.144	0.141	-	2.1	20	93	0
Chlorobenzene	0.85	0.755	-	11.2	20	82	0
Ethylbenzene	1.277	1.253	-	1.9	20	91	0
1,1,1,2-Tetrachloroethane	0.333	0.294	-	11.7	20	80	0
p/m Xylene	0.516	0.493	-	4.5	20	87	0
o Xylene	0.516	0.483	-	6.4	20	84	0
Styrene	0.831	0.775	-	6.7	20	84	0
1,4-Dichlorobenzene-d4	1	1	-	0	20	93	0
Bromoform	0.372	0.348	-	6.5	20	87	0
Isopropylbenzene	2.332	2.178	-	6.6	20	87	0
4-Bromofluorobenzene	0.774	0.851	-	-9.9	20	101	0
Bromobenzene	0.683	0.581	-	14.9	20	79	0
n-Propylbenzene	2.707	2.656	-	1.9	20	92	0
1,4-Dichlorobutane	0.596	0.713	-	-19.6	20	109	0
1,1,2,2-Tetrachloroethane	0.541	0.546	-	-0.9	20	90	0
4-Ethyltoluene	2.429	2.302	-	5.2	20	87	0
2-Chlorotoluene	1.598	1.565	-	2.1	20	92	0
1,3,5-Trimethylbenzene	1.996	1.941	-	2.8	20	89	0
1,2,3-Trichloropropane	0.4	0.421	-	-5.2	20	94	0
trans-1,4-Dichloro-2-buten	0.119	0.142	-	-19.3	20	106	0
4-Chlorotoluene	1.63	1.609	-	1.3	20	91	0
tert-Butylbenzene	1.83	1.623	-	11.3	20	81	0
1,2,4-Trimethylbenzene	1.977	1.927	-	2.5	20	89	0
sec-Butylbenzene	2.556	2.517	-	1.5	20	92	0
p-Isopropyltoluene	2.35	2.084	-	11.3	20	82	0
1,3-Dichlorobenzene	1.332	1.151	-	13.6	20	80	0
1,4-Dichlorobenzene	1.383	1.155	-	16.5	20	79	0
p-Diethylbenzene	1.488	1.252	-	15.9	20	79	0
n-Butylbenzene	1.969	1.985	-	-0.8	20	94	0
1,2-Dichlorobenzene	1.248	1.059	-	15.1	20	77	0
1,2,4,5-Tetramethylbenzene	2.305	1.955	-	15.2	20	77	0

* Value outside of QC limits.

Continuing Calibration
Form 7

Client	: McPhail Associates	Lab Number	: L1829113
Project Name	: 6473-FULLER MIDDLE	Project Number	: 6473
Instrument ID	: VOA110	Calibration Date	: 07/31/18 20:26
Lab File ID	: V10180731N01	Init. Calib. Date(s)	: 06/06/18 06/07/18
Sample No	: WG1141608-2	Init. Calib. Times	: 16:59 12:05
Channel	:		

Compound	Ave. RRF	RRF	Min RRF	%D	Max %D	Area%	Dev(min)
1,2-Dibromo-3-chloropropan	0.095	0.078	-	17.9	20	76	0
1,3,5-Trichlorobenzene	1.025	0.871	-	15	20	80	0
Hexachlorobutadiene	0.417	0.408	-	2.2	20	95	0
1,2,4-Trichlorobenzene	0.861	0.738	-	14.3	20	79	0
Naphthalene	1.87	1.548	-	17.2	20	73	0
1,2,3-Trichlorobenzene	0.797	0.711	-	10.8	20	82	0

* Value outside of QC limits.

ANALYTICAL REPORT

Lab Number:	L1828859
Client:	McPhail Associates 2269 Massachusetts Avenue Cambridge, MA 02140
ATTN:	Ambrose Donovan
Phone:	(617) 868-1420
Project Name:	6473 FULLER MIDDLE
Project Number:	6473
Report Date:	08/01/18

The original project report/data package is held by Alpha Analytical. This report/data package is paginated and should be reproduced only in its entirety. Alpha Analytical holds no responsibility for results and/or data that are not consistent with the original.

Certifications & Approvals: MA (M-MA086), NH NELAP (2064), CT (PH-0574), IL (200077), ME (MA00086), MD (348), NJ (MA935), NY (11148), NC (25700/666), PA (68-03671), RI (LAO00065), TX (T104704476), VT (VT-0935), VA (460195), USDA (Permit #P330-17-00196).

Eight Walkup Drive, Westborough, MA 01581-1019
508-898-9220 (Fax) 508-898-9193 800-624-9220 - www.alphalab.com

Project Name: 6473 FULLER MIDDLE
Project Number: 6473

Lab Number: L1828859
Report Date: 08/01/18

Alpha Sample ID	Client ID	Matrix	Sample Location	Collection Date/Time	Receive Date
L1828859-01	B-205, S-2 2-4	FILL	FRAMINGHAM, MA	07/26/18 10:15	07/26/18
L1828859-02	B-205 0-4.5 FILL	FILL	FRAMINGHAM, MA	07/26/18 10:15	07/26/18
L1828859-03	B-204, S-2 2.4'	FILL	FRAMINGHAM, MA	07/26/18 08:00	07/26/18
L1828859-04	B-204 0-4 FILL	FILL	FRAMINGHAM, MA	07/26/18 08:00	07/26/18
L1828859-05	B-201, S-1 0.5-2'	FILL	FRAMINGHAM, MA	07/26/18 12:00	07/26/18
L1828859-06	B-201 0.5-5 FILL	FILL	FRAMINGHAM, MA	07/26/18 12:00	07/26/18
L1828859-07	B-203, S-2 2-3.5	FILL	FRAMINGHAM, MA	07/26/18 14:15	07/26/18
L1828859-08	B-203 0.4-3.5 FILL	FILL	FRAMINGHAM, MA	07/26/18 14:15	07/26/18

Project Name: 6473 FULLER MIDDLE **Lab Number:** L1828859

Project Number: 6473 **Report Date:** 08/01/18

MADEP MCP Response Action Analytical Report Certification

This form provides certifications for all samples performed by MCP methods. Please refer to the Sample Results and Container Information sections of this report for specification of MCP methods used for each analysis. The following questions pertain only to MCP Analytical Methods.

An affirmative response to questions A through F is required for "Presumptive Certainty" status		
A	Were all samples received in a condition consistent with those described on the Chain-of-Custody, properly preserved (including temperature) in the field or laboratory, and prepared/analyzed within method holding times?	YES
B	Were the analytical method(s) and all associated QC requirements specified in the selected CAM protocol(s) followed?	YES
C	Were all required corrective actions and analytical response actions specified in the selected CAM protocol(s) implemented for all identified performance standard non-conformances?	YES
D	Does the laboratory report comply with all the reporting requirements specified in CAM VII A, "Quality Assurance and Quality Control Guidelines for the Acquisition and Reporting of Analytical Data?"	YES
E a.	VPH, EPH, and APH Methods only: Was each method conducted without significant modification(s)? (Refer to the individual method(s) for a list of significant modifications).	N/A
E b.	APH and TO-15 Methods only: Was the complete analyte list reported for each method?	N/A
F	Were all applicable CAM protocol QC and performance standard non-conformances identified and evaluated in a laboratory narrative (including all "No" responses to Questions A through E)?	YES

A response to questions G, H and I is required for "Presumptive Certainty" status		
G	Were the reporting limits at or below all CAM reporting limits specified in the selected CAM protocol(s)?	YES
H	Were all QC performance standards specified in the CAM protocol(s) achieved?	NO
I	Were results reported for the complete analyte list specified in the selected CAM protocol(s)?	NO

For any questions answered "No", please refer to the case narrative section on the following page(s).

Please note that sample matrix information is located in the Sample Results section of this report.

Project Name: 6473 FULLER MIDDLE **Lab Number:** L1828859
Project Number: 6473 **Report Date:** 08/01/18

Case Narrative

The samples were received in accordance with the Chain of Custody and no significant deviations were encountered during the preparation or analysis unless otherwise noted. Sample Receipt, Container Information, and the Chain of Custody are located at the back of the report.

Results contained within this report relate only to the samples submitted under this Alpha Lab Number and meet NELAP requirements for all NELAP accredited parameters unless otherwise noted in the following narrative. The data presented in this report is organized by parameter (i.e. VOC, SVOC, etc.). Sample specific Quality Control data (i.e. Surrogate Spike Recovery) is reported at the end of the target analyte list for each individual sample, followed by the Laboratory Batch Quality Control at the end of each parameter. Tentatively Identified Compounds (TICs), if requested, are reported for compounds identified to be present and are not part of the method/program Target Compound List, even if only a subset of the TCL are being reported. If a sample was re-analyzed or re-extracted due to a required quality control corrective action and if both sets of data are reported, the Laboratory ID of the re-analysis or re-extraction is designated with an "R" or "RE", respectively. When multiple Batch Quality Control elements are reported (e.g. more than one LCS), the associated samples for each element are noted in the grey shaded header line of each data table. Any Laboratory Batch, Sample Specific % recovery or RPD value that is outside the listed Acceptance Criteria is bolded in the report. All specific QC information is also incorporated in the Data Usability format of our Data Merger tool where it can be reviewed along with any associated usability implications. Soil/sediments, solids and tissues are reported on a dry weight basis unless otherwise noted. Definitions of all data qualifiers and acronyms used in this report are provided in the Glossary located at the back of the report.

In reference to questions H (CAM) or 4 (RCP) when "NO" is checked, the performance criteria for CAM and RCP methods allow for some quality control failures to occur and still be within method compliance. In these instances the specific failure is not narrated but noted in the associated QC table. The information is also incorporated in the Data Usability format of our Data Merger tool where it can be reviewed along with any associated usability implications.

Please see the associated ADEx data file for a comparison of laboratory reporting limits that were achieved with the regulatory Numerical Standards requested on the Chain of Custody.

HOLD POLICY
For samples submitted on hold, Alpha's policy is to hold samples (with the exception of Air canisters) free of charge for 21 calendar days from the date the project is completed. After 21 calendar days, we will dispose of all samples submitted including those put on hold unless you have contacted your Client Service Representative and made arrangements for Alpha to continue to hold the samples. Air canisters will be disposed after 3 business days from the date the project is completed.

Please contact Client Services at 800-624-9220 with any questions.

Project Name: 6473 FULLER MIDDLE **Lab Number:** L1828859
Project Number: 6473 **Report Date:** 08/01/18

Case Narrative (continued)

MCP Related Narratives

Sample Receipt

In reference to question H:

A Matrix Spike was not submitted for the analysis of Total Metals.

Sample Receipt

L1828859-07, -08: The collection date and time on the chain of custody was 26-JUL-18 13:15; however, the collection date/time on the container label was 26-JUL-18 14:15. At the client's request, the collection date/time is reported as 26-JUL-18 14:15.

Volatile Organics

In reference to question H:

The initial calibration, associated with L1828859-01,-03,-05, and -07, did not meet the method required minimum response factor on the lowest calibration standard for 1,4-dioxane (0.0037), as well as the average response factor for 1,4-dioxane.

The continuing calibration standard, associated with L1828859-01,-03,-05, and -07, is outside the acceptance criteria for several compounds; however, it is within overall method allowances. A copy of the continuing calibration standard is included as an addendum to this report.

Metals

In reference to question I:

All samples were analyzed for a subset of MCP analytes per client request.

I, the undersigned, attest under the pains and penalties of perjury that, to the best of my knowledge and belief and based upon my personal inquiry of those responsible for providing the information contained in this analytical report, such information is accurate and complete. This certificate of analysis is not complete unless this page accompanies any and all pages of this report.

Authorized Signature: Lisa Westerlind

Title: Technical Director/Representative Date: 08/01/18

ORGANICS

VOLATILES

Project Name: 6473 FULLER MIDDLE
Project Number: 6473
Lab Number: L1828859
Report Date: 08/01/18

SAMPLE RESULTS

Lab ID: L1828859-01
Client ID: B-205, S-2 2-4
Sample Location: FRAMINGHAM, MA

Date Collected: 07/26/18 10:15
Date Received: 07/26/18
Field Prep: Not Specified

Sample Depth: 2-4
Matrix: Fill
Analytical Method: 97,8260C
Analytical Date: 07/31/18 20:48
Analyst: MV
Percent Solids: 86%

Parameter	Result	Qualifier	Units	RL	MDL	Dilution Factor
MCP Volatile Organics by 8260/5035 - Westborough Lab						
Methylene chloride	ND		ug/kg	5.1	--	1
1,1-Dichloroethane	ND		ug/kg	1.0	--	1
Chloroform	ND		ug/kg	1.5	--	1
Carbon tetrachloride	ND		ug/kg	1.0	--	1
1,2-Dichloropropane	ND		ug/kg	1.0	--	1
Dibromochloromethane	ND		ug/kg	1.0	--	1
1,1,2-Trichloroethane	ND		ug/kg	1.0	--	1
Tetrachloroethene	ND		ug/kg	0.51	--	1
Chlorobenzene	ND		ug/kg	0.51	--	1
Trichlorofluoromethane	ND		ug/kg	4.0	--	1
1,2-Dichloroethane	ND		ug/kg	1.0	--	1
1,1,1-Trichloroethane	ND		ug/kg	0.51	--	1
Bromodichloromethane	ND		ug/kg	0.51	--	1
trans-1,3-Dichloropropene	ND		ug/kg	1.0	--	1
cis-1,3-Dichloropropene	ND		ug/kg	0.51	--	1
1,3-Dichloropropene, Total	ND		ug/kg	0.51	--	1
1,1-Dichloropropene	ND		ug/kg	0.51	--	1
Bromoform	ND		ug/kg	4.0	--	1
1,1,2,2-Tetrachloroethane	ND		ug/kg	0.51	--	1
Benzene	ND		ug/kg	0.51	--	1
Toluene	ND		ug/kg	1.0	--	1
Ethylbenzene	ND		ug/kg	1.0	--	1
Chloromethane	ND		ug/kg	4.0	--	1
Bromomethane	ND		ug/kg	2.0	--	1
Vinyl chloride	ND		ug/kg	1.0	--	1
Chloroethane	ND		ug/kg	2.0	--	1
1,1-Dichloroethene	ND		ug/kg	1.0	--	1
trans-1,2-Dichloroethene	ND		ug/kg	1.5	--	1

Project Name: 6473 FULLER MIDDLE **Lab Number:** L1828859

Project Number: 6473 **Report Date:** 08/01/18

SAMPLE RESULTS

Lab ID: L1828859-01 Date Collected: 07/26/18 10:15

Client ID: B-205, S-2 2-4 Date Received: 07/26/18

Sample Location: FRAMINGHAM, MA Field Prep: Not Specified

Sample Depth: 2-4

Parameter	Result	Qualifier	Units	RL	MDL	Dilution Factor
MCP Volatile Organics by 8260/5035 - Westborough Lab						
Trichloroethene	ND		ug/kg	0.51	--	1
1,2-Dichlorobenzene	ND		ug/kg	2.0	--	1
1,3-Dichlorobenzene	ND		ug/kg	2.0	--	1
1,4-Dichlorobenzene	ND		ug/kg	2.0	--	1
Methyl tert butyl ether	ND		ug/kg	2.0	--	1
p/m-Xylene	ND		ug/kg	2.0	--	1
o-Xylene	ND		ug/kg	1.0	--	1
Xylenes, Total	ND		ug/kg	1.0	--	1
cis-1,2-Dichloroethene	ND		ug/kg	1.0	--	1
1,2-Dichloroethene, Total	ND		ug/kg	1.0	--	1
Dibromomethane	ND		ug/kg	2.0	--	1
1,2,3-Trichloropropane	ND		ug/kg	2.0	--	1
Styrene	ND		ug/kg	1.0	--	1
Dichlorodifluoromethane	ND		ug/kg	10	--	1
Acetone	56		ug/kg	10	--	1
Carbon disulfide	ND		ug/kg	10	--	1
Methyl ethyl ketone	25		ug/kg	10	--	1
Methyl isobutyl ketone	ND		ug/kg	10	--	1
2-Hexanone	ND		ug/kg	10	--	1
Bromochloromethane	ND		ug/kg	2.0	--	1
Tetrahydrofuran	ND		ug/kg	4.0	--	1
2,2-Dichloropropane	ND		ug/kg	2.0	--	1
1,2-Dibromoethane	ND		ug/kg	1.0	--	1
1,3-Dichloropropane	ND		ug/kg	2.0	--	1
1,1,1,2-Tetrachloroethane	ND		ug/kg	0.51	--	1
Bromobenzene	ND		ug/kg	2.0	--	1
n-Butylbenzene	ND		ug/kg	1.0	--	1
sec-Butylbenzene	ND		ug/kg	1.0	--	1
tert-Butylbenzene	ND		ug/kg	2.0	--	1
o-Chlorotoluene	ND		ug/kg	2.0	--	1
p-Chlorotoluene	ND		ug/kg	2.0	--	1
1,2-Dibromo-3-chloropropane	ND		ug/kg	3.0	--	1
Hexachlorobutadiene	ND		ug/kg	4.0	--	1
Isopropylbenzene	ND		ug/kg	1.0	--	1
p-Isopropyltoluene	ND		ug/kg	1.0	--	1
Naphthalene	ND		ug/kg	4.0	--	1
n-Propylbenzene	ND		ug/kg	1.0	--	1

Project Name: 6473 FULLER MIDDLE **Lab Number:** L1828859

Project Number: 6473 **Report Date:** 08/01/18

SAMPLE RESULTS

Lab ID: L1828859-01 Date Collected: 07/26/18 10:15

Client ID: B-205, S-2 2-4 Date Received: 07/26/18

Sample Location: FRAMINGHAM, MA Field Prep: Not Specified

Sample Depth: 2-4

Parameter	Result	Qualifier	Units	RL	MDL	Dilution Factor
MCP Volatile Organics by 8260/5035 - Westborough Lab						
1,2,3-Trichlorobenzene	ND		ug/kg	2.0	--	1
1,2,4-Trichlorobenzene	ND		ug/kg	2.0	--	1
1,3,5-Trimethylbenzene	ND		ug/kg	2.0	--	1
1,2,4-Trimethylbenzene	ND		ug/kg	2.0	--	1
Diethyl ether	ND		ug/kg	2.0	--	1
Diisopropyl Ether	ND		ug/kg	2.0	--	1
Ethyl-Tert-Butyl-Ether	ND		ug/kg	2.0	--	1
Tertiary-Amyl Methyl Ether	ND		ug/kg	2.0	--	1
1,4-Dioxane	ND		ug/kg	100	--	1

Surrogate	% Recovery	Qualifier	Acceptance Criteria
1,2-Dichloroethane-d4	95		70-130
Toluene-d8	104		70-130
4-Bromofluorobenzene	121		70-130
Dibromofluoromethane	92		70-130

Project Name: 6473 FULLER MIDDLE **Lab Number:** L1828859

Project Number: 6473 **Report Date:** 08/01/18

SAMPLE RESULTS

Lab ID: L1828859-03
Client ID: B-204, S-2 2.4'
Sample Location: FRAMINGHAM, MA

Date Collected: 07/26/18 08:00
Date Received: 07/26/18
Field Prep: Not Specified

Sample Depth: 2-4
Matrix: Fill
Analytical Method: 97,8260C
Analytical Date: 07/31/18 21:13
Analyst: MV
Percent Solids: 87%

Parameter	Result	Qualifier	Units	RL	MDL	Dilution Factor
MCP Volatile Organics by 8260/5035 - Westborough Lab						
Methylene chloride	ND		ug/kg	3.9	--	1
1,1-Dichloroethane	ND		ug/kg	0.78	--	1
Chloroform	ND		ug/kg	1.2	--	1
Carbon tetrachloride	ND		ug/kg	0.78	--	1
1,2-Dichloropropane	ND		ug/kg	0.78	--	1
Dibromochloromethane	ND		ug/kg	0.78	--	1
1,1,2-Trichloroethane	ND		ug/kg	0.78	--	1
Tetrachloroethene	ND		ug/kg	0.39	--	1
Chlorobenzene	ND		ug/kg	0.39	--	1
Trichlorofluoromethane	ND		ug/kg	3.1	--	1
1,2-Dichloroethane	ND		ug/kg	0.78	--	1
1,1,1-Trichloroethane	ND		ug/kg	0.39	--	1
Bromodichloromethane	ND		ug/kg	0.39	--	1
trans-1,3-Dichloropropene	ND		ug/kg	0.78	--	1
cis-1,3-Dichloropropene	ND		ug/kg	0.39	--	1
1,3-Dichloropropene, Total	ND		ug/kg	0.39	--	1
1,1-Dichloropropene	ND		ug/kg	0.39	--	1
Bromoform	ND		ug/kg	3.1	--	1
1,1,2,2-Tetrachloroethane	ND		ug/kg	0.39	--	1
Benzene	ND		ug/kg	0.39	--	1
Toluene	ND		ug/kg	0.78	--	1
Ethylbenzene	ND		ug/kg	0.78	--	1
Chloromethane	ND		ug/kg	3.1	--	1
Bromomethane	ND		ug/kg	1.6	--	1
Vinyl chloride	ND		ug/kg	0.78	--	1
Chloroethane	ND		ug/kg	1.6	--	1
1,1-Dichloroethene	ND		ug/kg	0.78	--	1
trans-1,2-Dichloroethene	ND		ug/kg	1.2	--	1

Project Name: 6473 FULLER MIDDLE **Lab Number:** L1828859

Project Number: 6473 **Report Date:** 08/01/18

SAMPLE RESULTS

Lab ID: L1828859-03 Date Collected: 07/26/18 08:00

Client ID: B-204, S-2 2.4' Date Received: 07/26/18

Sample Location: FRAMINGHAM, MA Field Prep: Not Specified

Sample Depth: 2-4

Parameter	Result	Qualifier	Units	RL	MDL	Dilution Factor
MCP Volatile Organics by 8260/5035 - Westborough Lab						
Trichloroethene	ND		ug/kg	0.39	--	1
1,2-Dichlorobenzene	ND		ug/kg	1.6	--	1
1,3-Dichlorobenzene	ND		ug/kg	1.6	--	1
1,4-Dichlorobenzene	ND		ug/kg	1.6	--	1
Methyl tert butyl ether	ND		ug/kg	1.6	--	1
p/m-Xylene	ND		ug/kg	1.6	--	1
o-Xylene	ND		ug/kg	0.78	--	1
Xylenes, Total	ND		ug/kg	0.78	--	1
cis-1,2-Dichloroethene	ND		ug/kg	0.78	--	1
1,2-Dichloroethene, Total	ND		ug/kg	0.78	--	1
Dibromomethane	ND		ug/kg	1.6	--	1
1,2,3-Trichloropropane	ND		ug/kg	1.6	--	1
Styrene	ND		ug/kg	0.78	--	1
Dichlorodifluoromethane	ND		ug/kg	7.8	--	1
Acetone	21		ug/kg	7.8	--	1
Carbon disulfide	ND		ug/kg	7.8	--	1
Methyl ethyl ketone	22		ug/kg	7.8	--	1
Methyl isobutyl ketone	ND		ug/kg	7.8	--	1
2-Hexanone	ND		ug/kg	7.8	--	1
Bromochloromethane	ND		ug/kg	1.6	--	1
Tetrahydrofuran	ND		ug/kg	3.1	--	1
2,2-Dichloropropane	ND		ug/kg	1.6	--	1
1,2-Dibromoethane	ND		ug/kg	0.78	--	1
1,3-Dichloropropane	ND		ug/kg	1.6	--	1
1,1,1,2-Tetrachloroethane	ND		ug/kg	0.39	--	1
Bromobenzene	ND		ug/kg	1.6	--	1
n-Butylbenzene	ND		ug/kg	0.78	--	1
sec-Butylbenzene	ND		ug/kg	0.78	--	1
tert-Butylbenzene	ND		ug/kg	1.6	--	1
o-Chlorotoluene	ND		ug/kg	1.6	--	1
p-Chlorotoluene	ND		ug/kg	1.6	--	1
1,2-Dibromo-3-chloropropane	ND		ug/kg	2.3	--	1
Hexachlorobutadiene	ND		ug/kg	3.1	--	1
Isopropylbenzene	ND		ug/kg	0.78	--	1
p-Isopropyltoluene	ND		ug/kg	0.78	--	1
Naphthalene	ND		ug/kg	3.1	--	1
n-Propylbenzene	ND		ug/kg	0.78	--	1

Project Name: 6473 FULLER MIDDLE **Lab Number:** L1828859

Project Number: 6473 **Report Date:** 08/01/18

SAMPLE RESULTS

Lab ID: L1828859-03 Date Collected: 07/26/18 08:00

Client ID: B-204, S-2 2.4' Date Received: 07/26/18

Sample Location: FRAMINGHAM, MA Field Prep: Not Specified

Sample Depth: 2-4

Parameter	Result	Qualifier	Units	RL	MDL	Dilution Factor
MCP Volatile Organics by 8260/5035 - Westborough Lab						
1,2,3-Trichlorobenzene	ND		ug/kg	1.6	--	1
1,2,4-Trichlorobenzene	ND		ug/kg	1.6	--	1
1,3,5-Trimethylbenzene	ND		ug/kg	1.6	--	1
1,2,4-Trimethylbenzene	ND		ug/kg	1.6	--	1
Diethyl ether	ND		ug/kg	1.6	--	1
Diisopropyl Ether	ND		ug/kg	1.6	--	1
Ethyl-Tert-Butyl-Ether	ND		ug/kg	1.6	--	1
Tertiary-Amyl Methyl Ether	ND		ug/kg	1.6	--	1
1,4-Dioxane	ND		ug/kg	78	--	1

Surrogate	% Recovery	Qualifier	Acceptance Criteria
1,2-Dichloroethane-d4	101		70-130
Toluene-d8	103		70-130
4-Bromofluorobenzene	118		70-130
Dibromofluoromethane	94		70-130

Project Name: 6473 FULLER MIDDLE **Lab Number:** L1828859

Project Number: 6473 **Report Date:** 08/01/18

SAMPLE RESULTS

Lab ID: L1828859-05
Client ID: B-201, S-1 0.5-2'
Sample Location: FRAMINGHAM, MA

Date Collected: 07/26/18 12:00
Date Received: 07/26/18
Field Prep: Not Specified

Sample Depth: 0.5-2
Matrix: Fill
Analytical Method: 97,8260C
Analytical Date: 07/31/18 21:39
Analyst: MV
Percent Solids: 94%

Parameter	Result	Qualifier	Units	RL	MDL	Dilution Factor
MCP Volatile Organics by 8260/5035 - Westborough Lab						
Methylene chloride	ND		ug/kg	4.4	--	1
1,1-Dichloroethane	ND		ug/kg	0.89	--	1
Chloroform	ND		ug/kg	1.3	--	1
Carbon tetrachloride	ND		ug/kg	0.89	--	1
1,2-Dichloropropane	ND		ug/kg	0.89	--	1
Dibromochloromethane	ND		ug/kg	0.89	--	1
1,1,2-Trichloroethane	ND		ug/kg	0.89	--	1
Tetrachloroethene	ND		ug/kg	0.44	--	1
Chlorobenzene	ND		ug/kg	0.44	--	1
Trichlorofluoromethane	ND		ug/kg	3.5	--	1
1,2-Dichloroethane	ND		ug/kg	0.89	--	1
1,1,1-Trichloroethane	ND		ug/kg	0.44	--	1
Bromodichloromethane	ND		ug/kg	0.44	--	1
trans-1,3-Dichloropropene	ND		ug/kg	0.89	--	1
cis-1,3-Dichloropropene	ND		ug/kg	0.44	--	1
1,3-Dichloropropene, Total	ND		ug/kg	0.44	--	1
1,1-Dichloropropene	ND		ug/kg	0.44	--	1
Bromoform	ND		ug/kg	3.5	--	1
1,1,2,2-Tetrachloroethane	ND		ug/kg	0.44	--	1
Benzene	ND		ug/kg	0.44	--	1
Toluene	ND		ug/kg	0.89	--	1
Ethylbenzene	ND		ug/kg	0.89	--	1
Chloromethane	ND		ug/kg	3.5	--	1
Bromomethane	ND		ug/kg	1.8	--	1
Vinyl chloride	ND		ug/kg	0.89	--	1
Chloroethane	ND		ug/kg	1.8	--	1
1,1-Dichloroethene	ND		ug/kg	0.89	--	1
trans-1,2-Dichloroethene	ND		ug/kg	1.3	--	1

Project Name: 6473 FULLER MIDDLE **Lab Number:** L1828859

Project Number: 6473 **Report Date:** 08/01/18

SAMPLE RESULTS

Lab ID: L1828859-05 Date Collected: 07/26/18 12:00

Client ID: B-201, S-1 0.5-2' Date Received: 07/26/18

Sample Location: FRAMINGHAM, MA Field Prep: Not Specified

Sample Depth: 0.5-2

Parameter	Result	Qualifier	Units	RL	MDL	Dilution Factor
MCP Volatile Organics by 8260/5035 - Westborough Lab						
Trichloroethene	ND		ug/kg	0.44	--	1
1,2-Dichlorobenzene	ND		ug/kg	1.8	--	1
1,3-Dichlorobenzene	ND		ug/kg	1.8	--	1
1,4-Dichlorobenzene	ND		ug/kg	1.8	--	1
Methyl tert butyl ether	ND		ug/kg	1.8	--	1
p/m-Xylene	ND		ug/kg	1.8	--	1
o-Xylene	ND		ug/kg	0.89	--	1
Xylenes, Total	ND		ug/kg	0.89	--	1
cis-1,2-Dichloroethene	ND		ug/kg	0.89	--	1
1,2-Dichloroethene, Total	ND		ug/kg	0.89	--	1
Dibromomethane	ND		ug/kg	1.8	--	1
1,2,3-Trichloropropane	ND		ug/kg	1.8	--	1
Styrene	ND		ug/kg	0.89	--	1
Dichlorodifluoromethane	ND		ug/kg	8.9	--	1
Acetone	ND		ug/kg	8.9	--	1
Carbon disulfide	ND		ug/kg	8.9	--	1
Methyl ethyl ketone	ND		ug/kg	8.9	--	1
Methyl isobutyl ketone	ND		ug/kg	8.9	--	1
2-Hexanone	ND		ug/kg	8.9	--	1
Bromochloromethane	ND		ug/kg	1.8	--	1
Tetrahydrofuran	ND		ug/kg	3.5	--	1
2,2-Dichloropropane	ND		ug/kg	1.8	--	1
1,2-Dibromoethane	ND		ug/kg	0.89	--	1
1,3-Dichloropropane	ND		ug/kg	1.8	--	1
1,1,1,2-Tetrachloroethane	ND		ug/kg	0.44	--	1
Bromobenzene	ND		ug/kg	1.8	--	1
n-Butylbenzene	ND		ug/kg	0.89	--	1
sec-Butylbenzene	ND		ug/kg	0.89	--	1
tert-Butylbenzene	ND		ug/kg	1.8	--	1
o-Chlorotoluene	ND		ug/kg	1.8	--	1
p-Chlorotoluene	ND		ug/kg	1.8	--	1
1,2-Dibromo-3-chloropropane	ND		ug/kg	2.6	--	1
Hexachlorobutadiene	ND		ug/kg	3.5	--	1
Isopropylbenzene	ND		ug/kg	0.89	--	1
p-Isopropyltoluene	ND		ug/kg	0.89	--	1
Naphthalene	ND		ug/kg	3.5	--	1
n-Propylbenzene	ND		ug/kg	0.89	--	1

Project Name: 6473 FULLER MIDDLE **Lab Number:** L1828859

Project Number: 6473 **Report Date:** 08/01/18

SAMPLE RESULTS

Lab ID: L1828859-05 Date Collected: 07/26/18 12:00

Client ID: B-201, S-1 0.5-2' Date Received: 07/26/18

Sample Location: FRAMINGHAM, MA Field Prep: Not Specified

Sample Depth: 0.5-2

Parameter	Result	Qualifier	Units	RL	MDL	Dilution Factor
MCP Volatile Organics by 8260/5035 - Westborough Lab						
1,2,3-Trichlorobenzene	ND		ug/kg	1.8	--	1
1,2,4-Trichlorobenzene	ND		ug/kg	1.8	--	1
1,3,5-Trimethylbenzene	ND		ug/kg	1.8	--	1
1,2,4-Trimethylbenzene	ND		ug/kg	1.8	--	1
Diethyl ether	ND		ug/kg	1.8	--	1
Diisopropyl Ether	ND		ug/kg	1.8	--	1
Ethyl-Tert-Butyl-Ether	ND		ug/kg	1.8	--	1
Tertiary-Amyl Methyl Ether	ND		ug/kg	1.8	--	1
1,4-Dioxane	ND		ug/kg	89	--	1

Surrogate	% Recovery	Qualifier	Acceptance Criteria
1,2-Dichloroethane-d4	101		70-130
Toluene-d8	102		70-130
4-Bromofluorobenzene	112		70-130
Dibromofluoromethane	94		70-130

Project Name: 6473 FULLER MIDDLE
Project Number: 6473
Lab Number: L1828859
Report Date: 08/01/18

SAMPLE RESULTS

Lab ID: L1828859-07
Client ID: B-203, S-2 2-3.5
Sample Location: FRAMINGHAM, MA

Date Collected: 07/26/18 14:15
Date Received: 07/26/18
Field Prep: Not Specified

Sample Depth: 2-3.5
Matrix: Fill
Analytical Method: 97,8260C
Analytical Date: 07/31/18 22:04
Analyst: MV
Percent Solids: 94%

Parameter	Result	Qualifier	Units	RL	MDL	Dilution Factor
MCP Volatile Organics by 8260/5035 - Westborough Lab						
Methylene chloride	ND		ug/kg	5.4	--	1
1,1-Dichloroethane	ND		ug/kg	1.1	--	1
Chloroform	ND		ug/kg	1.6	--	1
Carbon tetrachloride	ND		ug/kg	1.1	--	1
1,2-Dichloropropane	ND		ug/kg	1.1	--	1
Dibromochloromethane	ND		ug/kg	1.1	--	1
1,1,2-Trichloroethane	ND		ug/kg	1.1	--	1
Tetrachloroethene	ND		ug/kg	0.54	--	1
Chlorobenzene	ND		ug/kg	0.54	--	1
Trichlorofluoromethane	ND		ug/kg	4.3	--	1
1,2-Dichloroethane	ND		ug/kg	1.1	--	1
1,1,1-Trichloroethane	ND		ug/kg	0.54	--	1
Bromodichloromethane	ND		ug/kg	0.54	--	1
trans-1,3-Dichloropropene	ND		ug/kg	1.1	--	1
cis-1,3-Dichloropropene	ND		ug/kg	0.54	--	1
1,3-Dichloropropene, Total	ND		ug/kg	0.54	--	1
1,1-Dichloropropene	ND		ug/kg	0.54	--	1
Bromoform	ND		ug/kg	4.3	--	1
1,1,2,2-Tetrachloroethane	ND		ug/kg	0.54	--	1
Benzene	ND		ug/kg	0.54	--	1
Toluene	ND		ug/kg	1.1	--	1
Ethylbenzene	ND		ug/kg	1.1	--	1
Chloromethane	ND		ug/kg	4.3	--	1
Bromomethane	ND		ug/kg	2.2	--	1
Vinyl chloride	ND		ug/kg	1.1	--	1
Chloroethane	ND		ug/kg	2.2	--	1
1,1-Dichloroethene	ND		ug/kg	1.1	--	1
trans-1,2-Dichloroethene	ND		ug/kg	1.6	--	1

Project Name: 6473 FULLER MIDDLE **Lab Number:** L1828859

Project Number: 6473 **Report Date:** 08/01/18

SAMPLE RESULTS

Lab ID: L1828859-07 Date Collected: 07/26/18 14:15

Client ID: B-203, S-2 2-3.5 Date Received: 07/26/18

Sample Location: FRAMINGHAM, MA Field Prep: Not Specified

Sample Depth: 2-3.5

Parameter	Result	Qualifier	Units	RL	MDL	Dilution Factor
MCP Volatile Organics by 8260/5035 - Westborough Lab						
Trichloroethene	ND		ug/kg	0.54	--	1
1,2-Dichlorobenzene	ND		ug/kg	2.2	--	1
1,3-Dichlorobenzene	ND		ug/kg	2.2	--	1
1,4-Dichlorobenzene	ND		ug/kg	2.2	--	1
Methyl tert butyl ether	ND		ug/kg	2.2	--	1
p/m-Xylene	ND		ug/kg	2.2	--	1
o-Xylene	ND		ug/kg	1.1	--	1
Xylenes, Total	ND		ug/kg	1.1	--	1
cis-1,2-Dichloroethene	ND		ug/kg	1.1	--	1
1,2-Dichloroethene, Total	ND		ug/kg	1.1	--	1
Dibromomethane	ND		ug/kg	2.2	--	1
1,2,3-Trichloropropane	ND		ug/kg	2.2	--	1
Styrene	ND		ug/kg	1.1	--	1
Dichlorodifluoromethane	ND		ug/kg	11	--	1
Acetone	ND		ug/kg	11	--	1
Carbon disulfide	ND		ug/kg	11	--	1
Methyl ethyl ketone	ND		ug/kg	11	--	1
Methyl isobutyl ketone	ND		ug/kg	11	--	1
2-Hexanone	ND		ug/kg	11	--	1
Bromochloromethane	ND		ug/kg	2.2	--	1
Tetrahydrofuran	ND		ug/kg	4.3	--	1
2,2-Dichloropropane	ND		ug/kg	2.2	--	1
1,2-Dibromoethane	ND		ug/kg	1.1	--	1
1,3-Dichloropropane	ND		ug/kg	2.2	--	1
1,1,1,2-Tetrachloroethane	ND		ug/kg	0.54	--	1
Bromobenzene	ND		ug/kg	2.2	--	1
n-Butylbenzene	ND		ug/kg	1.1	--	1
sec-Butylbenzene	ND		ug/kg	1.1	--	1
tert-Butylbenzene	ND		ug/kg	2.2	--	1
o-Chlorotoluene	ND		ug/kg	2.2	--	1
p-Chlorotoluene	ND		ug/kg	2.2	--	1
1,2-Dibromo-3-chloropropane	ND		ug/kg	3.2	--	1
Hexachlorobutadiene	ND		ug/kg	4.3	--	1
Isopropylbenzene	ND		ug/kg	1.1	--	1
p-Isopropyltoluene	ND		ug/kg	1.1	--	1
Naphthalene	ND		ug/kg	4.3	--	1
n-Propylbenzene	ND		ug/kg	1.1	--	1

Project Name: 6473 FULLER MIDDLE **Lab Number:** L1828859

Project Number: 6473 **Report Date:** 08/01/18

SAMPLE RESULTS

Lab ID: L1828859-07 Date Collected: 07/26/18 14:15

Client ID: B-203, S-2 2-3.5 Date Received: 07/26/18

Sample Location: FRAMINGHAM, MA Field Prep: Not Specified

Sample Depth: 2-3.5

Parameter	Result	Qualifier	Units	RL	MDL	Dilution Factor
MCP Volatile Organics by 8260/5035 - Westborough Lab						
1,2,3-Trichlorobenzene	ND		ug/kg	2.2	--	1
1,2,4-Trichlorobenzene	ND		ug/kg	2.2	--	1
1,3,5-Trimethylbenzene	ND		ug/kg	2.2	--	1
1,2,4-Trimethylbenzene	ND		ug/kg	2.2	--	1
Diethyl ether	ND		ug/kg	2.2	--	1
Diisopropyl Ether	ND		ug/kg	2.2	--	1
Ethyl-Tert-Butyl-Ether	ND		ug/kg	2.2	--	1
Tertiary-Amyl Methyl Ether	ND		ug/kg	2.2	--	1
1,4-Dioxane	ND		ug/kg	110	--	1

Surrogate	% Recovery	Qualifier	Acceptance Criteria
1,2-Dichloroethane-d4	102		70-130
Toluene-d8	104		70-130
4-Bromofluorobenzene	120		70-130
Dibromofluoromethane	95		70-130

Project Name: 6473 FULLER MIDDLE **Lab Number:** L1828859

Project Number: 6473 **Report Date:** 08/01/18

Method Blank Analysis
Batch Quality Control

Analytical Method: 97,8260C
Analytical Date: 07/31/18 19:57
Analyst: AD

Parameter	Result	Qualifier	Units	RL	MDL
MCP Volatile Organics by 8260/5035 - Westborough Lab for sample(s): 01,03,05,07 Batch: WG1141600-5					
Methylene chloride	ND		ug/kg	5.0	--
1,1-Dichloroethane	ND		ug/kg	1.0	--
Chloroform	ND		ug/kg	1.5	--
Carbon tetrachloride	ND		ug/kg	1.0	--
1,2-Dichloropropane	ND		ug/kg	1.0	--
Dibromochloromethane	ND		ug/kg	1.0	--
1,1,2-Trichloroethane	ND		ug/kg	1.0	--
Tetrachloroethene	ND		ug/kg	0.50	--
Chlorobenzene	ND		ug/kg	0.50	--
Trichlorofluoromethane	ND		ug/kg	4.0	--
1,2-Dichloroethane	ND		ug/kg	1.0	--
1,1,1-Trichloroethane	ND		ug/kg	0.50	--
Bromodichloromethane	ND		ug/kg	0.50	--
trans-1,3-Dichloropropene	ND		ug/kg	1.0	--
cis-1,3-Dichloropropene	ND		ug/kg	0.50	--
1,3-Dichloropropene, Total	ND		ug/kg	0.50	--
1,1-Dichloropropene	ND		ug/kg	0.50	--
Bromoform	ND		ug/kg	4.0	--
1,1,2,2-Tetrachloroethane	ND		ug/kg	0.50	--
Benzene	ND		ug/kg	0.50	--
Toluene	ND		ug/kg	1.0	--
Ethylbenzene	ND		ug/kg	1.0	--
Chloromethane	ND		ug/kg	4.0	--
Bromomethane	ND		ug/kg	2.0	--
Vinyl chloride	ND		ug/kg	1.0	--
Chloroethane	ND		ug/kg	2.0	--
1,1-Dichloroethene	ND		ug/kg	1.0	--
trans-1,2-Dichloroethene	ND		ug/kg	1.5	--
Trichloroethene	ND		ug/kg	0.50	--

Project Name: 6473 FULLER MIDDLE **Lab Number:** L1828859

Project Number: 6473 **Report Date:** 08/01/18

Method Blank Analysis
Batch Quality Control

Analytical Method: 97,8260C
Analytical Date: 07/31/18 19:57
Analyst: AD

Parameter	Result	Qualifier	Units	RL	MDL
MCP Volatile Organics by 8260/5035 - Westborough Lab for sample(s): 01,03,05,07 Batch: WG1141600-5					
1,2-Dichlorobenzene	ND		ug/kg	2.0	--
1,3-Dichlorobenzene	ND		ug/kg	2.0	--
1,4-Dichlorobenzene	ND		ug/kg	2.0	--
Methyl tert butyl ether	ND		ug/kg	2.0	--
p/m-Xylene	ND		ug/kg	2.0	--
o-Xylene	ND		ug/kg	1.0	--
Xylenes, Total	ND		ug/kg	1.0	--
cis-1,2-Dichloroethene	ND		ug/kg	1.0	--
1,2-Dichloroethene, Total	ND		ug/kg	1.0	--
Dibromomethane	ND		ug/kg	2.0	--
1,4-Dichlorobutane	ND		ug/kg	10	--
1,2,3-Trichloropropane	ND		ug/kg	2.0	--
Styrene	ND		ug/kg	1.0	--
Dichlorodifluoromethane	ND		ug/kg	10	--
Acetone	ND		ug/kg	10	--
Carbon disulfide	ND		ug/kg	10	--
Methyl ethyl ketone	ND		ug/kg	10	--
Methyl isobutyl ketone	ND		ug/kg	10	--
2-Hexanone	ND		ug/kg	10	--
Ethyl methacrylate	ND		ug/kg	10	--
Acrylonitrile	ND		ug/kg	4.0	--
Bromochloromethane	ND		ug/kg	2.0	--
Tetrahydrofuran	ND		ug/kg	4.0	--
2,2-Dichloropropane	ND		ug/kg	2.0	--
1,2-Dibromoethane	ND		ug/kg	1.0	--
1,3-Dichloropropane	ND		ug/kg	2.0	--
1,1,1,2-Tetrachloroethane	ND		ug/kg	0.50	--
Bromobenzene	ND		ug/kg	2.0	--
n-Butylbenzene	ND		ug/kg	1.0	--

Project Name: 6473 FULLER MIDDLE **Lab Number:** L1828859

Project Number: 6473 **Report Date:** 08/01/18

Method Blank Analysis
Batch Quality Control

Analytical Method: 97,8260C
Analytical Date: 07/31/18 19:57
Analyst: AD

Parameter	Result	Qualifier	Units	RL	MDL
MCP Volatile Organics by 8260/5035 - Westborough Lab for sample(s): 01,03,05,07 Batch: WG1141600-5					
sec-Butylbenzene	ND		ug/kg	1.0	--
tert-Butylbenzene	ND		ug/kg	2.0	--
o-Chlorotoluene	ND		ug/kg	2.0	--
p-Chlorotoluene	ND		ug/kg	2.0	--
1,2-Dibromo-3-chloropropane	ND		ug/kg	3.0	--
Hexachlorobutadiene	ND		ug/kg	4.0	--
Isopropylbenzene	ND		ug/kg	1.0	--
p-Isopropyltoluene	ND		ug/kg	1.0	--
Naphthalene	ND		ug/kg	4.0	--
n-Propylbenzene	ND		ug/kg	1.0	--
1,2,3-Trichlorobenzene	ND		ug/kg	2.0	--
1,2,4-Trichlorobenzene	ND		ug/kg	2.0	--
1,3,5-Trimethylbenzene	ND		ug/kg	2.0	--
1,2,4-Trimethylbenzene	ND		ug/kg	2.0	--
trans-1,4-Dichloro-2-butene	ND		ug/kg	5.0	--
Diethyl ether	ND		ug/kg	2.0	--
Diisopropyl Ether	ND		ug/kg	2.0	--
Ethyl-Tert-Butyl-Ether	ND		ug/kg	2.0	--
Tertiary-Amyl Methyl Ether	ND		ug/kg	2.0	--
1,4-Dioxane	ND		ug/kg	100	--
2-Chloroethylvinyl ether	ND		ug/kg	20	--
Halothane	ND		ug/kg	10	--
Ethyl Acetate	ND		ug/kg	10	--
Freon-113	ND		ug/kg	4.0	--
Vinyl acetate	ND		ug/kg	10	--

Project Name: 6473 FULLER MIDDLE **Lab Number:** L1828859

Project Number: 6473 **Report Date:** 08/01/18

Method Blank Analysis
Batch Quality Control

Analytical Method: 97,8260C
Analytical Date: 07/31/18 19:57
Analyst: AD

Parameter	Result	Qualifier	Units	RL	MDL
MCP Volatile Organics by 8260/5035 - Westborough Lab for sample(s): 01,03,05,07 Batch: WG1141600-5					

Surrogate	%Recovery	Qualifier	Acceptance Criteria
1,2-Dichloroethane-d4	94		70-130
Toluene-d8	102		70-130
4-Bromofluorobenzene	108		70-130
Dibromofluoromethane	90		70-130

Lab Control Sample Analysis
Batch Quality Control

Project Name: 6473 FULLER MIDDLE
Project Number: 6473

Lab Number: L1828859
Report Date: 08/01/18

Parameter	LCS %Recovery	Qual	LCSD %Recovery	Qual	%Recovery Limits	RPD	Qual	RPD Limits
MCP Volatile Organics by 8260/5035 - Westborough Lab Associated sample(s): 01,03,05,07 Batch: WG1141600-3 WG1141600-4								
Methylene chloride	116		116		70-130	0		20
1,1-Dichloroethane	120		120		70-130	0		20
Chloroform	109		108		70-130	1		20
Carbon tetrachloride	100		98		70-130	2		20
1,2-Dichloropropane	123		123		70-130	0		20
Dibromochloromethane	96		97		70-130	1		20
1,1,2-Trichloroethane	108		109		70-130	1		20
Tetrachloroethene	97		96		70-130	1		20
Chlorobenzene	102		101		70-130	1		20
Trichlorofluoromethane	95		93		70-130	2		20
1,2-Dichloroethane	103		104		70-130	1		20
1,1,1-Trichloroethane	104		102		70-130	2		20
Bromodichloromethane	105		106		70-130	1		20
trans-1,3-Dichloropropene	106		106		70-130	0		20
cis-1,3-Dichloropropene	113		112		70-130	1		20
1,1-Dichloropropene	114		112		70-130	2		20
Bromoform	94		95		70-130	1		20
1,1,2,2-Tetrachloroethane	110		109		70-130	1		20
Benzene	114		113		70-130	1		20
Toluene	106		105		70-130	1		20
Ethylbenzene	106		104		70-130	2		20
Chloromethane	130		125		70-130	4		20
Bromomethane	120		114		70-130	5		20

Lab Control Sample Analysis
Batch Quality Control

Project Name: 6473 FULLER MIDDLE
Project Number: 6473

Lab Number: L1828859
Report Date: 08/01/18

Parameter	LCS %Recovery	Qual	LCSD %Recovery	Qual	%Recovery Limits	RPD	Qual	RPD Limits
MCP Volatile Organics by 8260/5035 - Westborough Lab Associated sample(s): 01,03,05,07 Batch: WG1141600-3 WG1141600-4								
Vinyl chloride	105		102		70-130	3		20
Chloroethane	93		90		70-130	3		20
1,1-Dichloroethene	110		108		70-130	2		20
trans-1,2-Dichloroethene	112		111		70-130	1		20
Trichloroethene	107		108		70-130	1		20
1,2-Dichlorobenzene	100		97		70-130	3		20
1,3-Dichlorobenzene	101		98		70-130	3		20
1,4-Dichlorobenzene	100		99		70-130	1		20
Methyl tert butyl ether	108		109		70-130	1		20
p/m-Xylene	103		102		70-130	1		20
o-Xylene	101		101		70-130	0		20
cis-1,2-Dichloroethene	111		110		70-130	1		20
Dibromomethane	104		105		70-130	1		20
1,4-Dichlorobutane	118		117		70-130	1		20
1,2,3-Trichloropropane	109		110		70-130	1		20
Styrene	104		104		70-130	0		20
Dichlorodifluoromethane	95		93		70-130	2		20
Acetone	129		**134**	Q	70-130	4		20
Carbon disulfide	113		111		70-130	2		20
Methyl ethyl ketone	129		**140**	Q	70-130	8		20
Methyl isobutyl ketone	121		123		70-130	2		20
2-Hexanone	115		121		70-130	5		20
Ethyl methacrylate	107		110		70-130	3		20

Lab Control Sample Analysis
Batch Quality Control

Project Name: 6473 FULLER MIDDLE
Project Number: 6473

Lab Number: L1828859
Report Date: 08/01/18

Parameter	LCS %Recovery	Qual	LCSD %Recovery	Qual	%Recovery Limits	RPD	Qual	RPD Limits
MCP Volatile Organics by 8260/5035 - Westborough Lab Associated sample(s): 01,03,05,07 Batch: WG1141600-3 WG1141600-4								
Acrylonitrile	**131**	Q	**136**	Q	70-130	4		20
Bromochloromethane	104		104		70-130	0		20
Tetrahydrofuran	128		**133**	Q	70-130	4		20
2,2-Dichloropropane	111		107		70-130	4		20
1,2-Dibromoethane	101		102		70-130	1		20
1,3-Dichloropropane	110		110		70-130	0		20
1,1,1,2-Tetrachloroethane	98		98		70-130	0		20
Bromobenzene	100		98		70-130	2		20
n-Butylbenzene	109		105		70-130	4		20
sec-Butylbenzene	106		103		70-130	3		20
tert-Butylbenzene	103		100		70-130	3		20
o-Chlorotoluene	123		120		70-130	2		20
p-Chlorotoluene	108		106		70-130	2		20
1,2-Dibromo-3-chloropropane	91		92		70-130	1		20
Hexachlorobutadiene	96		94		70-130	2		20
Isopropylbenzene	107		103		70-130	4		20
p-Isopropyltoluene	103		101		70-130	2		20
Naphthalene	101		101		70-130	0		20
n-Propylbenzene	110		107		70-130	3		20
1,2,3-Trichlorobenzene	99		98		70-130	1		20
1,2,4-Trichlorobenzene	100		99		70-130	1		20
1,3,5-Trimethylbenzene	104		103		70-130	1		20
1,2,4-Trimethylbenzene	104		102		70-130	2		20

Lab Control Sample Analysis
Batch Quality Control

Project Name: 6473 FULLER MIDDLE
Project Number: 6473

Lab Number: L1828859
Report Date: 08/01/18

Parameter	LCS %Recovery	Qual	LCSD %Recovery	Qual	%Recovery Limits	RPD	Qual	RPD Limits
MCP Volatile Organics by 8260/5035 - Westborough Lab Associated sample(s): 01,03,05,07 Batch: WG1141600-3 WG1141600-4								
trans-1,4-Dichloro-2-butene	108		110		70-130	2		20
Diethyl ether	115		117		70-130	2		20
Diisopropyl Ether	**132**	Q	**132**	Q	70-130	0		20
Ethyl-Tert-Butyl-Ether	113		114		70-130	1		20
Tertiary-Amyl Methyl Ether	105		106		70-130	1		20
1,4-Dioxane	110		114		70-130	4		20
2-Chloroethylvinyl ether	122		126		70-130	3		20
Halothane	103		102		70-130	1		20
Ethyl Acetate	128		**132**	Q	70-130	3		20
Freon-113	104		103		70-130	1		20
Vinyl acetate	124		125		70-130	1		20

Surrogate	LCS %Recovery	Qual	LCSD %Recovery	Qual	Acceptance Criteria
1,2-Dichloroethane-d4	94		96		70-130
Toluene-d8	102		101		70-130
4-Bromofluorobenzene	109		108		70-130
Dibromofluoromethane	93		94		70-130

SEMIVOLATILES

Project Name: 6473 FULLER MIDDLE
Project Number: 6473

Lab Number: L1828859
Report Date: 08/01/18

SAMPLE RESULTS

Lab ID: L1828859-02
Client ID: B-205 0-4.5 FILL
Sample Location: FRAMINGHAM, MA

Date Collected: 07/26/18 10:15
Date Received: 07/26/18
Field Prep: Not Specified

Sample Depth: 0-4.5
Matrix: Fill
Analytical Method: 97,8270D
Analytical Date: 07/31/18 07:17
Analyst: RC
Percent Solids: 86%

Extraction Method: EPA 3546
Extraction Date: 07/29/18 00:46

Parameter	Result	Qualifier	Units	RL	MDL	Dilution Factor
MCP Semivolatile Organics - Westborough Lab						
Acenaphthene	ND		ug/kg	150	--	1
1,2,4-Trichlorobenzene	ND		ug/kg	190	--	1
Hexachlorobenzene	ND		ug/kg	120	--	1
Bis(2-chloroethyl)ether	ND		ug/kg	170	--	1
2-Chloronaphthalene	ND		ug/kg	190	--	1
1,2-Dichlorobenzene	ND		ug/kg	190	--	1
1,3-Dichlorobenzene	ND		ug/kg	190	--	1
1,4-Dichlorobenzene	ND		ug/kg	190	--	1
3,3'-Dichlorobenzidine	ND		ug/kg	190	--	1
2,4-Dinitrotoluene	ND		ug/kg	190	--	1
2,6-Dinitrotoluene	ND		ug/kg	190	--	1
Azobenzene	ND		ug/kg	190	--	1
Fluoranthene	ND		ug/kg	120	--	1
4-Bromophenyl phenyl ether	ND		ug/kg	190	--	1
Bis(2-chloroisopropyl)ether	ND		ug/kg	230	--	1
Bis(2-chloroethoxy)methane	ND		ug/kg	210	--	1
Hexachlorobutadiene	ND		ug/kg	190	--	1
Hexachloroethane	ND		ug/kg	150	--	1
Isophorone	ND		ug/kg	170	--	1
Naphthalene	ND		ug/kg	190	--	1
Nitrobenzene	ND		ug/kg	170	--	1
Bis(2-ethylhexyl)phthalate	ND		ug/kg	190	--	1
Butyl benzyl phthalate	ND		ug/kg	190	--	1
Di-n-butylphthalate	ND		ug/kg	190	--	1
Di-n-octylphthalate	ND		ug/kg	190	--	1
Diethyl phthalate	ND		ug/kg	190	--	1
Dimethyl phthalate	ND		ug/kg	190	--	1
Benzo(a)anthracene	ND		ug/kg	120	--	1

Project Name: 6473 FULLER MIDDLE **Lab Number:** L1828859

Project Number: 6473 **Report Date:** 08/01/18

SAMPLE RESULTS

Lab ID: L1828859-02 Date Collected: 07/26/18 10:15

Client ID: B-205 0-4.5 FILL Date Received: 07/26/18

Sample Location: FRAMINGHAM, MA Field Prep: Not Specified

Sample Depth: 0-4.5

Parameter	Result	Qualifier	Units	RL	MDL	Dilution Factor
MCP Semivolatile Organics - Westborough Lab						
Benzo(a)pyrene	ND		ug/kg	150	--	1
Benzo(b)fluoranthene	ND		ug/kg	120	--	1
Benzo(k)fluoranthene	ND		ug/kg	120	--	1
Chrysene	ND		ug/kg	120	--	1
Acenaphthylene	ND		ug/kg	150	--	1
Anthracene	ND		ug/kg	120	--	1
Benzo(ghi)perylene	ND		ug/kg	150	--	1
Fluorene	ND		ug/kg	190	--	1
Phenanthrene	ND		ug/kg	120	--	1
Dibenzo(a,h)anthracene	ND		ug/kg	120	--	1
Indeno(1,2,3-cd)pyrene	ND		ug/kg	150	--	1
Pyrene	ND		ug/kg	120	--	1
Aniline	ND		ug/kg	230	--	1
4-Chloroaniline	ND		ug/kg	190	--	1
Dibenzofuran	ND		ug/kg	190	--	1
2-Methylnaphthalene	ND		ug/kg	230	--	1
Acetophenone	ND		ug/kg	190	--	1
2,4,6-Trichlorophenol	ND		ug/kg	120	--	1
2-Chlorophenol	ND		ug/kg	190	--	1
2,4-Dichlorophenol	ND		ug/kg	170	--	1
2,4-Dimethylphenol	ND		ug/kg	190	--	1
2-Nitrophenol	ND		ug/kg	420	--	1
4-Nitrophenol	ND		ug/kg	270	--	1
2,4-Dinitrophenol	ND		ug/kg	920	--	1
Pentachlorophenol	ND		ug/kg	380	--	1
Phenol	ND		ug/kg	190	--	1
2-Methylphenol	ND		ug/kg	190	--	1
3-Methylphenol/4-Methylphenol	ND		ug/kg	280	--	1
2,4,5-Trichlorophenol	ND		ug/kg	190	--	1
Pyridine	ND		ug/kg	210	--	1

Project Name: 6473 FULLER MIDDLE **Lab Number:** L1828859

Project Number: 6473 **Report Date:** 08/01/18

SAMPLE RESULTS

Lab ID: L1828859-02 Date Collected: 07/26/18 10:15

Client ID: B-205 0-4.5 FILL Date Received: 07/26/18

Sample Location: FRAMINGHAM, MA Field Prep: Not Specified

Sample Depth: 0-4.5

Parameter	Result	Qualifier	Units	RL	MDL	Dilution Factor
MCP Semivolatile Organics - Westborough Lab						

Surrogate	% Recovery	Qualifier	Acceptance Criteria
2-Fluorophenol	79		30-130
Phenol-d6	82		30-130
Nitrobenzene-d5	76		30-130
2-Fluorobiphenyl	85		30-130
2,4,6-Tribromophenol	82		30-130
4-Terphenyl-d14	84		30-130

Project Name: 6473 FULLER MIDDLE
Project Number: 6473

Lab Number: L1828859
Report Date: 08/01/18

SAMPLE RESULTS

Lab ID: L1828859-04
Client ID: B-204 0-4 FILL
Sample Location: FRAMINGHAM, MA

Date Collected: 07/26/18 08:00
Date Received: 07/26/18
Field Prep: Not Specified

Sample Depth: 0-4
Matrix: Fill
Analytical Method: 97,8270D
Analytical Date: 07/31/18 07:43
Analyst: RC
Percent Solids: 90%

Extraction Method: EPA 3546
Extraction Date: 07/29/18 00:46

Parameter	Result	Qualifier	Units	RL	MDL	Dilution Factor
MCP Semivolatile Organics - Westborough Lab						
Acenaphthene	ND		ug/kg	140	--	1
1,2,4-Trichlorobenzene	ND		ug/kg	180	--	1
Hexachlorobenzene	ND		ug/kg	110	--	1
Bis(2-chloroethyl)ether	ND		ug/kg	160	--	1
2-Chloronaphthalene	ND		ug/kg	180	--	1
1,2-Dichlorobenzene	ND		ug/kg	180	--	1
1,3-Dichlorobenzene	ND		ug/kg	180	--	1
1,4-Dichlorobenzene	ND		ug/kg	180	--	1
3,3'-Dichlorobenzidine	ND		ug/kg	180	--	1
2,4-Dinitrotoluene	ND		ug/kg	180	--	1
2,6-Dinitrotoluene	ND		ug/kg	180	--	1
Azobenzene	ND		ug/kg	180	--	1
Fluoranthene	ND		ug/kg	110	--	1
4-Bromophenyl phenyl ether	ND		ug/kg	180	--	1
Bis(2-chloroisopropyl)ether	ND		ug/kg	220	--	1
Bis(2-chloroethoxy)methane	ND		ug/kg	200	--	1
Hexachlorobutadiene	ND		ug/kg	180	--	1
Hexachloroethane	ND		ug/kg	140	--	1
Isophorone	ND		ug/kg	160	--	1
Naphthalene	ND		ug/kg	180	--	1
Nitrobenzene	ND		ug/kg	160	--	1
Bis(2-ethylhexyl)phthalate	ND		ug/kg	180	--	1
Butyl benzyl phthalate	ND		ug/kg	180	--	1
Di-n-butylphthalate	ND		ug/kg	180	--	1
Di-n-octylphthalate	ND		ug/kg	180	--	1
Diethyl phthalate	ND		ug/kg	180	--	1
Dimethyl phthalate	ND		ug/kg	180	--	1
Benzo(a)anthracene	ND		ug/kg	110	--	1

Project Name: 6473 FULLER MIDDLE **Lab Number:** L1828859

Project Number: 6473 **Report Date:** 08/01/18

SAMPLE RESULTS

Lab ID: L1828859-04 Date Collected: 07/26/18 08:00

Client ID: B-204 0-4 FILL Date Received: 07/26/18

Sample Location: FRAMINGHAM, MA Field Prep: Not Specified

Sample Depth: 0-4

Parameter	Result	Qualifier	Units	RL	MDL	Dilution Factor
MCP Semivolatile Organics - Westborough Lab						
Benzo(a)pyrene	ND		ug/kg	140	--	1
Benzo(b)fluoranthene	ND		ug/kg	110	--	1
Benzo(k)fluoranthene	ND		ug/kg	110	--	1
Chrysene	ND		ug/kg	110	--	1
Acenaphthylene	ND		ug/kg	140	--	1
Anthracene	ND		ug/kg	110	--	1
Benzo(ghi)perylene	ND		ug/kg	140	--	1
Fluorene	ND		ug/kg	180	--	1
Phenanthrene	ND		ug/kg	110	--	1
Dibenzo(a,h)anthracene	ND		ug/kg	110	--	1
Indeno(1,2,3-cd)pyrene	ND		ug/kg	140	--	1
Pyrene	ND		ug/kg	110	--	1
Aniline	ND		ug/kg	220	--	1
4-Chloroaniline	ND		ug/kg	180	--	1
Dibenzofuran	ND		ug/kg	180	--	1
2-Methylnaphthalene	ND		ug/kg	220	--	1
Acetophenone	ND		ug/kg	180	--	1
2,4,6-Trichlorophenol	ND		ug/kg	110	--	1
2-Chlorophenol	ND		ug/kg	180	--	1
2,4-Dichlorophenol	ND		ug/kg	160	--	1
2,4-Dimethylphenol	ND		ug/kg	180	--	1
2-Nitrophenol	ND		ug/kg	390	--	1
4-Nitrophenol	ND		ug/kg	250	--	1
2,4-Dinitrophenol	ND		ug/kg	870	--	1
Pentachlorophenol	ND		ug/kg	360	--	1
Phenol	ND		ug/kg	180	--	1
2-Methylphenol	ND		ug/kg	180	--	1
3-Methylphenol/4-Methylphenol	ND		ug/kg	260	--	1
2,4,5-Trichlorophenol	ND		ug/kg	180	--	1
Pyridine	ND		ug/kg	200	--	1

Project Name: 6473 FULLER MIDDLE **Lab Number:** L1828859

Project Number: 6473 **Report Date:** 08/01/18

SAMPLE RESULTS

Lab ID: L1828859-04 Date Collected: 07/26/18 08:00

Client ID: B-204 0-4 FILL Date Received: 07/26/18

Sample Location: FRAMINGHAM, MA Field Prep: Not Specified

Sample Depth: 0-4

Parameter	Result	Qualifier	Units	RL	MDL	Dilution Factor

MCP Semivolatile Organics - Westborough Lab

Surrogate	% Recovery	Qualifier	Acceptance Criteria
2-Fluorophenol	83		30-130
Phenol-d6	86		30-130
Nitrobenzene-d5	79		30-130
2-Fluorobiphenyl	88		30-130
2,4,6-Tribromophenol	84		30-130
4-Terphenyl-d14	87		30-130

Project Name: 6473 FULLER MIDDLE
Project Number: 6473

Lab Number: L1828859
Report Date: 08/01/18

SAMPLE RESULTS

Lab ID: L1828859-06
Client ID: B-201 0.5-5 FILL
Sample Location: FRAMINGHAM, MA

Date Collected: 07/26/18 12:00
Date Received: 07/26/18
Field Prep: Not Specified

Sample Depth: 0.5-5
Matrix: Fill
Analytical Method: 97,8270D
Analytical Date: 07/31/18 08:10
Analyst: RC
Percent Solids: 90%

Extraction Method: EPA 3546
Extraction Date: 07/29/18 00:46

Parameter	Result	Qualifier	Units	RL	MDL	Dilution Factor
MCP Semivolatile Organics - Westborough Lab						
Acenaphthene	ND		ug/kg	150	--	1
1,2,4-Trichlorobenzene	ND		ug/kg	180	--	1
Hexachlorobenzene	ND		ug/kg	110	--	1
Bis(2-chloroethyl)ether	ND		ug/kg	160	--	1
2-Chloronaphthalene	ND		ug/kg	180	--	1
1,2-Dichlorobenzene	ND		ug/kg	180	--	1
1,3-Dichlorobenzene	ND		ug/kg	180	--	1
1,4-Dichlorobenzene	ND		ug/kg	180	--	1
3,3'-Dichlorobenzidine	ND		ug/kg	180	--	1
2,4-Dinitrotoluene	ND		ug/kg	180	--	1
2,6-Dinitrotoluene	ND		ug/kg	180	--	1
Azobenzene	ND		ug/kg	180	--	1
Fluoranthene	150		ug/kg	110	--	1
4-Bromophenyl phenyl ether	ND		ug/kg	180	--	1
Bis(2-chloroisopropyl)ether	ND		ug/kg	220	--	1
Bis(2-chloroethoxy)methane	ND		ug/kg	200	--	1
Hexachlorobutadiene	ND		ug/kg	180	--	1
Hexachloroethane	ND		ug/kg	150	--	1
Isophorone	ND		ug/kg	160	--	1
Naphthalene	ND		ug/kg	180	--	1
Nitrobenzene	ND		ug/kg	160	--	1
Bis(2-ethylhexyl)phthalate	ND		ug/kg	180	--	1
Butyl benzyl phthalate	ND		ug/kg	180	--	1
Di-n-butylphthalate	ND		ug/kg	180	--	1
Di-n-octylphthalate	ND		ug/kg	180	--	1
Diethyl phthalate	ND		ug/kg	180	--	1
Dimethyl phthalate	ND		ug/kg	180	--	1
Benzo(a)anthracene	ND		ug/kg	110	--	1

Project Name: 6473 FULLER MIDDLE **Lab Number:** L1828859

Project Number: 6473 **Report Date:** 08/01/18

SAMPLE RESULTS

Lab ID: L1828859-06 Date Collected: 07/26/18 12:00

Client ID: B-201 0.5-5 FILL Date Received: 07/26/18

Sample Location: FRAMINGHAM, MA Field Prep: Not Specified

Sample Depth: 0.5-5

Parameter	Result	Qualifier	Units	RL	MDL	Dilution Factor
MCP Semivolatile Organics - Westborough Lab						
Benzo(a)pyrene	ND		ug/kg	150	--	1
Benzo(b)fluoranthene	ND		ug/kg	110	--	1
Benzo(k)fluoranthene	ND		ug/kg	110	--	1
Chrysene	ND		ug/kg	110	--	1
Acenaphthylene	ND		ug/kg	150	--	1
Anthracene	ND		ug/kg	110	--	1
Benzo(ghi)perylene	ND		ug/kg	150	--	1
Fluorene	ND		ug/kg	180	--	1
Phenanthrene	ND		ug/kg	110	--	1
Dibenzo(a,h)anthracene	ND		ug/kg	110	--	1
Indeno(1,2,3-cd)pyrene	ND		ug/kg	150	--	1
Pyrene	110		ug/kg	110	--	1
Aniline	ND		ug/kg	220	--	1
4-Chloroaniline	ND		ug/kg	180	--	1
Dibenzofuran	ND		ug/kg	180	--	1
2-Methylnaphthalene	ND		ug/kg	220	--	1
Acetophenone	ND		ug/kg	180	--	1
2,4,6-Trichlorophenol	ND		ug/kg	110	--	1
2-Chlorophenol	ND		ug/kg	180	--	1
2,4-Dichlorophenol	ND		ug/kg	160	--	1
2,4-Dimethylphenol	ND		ug/kg	180	--	1
2-Nitrophenol	ND		ug/kg	400	--	1
4-Nitrophenol	ND		ug/kg	260	--	1
2,4-Dinitrophenol	ND		ug/kg	880	--	1
Pentachlorophenol	ND		ug/kg	370	--	1
Phenol	ND		ug/kg	180	--	1
2-Methylphenol	ND		ug/kg	180	--	1
3-Methylphenol/4-Methylphenol	ND		ug/kg	260	--	1
2,4,5-Trichlorophenol	ND		ug/kg	180	--	1
Pyridine	ND		ug/kg	200	--	1

Project Name: 6473 FULLER MIDDLE **Lab Number:** L1828859

Project Number: 6473 **Report Date:** 08/01/18

SAMPLE RESULTS

Lab ID: L1828859-06 Date Collected: 07/26/18 12:00

Client ID: B-201 0.5-5 FILL Date Received: 07/26/18

Sample Location: FRAMINGHAM, MA Field Prep: Not Specified

Sample Depth: 0.5-5

Parameter	Result	Qualifier	Units	RL	MDL	Dilution Factor
MCP Semivolatile Organics - Westborough Lab						

Surrogate	% Recovery	Qualifier	Acceptance Criteria
2-Fluorophenol	90		30-130
Phenol-d6	96		30-130
Nitrobenzene-d5	93		30-130
2-Fluorobiphenyl	101		30-130
2,4,6-Tribromophenol	98		30-130
4-Terphenyl-d14	104		30-130

Project Name: 6473 FULLER MIDDLE
Project Number: 6473
Lab Number: L1828859
Report Date: 08/01/18

SAMPLE RESULTS

Lab ID: L1828859-08
Client ID: B-203 0.4-3.5 FILL
Sample Location: FRAMINGHAM, MA

Date Collected: 07/26/18 14:15
Date Received: 07/26/18
Field Prep: Not Specified

Sample Depth: 0.4-3.5
Matrix: Fill
Analytical Method: 97,8270D
Analytical Date: 07/31/18 08:36
Analyst: RC
Percent Solids: 95%

Extraction Method: EPA 3546
Extraction Date: 07/29/18 00:46

Parameter	Result	Qualifier	Units	RL	MDL	Dilution Factor
MCP Semivolatile Organics - Westborough Lab						
Acenaphthene	ND		ug/kg	140	--	1
1,2,4-Trichlorobenzene	ND		ug/kg	180	--	1
Hexachlorobenzene	ND		ug/kg	100	--	1
Bis(2-chloroethyl)ether	ND		ug/kg	160	--	1
2-Chloronaphthalene	ND		ug/kg	180	--	1
1,2-Dichlorobenzene	ND		ug/kg	180	--	1
1,3-Dichlorobenzene	ND		ug/kg	180	--	1
1,4-Dichlorobenzene	ND		ug/kg	180	--	1
3,3'-Dichlorobenzidine	ND		ug/kg	180	--	1
2,4-Dinitrotoluene	ND		ug/kg	180	--	1
2,6-Dinitrotoluene	ND		ug/kg	180	--	1
Azobenzene	ND		ug/kg	180	--	1
Fluoranthene	ND		ug/kg	100	--	1
4-Bromophenyl phenyl ether	ND		ug/kg	180	--	1
Bis(2-chloroisopropyl)ether	ND		ug/kg	210	--	1
Bis(2-chloroethoxy)methane	ND		ug/kg	190	--	1
Hexachlorobutadiene	ND		ug/kg	180	--	1
Hexachloroethane	ND		ug/kg	140	--	1
Isophorone	ND		ug/kg	160	--	1
Naphthalene	ND		ug/kg	180	--	1
Nitrobenzene	ND		ug/kg	160	--	1
Bis(2-ethylhexyl)phthalate	ND		ug/kg	180	--	1
Butyl benzyl phthalate	ND		ug/kg	180	--	1
Di-n-butylphthalate	ND		ug/kg	180	--	1
Di-n-octylphthalate	ND		ug/kg	180	--	1
Diethyl phthalate	ND		ug/kg	180	--	1
Dimethyl phthalate	ND		ug/kg	180	--	1
Benzo(a)anthracene	ND		ug/kg	100	--	1

Project Name: 6473 FULLER MIDDLE **Lab Number:** L1828859

Project Number: 6473 **Report Date:** 08/01/18

SAMPLE RESULTS

Lab ID: L1828859-08 Date Collected: 07/26/18 14:15

Client ID: B-203 0.4-3.5 FILL Date Received: 07/26/18

Sample Location: FRAMINGHAM, MA Field Prep: Not Specified

Sample Depth: 0.4-3.5

Parameter	Result	Qualifier	Units	RL	MDL	Dilution Factor
MCP Semivolatile Organics - Westborough Lab						
Benzo(a)pyrene	ND		ug/kg	140	--	1
Benzo(b)fluoranthene	ND		ug/kg	100	--	1
Benzo(k)fluoranthene	ND		ug/kg	100	--	1
Chrysene	ND		ug/kg	100	--	1
Acenaphthylene	ND		ug/kg	140	--	1
Anthracene	ND		ug/kg	100	--	1
Benzo(ghi)perylene	ND		ug/kg	140	--	1
Fluorene	ND		ug/kg	180	--	1
Phenanthrene	ND		ug/kg	100	--	1
Dibenzo(a,h)anthracene	ND		ug/kg	100	--	1
Indeno(1,2,3-cd)pyrene	ND		ug/kg	140	--	1
Pyrene	ND		ug/kg	100	--	1
Aniline	ND		ug/kg	210	--	1
4-Chloroaniline	ND		ug/kg	180	--	1
Dibenzofuran	ND		ug/kg	180	--	1
2-Methylnaphthalene	ND		ug/kg	210	--	1
Acetophenone	ND		ug/kg	180	--	1
2,4,6-Trichlorophenol	ND		ug/kg	100	--	1
2-Chlorophenol	ND		ug/kg	180	--	1
2,4-Dichlorophenol	ND		ug/kg	160	--	1
2,4-Dimethylphenol	ND		ug/kg	180	--	1
2-Nitrophenol	ND		ug/kg	380	--	1
4-Nitrophenol	ND		ug/kg	240	--	1
2,4-Dinitrophenol	ND		ug/kg	840	--	1
Pentachlorophenol	ND		ug/kg	350	--	1
Phenol	ND		ug/kg	180	--	1
2-Methylphenol	ND		ug/kg	180	--	1
3-Methylphenol/4-Methylphenol	ND		ug/kg	250	--	1
2,4,5-Trichlorophenol	ND		ug/kg	180	--	1
Pyridine	ND		ug/kg	190	--	1

Project Name: 6473 FULLER MIDDLE **Lab Number:** L1828859

Project Number: 6473 **Report Date:** 08/01/18

SAMPLE RESULTS

Lab ID: L1828859-08 Date Collected: 07/26/18 14:15

Client ID: B-203 0.4-3.5 FILL Date Received: 07/26/18

Sample Location: FRAMINGHAM, MA Field Prep: Not Specified

Sample Depth: 0.4-3.5

Parameter	Result	Qualifier	Units	RL	MDL	Dilution Factor

MCP Semivolatile Organics - Westborough Lab

Surrogate	% Recovery	Qualifier	Acceptance Criteria
2-Fluorophenol	88		30-130
Phenol-d6	96		30-130
Nitrobenzene-d5	88		30-130
2-Fluorobiphenyl	102		30-130
2,4,6-Tribromophenol	94		30-130
4-Terphenyl-d14	106		30-130

Project Name: 6473 FULLER MIDDLE
Project Number: 6473

Lab Number: L1828859
Report Date: 08/01/18

Method Blank Analysis
Batch Quality Control

Analytical Method: 97,8270D
Analytical Date: 07/30/18 09:39
Analyst: RC

Extraction Method: EPA 3546
Extraction Date: 07/29/18 00:46

Parameter	Result	Qualifier	Units	RL	MDL
MCP Semivolatile Organics - Westborough Lab for sample(s): 02,04,06,08 Batch: WG1140635-1					
Acenaphthene	ND		ug/kg	130	--
1,2,4-Trichlorobenzene	ND		ug/kg	160	--
Hexachlorobenzene	ND		ug/kg	99	--
Bis(2-chloroethyl)ether	ND		ug/kg	150	--
2-Chloronaphthalene	ND		ug/kg	160	--
1,2-Dichlorobenzene	ND		ug/kg	160	--
1,3-Dichlorobenzene	ND		ug/kg	160	--
1,4-Dichlorobenzene	ND		ug/kg	160	--
3,3'-Dichlorobenzidine	ND		ug/kg	160	--
2,4-Dinitrotoluene	ND		ug/kg	160	--
2,6-Dinitrotoluene	ND		ug/kg	160	--
Azobenzene	ND		ug/kg	160	--
Fluoranthene	ND		ug/kg	99	--
4-Bromophenyl phenyl ether	ND		ug/kg	160	--
Bis(2-chloroisopropyl)ether	ND		ug/kg	200	--
Bis(2-chloroethoxy)methane	ND		ug/kg	180	--
Hexachlorobutadiene	ND		ug/kg	160	--
Hexachloroethane	ND		ug/kg	130	--
Isophorone	ND		ug/kg	150	--
Naphthalene	ND		ug/kg	160	--
Nitrobenzene	ND		ug/kg	150	--
Bis(2-ethylhexyl)phthalate	ND		ug/kg	160	--
Butyl benzyl phthalate	ND		ug/kg	160	--
Di-n-butylphthalate	ND		ug/kg	160	--
Di-n-octylphthalate	ND		ug/kg	160	--
Diethyl phthalate	ND		ug/kg	160	--
Dimethyl phthalate	ND		ug/kg	160	--
Benzo(a)anthracene	ND		ug/kg	99	--
Benzo(a)pyrene	ND		ug/kg	130	--

Project Name: 6473 FULLER MIDDLE
Project Number: 6473

Lab Number: L1828859
Report Date: 08/01/18

Method Blank Analysis
Batch Quality Control

Analytical Method: 97,8270D
Analytical Date: 07/30/18 09:39
Analyst: RC

Extraction Method: EPA 3546
Extraction Date: 07/29/18 00:46

Parameter	Result	Qualifier	Units	RL	MDL
MCP Semivolatile Organics - Westborough Lab for sample(s): 02,04,06,08 Batch: WG1140635-1					
Benzo(b)fluoranthene	ND		ug/kg	99	--
Benzo(k)fluoranthene	ND		ug/kg	99	--
Chrysene	ND		ug/kg	99	--
Acenaphthylene	ND		ug/kg	130	--
Anthracene	ND		ug/kg	99	--
Benzo(ghi)perylene	ND		ug/kg	130	--
Fluorene	ND		ug/kg	160	--
Phenanthrene	ND		ug/kg	99	--
Dibenzo(a,h)anthracene	ND		ug/kg	99	--
Indeno(1,2,3-cd)pyrene	ND		ug/kg	130	--
Pyrene	ND		ug/kg	99	--
Aniline	ND		ug/kg	200	--
4-Chloroaniline	ND		ug/kg	160	--
Dibenzofuran	ND		ug/kg	160	--
2-Methylnaphthalene	ND		ug/kg	200	--
Acetophenone	ND		ug/kg	160	--
2,4,6-Trichlorophenol	ND		ug/kg	99	--
2-Chlorophenol	ND		ug/kg	160	--
2,4-Dichlorophenol	ND		ug/kg	150	--
2,4-Dimethylphenol	ND		ug/kg	160	--
2-Nitrophenol	ND		ug/kg	360	--
4-Nitrophenol	ND		ug/kg	230	--
2,4-Dinitrophenol	ND		ug/kg	790	--
Pentachlorophenol	ND		ug/kg	330	--
Phenol	ND		ug/kg	160	--
2-Methylphenol	ND		ug/kg	160	--
3-Methylphenol/4-Methylphenol	ND		ug/kg	240	--
2,4,5-Trichlorophenol	ND		ug/kg	160	--
Pyridine	ND		ug/kg	180	--

Project Name: 6473 FULLER MIDDLE
Project Number: 6473

Lab Number: L1828859
Report Date: 08/01/18

Method Blank Analysis
Batch Quality Control

Analytical Method: 97,8270D
Analytical Date: 07/30/18 09:39
Analyst: RC

Extraction Method: EPA 3546
Extraction Date: 07/29/18 00:46

Parameter	Result	Qualifier	Units	RL	MDL
MCP Semivolatile Organics - Westborough Lab for sample(s): 02,04,06,08 Batch: WG1140635-1					
Tentatively Identified Compounds					
No Tentatively Identified Compounds	ND		ug/kg		

Surrogate	%Recovery	Qualifier	Acceptance Criteria
2-Fluorophenol	78		30-130
Phenol-d6	83		30-130
Nitrobenzene-d5	75		30-130
2-Fluorobiphenyl	77		30-130
2,4,6-Tribromophenol	82		30-130
4-Terphenyl-d14	86		30-130

Lab Control Sample Analysis
Batch Quality Control

Project Name: 6473 FULLER MIDDLE
Project Number: 6473

Lab Number: L1828859
Report Date: 08/01/18

Parameter	LCS %Recovery	Qual	LCSD %Recovery	Qual	%Recovery Limits	RPD	Qual	RPD Limits
MCP Semivolatile Organics - Westborough Lab Associated sample(s): 02,04,06,08 Batch: WG1140635-2 WG1140635-3								
Acenaphthene	71		82		40-140	14		30
1,2,4-Trichlorobenzene	66		69		40-140	4		30
Hexachlorobenzene	72		84		40-140	15		30
Bis(2-chloroethyl)ether	70		73		40-140	4		30
2-Chloronaphthalene	72		83		40-140	14		30
1,2-Dichlorobenzene	66		68		40-140	3		30
1,3-Dichlorobenzene	65		68		40-140	5		30
1,4-Dichlorobenzene	64		66		40-140	3		30
3,3'-Dichlorobenzidine	53		51		40-140	4		30
2,4-Dinitrotoluene	79		90		40-140	13		30
2,6-Dinitrotoluene	74		86		40-140	15		30
Azobenzene	76		86		40-140	12		30
Fluoranthene	73		87		40-140	18		30
4-Bromophenyl phenyl ether	73		80		40-140	9		30
Bis(2-chloroisopropyl)ether	70		76		40-140	8		30
Bis(2-chloroethoxy)methane	73		79		40-140	8		30
Hexachlorobutadiene	68		73		40-140	7		30
Hexachloroethane	64		68		40-140	6		30
Isophorone	74		79		40-140	7		30
Naphthalene	68		76		40-140	11		30
Nitrobenzene	72		75		40-140	4		30
Bis(2-ethylhexyl)phthalate	74		81		40-140	9		30
Butyl benzyl phthalate	77		91		40-140	17		30

Lab Control Sample Analysis
Batch Quality Control

Project Name: 6473 FULLER MIDDLE
Project Number: 6473

Lab Number: L1828859
Report Date: 08/01/18

Parameter	LCS %Recovery	Qual	LCSD %Recovery	Qual	%Recovery Limits	RPD	Qual	RPD Limits
MCP Semivolatile Organics - Westborough Lab Associated sample(s): 02,04,06,08 Batch: WG1140635-2 WG1140635-3								
Di-n-butylphthalate	72		82		40-140	13		30
Di-n-octylphthalate	78		87		40-140	11		30
Diethyl phthalate	74		85		40-140	14		30
Dimethyl phthalate	76		85		40-140	11		30
Benzo(a)anthracene	72		82		40-140	13		30
Benzo(a)pyrene	80		91		40-140	13		30
Benzo(b)fluoranthene	78		90		40-140	14		30
Benzo(k)fluoranthene	75		87		40-140	15		30
Chrysene	74		84		40-140	13		30
Acenaphthylene	75		82		40-140	9		30
Anthracene	72		84		40-140	15		30
Benzo(ghi)perylene	75		87		40-140	15		30
Fluorene	74		85		40-140	14		30
Phenanthrene	71		82		40-140	14		30
Dibenzo(a,h)anthracene	77		86		40-140	11		30
Indeno(1,2,3-cd)pyrene	76		88		40-140	15		30
Pyrene	73		86		40-140	16		30
Aniline	53		49		40-140	8		30
4-Chloroaniline	73		64		40-140	13		30
Dibenzofuran	72		83		40-140	14		30
2-Methylnaphthalene	71		79		40-140	11		30
Acetophenone	74		81		40-140	9		30
2,4,6-Trichlorophenol	78		88		30-130	12		30

Lab Control Sample Analysis
Batch Quality Control

Project Name: 6473 FULLER MIDDLE
Project Number: 6473

Lab Number: L1828859
Report Date: 08/01/18

Parameter	LCS %Recovery	Qual	LCSD %Recovery	Qual	%Recovery Limits	RPD	Qual	RPD Limits
MCP Semivolatile Organics - Westborough Lab Associated sample(s): 02,04,06,08 Batch: WG1140635-2 WG1140635-3								
2-Chlorophenol	73		76		30-130	4		30
2,4-Dichlorophenol	77		84		30-130	9		30
2,4-Dimethylphenol	77		84		30-130	9		30
2-Nitrophenol	71		76		30-130	7		30
4-Nitrophenol	83		101		30-130	20		30
2,4-Dinitrophenol	63		71		30-130	12		30
Pentachlorophenol	72		85		30-130	17		30
Phenol	72		81		30-130	12		30
2-Methylphenol	73		84		30-130	14		30
3-Methylphenol/4-Methylphenol	75		85		30-130	13		30
2,4,5-Trichlorophenol	78		87		30-130	11		30
Pyridine	57		58		30-130	2		30

Surrogate	LCS %Recovery	Qual	LCSD %Recovery	Qual	Acceptance Criteria
2-Fluorophenol	74		79		30-130
Phenol-d6	79		83		30-130
Nitrobenzene-d5	74		79		30-130
2-Fluorobiphenyl	72		80		30-130
2,4,6-Tribromophenol	76		89		30-130
4-Terphenyl-d14	71		85		30-130

PETROLEUM HYDROCARBONS

Project Name: 6473 FULLER MIDDLE
Project Number: 6473

Lab Number: L1828859
Report Date: 08/01/18

SAMPLE RESULTS

Lab ID: L1828859-02
Client ID: B-205 0-4.5 FILL
Sample Location: FRAMINGHAM, MA

Date Collected: 07/26/18 10:15
Date Received: 07/26/18
Field Prep: Not Specified

Sample Depth: 0-4.5
Matrix: Fill
Analytical Method: 1,8015D(M)
Analytical Date: 07/31/18 22:39
Analyst: MEO
Percent Solids: 86%

Extraction Method: EPA 3546
Extraction Date: 07/28/18 19:57

Parameter	Result	Qualifier	Units	RL	MDL	Dilution Factor
Petroleum Hydrocarbon Quantitation - Westborough Lab						
TPH	ND		ug/kg	38200	--	1

Surrogate	% Recovery	Qualifier	Acceptance Criteria
o-Terphenyl	74		40-140

Project Name: 6473 FULLER MIDDLE
Project Number: 6473

Lab Number: L1828859
Report Date: 08/01/18

SAMPLE RESULTS

Lab ID: L1828859-04
Client ID: B-204 0-4 FILL
Sample Location: FRAMINGHAM, MA

Date Collected: 07/26/18 08:00
Date Received: 07/26/18
Field Prep: Not Specified

Sample Depth: 0-4
Matrix: Fill
Analytical Method: 1,8015D(M)
Analytical Date: 07/30/18 17:03
Analyst: MEO
Percent Solids: 90%

Extraction Method: EPA 3546
Extraction Date: 07/28/18 19:57

Parameter	Result	Qualifier	Units	RL	MDL	Dilution Factor
Petroleum Hydrocarbon Quantitation - Westborough Lab						
TPH	ND		ug/kg	36200	--	1

Surrogate	% Recovery	Qualifier	Acceptance Criteria
o-Terphenyl	74		40-140

Project Name: 6473 FULLER MIDDLE
Project Number: 6473
Lab Number: L1828859
Report Date: 08/01/18

SAMPLE RESULTS

Lab ID: L1828859-06
Client ID: B-201 0.5-5 FILL
Sample Location: FRAMINGHAM, MA

Date Collected: 07/26/18 12:00
Date Received: 07/26/18
Field Prep: Not Specified

Sample Depth: 0.5-5
Matrix: Fill
Analytical Method: 1,8015D(M)
Analytical Date: 07/30/18 17:35
Analyst: MEO
Percent Solids: 90%

Extraction Method: EPA 3546
Extraction Date: 07/28/18 19:57

Parameter	Result	Qualifier	Units	RL	MDL	Dilution Factor
Petroleum Hydrocarbon Quantitation - Westborough Lab						
TPH	ND		ug/kg	36200	--	1

Surrogate	% Recovery	Qualifier	Acceptance Criteria
o-Terphenyl	73		40-140

Project Name: 6473 FULLER MIDDLE
Project Number: 6473
Lab Number: L1828859
Report Date: 08/01/18

SAMPLE RESULTS

Lab ID: L1828859-08
Client ID: B-203 0.4-3.5 FILL
Sample Location: FRAMINGHAM, MA

Sample Depth: 0.4-3.5
Matrix: Fill
Analytical Method: 1,8015D(M)
Analytical Date: 07/30/18 18:08
Analyst: MEO
Percent Solids: 95%

Date Collected: 07/26/18 14:15
Date Received: 07/26/18
Field Prep: Not Specified

Extraction Method: EPA 3546
Extraction Date: 07/28/18 19:57

Parameter	Result	Qualifier	Units	RL	MDL	Dilution Factor
Petroleum Hydrocarbon Quantitation - Westborough Lab						
TPH	ND		ug/kg	34400	--	1

Surrogate	% Recovery	Qualifier	Acceptance Criteria
o-Terphenyl	77		40-140

Project Name: 6473 FULLER MIDDLE
Project Number: 6473

Lab Number: L1828859
Report Date: 08/01/18

Method Blank Analysis
Batch Quality Control

Analytical Method: 1,8015D(M)
Analytical Date: 07/31/18 17:45
Analyst: MEO

Extraction Method: EPA 3546
Extraction Date: 07/28/18 19:57

Parameter	Result	Qualifier	Units	RL	MDL
Petroleum Hydrocarbon Quantitation - Westborough Lab for sample(s): 02,04,06,08 Batch: WG1140619-1					
TPH	ND		ug/kg	32600	--

Surrogate	%Recovery	Qualifier	Acceptance Criteria
o-Terphenyl	79		40-140

Lab Control Sample Analysis
Batch Quality Control

Project Name: 6473 FULLER MIDDLE
Project Number: 6473

Lab Number: L1828859
Report Date: 08/01/18

Parameter	LCS %Recovery	Qual	LCSD %Recovery	Qual	%Recovery Limits	RPD	Qual	RPD Limits
Petroleum Hydrocarbon Quantitation - Westborough Lab Associated sample(s): 02,04,06,08 Batch: WG1140619-2								
TPH	80		-		40-140	-		40

Surrogate	LCS %Recovery	Qual	LCSD %Recovery	Qual	Acceptance Criteria
o-Terphenyl	79				40-140

PCBS

Project Name: 6473 FULLER MIDDLE
Project Number: 6473
Lab Number: L1828859
Report Date: 08/01/18

SAMPLE RESULTS

Lab ID: L1828859-02
Client ID: B-205 0-4.5 FILL
Sample Location: FRAMINGHAM, MA

Sample Depth: 0-4.5
Matrix: Fill
Analytical Method: 97,8082A
Analytical Date: 07/31/18 13:44
Analyst: HT
Percent Solids: 86%

Date Collected: 07/26/18 10:15
Date Received: 07/26/18
Field Prep: Not Specified

Extraction Method: EPA 3546
Extraction Date: 07/28/18 21:22
Cleanup Method: EPA 3665A
Cleanup Date: 07/29/18
Cleanup Method: EPA 3660B
Cleanup Date: 07/30/18

Parameter	Result	Qualifier	Units	RL	MDL	Dilution Factor	Column
MCP Polychlorinated Biphenyls - Westborough Lab							
Aroclor 1016	ND		ug/kg	36.6	--	1	A
Aroclor 1221	ND		ug/kg	36.6	--	1	A
Aroclor 1232	ND		ug/kg	36.6	--	1	A
Aroclor 1242	ND		ug/kg	36.6	--	1	A
Aroclor 1248	ND		ug/kg	36.6	--	1	A
Aroclor 1254	ND		ug/kg	36.6	--	1	A
Aroclor 1260	ND		ug/kg	36.6	--	1	A
Aroclor 1262	ND		ug/kg	36.6	--	1	A
Aroclor 1268	ND		ug/kg	36.6	--	1	A
PCBs, Total	ND		ug/kg	36.6	--	1	A

Surrogate	% Recovery	Qualifier	Acceptance Criteria	Column
2,4,5,6-Tetrachloro-m-xylene	67		30-150	A
Decachlorobiphenyl	58		30-150	A
2,4,5,6-Tetrachloro-m-xylene	69		30-150	B
Decachlorobiphenyl	71		30-150	B

Project Name: 6473 FULLER MIDDLE
Project Number: 6473
Lab Number: L1828859
Report Date: 08/01/18

SAMPLE RESULTS

Lab ID: L1828859-04
Client ID: B-204 0-4 FILL
Sample Location: FRAMINGHAM, MA

Sample Depth: 0-4
Matrix: Fill
Analytical Method: 97,8082A
Analytical Date: 07/31/18 13:57
Analyst: HT
Percent Solids: 90%

Date Collected: 07/26/18 08:00
Date Received: 07/26/18
Field Prep: Not Specified

Extraction Method: EPA 3546
Extraction Date: 07/28/18 21:22
Cleanup Method: EPA 3665A
Cleanup Date: 07/29/18
Cleanup Method: EPA 3660B
Cleanup Date: 07/30/18

Parameter	Result	Qualifier	Units	RL	MDL	Dilution Factor	Column
MCP Polychlorinated Biphenyls - Westborough Lab							
Aroclor 1016	ND		ug/kg	36.2	--	1	A
Aroclor 1221	ND		ug/kg	36.2	--	1	A
Aroclor 1232	ND		ug/kg	36.2	--	1	A
Aroclor 1242	ND		ug/kg	36.2	--	1	A
Aroclor 1248	ND		ug/kg	36.2	--	1	A
Aroclor 1254	ND		ug/kg	36.2	--	1	A
Aroclor 1260	ND		ug/kg	36.2	--	1	A
Aroclor 1262	ND		ug/kg	36.2	--	1	A
Aroclor 1268	ND		ug/kg	36.2	--	1	A
PCBs, Total	ND		ug/kg	36.2	--	1	A

Surrogate	% Recovery	Qualifier	Acceptance Criteria	Column
2,4,5,6-Tetrachloro-m-xylene	70		30-150	A
Decachlorobiphenyl	59		30-150	A
2,4,5,6-Tetrachloro-m-xylene	71		30-150	B
Decachlorobiphenyl	74		30-150	B

Project Name: 6473 FULLER MIDDLE
Project Number: 6473
Lab Number: L1828859
Report Date: 08/01/18

SAMPLE RESULTS

Lab ID: L1828859-06
Client ID: B-201 0.5-5 FILL
Sample Location: FRAMINGHAM, MA

Date Collected: 07/26/18 12:00
Date Received: 07/26/18
Field Prep: Not Specified

Sample Depth: 0.5-5
Matrix: Fill
Analytical Method: 97,8082A
Analytical Date: 07/31/18 18:01
Analyst: HT
Percent Solids: 90%

Extraction Method: EPA 3546
Extraction Date: 07/28/18 21:22
Cleanup Method: EPA 3665A
Cleanup Date: 07/29/18
Cleanup Method: EPA 3660B
Cleanup Date: 07/30/18

Parameter	Result	Qualifier	Units	RL	MDL	Dilution Factor	Column
MCP Polychlorinated Biphenyls - Westborough Lab							
Aroclor 1016	ND		ug/kg	35.2	--	1	A
Aroclor 1221	ND		ug/kg	35.2	--	1	A
Aroclor 1232	ND		ug/kg	35.2	--	1	A
Aroclor 1242	ND		ug/kg	35.2	--	1	A
Aroclor 1248	ND		ug/kg	35.2	--	1	A
Aroclor 1254	ND		ug/kg	35.2	--	1	A
Aroclor 1260	ND		ug/kg	35.2	--	1	A
Aroclor 1262	ND		ug/kg	35.2	--	1	A
Aroclor 1268	ND		ug/kg	35.2	--	1	A
PCBs, Total	ND		ug/kg	35.2	--	1	A

Surrogate	% Recovery	Qualifier	Acceptance Criteria	Column
2,4,5,6-Tetrachloro-m-xylene	72		30-150	A
Decachlorobiphenyl	66		30-150	A
2,4,5,6-Tetrachloro-m-xylene	74		30-150	B
Decachlorobiphenyl	68		30-150	B

Project Name: 6473 FULLER MIDDLE
Project Number: 6473
Lab Number: L1828859
Report Date: 08/01/18

SAMPLE RESULTS

Lab ID: L1828859-08
Client ID: B-203 0.4-3.5 FILL
Sample Location: FRAMINGHAM, MA

Sample Depth: 0.4-3.5
Matrix: Fill
Analytical Method: 97,8082A
Analytical Date: 07/31/18 18:13
Analyst: HT
Percent Solids: 95%

Date Collected: 07/26/18 14:15
Date Received: 07/26/18
Field Prep: Not Specified

Extraction Method: EPA 3546
Extraction Date: 07/28/18 21:22
Cleanup Method: EPA 3665A
Cleanup Date: 07/29/18
Cleanup Method: EPA 3660B
Cleanup Date: 07/30/18

Parameter	Result	Qualifier	Units	RL	MDL	Dilution Factor	Column
MCP Polychlorinated Biphenyls - Westborough Lab							
Aroclor 1016	ND		ug/kg	34.8	--	1	A
Aroclor 1221	ND		ug/kg	34.8	--	1	A
Aroclor 1232	ND		ug/kg	34.8	--	1	A
Aroclor 1242	ND		ug/kg	34.8	--	1	A
Aroclor 1248	ND		ug/kg	34.8	--	1	A
Aroclor 1254	ND		ug/kg	34.8	--	1	A
Aroclor 1260	ND		ug/kg	34.8	--	1	A
Aroclor 1262	ND		ug/kg	34.8	--	1	A
Aroclor 1268	ND		ug/kg	34.8	--	1	A
PCBs, Total	ND		ug/kg	34.8	--	1	A

Surrogate	% Recovery	Qualifier	Acceptance Criteria	Column
2,4,5,6-Tetrachloro-m-xylene	72		30-150	A
Decachlorobiphenyl	65		30-150	A
2,4,5,6-Tetrachloro-m-xylene	75		30-150	B
Decachlorobiphenyl	68		30-150	B

Project Name: 6473 FULLER MIDDLE
Project Number: 6473

Lab Number: L1828859
Report Date: 08/01/18

Method Blank Analysis
Batch Quality Control

Analytical Method: 97,8082A
Analytical Date: 07/31/18 12:36
Analyst: HT

Extraction Method: EPA 3546
Extraction Date: 07/28/18 21:22
Cleanup Method: EPA 3665A
Cleanup Date: 07/29/18
Cleanup Method: EPA 3660B
Cleanup Date: 07/30/18

Parameter	Result	Qualifier	Units	RL	MDL	Column
MCP Polychlorinated Biphenyls - Westborough Lab for sample(s): 02,04,06,08 Batch: WG1140625-1						
Aroclor 1016	ND		ug/kg	31.4	--	A
Aroclor 1221	ND		ug/kg	31.4	--	A
Aroclor 1232	ND		ug/kg	31.4	--	A
Aroclor 1242	ND		ug/kg	31.4	--	A
Aroclor 1248	ND		ug/kg	31.4	--	A
Aroclor 1254	ND		ug/kg	31.4	--	A
Aroclor 1260	ND		ug/kg	31.4	--	A
Aroclor 1262	ND		ug/kg	31.4	--	A
Aroclor 1268	ND		ug/kg	31.4	--	A
PCBs, Total	ND		ug/kg	31.4	--	A

Surrogate	%Recovery	Qualifier	Acceptance Criteria	Column
2,4,5,6-Tetrachloro-m-xylene	70		30-150	A
Decachlorobiphenyl	59		30-150	A
2,4,5,6-Tetrachloro-m-xylene	72		30-150	B
Decachlorobiphenyl	75		30-150	B

Lab Control Sample Analysis
Batch Quality Control

Project Name: 6473 FULLER MIDDLE
Project Number: 6473
Lab Number: L1828859
Report Date: 08/01/18

Parameter	LCS %Recovery	Qual	LCSD %Recovery	Qual	%Recovery Limits	RPD	Qual	RPD Limits	Column
MCP Polychlorinated Biphenyls - Westborough Lab Associated sample(s): 02,04,06,08 Batch: WG1140625-2 WG1140625-3									
Aroclor 1016	76		72		40-140	5		30	A
Aroclor 1260	63		62		40-140	2		30	A

Surrogate	LCS %Recovery	Qual	LCSD %Recovery	Qual	Acceptance Criteria	Column
2,4,5,6-Tetrachloro-m-xylene	68		66		30-150	A
Decachlorobiphenyl	59		58		30-150	A
2,4,5,6-Tetrachloro-m-xylene	70		66		30-150	B
Decachlorobiphenyl	69		65		30-150	B

METALS

Project Name: 6473 FULLER MIDDLE
Lab Number: L1828859
Project Number: 6473
Report Date: 08/01/18

SAMPLE RESULTS

Lab ID: L1828859-02
Client ID: B-205 0-4.5 FILL
Sample Location: FRAMINGHAM, MA

Date Collected: 07/26/18 10:15
Date Received: 07/26/18
Field Prep: Not Specified

Sample Depth: 0-4.5
Matrix: Fill
Percent Solids: 86%

Parameter	Result	Qualifier	Units	RL	MDL	Dilution Factor	Date Prepared	Date Analyzed	Prep Method	Analytical Method	Analyst
MCP Total Metals - Mansfield Lab											
Arsenic, Total	7.72		mg/kg	0.452	--	1	08/01/18 09:40	08/01/18 14:41	EPA 3050B	97,6010D	PE
Barium, Total	22.4		mg/kg	0.452	--	1	08/01/18 09:40	08/01/18 14:41	EPA 3050B	97,6010D	PE
Cadmium, Total	ND		mg/kg	0.452	--	1	08/01/18 09:40	08/01/18 14:41	EPA 3050B	97,6010D	PE
Chromium, Total	10.7		mg/kg	0.452	--	1	08/01/18 09:40	08/01/18 14:41	EPA 3050B	97,6010D	PE
Lead, Total	4.40		mg/kg	2.26	--	1	08/01/18 09:40	08/01/18 14:41	EPA 3050B	97,6010D	PE
Mercury, Total	ND		mg/kg	0.074	--	1	07/30/18 10:30	07/30/18 16:07	EPA 7471B	97,7471B	MG
Selenium, Total	ND		mg/kg	2.26	--	1	08/01/18 09:40	08/01/18 14:41	EPA 3050B	97,6010D	PE
Silver, Total	ND		mg/kg	0.452	--	1	08/01/18 09:40	08/01/18 14:41	EPA 3050B	97,6010D	PE

Project Name: 6473 FULLER MIDDLE
Project Number: 6473
Lab Number: L1828859
Report Date: 08/01/18

SAMPLE RESULTS

Lab ID: L1828859-04
Client ID: B-204 0-4 FILL
Sample Location: FRAMINGHAM, MA

Date Collected: 07/26/18 08:00
Date Received: 07/26/18
Field Prep: Not Specified

Sample Depth: 0-4
Matrix: Fill
Percent Solids: 90%

Parameter	Result	Qualifier	Units	RL	MDL	Dilution Factor	Date Prepared	Date Analyzed	Prep Method	Analytical Method	Analyst
MCP Total Metals - Mansfield Lab											
Arsenic, Total	4.37		mg/kg	0.435	--	1	08/01/18 09:40	08/01/18 14:45	EPA 3050B	97,6010D	PE
Barium, Total	19.6		mg/kg	0.435	--	1	08/01/18 09:40	08/01/18 14:45	EPA 3050B	97,6010D	PE
Cadmium, Total	ND		mg/kg	0.435	--	1	08/01/18 09:40	08/01/18 14:45	EPA 3050B	97,6010D	PE
Chromium, Total	15.2		mg/kg	0.435	--	1	08/01/18 09:40	08/01/18 14:45	EPA 3050B	97,6010D	PE
Lead, Total	4.28		mg/kg	2.18	--	1	08/01/18 09:40	08/01/18 14:45	EPA 3050B	97,6010D	PE
Mercury, Total	ND		mg/kg	0.070	--	1	07/30/18 10:30	07/30/18 16:09	EPA 7471B	97,7471B	MG
Selenium, Total	ND		mg/kg	2.18	--	1	08/01/18 09:40	08/01/18 14:45	EPA 3050B	97,6010D	PE
Silver, Total	ND		mg/kg	0.435	--	1	08/01/18 09:40	08/01/18 14:45	EPA 3050B	97,6010D	PE

Project Name: 6473 FULLER MIDDLE
Project Number: 6473
Lab Number: L1828859
Report Date: 08/01/18

SAMPLE RESULTS

Lab ID: L1828859-06
Client ID: B-201 0.5-5 FILL
Sample Location: FRAMINGHAM, MA

Date Collected: 07/26/18 12:00
Date Received: 07/26/18
Field Prep: Not Specified

Sample Depth: 0.5-5
Matrix: Fill
Percent Solids: 90%

Parameter	Result	Qualifier	Units	RL	MDL	Dilution Factor	Date Prepared	Date Analyzed	Prep Method	Analytical Method	Analyst
MCP Total Metals - Mansfield Lab											
Arsenic, Total	8.15		mg/kg	0.422	--	1	08/01/18 09:40	08/01/18 14:50	EPA 3050B	97,6010D	PE
Barium, Total	27.4		mg/kg	0.422	--	1	08/01/18 09:40	08/01/18 14:50	EPA 3050B	97,6010D	PE
Cadmium, Total	ND		mg/kg	0.422	--	1	08/01/18 09:40	08/01/18 14:50	EPA 3050B	97,6010D	PE
Chromium, Total	10.8		mg/kg	0.422	--	1	08/01/18 09:40	08/01/18 14:50	EPA 3050B	97,6010D	PE
Lead, Total	2.99		mg/kg	2.11	--	1	08/01/18 09:40	08/01/18 14:50	EPA 3050B	97,6010D	PE
Mercury, Total	ND		mg/kg	0.070	--	1	07/30/18 10:30	07/30/18 16:11	EPA 7471B	97,7471B	MG
Selenium, Total	ND		mg/kg	2.11	--	1	08/01/18 09:40	08/01/18 14:50	EPA 3050B	97,6010D	PE
Silver, Total	ND		mg/kg	0.422	--	1	08/01/18 09:40	08/01/18 14:50	EPA 3050B	97,6010D	PE

Project Name: 6473 FULLER MIDDLE
Project Number: 6473
Lab Number: L1828859
Report Date: 08/01/18

SAMPLE RESULTS

Lab ID: L1828859-08
Client ID: B-203 0.4-3.5 FILL
Sample Location: FRAMINGHAM, MA

Date Collected: 07/26/18 14:15
Date Received: 07/26/18
Field Prep: Not Specified

Sample Depth: 0.4-3.5
Matrix: Fill
Percent Solids: 95%

Parameter	Result	Qualifier	Units	RL	MDL	Dilution Factor	Date Prepared	Date Analyzed	Prep Method	Analytical Method	Analyst
MCP Total Metals - Mansfield Lab											
Arsenic, Total	2.85		mg/kg	0.420	--	1	08/01/18 09:40	08/01/18 14:54	EPA 3050B	97,6010D	PE
Barium, Total	35.6		mg/kg	0.420	--	1	08/01/18 09:40	08/01/18 14:54	EPA 3050B	97,6010D	PE
Cadmium, Total	ND		mg/kg	0.420	--	1	08/01/18 09:40	08/01/18 14:54	EPA 3050B	97,6010D	PE
Chromium, Total	18.0		mg/kg	0.420	--	1	08/01/18 09:40	08/01/18 14:54	EPA 3050B	97,6010D	PE
Lead, Total	5.56		mg/kg	2.10	--	1	08/01/18 09:40	08/01/18 14:54	EPA 3050B	97,6010D	PE
Mercury, Total	ND		mg/kg	0.066	--	1	07/30/18 10:30	07/30/18 16:12	EPA 7471B	97,7471B	MG
Selenium, Total	ND		mg/kg	2.10	--	1	08/01/18 09:40	08/01/18 14:54	EPA 3050B	97,6010D	PE
Silver, Total	ND		mg/kg	0.420	--	1	08/01/18 09:40	08/01/18 14:54	EPA 3050B	97,6010D	PE

Project Name: 6473 FULLER MIDDLE **Lab Number:** L1828859

Project Number: 6473 **Report Date:** 08/01/18

Method Blank Analysis
Batch Quality Control

Parameter	Result	Qualifier	Units	RL	MDL	Dilution Factor	Date Prepared	Date Analyzed	Analytical Method	Analyst
MCP Total Metals - Mansfield Lab for sample(s): 02,04,06,08 Batch: WG1140836-1										
Mercury, Total	ND		mg/kg	0.083	--	1	07/30/18 10:30	07/30/18 15:42	97,7471B	MG

Prep Information

Digestion Method: EPA 7471B

Parameter	Result	Qualifier	Units	RL	MDL	Dilution Factor	Date Prepared	Date Analyzed	Analytical Method	Analyst
MCP Total Metals - Mansfield Lab for sample(s): 02,04,06,08 Batch: WG1141580-1										
Arsenic, Total	ND		mg/kg	0.400	--	1	08/01/18 09:40	08/01/18 13:20	97,6010D	PE
Barium, Total	ND		mg/kg	0.400	--	1	08/01/18 09:40	08/01/18 13:20	97,6010D	PE
Cadmium, Total	ND		mg/kg	0.400	--	1	08/01/18 09:40	08/01/18 13:20	97,6010D	PE
Chromium, Total	ND		mg/kg	0.400	--	1	08/01/18 09:40	08/01/18 13:20	97,6010D	PE
Lead, Total	ND		mg/kg	2.00	--	1	08/01/18 09:40	08/01/18 13:20	97,6010D	PE
Selenium, Total	ND		mg/kg	2.00	--	1	08/01/18 09:40	08/01/18 13:20	97,6010D	PE
Silver, Total	ND		mg/kg	0.400	--	1	08/01/18 09:40	08/01/18 13:20	97,6010D	PE

Prep Information

Digestion Method: EPA 3050B

Lab Control Sample Analysis
Batch Quality Control

Project Name: 6473 FULLER MIDDLE
Project Number: 6473

Lab Number: L1828859
Report Date: 08/01/18

Parameter	LCS %Recovery	Qual	LCSD %Recovery	Qual	%Recovery Limits	RPD	Qual	RPD Limits
MCP Total Metals - Mansfield Lab Associated sample(s): 02,04,06,08 Batch: WG1140836-2 WG1140836-3 SRM Lot Number: D098-540								
Mercury, Total	120		107		50-149	11		30
MCP Total Metals - Mansfield Lab Associated sample(s): 02,04,06,08 Batch: WG1141580-2 WG1141580-3 SRM Lot Number: D098-540								
Arsenic, Total	107		108		83-117	1		30
Barium, Total	97		105		82-118	8		30
Cadmium, Total	101		112		82-117	10		30
Chromium, Total	101		102		83-119	1		30
Lead, Total	103		103		82-117	0		30
Selenium, Total	109		112		78-121	3		30
Silver, Total	109		109		80-120	0		30

INORGANICS
&
MISCELLANEOUS

Project Name: 6473 FULLER MIDDLE
Project Number: 6473

Lab Number: L1828859
Report Date: 08/01/18

SAMPLE RESULTS

Lab ID: L1828859-02
Client ID: B-205 0-4.5 FILL
Sample Location: FRAMINGHAM, MA

Date Collected: 07/26/18 10:15
Date Received: 07/26/18
Field Prep: Not Specified

Sample Depth: 0-4.5
Matrix: Fill

Test Material Information

Source of Material: Unknown
Description of Material: Non-Metallic - Damp Soil
Particle Size: Medium
Preliminary Burning Time (sec): 120

Parameter	Result	Date Analyzed	Analytical Method	Analyst
Ignitability of Solids - Westborough Lab				
Ignitability	NI	07/28/18 06:30	1,1030	GD

Project Name:	6473 FULLER MIDDLE	**Lab Number:**	L1828859
Project Number:	6473	**Report Date:**	08/01/18

SAMPLE RESULTS

Lab ID:	L1828859-04	Date Collected:	07/26/18 08:00
Client ID:	B-204 0-4 FILL	Date Received:	07/26/18
Sample Location:	FRAMINGHAM, MA	Field Prep:	Not Specified
Sample Depth:	0-4		
Matrix:	Fill		

Test Material Information

Source of Material:	Unknown
Description of Material:	Non-Metallic - Damp Soil
Particle Size:	Medium
Preliminary Burning Time (sec):	120

Parameter	Result	Date Analyzed	Analytical Method	Analyst
Ignitability of Solids - Westborough Lab				
Ignitability	NI	07/28/18 06:30	1,1030	GD

Project Name: 6473 FULLER MIDDLE
Project Number: 6473

Lab Number: L1828859
Report Date: 08/01/18

SAMPLE RESULTS

Lab ID: L1828859-06
Client ID: B-201 0.5-5 FILL
Sample Location: FRAMINGHAM, MA

Date Collected: 07/26/18 12:00
Date Received: 07/26/18
Field Prep: Not Specified

Sample Depth: 0.5-5
Matrix: Fill

Test Material Information

Source of Material: Unknown
Description of Material: Non-Metallic - Damp Soil
Particle Size: Fine
Preliminary Burning Time (sec): 120

Parameter	Result	Date Analyzed	Analytical Method	Analyst
Ignitability of Solids - Westborough Lab				
Ignitability	NI	07/28/18 06:30	1,1030	GD

Project Name: 6473 FULLER MIDDLE
Project Number: 6473

Lab Number: L1828859
Report Date: 08/01/18

SAMPLE RESULTS

Lab ID: L1828859-08
Client ID: B-203 0.4-3.5 FILL
Sample Location: FRAMINGHAM, MA

Date Collected: 07/26/18 14:15
Date Received: 07/26/18
Field Prep: Not Specified

Sample Depth: 0.4-3.5
Matrix: Fill

Test Material Information

Source of Material: Unknown
Description of Material: Non-Metallic - Damp Soil
Particle Size: Medium
Preliminary Burning Time (sec): 120

Parameter	Result	Date Analyzed	Analytical Method	Analyst
Ignitability of Solids - Westborough Lab				
Ignitability	NI	07/28/18 06:30	1,1030	GD

Project Name: 6473 FULLER MIDDLE
Project Number: 6473

Lab Number: L1828859
Report Date: 08/01/18

SAMPLE RESULTS

Lab ID: L1828859-01
Client ID: B-205, S-2 2-4
Sample Location: FRAMINGHAM, MA

Date Collected: 07/26/18 10:15
Date Received: 07/26/18
Field Prep: Not Specified

Sample Depth: 2-4
Matrix: Fill

Parameter	Result	Qualifier	Units	RL	MDL	Dilution Factor	Date Prepared	Date Analyzed	Analytical Method	Analyst
General Chemistry - Westborough Lab										
Solids, Total	85.6		%	0.100	NA	1	-	07/28/18 09:41	121,2540G	RI

Project Name: 6473 FULLER MIDDLE
Project Number: 6473

Lab Number: L1828859
Report Date: 08/01/18

SAMPLE RESULTS

Lab ID: L1828859-02
Client ID: B-205 0-4.5 FILL
Sample Location: FRAMINGHAM, MA

Date Collected: 07/26/18 10:15
Date Received: 07/26/18
Field Prep: Not Specified

Sample Depth: 0-4.5
Matrix: Fill

Parameter	Result	Qualifier	Units	RL	MDL	Dilution Factor	Date Prepared	Date Analyzed	Analytical Method	Analyst
General Chemistry - Westborough Lab										
Specific Conductance @ 25 C	14		umhos/cm	10	--	1	-	07/27/18 08:30	1,9050A	UN
Solids, Total	86.2		%	0.100	NA	1	-	07/28/18 09:41	121,2540G	RI
pH (H)	7.2		SU	-	NA	1	-	07/27/18 08:30	1,9045D	UN
Cyanide, Reactive	ND		mg/kg	10	--	1	07/29/18 13:08	07/29/18 14:57	125,7.3	RM
Sulfide, Reactive	ND		mg/kg	10	--	1	07/29/18 13:08	07/29/18 14:36	125,7.3	RM

Project Name: 6473 FULLER MIDDLE
Project Number: 6473

Lab Number: L1828859
Report Date: 08/01/18

SAMPLE RESULTS

Lab ID: L1828859-03
Client ID: B-204, S-2 2.4'
Sample Location: FRAMINGHAM, MA

Date Collected: 07/26/18 08:00
Date Received: 07/26/18
Field Prep: Not Specified

Sample Depth: 2-4
Matrix: Fill

Parameter	Result	Qualifier	Units	RL	MDL	Dilution Factor	Date Prepared	Date Analyzed	Analytical Method	Analyst
General Chemistry - Westborough Lab										
Solids, Total	87.3		%	0.100	NA	1	-	07/28/18 09:41	121,2540G	RI

Project Name: 6473 FULLER MIDDLE
Project Number: 6473

Lab Number: L1828859
Report Date: 08/01/18

SAMPLE RESULTS

Lab ID: L1828859-04
Client ID: B-204 0-4 FILL
Sample Location: FRAMINGHAM, MA

Date Collected: 07/26/18 08:00
Date Received: 07/26/18
Field Prep: Not Specified

Sample Depth: 0-4
Matrix: Fill

Parameter	Result	Qualifier	Units	RL	MDL	Dilution Factor	Date Prepared	Date Analyzed	Analytical Method	Analyst
General Chemistry - Westborough Lab										
Specific Conductance @ 25 C	23		umhos/cm	10	--	1	-	07/27/18 08:30	1,9050A	UN
Solids, Total	89.5		%	0.100	NA	1	-	07/28/18 09:41	121,2540G	RI
pH (H)	7.1		SU	-	NA	1	-	07/27/18 08:30	1,9045D	UN
Cyanide, Reactive	ND		mg/kg	10	--	1	07/29/18 13:08	07/29/18 14:58	125,7.3	RM
Sulfide, Reactive	ND		mg/kg	10	--	1	07/29/18 13:08	07/29/18 14:36	125,7.3	RM

Project Name: 6473 FULLER MIDDLE
Project Number: 6473

Lab Number: L1828859
Report Date: 08/01/18

SAMPLE RESULTS

Lab ID: L1828859-05
Client ID: B-201, S-1 0.5-2'
Sample Location: FRAMINGHAM, MA

Date Collected: 07/26/18 12:00
Date Received: 07/26/18
Field Prep: Not Specified

Sample Depth: 0.5-2
Matrix: Fill

Parameter	Result	Qualifier	Units	RL	MDL	Dilution Factor	Date Prepared	Date Analyzed	Analytical Method	Analyst
General Chemistry - Westborough Lab										
Solids, Total	94.0		%	0.100	NA	1	-	07/28/18 09:41	121,2540G	RI

Project Name: 6473 FULLER MIDDLE
Project Number: 6473

Lab Number: L1828859
Report Date: 08/01/18

SAMPLE RESULTS

Lab ID: L1828859-06
Client ID: B-201 0.5-5 FILL
Sample Location: FRAMINGHAM, MA

Date Collected: 07/26/18 12:00
Date Received: 07/26/18
Field Prep: Not Specified

Sample Depth: 0.5-5
Matrix: Fill

Parameter	Result	Qualifier	Units	RL	MDL	Dilution Factor	Date Prepared	Date Analyzed	Analytical Method	Analyst
General Chemistry - Westborough Lab										
Specific Conductance @ 25 C	41		umhos/cm	10	--	1	-	07/27/18 08:30	1,9050A	UN
Solids, Total	90.1		%	0.100	NA	1	-	07/28/18 09:41	121,2540G	RI
pH (H)	5.3		SU	-	NA	1	-	07/27/18 08:30	1,9045D	UN
Cyanide, Reactive	ND		mg/kg	10	--	1	07/29/18 13:08	07/29/18 14:58	125,7.3	RM
Sulfide, Reactive	ND		mg/kg	10	--	1	07/29/18 13:08	07/29/18 14:37	125,7.3	RM

Project Name: 6473 FULLER MIDDLE
Project Number: 6473

Lab Number: L1828859
Report Date: 08/01/18

SAMPLE RESULTS

Lab ID: L1828859-07
Client ID: B-203, S-2 2-3.5
Sample Location: FRAMINGHAM, MA

Date Collected: 07/26/18 14:15
Date Received: 07/26/18
Field Prep: Not Specified

Sample Depth: 2-3.5
Matrix: Fill

Parameter	Result	Qualifier	Units	RL	MDL	Dilution Factor	Date Prepared	Date Analyzed	Analytical Method	Analyst
General Chemistry - Westborough Lab										
Solids, Total	93.5		%	0.100	NA	1	-	07/28/18 09:41	121,2540G	RI

Project Name: 6473 FULLER MIDDLE
Project Number: 6473

Lab Number: L1828859
Report Date: 08/01/18

SAMPLE RESULTS

Lab ID: L1828859-08
Client ID: B-203 0.4-3.5 FILL
Sample Location: FRAMINGHAM, MA

Date Collected: 07/26/18 14:15
Date Received: 07/26/18
Field Prep: Not Specified

Sample Depth: 0.4-3.5
Matrix: Fill

Parameter	Result	Qualifier	Units	RL	MDL	Dilution Factor	Date Prepared	Date Analyzed	Analytical Method	Analyst
General Chemistry - Westborough Lab										
Specific Conductance @ 25 C	330		umhos/cm	10	--	1	-	07/27/18 08:30	1,9050A	UN
Solids, Total	94.8		%	0.100	NA	1	-	07/28/18 09:41	121,2540G	RI
pH (H)	6.6		SU	-	NA	1	-	07/27/18 08:30	1,9045D	UN
Cyanide, Reactive	ND		mg/kg	10	--	1	07/29/18 13:08	07/29/18 14:58	125,7.3	RM
Sulfide, Reactive	ND		mg/kg	10	--	1	07/29/18 13:08	07/29/18 14:37	125,7.3	RM

Project Name: 6473 FULLER MIDDLE **Lab Number:** L1828859

Project Number: 6473 **Report Date:** 08/01/18

Method Blank Analysis
Batch Quality Control

Parameter	Result	Qualifier	Units	RL	MDL	Dilution Factor	Date Prepared	Date Analyzed	Analytical Method	Analyst
General Chemistry - Westborough Lab for sample(s): 02,04,06,08 Batch: WG1140685-1										
Sulfide, Reactive	ND		mg/kg	10	--	1	07/29/18 13:08	07/29/18 14:33	125,7.3	RM
General Chemistry - Westborough Lab for sample(s): 02,04,06,08 Batch: WG1140686-1										
Cyanide, Reactive	ND		mg/kg	10	--	1	07/29/18 13:08	07/29/18 14:54	125,7.3	RM

Lab Control Sample Analysis
Batch Quality Control

Project Name: 6473 FULLER MIDDLE
Project Number: 6473

Lab Number: L1828859
Report Date: 08/01/18

Parameter	LCS %Recovery	Qual	LCSD %Recovery	Qual	%Recovery Limits	RPD	Qual	RPD Limits
General Chemistry - Westborough Lab Associated sample(s): 02,04,06,08 Batch: WG1140181-1								
Specific Conductance	99		-		99-101	-		
General Chemistry - Westborough Lab Associated sample(s): 02,04,06,08 Batch: WG1140192-1								
pH	100		-		99-101	-		
General Chemistry - Westborough Lab Associated sample(s): 02,04,06,08 Batch: WG1140685-2								
Sulfide, Reactive	112		-		60-125	-		40
General Chemistry - Westborough Lab Associated sample(s): 02,04,06,08 Batch: WG1140686-2								
Cyanide, Reactive	74		-		30-125	-		40

Lab Duplicate Analysis

Batch Quality Control

Project Name: 6473 FULLER MIDDLE

Project Number: 6473

Lab Number: L1828859

Report Date: 08/01/18

Parameter	Native Sample	Duplicate Sample	Units	RPD	Qual	RPD Limits
General Chemistry - Westborough Lab Associated sample(s): 02,04,06,08 QC Batch ID: WG1140181-2 QC Sample: L1828859-02 Client ID: B-205 0-4.5 FILL						
Specific Conductance @ 25 C	14	14	umhos/cm	0		20
General Chemistry - Westborough Lab Associated sample(s): 01-08 QC Batch ID: WG1140515-1 QC Sample: L1828859-01 Client ID: B-205, S-2 2-4						
Solids, Total	85.6	85.1	%	1		20

Project Name: 6473 FULLER MIDDLE
Project Number: 6473

Lab Number: L1828859
Report Date: 08/01/18

Sample Receipt and Container Information

Were project specific reporting limits specified? YES

Cooler Information

Cooler	Custody Seal
A	Absent

Container Information

Container ID	Container Type	Cooler	Initial pH	Final pH	Temp deg C	Pres	Seal	Frozen Date/Time	Analysis(*)
L1828859-01A	Vial MeOH preserved	A	NA		1.5	Y	Absent		MCP-8260HLW-10(14)
L1828859-01B	Vial water preserved	A	NA		1.5	Y	Absent	27-JUL-18 07:46	MCP-8260HLW-10(14)
L1828859-01C	Vial water preserved	A	NA		1.5	Y	Absent	27-JUL-18 07:46	MCP-8260HLW-10(14)
L1828859-01D	Plastic 2oz unpreserved for TS	A	NA		1.5	Y	Absent		TS(7)
L1828859-02A	Metals Only-Glass 60mL/2oz unpreserved	A	NA		1.5	Y	Absent		MCP-CR-6010T-10(180),MCP-AS-6010T-10(180),MCP-7471T-10(28),MCP-CD-6010T-10(180),MCP-AG-6010T-10(180),MCP-SE-6010T-10(180),MCP-BA-6010T-10(180),MCP-PB-6010T-10(180)
L1828859-02B	Glass 500ml/16oz unpreserved	A	NA		1.5	Y	Absent		IGNIT-1030(14),MCP-8082-10(365),REACTS(14),MCP-8270-10(14),TS(7),PH-9045(1),REACTCN(14),TPH-DRO-D(14),COND-9050(28)
L1828859-03A	Vial MeOH preserved	A	NA		1.5	Y	Absent		MCP-8260HLW-10(14)
L1828859-03B	Vial water preserved	A	NA		1.5	Y	Absent	27-JUL-18 07:46	MCP-8260HLW-10(14)
L1828859-03C	Vial water preserved	A	NA		1.5	Y	Absent	27-JUL-18 07:46	MCP-8260HLW-10(14)
L1828859-03D	Plastic 2oz unpreserved for TS	A	NA		1.5	Y	Absent		TS(7)
L1828859-04A	Metals Only-Glass 60mL/2oz unpreserved	A	NA		1.5	Y	Absent		MCP-CR-6010T-10(180),MCP-AS-6010T-10(180),MCP-7471T-10(28),MCP-CD-6010T-10(180),MCP-AG-6010T-10(180),MCP-SE-6010T-10(180),MCP-BA-6010T-10(180),MCP-PB-6010T-10(180)
L1828859-04B	Glass 500ml/16oz unpreserved	A	NA		1.5	Y	Absent		IGNIT-1030(14),MCP-8082-10(365),REACTS(14),MCP-8270-10(14),TS(7),PH-9045(1),REACTCN(14),TPH-DRO-D(14),COND-9050(28)
L1828859-05A	Vial MeOH preserved	A	NA		1.5	Y	Absent		MCP-8260HLW-10(14)
L1828859-05B	Vial water preserved	A	NA		1.5	Y	Absent	27-JUL-18 07:46	MCP-8260HLW-10(14)
L1828859-05C	Vial water preserved	A	NA		1.5	Y	Absent	27-JUL-18 07:46	MCP-8260HLW-10(14)
L1828859-05D	Plastic 2oz unpreserved for TS	A	NA		1.5	Y	Absent		TS(7)

*Values in parentheses indicate holding time in days

Project Name: 6473 FULLER MIDDLE
Project Number: 6473

Lab Number: L1828859
Report Date: 08/01/18

Container Information

Container ID	Container Type	Cooler	Initial pH	Final pH	Temp deg C	Pres	Seal	Frozen Date/Time	Analysis(*)
L1828859-06A	Metals Only-Glass 60mL/2oz unpreserved	A	NA		1.5	Y	Absent		MCP-CR-6010T-10(180),MCP-AS-6010T-10(180),MCP-7471T-10(28),MCP-CD-6010T-10(180),MCP-AG-6010T-10(180),MCP-SE-6010T-10(180),MCP-BA-6010T-10(180),MCP-PB-6010T-10(180)
L1828859-06B	Glass 500ml/16oz unpreserved	A	NA		1.5	Y	Absent		IGNIT-1030(14),MCP-8082-10(365),REACTS(14),MCP-8270-10(14),TS(7),PH-9045(1),REACTCN(14),TPH-DRO-D(14),COND-9050(28)
L1828859-07A	Vial MeOH preserved	A	NA		1.5	Y	Absent		MCP-8260HLW-10(14)
L1828859-07B	Vial water preserved	A	NA		1.5	Y	Absent	27-JUL-18 07:46	MCP-8260HLW-10(14)
L1828859-07C	Vial water preserved	A	NA		1.5	Y	Absent	27-JUL-18 07:46	MCP-8260HLW-10(14)
L1828859-07D	Plastic 2oz unpreserved for TS	A	NA		1.5	Y	Absent		TS(7)
L1828859-08A	Metals Only-Glass 60mL/2oz unpreserved	A	NA		1.5	Y	Absent		MCP-CR-6010T-10(180),MCP-AS-6010T-10(180),MCP-7471T-10(28),MCP-CD-6010T-10(180),MCP-AG-6010T-10(180),MCP-SE-6010T-10(180),MCP-BA-6010T-10(180),MCP-PB-6010T-10(180)
L1828859-08B	Glass 500ml/16oz unpreserved	A	NA		1.5	Y	Absent		IGNIT-1030(14),MCP-8082-10(365),REACTS(14),MCP-8270-10(14),TS(7),PH-9045(1),REACTCN(14),TPH-DRO-D(14),COND-9050(28)

*Values in parentheses indicate holding time in days

Project Name:	6473 FULLER MIDDLE	**Lab Number:**	L1828859
Project Number:	6473	**Report Date:**	08/01/18

GLOSSARY

Acronyms

EDL	- Estimated Detection Limit: This value represents the level to which target analyte concentrations are reported as estimated values, when those target analyte concentrations are quantified below the reporting limit (RL). The EDL includes any adjustments from dilutions, concentrations or moisture content, where applicable. The use of EDLs is specific to the analysis of PAHs using Solid-Phase Microextraction (SPME).
EMPC	- Estimated Maximum Possible Concentration: The concentration that results from the signal present at the retention time of an analyte when the ions meet all of the identification criteria except the ion abundance ratio criteria. An EMPC is a worst-case estimate of the concentration.
EPA	- Environmental Protection Agency.
LCS	- Laboratory Control Sample: A sample matrix, free from the analytes of interest, spiked with verified known amounts of analytes or a material containing known and verified amounts of analytes.
LCSD	- Laboratory Control Sample Duplicate: Refer to LCS.
LFB	- Laboratory Fortified Blank: A sample matrix, free from the analytes of interest, spiked with verified known amounts of analytes or a material containing known and verified amounts of analytes.
MDL	- Method Detection Limit: This value represents the level to which target analyte concentrations are reported as estimated values, when those target analyte concentrations are quantified below the reporting limit (RL). The MDL includes any adjustments from dilutions, concentrations or moisture content, where applicable.
MS	- Matrix Spike Sample: A sample prepared by adding a known mass of target analyte to a specified amount of matrix sample for which an independent estimate of target analyte concentration is available.
MSD	- Matrix Spike Sample Duplicate: Refer to MS.
NA	- Not Applicable.
NC	- Not Calculated: Term is utilized when one or more of the results utilized in the calculation are non-detect at the parameter's reporting unit.
NDPA/DPA	- N-Nitrosodiphenylamine/Diphenylamine.
NI	- Not Ignitable.
NP	- Non-Plastic: Term is utilized for the analysis of Atterberg Limits in soil.
RL	- Reporting Limit: The value at which an instrument can accurately measure an analyte at a specific concentration. The RL includes any adjustments from dilutions, concentrations or moisture content, where applicable.
RPD	- Relative Percent Difference: The results from matrix and/or matrix spike duplicates are primarily designed to assess the precision of analytical results in a given matrix and are expressed as relative percent difference (RPD). Values which are less than five times the reporting limit for any individual parameter are evaluated by utilizing the absolute difference between the values; although the RPD value will be provided in the report.
SRM	- Standard Reference Material: A reference sample of a known or certified value that is of the same or similar matrix as the associated field samples.
STLP	- Semi-dynamic Tank Leaching Procedure per EPA Method 1315.
TEF	- Toxic Equivalency Factors: The values assigned to each dioxin and furan to evaluate their toxicity relative to 2,3,7,8-TCDD.
TEQ	- Toxic Equivalent: The measure of a sample¿s toxicity derived by multiplying each dioxin and furan by its corresponding TEF and then summing the resulting values.
TIC	- Tentatively Identified Compound: A compound that has been identified to be present and is not part of the target compound list (TCL) for the method and/or program. All TICs are qualitatively identified and reported as estimated concentrations.

Footnotes

1	- The reference for this analyte should be considered modified since this analyte is absent from the target analyte list of the original method.

Terms

Analytical Method: Both the document from which the method originates and the analytical reference method. (Example: EPA 8260B is shown as 1,8260B.) The codes for the reference method documents are provided in the References section of the Addendum.

Final pH: As it pertains to Sample Receipt & Container Information section of the report, Final pH reflects pH of container determined after adjustment at the laboratory, if applicable. If no adjustment required, value reflects Initial pH.

Frozen Date/Time: With respect to Volatile Organics in soil, Frozen Date/Time reflects the date/time at which associated Reagent Water-preserved vials were initially frozen. Note: If frozen date/time is beyond 48 hours from sample collection, value will be reflected in 'bold'.

Initial pH: As it pertains to Sample Receipt & Container Information section of the report, Initial pH reflects pH of container determined upon receipt, if applicable.

Total: With respect to Organic analyses, a 'Total' result is defined as the summation of results for individual isomers or Aroclors. If a 'Total' result is requested, the results of its individual components will also be reported. This is applicable to 'Total' results for methods 8260, 8081 and 8082.

Report Format: Data Usability Report

Project Name:	6473 FULLER MIDDLE	**Lab Number:**	L1828859
Project Number:	6473	**Report Date:**	08/01/18

Data Qualifiers

A - Spectra identified as "Aldol Condensation Product".

B - The analyte was detected above the reporting limit in the associated method blank. Flag only applies to associated field samples that have detectable concentrations of the analyte at less than ten times (10x) the concentration found in the blank. For MCP-related projects, flag only applies to associated field samples that have detectable concentrations of the analyte at less than ten times (10x) the concentration found in the blank. For DOD-related projects, flag only applies to associated field samples that have detectable concentrations of the analyte at less than ten times (10x) the concentration found in the blank AND the analyte was detected above one-half the reporting limit (or above the reporting limit for common lab contaminants) in the associated method blank. For NJ-Air-related projects, flag only applies to associated field samples that have detectable concentrations of the analyte above the reporting limit. For NJ-related projects (excluding Air), flag only applies to associated field samples that have detectable concentrations of the analyte, which was detected above the reporting limit in the associated method blank or above five times the reporting limit for common lab contaminants (Phthalates, Acetone, Methylene Chloride, 2-Butanone).

C - Co-elution: The target analyte co-elutes with a known lab standard (i.e. surrogate, internal standards, etc.) for co-extracted analyses.

D - Concentration of analyte was quantified from diluted analysis. Flag only applies to field samples that have detectable concentrations of the analyte.

E - Concentration of analyte exceeds the range of the calibration curve and/or linear range of the instrument.

G - The concentration may be biased high due to matrix interferences (i.e, co-elution) with non-target compound(s). The result should be considered estimated.

H - The analysis of pH was performed beyond the regulatory-required holding time of 15 minutes from the time of sample collection.

I - The lower value for the two columns has been reported due to obvious interference.

M - Reporting Limit (RL) exceeds the MCP CAM Reporting Limit for this analyte.

NJ - Presumptive evidence of compound. This represents an estimated concentration for Tentatively Identified Compounds (TICs), where the identification is based on a mass spectral library search.

P - The RPD between the results for the two columns exceeds the method-specified criteria.

Q - The quality control sample exceeds the associated acceptance criteria. For DOD-related projects, LCS and/or Continuing Calibration Standard exceedences are also qualified on all associated sample results. Note: This flag is not applicable for matrix spike recoveries when the sample concentration is greater than 4x the spike added or for batch duplicate RPD when the sample concentrations are less than 5x the RL. (Metals only.)

R - Analytical results are from sample re-analysis.

RE - Analytical results are from sample re-extraction.

S - Analytical results are from modified screening analysis.

J - Estimated value. This represents an estimated concentration for Tentatively Identified Compounds (TICs).

ND - Not detected at the reporting limit (RL) for the sample.

Report Format: Data Usability Report

Project Name: 6473 FULLER MIDDLE **Lab Number:** L1828859
Project Number: 6473 **Report Date:** 08/01/18

REFERENCES

1 Test Methods for Evaluating Solid Waste: Physical/Chemical Methods. EPA SW-846. Third Edition. Updates I - IV, 2007.

97 EPA Test Methods (SW-846) with QC Requirements & Performance Standards for the Analysis of EPA SW-846 Methods under the Massachusetts Contingency Plan, WSC-CAM-IIA, IIB, IIIA, IIIB, IIIC, IIID, VA, VB, VC, VIA, VIB, VIIIA and VIIIB, July 2010.

121 Standard Methods for the Examination of Water and Wastewater. APHA-AWWA-WEF. Standard Methods Online.

125 Test Methods for Evaluating Solid Waste: Physical/Chemical Methods. EPA SW-846. Third Edition. Updates IIIA, April 1998.

LIMITATION OF LIABILITIES

Alpha Analytical performs services with reasonable care and diligence normal to the analytical testing laboratory industry. In the event of an error, the sole and exclusive responsibility of Alpha Analytical shall be to re-perform the work at it's own expense. In no event shall Alpha Analytical be held liable for any incidental, consequential or special damages, including but not limited to, damages in any way connected with the use of, interpretation of, information or analysis provided by Alpha Analytical.

We strongly urge our clients to comply with EPA protocol regarding sample volume, preservation, cooling, containers, sampling procedures, holding time and splitting of samples in the field.

Certification Information

The following analytes are not included in our Primary NELAP Scope of Accreditation:

Westborough Facility
EPA 624: m/p-xylene, o-xylene
EPA 8260C: NPW: 1,2,4,5-Tetramethylbenzene; 4-Ethyltoluene, Azobenzene; SCM: Iodomethane (methyl iodide), Methyl methacrylate, 1,2,4,5-Tetramethylbenzene; 4-Ethyltoluene.
EPA 8270D: NPW: Dimethylnaphthalene,1,4-Diphenylhydrazine; SCM: Dimethylnaphthalene,1,4-Diphenylhydrazine.
EPA 300: DW: Bromide
EPA 6860: SCM: Perchlorate
EPA 9010: NPW and SCM: Amenable Cyanide Distillation
SM4500: NPW: Amenable Cyanide, Dissolved Oxygen; SCM: Total Phosphorus, TKN, NO2, NO3.

Mansfield Facility
SM 2540D: TSS
EPA 8082A: NPW: PCB: 1, 5, 31, 87,101, 110, 141, 151, 153, 180, 183, 187.
EPA TO-15: Halothane, 2,4,4-Trimethyl-2-pentene, 2,4,4-Trimethyl-1-pentene, Thiophene, 2-Methylthiophene, 3-Methylthiophene, 2-Ethylthiophene, 1,2,3-Trimethylbenzene, Indan, Indene, 1,2,4,5-Tetramethylbenzene, Benzothiophene, 1-Methylnaphthalene.
Biological Tissue Matrix: EPA 3050B

The following analytes are included in our Massachusetts DEP Scope of Accreditation

Westborough Facility:

Drinking Water
EPA 300.0: Chloride, Nitrate-N, Fluoride, Sulfate; **EPA 353.2**: Nitrate-N, Nitrite-N; **SM4500NO3-F**: Nitrate-N, Nitrite-N; **SM4500F-C, SM4500CN-CE, EPA 180.1, SM2130B, SM4500Cl-D, SM2320B, SM2540C, SM4500H-B**
EPA 332: Perchlorate; **EPA 524.2:** THMs and VOCs; **EPA 504.1:** EDB, DBCP.
Microbiology: **SM9215B; SM9223-P/A, SM9223B-Colilert-QT,SM9222D**.

Non-Potable Water
SM4500H,B, EPA 120.1, SM2510B, SM2540C, SM2320B, SM4500CL-E, SM4500F-BC, SM4500NH3-BH: Ammonia-N and Kjeldahl-N, **EPA 350.1**: Ammonia-N, **LACHAT 10-107-06-1-B**: Ammonia-N, **EPA 351.1, SM4500NO3-F, EPA 353.2**: Nitrate-N**, EPA 351.1, SM4500P-E, SM4500P-B, E, SM4500SO4-E, SM5220D, EPA 410.4, SM5210B, SM5310C, SM4500CL-D, EPA 1664, EPA 420.1, SM4500-CN-CE, SM2540D.**
EPA 624: Volatile Halocarbons & Aromatics,
EPA 608: Chlordane, Toxaphene, Aldrin, alpha-BHC, beta-BHC, gamma-BHC, delta-BHC, Dieldrin, DDD, DDE, DDT, Endosulfan I, Endosulfan II, Endosulfan sulfate, Endrin, Endrin Aldehyde, Heptachlor, Heptachlor Epoxide, PCBs
EPA 625: SVOC (Acid/Base/Neutral Extractables), **EPA 600/4-81-045**: PCB-Oil.
Microbiology: **SM9223B-Colilert-QT; Enterolert-QT, SM9221E, SM9222D.**

Mansfield Facility:

Drinking Water
EPA 200.7: Al, Ba, Be, Cd, Cr, Cu, Mn, Ni, Na, Ag, Ca, Zn. **EPA 200.8:** Al, Sb, As, Ba, Be, Cd, Cr, Cu, Pb, Mn, Ni, Se, Ag, TL, Zn. **EPA 245.1** Hg.
EPA 522.

Non-Potable Water
EPA 200.7: Al, Sb, As, Be, Cd, Ca, Cr, Co, Cu, Fe, Pb, Mg, Mn, Mo, Ni, K, Se, Ag, Na, Sr, TL, Ti, V, Zn.
EPA 200.8: Al, Sb, As, Be, Cd, Cr, Cu, Pb, Mn, Ni, Se, Ag, TL, Zn.
EPA 245.1 Hg.
SM2340B

For a complete listing of analytes and methods, please contact your Alpha Project Manager.

CHAIN OF CUSTODY

PAGE 1 OF 1

Date Rec'd in Lab: 7/26/18

ALPHA Job #: L1828859

ALPHA TIDAL
8 Walkup Drive
Westboro, MA 01581
Tel: 508-898-9220

320 Forbes Blvd
Mansfield, MA 02048
Tel: 508-822-9300

Client Information

Client: McPhail Associates
Address: 2269 Mass Ave
Cambridge, MA 02140
Phone: 617-868-1420
Email: jgl@mcphailgeo.com

Additional Project Information:

Project Information

Project Name: 6173 Fuller Middle
Project Location: Framingham, MA
Project #: 6173
Project Manager: Joe Lombardo
ALPHA Quote #:

Turn-Around Time

☑ Standard ☐ RUSH (only confirmed if pre-approved)

Date Due:

Report Information - Data Deliverables

☑ ADEx ☑ EMAIL

Billing Information

☐ Same as Client info PO #:

Regulatory Requirements & Project Information Requirements

☑ Yes ☐ No MA MCP Analytical Methods ☐ Yes ☑ No CT RCP Analytical Methods
☐ Yes ☑ No Matrix Spike Required on this SDG? (Required for MCP Inorganics)
☐ Yes ☑ No GW1 Standards (Info Required for Metals & EPH with Targets)
☐ Yes ☑ No NPDES RGP
☐ Other State /Fed Program _____ Criteria _____

ANALYSIS: VOC: ☐ 8260 ☐ 624 ☐ 524.2; SVOC: ☐ ABN ☐ PAH; METALS: ☐ MCP 13 ☐ MCP 14 ☐ RCP 15; METALS: ☐ RCRA5 ☑ RCRA8 ☐ PP13; EPH: ☐ Ranges & Targets ☐ Ranges Only; VPH: ☐ Ranges & Targets ☐ Ranges Only; ☐ PCB ☐ PEST; TPH: ☐ Quant Only ☐ Fingerprint; Package 4

SAMPLE INFO: Filtration ☐ Field ☐ Lab to do; Preservation ☐ Lab to do

ALPHA Lab ID (Lab Use Only)	Sample ID	Collection Date	Collection Time	Sample Matrix	Sampler Initials	Package 4	Sample Comments	Total # Bottles
28859-01	B-205 S-2 2-4	7/26/17	10:15	S	JG	✓		3
02	B-205 0-4.5 fill		10:15			✓		2
03	B-204 S-2 2-4'		8:00			✓		3
04	B-204 0-4 fill		8:00			✓		2
05	B-201 S-1 0.5-2'		12:00			✓		3
06	B-201 0.5-5 fill		12:00			✓		2
07	B-203 S-2 2-3.5		1:15			✓		3
08	B-203 0.4-3.5 fill		1:15			✓		2

	Package 4
Container Type	NP
Preservative	F/A

Container Type: P= Plastic; A= Amber glass; V= Vial; G= Glass; B= Bacteria cup; C= Cube; O= Other; E= Encore; D= BOD Bottle

Preservative: A= None; B= HCl; C= HNO_3; D= H_2SO_4; E= NaOH; F= MeOH; G= $NaHSO_4$; H= $Na_2S_2O_3$; I= Ascorbic Acid; J= NH_4Cl; K= Zn Acetate; O= Other

Relinquished By:	Date/Time	Received By:	Date/Time
[signature]	7/26/18 1522	[signature] KAL	7/26/18 1448
[signature]	7/26/18 1522	[signature]	7/26/18 1522

All samples submitted are subject to Alpha's Terms and Conditions. See reverse side.

FORM NO: 01-01 (rev. 12-Mar-2012)

Method Blank Summary
Form 4
VOLATILES

Client	: McPhail Associates	Lab Number	: L1828859
Project Name	: 6473 FULLER MIDDLE	Project Number	: 6473
Lab Sample ID	: WG1141600-5	Lab File ID	: V23180731N05
Instrument ID	: VOA123		
Matrix	: SOIL	Analysis Date	: 07/31/18 19:57

Client Sample No.	Lab Sample ID	Analysis Date
WG1141600-3LCS	WG1141600-3	07/31/18 18:16
WG1141600-4LCSD	WG1141600-4	07/31/18 18:41
B-205, S-2 2-4	L1828859-01	07/31/18 20:48
B-204, S-2 2.4'	L1828859-03	07/31/18 21:13
B-201, S-1 0.5-2'	L1828859-05	07/31/18 21:39
B-203, S-2 2-3.5	L1828859-07	07/31/18 22:04

Continuing Calibration
Form 7

Client	: McPhail Associates	Lab Number	: L1828859
Project Name	: 6473 FULLER MIDDLE	Project Number	: 6473
Instrument ID	: VOA123	Calibration Date	: 07/31/18 18:16
Lab File ID	: V23180731N01	Init. Calib. Date(s)	: 06/06/18 06/07/18
Sample No	: WG1141600-2	Init. Calib. Times	: 16:59 12:17
Channel	:		

Compound	Ave. RRF	RRF	Min RRF	%D	Max %D	Area%	Dev(min)
Fluorobenzene	1	1	-	0	20	59	-.02
Dichlorodifluoromethane	0.226	0.213	-	5.8	20	58	0
Chloromethane	0.244	0.318	-	-30.3*	20	79	0
Vinyl chloride	0.27	0.284	-	-5.2	20	62	0
Bromomethane	20	23.994	-	-20	20	67	0
Chloroethane	0.184	0.171	-	7.1	20	55	.01
Trichlorofluoromethane	0.326	0.309	-	5.2	20	56	.01
Ethyl ether	0.139	0.16	-	-15.1	20	67	0
1,1-Dichloroethene	0.197	0.217	-	-10.2	20	67	0
Carbon disulfide	0.665	0.75	-	-12.8	20	70	0
Freon-113	0.197	0.204	-	-3.6	20	63	0
Acrolein	0.048	0.06	-	-25*	20	74	-.01
Methylene chloride	20	23.243	-	-16.2	20	67	0
Acetone	20	25.809	-	-29*	20	70	-.02
trans-1,2-Dichloroethene	0.23	0.257	-	-11.7	20	66	0
Methyl acetate	0.183	0.232	-	-26.8*	20	75	-.01
Methyl tert-butyl ether	0.717	0.773	-	-7.8	20	63	-.01
tert-Butyl alcohol	0.04	0.043*	-	-7.5	20	61	-.03
Diisopropyl ether	0.691	0.91	-	-31.7*	20	76	-.02
1,1-Dichloroethane	0.409	0.491	-	-20	20	70	-.01
Halothane	0.177	0.182	-	-2.8	20	61	-.01
Acrylonitrile	0.092	0.121	-	-31.5*	20	75	-.02
Ethyl tert-butyl ether	0.746	0.843	-	-13	20	65	-.02
Vinyl acetate	0.566	0.699	-	-23.5*	20	71	-.02
cis-1,2-Dichloroethene	0.257	0.286	-	-11.3	20	65	-.01
2,2-Dichloropropane	0.355	0.394	-	-11	20	66	-.01
Bromochloromethane	0.12	0.125	-	-4.2	20	60	-.02
Cyclohexane	0.359	0.441	-	-22.8*	20	76	-.01
Chloroform	0.409	0.447	-	-9.3	20	64	-.01
Ethyl acetate	0.27	0.345	-	-27.8*	20	74	-.02
Carbon tetrachloride	0.302	0.302	-	0	20	60	-.01
Tetrahydrofuran	0.099	0.127	-	-28.3*	20	76	-.02
Dibromofluoromethane	0.252	0.233	-	7.5	20	55	-.01
1,1,1-Trichloroethane	0.349	0.362	-	-3.7	20	61	-.01
2-Butanone	0.128	0.165	-	-28.9*	20	76	-.02
1,1-Dichloropropene	0.305	0.347	-	-13.8	20	68	-.02
Benzene	0.959	1.094	-	-14.1	20	68	-.02
tert-Amyl methyl ether	0.757	0.794	-	-4.9	20	61	-.02
1,2-Dichloroethane-d4	0.283	0.267	-	5.7	20	57	-.02
1,2-Dichloroethane	0.318	0.328	-	-3.1	20	59	-.02
Methyl cyclohexane	0.404	0.427	-	-5.7	20	64	-.01
Trichloroethene	0.241	0.259	-	-7.5	20	63	-.01
Dibromomethane	0.153	0.158	-	-3.3	20	60	-.02
1,2-Dichloropropane	0.236	0.289	-	-22.5*	20	71	-.02
2-Chloroethyl vinyl ether	0.175	0.214	-	-22.3*	20	71	-.02

* Value outside of QC limits.

Continuing Calibration
Form 7

Client	: McPhail Associates	Lab Number	: L1828859
Project Name	: 6473 FULLER MIDDLE	Project Number	: 6473
Instrument ID	: VOA123	Calibration Date	: 07/31/18 18:16
Lab File ID	: V23180731N01	Init. Calib. Date(s)	: 06/06/18 06/07/18
Sample No	: WG1141600-2	Init. Calib. Times	: 16:59 12:17
Channel	:		

Compound	Ave. RRF	RRF	Min RRF	%D	Max %D	Area%	Dev(min)
Bromodichloromethane	0.334	0.351	-	-5.1	20	62	-.02
1,4-Dioxane	0.00396	0.00436*	-	-10.1	20	58	-.03
cis-1,3-Dichloropropene	0.414	0.468	-	-13	20	65	-.02
Chlorobenzene-d5	1	1	-	0	20	61	-.02
Toluene-d8	1.259	1.283	-	-1.9	20	61	-.02
Toluene	0.77	0.816	-	-6	20	65	-.02
4-Methyl-2-pentanone	0.132	0.159	-	-20.5*	20	71	-.03
Tetrachloroethene	0.308	0.299	-	2.9	20	60	-.02
trans-1,3-Dichloropropene	0.474	0.504	-	-6.3	20	62	-.02
Ethyl methacrylate	0.422	0.452	-	-7.1	20	64	-.02
1,1,2-Trichloroethane	0.235	0.254	-	-8.1	20	64	-.02
Chlorodibromomethane	0.317	0.305	-	3.8	20	57	-.02
1,3-Dichloropropane	0.476	0.522	-	-9.7	20	64	-.02
1,2-Dibromoethane	0.285	0.287	-	-0.7	20	60	-.03
2-Hexanone	0.25	0.287	-	-14.8	20	72	-.02
Chlorobenzene	0.84	0.856	-	-1.9	20	61	-.02
Ethylbenzene	1.42	1.498	-	-5.5	20	63	-.02
1,1,1,2-Tetrachloroethane	0.298	0.291	-	2.3	20	57	-.02
p/m Xylene	0.552	0.566	-	-2.5	20	61	-.02
o Xylene	0.545	0.551	-	-1.1	20	60	-.03
Styrene	0.884	0.917	-	-3.7	20	60	-.03
1,4-Dichlorobenzene-d4	1	1	-	0	20	58	-.02
Bromoform	0.441	0.416	-	5.7	20	53	-.02
Isopropylbenzene	2.608	2.796	-	-7.2	20	60	-.02
4-Bromofluorobenzene	0.936	1.025	-	-9.5	20	63	-.02
Bromobenzene	0.675	0.676	-	-0.1	20	57	-.02
n-Propylbenzene	3.135	3.449	-	-10	20	61	-.02
1,4-Dichlorobutane	0.929	1.099	-	-18.3	20	67	-.02
1,1,2,2-Tetrachloroethane	0.78	0.857	-	-9.9	20	61	-.02
4-Ethyltoluene	2.764	2.859	-	-3.4	20	58	-.02
2-Chlorotoluene	1.899	2.338	-	-23.1*	20	69	-.02
1,3,5-Trimethylbenzene	2.203	2.302	-	-4.5	20	58	-.02
1,2,3-Trichloropropane	0.625	0.68	-	-8.8	20	61	-.02
trans-1,4-Dichloro-2-buten	0.231	0.248	-	-7.4	20	59	-.02
4-Chlorotoluene	1.96	2.129	-	-8.6	20	61	-.02
tert-Butylbenzene	1.861	1.912	-	-2.7	20	58	-.02
1,2,4-Trimethylbenzene	2.257	2.356	-	-4.4	20	58	-.02
sec-Butylbenzene	2.822	2.983	-	-5.7	20	59	-.02
p-Isopropyltoluene	2.405	2.479	-	-3.1	20	58	-.02
1,3-Dichlorobenzene	1.304	1.313	-	-0.7	20	57	-.02
1,4-Dichlorobenzene	1.314	1.322	-	-0.6	20	57	-.02
p-Diethylbenzene	1.565	1.557	-	0.5	20	56	-.02
n-Butylbenzene	2.316	2.516	-	-8.6	20	60	-.02
1,2-Dichlorobenzene	1.236	1.232	-	0.3	20	56	-.02
1,2,4,5-Tetramethylbenzene	2.478	2.444	-	1.4	20	55	-.02

* Value outside of QC limits.

Continuing Calibration
Form 7

Client	: McPhail Associates	Lab Number	: L1828859
Project Name	: 6473 FULLER MIDDLE	Project Number	: 6473
Instrument ID	: VOA123	Calibration Date	: 07/31/18 18:16
Lab File ID	: V23180731N01	Init. Calib. Date(s)	: 06/06/18 06/07/18
Sample No	: WG1141600-2	Init. Calib. Times	: 16:59 12:17
Channel	:		

Compound	Ave. RRF	RRF	Min RRF	%D	Max %D	Area%	Dev(min)
1,2-Dibromo-3-chloropropan	0.146	0.132	-	9.6	20	51	-.02
1,3,5-Trichlorobenzene	1.039	1.012	-	2.6	20	55	-.01
Hexachlorobutadiene	0.464	0.445	-	4.1	20	54	-.02
1,2,4-Trichlorobenzene	0.92	0.921	-	-0.1	20	56	-.02
Naphthalene	2.497	2.532	-	-1.4	20	57	-.01
1,2,3-Trichlorobenzene	0.885	0.876	-	1	20	55	-.02

* Value outside of QC limits.

Continuing Calibration
Form 7

Client	: McPhail Associates	Lab Number	: L1814382
Project Name	: FULLER MIDDLE SCHOOL	Project Number	: 6473
Instrument ID	: VOA100	Calibration Date	: 04/27/18 09:32
Lab File ID	: V00180427B01	Init. Calib. Date(s)	: 03/14/18 03/15/18
Sample No	: WG1110711-2	Init. Calib. Times	: 22:04 01:32
Channel	:		

Compound	Ave. RRF	RRF	Min RRF	%D	Max %D	Area%	Dev(min)
1,3,5-Trichlorobenzene	0.936	0.823	-	12.1	20	105	0
Hexachlorobutadiene	0.37	0.317	-	14.3	20	102	0
1,2,4-Trichlorobenzene	0.738	0.688	-	6.8	20	110	0
Naphthalene	1.693	1.601	-	5.4	20	116	0
1,2,3-Trichlorobenzene	0.668	0.626	-	6.3	20	111	0

* Value outside of QC limits.

DO NOT REMOVE
THIS PAGE INTENTIONALLY LEFT BLANK

APPENDIX E

HAZARDOUS MATERIALS SUMMARY REPORT

DO NOT REMOVE
THIS PAGE INTENTIONALLY LEFT BLANK

CDW CONSULTANTS, INC.
CIVIL & ENVIRONMENTAL ENGINEERS

HAZARDOUS MATERIALS SUMMARY REPORT

Fuller Middle School
31 Flagg Drive
Framingham, Massachusetts

Prepared for

Jonathan Levi Architects
266 Beacon Street Boston MA 02116

May 2019
Updated October 2019

CDW Project # 1597.0

6 Huron Drive, Natick, MA 01760 508-875-2657
www.cdwconsultants.com

TABLE OF CONTENTS

Page
1.0 INTRODUCTION 1
2.0 GENERAL SITE CONDITIONS 1
4.0 ASBESTOS SURVEY 8
4.1 Methods 8
4.2 Findings 9
4.3 Other Observations and Plans Review 16
4.4 Observations July 2019 17
4.5 Recommendations 18
5.0 LEAD-BASED PAINT 18
5.1 Methods 18
5.2 Findings 18
5.3 Recommendations 20
6.0 OTHER HAZARDOUS MATERIALS SURVEY 21
6.1 Findings 22
6.2 Recommendations 24

TABLES

Table 1: ACM Quantities

APPENDICIES

Appendix A: Laboratory Analytical Report
Appendix B: Lead Paint Laboratory Analytical Report
Appendix C: PCB Laboratory Analytical Report

1.0 INTRODUCTION

CDW Consultants, Inc. (CDW) is pleased to present this letter report summarizing the findings of the suspect asbestos-containing materials (ACM), and hazardous materials inspection of the Fuller Middle School, located at 31 Flagg Drive in Framingham, Massachusetts (Site). The scope of work was to conduct an inspection to identify and quantify suspect ACM, lead based paint (LBP), polychlorinated biphenyls (PCBs), and visually identify hazardous materials located in the building. The inspection was conducted in support of a construction documents for Site demolition. In February and March 2019, Ms. Susan Cahalan, (Massachusetts DOS Asbestos Inspector #AI60784) and Mr. Ted Sherry (Massachusetts DOS Asbestos Inspector #AI032572) conducted a visual interior and exterior building inspection for suspect materials. Roof sampling and exploratory cuts of exterior masonry were also conducted.

2.0 GENERAL SITE CONDITIONS

According to information provided by the Massachusetts School Building Authority (MSBA), existing condition studies by others and visual inspection, the Fuller Middle School was constructed in 1958 as the Framingham South High School. The Fuller Middle School houses grades 6-8. Fuller is also home to the Framingham Public Access Television Station that occupies 8,000 square feet (SF) of building space. In addition, the Buildings and Grounds Department houses its operations and storage for vehicles and equipment occupying approximately 15,000 SF of building space. Also, there are four classrooms and several offices currently occupied by the Framingham Public Schools ESL program and the Vision Center that take up almost 10,000 square feet of building space. Collectively, those operations occupy 25,000 SF of the total 196,000 SF of building space.

The Site building is a one-story cast-in-place concrete structure founded on precast concrete piles. The roof structure is gypsum concrete. Exterior walls are single-glazed aluminum store front with some areas of brick masonry. Two-thirds of the building area has a dirt floor crawl-space beneath it. The interior is painted concrete masonry block. Ceilings are mixed ceiling tectum with suspended ceilings in select areas throughout the building including the auditorium. Flooring is vinyl composite tile with some known to contain asbestos, concrete in the shops and storage areas, and ceramic in bathrooms and locker rooms. Select rooms have carpet. Doors, frames and hardware are original.

The building is comprised of approximately 100 rooms of which 50 are classrooms with an average size of 732 SF. There are 5 science classrooms and 1 science laboratory with an average size 871 SF. The science laboratory has only received minor upgrades since 1958. In addition to the science classrooms and science lab, there are 4 computer labs totaling 2,900 SF. There is one 3,600 SF media center/reading. There are 2 gymnasiums (1 at 9,500 SF and 1 at 5,000 SF) and one 6,800 SF auditorium.

No additions have been made to the building since it was originally constructed. Framingham South High School became Fuller Middle School in 1995 without major capital improvement. The

following improvements have been completed at Fuller Middle School:

- 1995 Roof Replacement (cold applied built up bitumen (TREMCO))
- 2005 Converted heating system from oil to natural gas
- 2005 Replaced boilers, boiler room pipe abatement
- 2007 Auditorium Improvements

The building was constructed on structural piles and caissons with a crawl space and a dirt floor beneath two-thirds of the building. The heating system is comprised of three natural gas fired boilers and the majority of the building is hydronic forced hot water. Ventilation is provided through AHUs in the crawl-space and classroom unit-ventilators. The electrical system has original switch gear.

Presently, the Plumbing Systems serving the building are cold water, hot water, sanitary, waste and vent system, storm drain piping, and natural gas. Municipal sewer and municipal water service the Building. The majority of the plumbing systems are original to the building. Piping in the crawlspace has asbestos pipe insulation. Science classroom sinks are resin type with cold and hot water faucets.

The boiler room consists of three (3) cast iron steel sectional Weil McLain Model 88-12 Boilers equipped with Webster dual fuel burners with auto flame controller. The boilers were installed in 2003. The boilers currently only use natural gas. The fuel oil tank has been removed, but the existing fuel oil pumps, monitor control panel and fuel oil piping within the boiler room have been abandoned in place. The boilers are each vented with insulated steel boiler breeching to a common breeching stack which terminates above the building roof with a single wall steel breeching equipped with a rain cap. The majority of hot water piping is distributed from the boiler room to the building heating equipment through a crawlspace. There are five (5) indoor hot water heating and ventilation (HV) air handing units located in the crawlspace of the building. These units HV-5,6,7,8,13 and 14 respectively serve the Library, Library Offices, Administration offices, Girls Locker room, Boys Locker Room and Cafeteria. Black painted uninsulated ductwork is routed up from the units to the areas they serve. All of the units were installed circa 1957, and the units and associated ductwork, piping and control components appear to be in poor conditions. Rooms/zones with HVAC equipment that is controlled by the DDC system typically have newer AEM thermostat temperature sensors, whereas rooms/zone with HVAC equipment controlled by Pneumatic controls have older Johnson control pneumatic thermostats. There are approximately forty-four (44) roof mounted exhaust air fans, with most fans being originally installed equipment from 1957.

The school is heated by fin tube radiation and unit heaters. The Auditorium is served by heating and ventilation unit. The kitchen area is heated with wall mounted fin tube radiation heating. Multi-purpose gymnasium is provided with two individual air-handling units located in roof penthouse mechanical rooms. The Buildings and Grounds office area is primarily heating, ventilated and air conditioned by a packaged rooftop unit equipped with gas fired heating and direct expansion electric cooling.

Most of the lighting systems have been retrofitted with new lamps and ballasts. The existing generator has been removed. The emergency lighting systems consist of self-contained battery units.

The primary three phase service runs overhead along Flagg Drive. The facility is serviced by three vaults with four electrical services. Primary service No. 1, originates on utility pole and runs underground into a utility transformer located inside vault "A" on the west end of the building. Primary service No. 2 runs in (1) 3" conduit in the crawl space from vault "A" into Vault "B" on the central part of the building. Primary service No. 3 runs in (1) 3" conduit in the crawl space from Vault "B" into Vault "C" on the east end of the Building. Vault "A" has two transformers. Vault "B" has one transformer. Vault "C" has one transformer. The vault mounted transformers are owned by the utility company and due to their age are likely to contain PCBs. Most switchgear is original to the building. Switchgear are known to contain asbestos transite panels.

3.0 AHERA REPORTS SUMMARY

CDW reviewed the AHERA reports, prepared by Fuss & O'Neill Inc., dated June 2016 and the Survey Report, prepared by Universal Environmental Consultants, ND. Additionally, CDW reviewed the "Six Month AHERA Asbestos Periodic Surveillance Report", prepared by Fuss & O'Neill, dated December 2018.

ACM findings of the Universal Environmental Consultants Report are presented in the below table:

Material	Location	Quantity
Vinyl Floor Tile and Mastic	Throughout	106,000 SF
Pipe and Hard Joint Insulation	Throughout	6,500 LF
Interior Windows and Doors	Throughout	400 Each
Blackboards	Throughout	200 Each
Flex Connectors	Throughout	15 Each
Roof Drain Insulation	Throughout	450 LF
Transite Board	Science Rooms	220 SF
Wood Flooring Paper and Mastic	Stage	500 SF
Wire Insulation	Stage	60 LF
Wood Flooring, Paper and Mastic	Gym	8,000 SF
Windows	Exterior	400 Each
Doors	Exterior	30 Each
Univent Caulk	Exterior	40 each

ACM findings from the Fuss & O'Neill EnviroScience AHERA Reports from June 2016 and December 2018 are presented in the below table:

Material	Location	Asbestos Content
Mudded Pipe-Fitting Insulation	Basement Storage Room, Crawlspaces A, B, C, & D, Rooms A-3, A-27, A-17a, A-37, C-13, C-17, C-18, C-15, C-16, D-31, D-32, B-37A, West Penthouse Roof, Basement Storage Room	5% Chrysotile
Corrugated Paper-Type Pipe Insulation	Basement Storage Room, Crawlspaces, Rooms A3, A27, A17a, A37, C13, C-17, C-18, C-15, C-16, D-31, D-32, B-37A, West Penthouse Roof, Basement Storage Room.	80% Chrysotile
Vibration Isolators	Crawlspaces	Assumed Positive
Vibration Isolators	Room A-21	Assumed Positive
Vibration Isolators	Room B-1A, B-26, C-13, D-9	Assumed Positive
Roof Drain Insulation	Rooms A-24, B-8, B10, B-15A, B-20, B-22, B-28, B-46, C-8, C-27, C-22, C-09, C-15, D-31, D-16, D-29, D-33, D-36	Sampled Positive
Fiber-Reinforced Paneling	B-9 Lab Hood	15% Chrysotile
Fiber-Reinforced Paneling	D-31 Exhaust Vent	15% Chrysotile
Fiber-Reinforced Paneling	D-6 (Girls Locker Room) Upper Wall at Vent	15% Chrysotile

Material	Location	Asbestos Content
Wire Insulation	Stage	Assumed Positive
Fire Curtain	Stage	Assumed Positive
9” x 9” Floor Tile, Various Colors	Hallway to Auditorium Stage, Hallway Outside Boys Locker Room, Hallway Outside C-14, Hallway Outside B-32, B-35, B-37, B-39, Hallway Outside A-8, C-1, B-1A, B-3 and B-4	2% - 3% Chrysotile
Black Mastic Associated with 9” x 9” Floor Tile	Hallway to Auditorium Stage, Hallway Outside Boys Locker Room, Hallway Outside C-14, Hallway Outside B32, B-35, B-37, B-39, Hallway Outside A-8, C-1, B-1A, B-3 and B-4	2% Chrysotile

Building materials that do not contain ACM, from the Fuss & O’Neill EnviroScience AHERA Reports are presented in the below table:

Material	Location
Spray-On/Applied Fire Proofing Associated with Ceiling Beams	Basement Storage
Red, Orange, & Tan Mottled 12” x 12” Floor Tile	C17 Women’s Bathroom
Tan Mastic Associated with Red, Orange, & Tan Mottled 12” x 12” Floor Tile	C17 Women’s Bathroom
Black Mastic Associated with Red, Orange, & Tan Mottled 12” x 12” Floor Tile	C17 Women’s Bathroom
White & Beige Mottled 12” x 12” Floor Tile	Hallway Outside B4

Material	Location
Yellow Mastic Associated with White & Beige Mottled 12” x 12” Floor Tile	Hallway Outside B4
Black Vinyl Baseboard	Classrooms, Offices, & Hallways (Throughout School)
Yellow Mastic Associated with Black Vinyl Baseboard	Classrooms, Offices, & Hallways (Throughout School)
Black Mastic Associated with Light Brown with White & Brown Streaks 9” x 9” Floor Tile	Hallway Outside Building Permits

The estimated quantities from the Fuss & O’Neill AHERA reports are presented in the below table.

Material	Location	Asbestos Content	Quantity
Mudded Pipe Insulation	Basement Storage Room, Crawlspace, A3, A27, A17, A37, C-13, C18, C-15, C-16, D-31 Pipe Tunnel, D-32, B-37, West Penthouse on Roof	5% Chrysotile	575 Each
Corrugated Paper Type Pipe Insulation	Basement Storage Room, Crawlspaces A, B, C & D, A3, A27, A17, A37, C-13, C-17 and 18, C-15, C-16, D-31 (Pipe Tunnel), D-32, B-37A, West Penthouse on Roof	80% Chrysotile	6,210
Vibration Isolators	Crawlspaces, A-21, B-1A, B-26, C-13, D-9	PACM	25 Each
Roof Drain Insulation	A-24, B-8, B-18, B-15A, B-20, B-22, B-28, B-46, C-8, C-27, C-22, C-09, C-15, D-31, D-	Sampled, Positive	20 Each

Material	Location	Asbestos Content	Quantity
	16, D-29, D-33		
Fiber Reinforced Paneling	B-9-Lab Hood, D-31 Exhaust Vent, D-6-Upper Wall at Vent	15% Chrysotile	210 SF
Wire Insulation	Stage	PACM	60 LF
Fire Curtain	Stage	PACM	1 Each
9”x9” Floor Tile and Associated Mastic	Hall to Auditorium Stage, Hall outside Boy’s Locker Room, Hall outside: C-14, B-32, B-35, B-37, B-39, A-8, C-1, B-1, B-3, B-4	2%-3% Chrysotile	105,300 SF

In 2017, CDW conducted a limited hazardous materials survey is support of the Feasibility Study for the Site. The Results of the laboratory sampling are summarized in the below tables:

Identified ACM

Material	Location	Asbestos Content
Interior Window Glaze on 4x4 Chix Wire Windows	Classrooms to Hall – C Classrooms C-15, C-11, C-10	2% chrysotile
Black Sink Coating	B5-Science, Standard Sink	5% Chrysotile
Interior Window Glaze	A-5, Adult ESL Wood Framed Window	2% Chrysotile
Interior Window Glaze on 4x4 Chix Wire Windows	Classrooms B-5, B-7, B10	2% Chrysotile
Interior Window Glaze on Chix Wire Wood Framed Windows	Near A-12, A-13	3% Chrysotile
Interior Window Glaze	Wood Molding Framed Windows at Library	2% Chrysotile
Interior White/Gray Caulk	Between Steel Beams and CMU in Classrooms-	10% chrysotile

Material	Location	Asbestos Content
	Classroom #s B-11, B-24, B-41, B-32, B-41	
Interior Hard Yellow Caulk	Between Steel Beams and CMU ½ Wall Interior Side of Courtyard	5% chrysotile
Interior White Caulk	Between Steel Beam and Brick Near Door #9	3% Chrysotile
Exterior Gray Window Caulk	At the Sides of Window Banks	5% Chrysotile
Exterior Door Caulk	Door 16	2% Chrysotile
Exterior Door Caulk	Door 11	2% Chrysotile
Exterior Door Caulk	Door 9	2% Chrysotile
Exterior Gray Window Glaze	Window Banks, Interior Side of Exterior Window	2% Chrysotile

Building materials that do not contain ACM, from the CDW feasibility study are presented in the below table:

Material	Location
Interior Window Glaze	Sidelight Hall Door Assembly Near C15
Interior Window Glaze on Door	Hall Assembly Near C15
Interior Window Glaze on 4x4 Chix Wire Windows	Classrooms to Hall – B Classrooms B-17, B-15A, B-21
Interior Window Glaze on Sidelights	Hall Door Assembly Near B-17
White 2x2 Ceiling Panel	Ceiling, Hall Outside Library, Main Offices
Yellow Insulation	Under White 2x2 Ceiling Panels
White 2x4 Ceiling Panel	Ceiling, Hall Outside B-20, A-18, B-48, Main Entrance Hall, Hall, Outside C-14, Hall Near Door 16, Hall Near Fitness Center
Yellow Insulation	Under White 2x4 Ceiling Panels
Exterior Thick, Chunky Window Glaze	2x2 Windows Near Kitchen
Exterior Brown Fibrous Expansion Joint	Foundation

4.0 ASBESTOS SURVEY

4.1 Methods

The USEPA and Massachusetts Department of Environmental Protection (MassDEP) are responsible for developing and enforcing regulations necessary to protect the general public from airborne contaminants that are known to be hazardous to human health. They regulate ACM associated with

renovation, demolition, and asbestos abatement projects via the National Emissions Standard for Hazardous Air Pollutants (NESHAP) Title 40 CFR Part 61 regulation and MassDEP Chapter 141-E Asbestos Management and Control. These regulations require that buildings be inspected for ACM prior to renovation/demolition projects. They stipulate that all friable ACM as well as non-friable ACM that are in poor condition or will be made friable by renovation or demolition activity be removed or otherwise appropriately abated before they are disturbed.

The investigative work for the asbestos survey included conducting a visual inspection of physically accessible areas of the structure, reviewing plans and coring and repairing brick to observe any vapor barrier, as well as the roof for suspect materials. Once the inspection was completed, the building components were categorized into homogeneous areas. These homogeneous areas included: surfacing materials, thermal system insulation, and miscellaneous materials. CDW collected bulk samples of different homogeneous suspect materials for asbestos analysis. The bulk samples were delivered under chain of custody to Asbestos Identification Laboratory, Inc. (AIL), and EMSL Analytical, Inc. (EMSL) of Woburn, Massachusetts, fully accredited asbestos analytical laboratories, analyzed the bulk samples utilizing Polarized Light Microscopy (PLM) in accordance with the requirements of 40 CFR Part 763, Subpart F. Samples analyzed to contain greater than 1% asbestos are to be treated as ACM as defined by the USEPA and MassDEP. A positive stop method was used – if one sample in a homogeneous group is positive then additional samples of the same material are not analyzed. The asbestos analytical reports are provided in Appendix A.

4.2 Findings

Findings of the ACM sampling are presented in the below table:

Field ID / Laboratory ID	Description	Location	Result
1A, 1B, 1C 449664, 449665, 449666	Tar Paper	Under Wood Stage in Auditorium	ND
2A, 2B, 2C 449667, 449668, 449669	Black Brown Glue	Under Tar Paper, Under Stage Floor in Auditorium	ND
3A, 3B, 3C 449670, 449671, 449672	Gray Paper	Under Wood Gym Floor	ND
4A, 4B, 4C 449673, 449674, 449675	Black Coating	On Underside of Gray Paper Under Wood Gym Floor	ND
5A, 5B 449676, 449677	Black Tar	Inside Front Metal Panel-Heater Room A8	ND
6A, 6B 449678, 449679	Black-Grey Insulation	Under Heater Room A8	ND
Roof-1A	Black Tar + Gravel	Top Layer of Roof	ND

Field ID / Laboratory ID	Description	Location	Result
449680		Core 1 – Over Men's Locker Room	
Roof-1B 449681	Black Felt Paper	2nd Layer of Roof Core 1	ND
Roof-1C 449682	Gray Foam Paper Top + Bottom Foam	Roof Core 1	ND
Roof-1D 449683	Tar Paper	On Roof Deck – Roof Core 1	ND
Roof-1E 449684	Gypsum Board	Roof Deck – Roof Core 1	ND
Roof-2A 449685	Rolled Asphalt Roof	Top Layer Roof Core 2 – Cafeteria Wing	ND
Roof-2B 449686	Gray Paper	Top + Bottom Foam – Roof Core 2	ND
Roof-2C 449687	Tar Paper	Over Roof Deck – Roof Core 2	ND
Roof-2D 449688	Tar Paper	Top of Concrete Deck – Roof Core 2	ND
Roof-3A 449689	Rolled Asphalt Roof	Roof Core 3 - Gym Roof	ND
Roof-3B 449690	Black Tar	Under Rolled Asphalt Roof – Roof Core 3	ND
Roof-3C 449691	Tar-Black	On Top of Foam Core Roof – Roof Core 3	ND
Roof-3D 449692	Gray Paper	On Top of Concrete Roof Deck – Roof Core 3	ND
Roof-4A 449693	Rolled Asphalt Roof	Top Layer Roof Core 4 – Over Auditorium	ND
Roof-4B 449694	Black Tar	Top of Foam Roof Care – Roof Core 4	ND
Roof-4C 449695	Black Grey Tar Paper	On Concrete Deck – Roof Core 4	ND
Roof-5A 449696	Rolled Asphalt Roof	Roof Care Top Layer – Roof Core 5-Over B-Wing	ND
Roof-5B 449697	Black Tar Paper	Top + Bottom Roof Foam – Roof Core 5	ND
Roof-5C 449698	Black-Grey Tar Paper	On Concrete Roof Deck – Roof Core 5	ND

Field ID / Laboratory ID	Description	Location	Result
Roof-6A 449699	Black Rolled Asphalt Roof	Top Layer Roof Core – Roof Core 6 – Over A Wing	ND
Roof-6B 449700	Gray Paper	Top + Bottom Roof Foam – Roof Core 6	ND
Roof-6C 449701	Black-Dark Gray Paper	On Concrete Roof Deck – Roof Core 6	ND
Roof-7A 449702	Rolled Asphalt Roof	Top layer Roof Core 7 – Over B Wing- B-41 Side	ND
Roof-7B 449703	Black Tar Paper Top of Foam	Roof Core 7	ND
Roof-7C 449704	Dk Grey Paper Thick	Top Concrete Deck – Roof Core 7	ND
Roof-8A 449705	Black Glue Under Rubber	Roof Curb Cut, Roof to Gym Wall	ND
Roof-8B 449706	Grey-Black Glue	Roof Curb Cut, Roof to Gym Wall	ND
Roof-8C 449707	Asphalt layer Over Wood	Roof Curb Cut, Roof to Gym Wall	ND
7A, 7B 449708	Grey Glue Daub Behind Blackboard	Room A8 - Older Board	Chrysotile – 30%
8A, 8B 449709	Brownish Gray Glue Daub	Room A16 - Older Black Board	ND
9A, 9B, 9C 456361, 456362, 456363	1’x1’ Tan Floor Tile with Light and Dark Brown Mottles	Rooms A6 + B7	ND
10A, 10B, 10C 456364, 456365, 456366	Black Mastic	Under 1’x1’ Tan Floor Tile in Rooms A6 + B7	ND
11A, 11B 456367, 456368	Tan Cloth Over Fiberglass Ceiling Panel	Room A7	ND
12A, 12B, 12C 456369, 456370, 456371	1’x1’ Light Tan Floor Tile with Dark Tan Mottles	Rooms C25 + C26	ND

Field ID / Laboratory ID	Description	Location	Result
13A, 13B, 13C 456372, 456372, 456374	Black/Brown Mastic	Under 1'x1' Tan Floor Tile, Rooms C25 + C26	Chrysotile – 5%
14A, 14B 456375, 456376	Joint Compound	Divider Wall, C25-C26	ND
15 456377	Brown Tan Covebase Glue	Under Rubber Covebase in C26	ND
16A, 16B 456378, 456379	Black Vinyl Covebase	Bottom Brown Cabinet (Teacher's Closet with Vent - C25 + C26	ND
17A, 17B 456380, 456381	Brown Mastic	Under Black Vinyl Covebase in C25 + C26	ND
18 456382	Brown Flex Connector Material	Guidance Office Connected to AC Unit	ND
19 456393	Interior Tan Window Glaze	Library Single Door to Hallway with Small Window	ND
20 456394	Interior Window Glaze	Library Double Doors to Hallway with Large Windows	ND
21A, 21B, 21C 456385, 456386, 456387	Tan 1'x1' Floor Tile Under Carpet	Library	Chrysotile – 2%
22A, 22B, 22C 456388, 456389, 456390	Black Mastic	Under Tan 1'x1' Floor Tile- Library	ND
23A, 23B 456391, 456392	Black Vinyl Covebase	Main Office Area	ND
24A, 24B 456393, 456394	Brown Mastic	Under Vinyl Covebase, Main Office	ND
25A, 25B, 25C 456395, 456396, 456397	1'x1' Tan Floor Tile with Red Streaks	Under Carpet in Main Office	Chrysotile – 2%
26A, 26B, 26C 456398, 456399, 456400	Black Mastic	Under 1'x1' Tan Floor Tile, Main Office	ND
27 456401	Yellow Carpet Glue	Library (Appears	ND

Field ID / Laboratory ID	Description	Location	Result
		Newer)	
28A, 28B 456402, 456403	Mastic and Levelastic Mix	Edge of Rug in Library near Outer Wall on Concrete	ND
29A, 29B, 29C 456404, 456405, 456406	Black Vinyl Covebase	Around Cabinets with Vents (Teacher's Closet), Rooms B-46, B-40 and B-43	ND
30A, 30B, 30C 456407, 456408, 456409	Brown Mastic	Under Black Vinyl Covebase Around Cabinets with Vents Rooms B-46, B-40 and B-43	ND
31 456410	Ceramic Floor Mastic	Women's Room, A-13	ND
32 456411	Ceramic Floor Grout	Women's Room, A-13	ND
33 456412	Ceramic Tile Wall Grout	Women's Room, A-13	ND
34 456413	Tan Interior Window Glaze	Hallway Door Assembly Near B-43	ND
35 456414	Interior Window Glaze	Window Above Door A6	ND
36A, 36B, 36C 456415, 456416, 456417	2'x2' Spline Set Ceiling Tile	Main Office Area	ND
37 456418	Black Gray Grout	Faculty Bath Floor Under Ceramic Tile	ND
38 456419	Black/Tan Mastic	Faculty Room Bathroom Floor – Under Ceramic Tile	Chrysotile – 2%
39A, 39B. 39C 456420, 456421, 456422	Ceiling Panel- Spline Set	A-Wing Hall	ND
40A, 40B, 40C 456423, 456424, 456425	Gray/Black Mastic Under Rubber Covebase	Base of B-wing Lockers	ND
41A, 41B, 41C 456426, 456427, 456428	1'x1' Gray Blue Floor Tile with Blue Mottles	B-Wing Classrooms B-39, B-43, B-44	ND
42A, 42B, 42C 456429, 456430, 456431	Black/Brown mastic	Under 1'x1' Blue-Gray Floor Tile	ND

Field ID / Laboratory ID	Description	Location	Result
43A, 43B, 43C 456432, 456433, 456434	Gray Levelastic on Concrete Floor	At Edge of outer wall B-39, B-43, B-44	ND
44 456435	Door Insulation	Inside Door A-17	ND
45 456436	Door Insulation	Inside Door B-25	ND
46 456437	Door Insulation	Inside Door B-15A	ND
47 456438	Door Insulation	Inside Door D-17	ND
48 456439	Door Insulation	Inside Door B-16	ND
49 456440	Door Insulation	Inside Door A-13	ND
50 456441	Door Insulation	Kitchen	ND
51 456442	Door Insulation	Hall Assembly Outside Kitchen	ND
52A, 52B 456647. 456648	Gray Grout	Under Floor Ceramic Tile, Boys Locker Room	ND
53A, 53B 456649, 456650	Black Mastic	Under Floor Ceramic Tile Grout, Boys Locker Room	Chrysotile – 5%
54 456651	White Window Glaze	Interior Boys Locker Room	ND
55 456652	Gray Window Glaze	Interior Door Assembly Hall near B-16	ND
56 456653	Gray-Tan Window Glaze	Interior Nurses Office	Chrysotile – 2%
57A, 57B, 57C 456654, 456655, 456656	Gray Levelastic	On Concrete Under Univent Heater, Rms. C-11, C-12, C-13	ND
58A, 58B, 58C 456657, 456658, 456659	Black Hard Mastic	Seal on Metal Door, Univent Heater, Rms. C-11, C-12, C-15	ND
59A, 59B, 59C 456660, 456661, 456662	Black Mastic	Under Red Ceramic Floor Tile in Kitchen	Chrysotile – 5%
60A, 60B 456663, 456664	Black Stone Science Table Top	Physics Room	ND
61A, 61B	Brown Glue	Under Science Table,	ND

Field ID / Laboratory ID	Description	Location	Result
456665, 456666		Physics Room	
62A, 62B 456667, 456668	Black Stone Table	Chemistry Room	ND
63A, 63B 456669, 456670	Black Stone Counter	Next to Wall, Chemistry Room	ND
64A, 64B, 64C, 64D, 64E 456671, 456672, 456673, 456674, 456675	Perforated Ceiling Panel	Cafeteria	ND
65A, 65B, 65C, 65D, 65E 456676, 456677, 456678, 456679, 456680	Black coating on Glazed CMU	Bottom walls in A, B, C and D Wings + Gym & Café Main Entrance	ND
66A, 66B 456681, 456682	Brown Glue Daubs	Behind Bulletin Boards in Nurse + Doctor's Office	ND
67A, 67B, 67C 456683, 456684, 456685	1'x1' Blue Floor Tile with Dark Blue Mottles	Cafeteria	ND
68A, 68B, 68C 456686, 456687, 456688	Black Brown Mastic	Under 1'x1' Floor Tile, Cafeteria	ND
69A, 69B, 69C 456689, 456690, 456691	1'x1' Tan Floor tile with Dark Brown Mottles	Hall Outside Locker Rooms	Chrysotile – 2%
70A, 70B, 70C 456692, 456693, 456694	Black Mastic	Under 1'x1' Tan Floor Tile, Hall Outside Locker Rooms	Chrysotile – 5%
71A, 71B, 71C 456695, 456696, 456697	Black Vinyl Covebase	Around Science Tables	ND
72A, 72B, 72C 456698, 456699, 456670	Brown Glue	Under Science Covebase	ND

ND = Not Detected
Note: Chrysotile is a common form of asbestos

The quantities for ACM detected during sampling combined with the Feasibility Study Survey and AHERA reports are provided in the attached Table 1. The laboratory analytical reports are provided in Appendix A.

As a baseline, CDW collected soil samples in areas of the crawlspace with white material on top of the soil. The results are presented in the below table. The laboratory analytical report is provided in Appendix A.

Field ID	Description	Location	Result
01A	Soil with Suspect ACM Debris	Crawlspace Near A-12	Chrysotile – <1%
02A	Soil with Suspect ACM Debris	Crawlspace Near B-11	ND
03A	Soil with Suspect ACM Debris	Crawlspace Near CL	ND
04A	Soil with Suspect ACM Debris	Crawlspace Near Fitness Center	ND
05A	Soil with Suspect ACM Debris	Crawlspace Near Cafeteria	ND
06A	Soil with Suspect ACM Debris	Crawlspace Near Boiler Room	Chrysotile – <1% Amosite - <1%
07A	Soil with Suspect ACM Debris	Crawlspace Near A-3	ND

4.3 Other Observations and Plans Review

Other observations during CDW's survey include:

- CDW removed and repaired brick from all sides of the building and within the courtyards, no mastic or coated flashing was present behind the brick and the concrete.
- No traps are connected to science sinks, there are three traps within the basement in which were opened, and no sludge was available for sampling.
- CDW Dug near the foundations on all sides of the building, and no mastic or coatings were observed on the foundations.
- Auditorium wood panels are nailed to studs that are nailed to concrete walls; thus no glue or mastic was observed.
- No mastic, paper, heat board or transite was observed behind univent heaters.
- Doors are solid wood or metal, no fireproofing observed.
- Classroom doors with windows may have had glaze at one time, but none was observed for sampling.

- The newer metal framed class wall boards do not likely have glue (none seen). Older boards with ACM gray glue are sporadically located in the building.

- The panels associated with exterior panels are metal with fiberglass insulation inside.

- CDW was not able to inspect foundation for coating with hand tools due to frost to date.

CDW reviewed architectural plans prepared by Samuel Glaser Associates, dated May 25, 1956. Some notable items include:

- Drawing A-7 and A-25 depicts a note for ¼" asbestos board tucked between two courses of block transitioning from room to hallway at door transoms in the areas within the administration and library area and D-side locker areas and cafeteria.

- Drawing A-27 shows detail stating "mastic" sandwiched between aluminum and steel door frames, however the door frames appear to be solid steel.

- Drawing A-13 shows a detail for "water proofing" under the boiler room floor slab.

- Lead coated flashing is depicted at the roof gravel stop, however this was not observed during the inspection, likely removed during roofing replacement.

A copy of these drawing sections are provided as an attachment.

4.4 Observations July 2019

- In July and August 2019, CDW monitored the removal of three section of subsurface transite pipe during site work preparation for the new school. Three sections of 10-inch diameter transite pipe runs were cut and one 10-foot section was removed from each pipe to facilitate tie-ins. The pipe sections were cut and removed under mini-containment to prevent visible emissions. A visual inspection via a third party Licensed Project Monitor was conducted to ensure no visible debris remained then air samples were collected. None of the air samples contained asbestos fibers.

- CDW inspected the exterior foundation walls for damp proofing coatings. None was observed.

- CDW inspected windows that were replaced and did not contain ACM glaze, the majority of the replacement windows are located on the maintenance/facilities side of the building.

- CDW walked the area of Room A-7 to view PCB caulk. It was determined by Framingham

Public Schools representative the caulk in question is a repair. CDW agreed since it was not found anywhere else. Also walked adjacent room, auto shop. Caulk was not evident on the beams in that room. Framingham Public Schools representative also confirmed there are no hydraulic reservoirs for lifts below the slab.

4.5 Recommendations

CDW Recommends, prior to building demolition, to carefully remove blocks under controlled conditions when the building is unoccupied to look for the asbestos board and water proofing under boiler room slab. Also inspect the foundation from the exterior for mastic in warmer weather.

ACM that will be impacted by renovation or demolition work must be removed before they are disturbed. This work must be conducted in accordance with a project design as prepared by a licensed Asbestos Abatement Project Designer. This report is not intended for use as an abatement design. Prior to disturbance, the ACM identified must be abated by a Commonwealth of Massachusetts-licensed asbestos abatement contractor following all federal, state & local regulations governing asbestos abatement. A copy of the asbestos Waste Shipment record must be received within 30 days of removal from the Site. Asbestos air quality sampling must be conducted under USEPA regulations following asbestos abatement and prior to re-occupancy of the spaces.

During the course of renovation or demolition work, it is possible that additional suspect ACM will be encountered. Contractors should be apprised to conduct any such work in a controlled manner. If suspect materials that have not been sampled are encountered, they should be assumed to contain asbestos, unless appropriate sampling and analysis indicates otherwise.

If any identified ACM will remain in place, then the ACM should be managed under an Operations and Maintenance Plan (O&M Plan) so that they are not inadvertently disturbed. The O&M Plan would include establishing a Program Manager, recordkeeping, employee and contractor notifications, periodic surveillance and training requirements.

5.0 LEAD-BASED PAINT

5.1 Methods

CDW performed a visual inspection of painted surfaces. CDW collected samples from different color paints on various types of building component substrates. Samples were submitted to EMSL Laboratories in Cinnaminson, New Jersey for analysis via atomic absorption spectrometry (AAS).

5.2 Findings

The results of the laboratory analysis are provided in the below table:

Field ID / Laboratory ID	Description	Result (% Weight)
01 201902443-01	White Paint on Concrete Wall A-7	0.011
02 201902443-02	Light Blue Paint on Door Frame Near A-3A	<0.0080
03 201902443-03	Blue Paint on Metal Door Frame Near A-10	0.2
04 201902443-04	White Paint on Concrete Block Wall Near B-16	**1.2**
05 201902443-05	Light Blue Paint on Concrete Block Wall Near B-16	0.019
06 201902443-06	Gray Paint on Floor in Custodial Closet in B Wing Near B-11	<0.0080
07 201902443-07	Yellow Paint on Column Outside B-24	0.037
08 201902443-08	White Paint on Concrete Block Near C-8	0.032
09 201902443-09	Light Blue Paint on Concrete Block near C-8	0.040
10 201902443-10	White Paint on Concrete Block Wall near Gym	**1.4**
11 201902443-11	Light Blue Paint on Concrete Block near Gym	**1.8**
12 201902443-12	Dark Blue Paint on Concrete Block Wall in Gym Wing	0.070
13 201902443-13	Blue Paint on Door Frame and Steel Truss in Cafeteria	**1.1**

The findings from the 2017 feasibility study are depicted in the below table.

Laboratory ID	Description	Result (% Weight)
LP-1A	Blue over Yellow Paint on Steel Beams	**0.69**
LP-1B	Blue over Yellow Paint on Steel Beams	0.15

Laboratory ID	Description	Result (% Weight)
LP-1C	Blue over Yellow Paint on Steel Beams	0.14
LP-1D	Blue over Yellow Paint on Steel Beams	0.079
LP-1E	Blue over Yellow Paint on Steel Beams	0.27
LP-2A	Dark Blue Over Light Blue Paint on Steel Beams	0.056
LP-2B	Dark Blue Over Light Blue Paint on Steel Beams	0.11
LP-2C	Dark Blue Over Light Blue Paint on Steel Beams	0.062
LP-2D	Dark Blue Over Light Blue Paint on Steel Beams	0.49
LP-2E	Dark Blue Over Light Blue Paint on Steel Beams	**0.51**
LP-3A	Light Blue Paint on Steel Beams	<0.0080
LP-3B	Light Blue Paint on Steel Beams	0.036
LP-3C	Light Blue Paint on Steel Beams	0.019
LP-3D	Light Blue Paint on Steel Beams	<0.011
LP-3E	Light Blue Paint on Steel Beams	<0.0080
LP-4	Gray/White Paint on Exterior CMU Near Kitchen	<0.0080
LP-5	Gray/White Paint on Exterior Window Panels	<0.0080

Bold = Lead Paint

The analytical results from 2017 and 2019 revealed that 23 of the 30 samples analyzed had detectable concentrations of lead. The USEPA defines LBP as any paint or surface coating that contains lead equal to exceeding one milligram per square centimeter (1.0 mg/cm2) or 0.5% by weight. The OSHA lead-in-construction standard defines lead containing paint (LCP) as a paint or coating containing any detectable level of lead. Based on the EPA and OSHA criteria listed above, six of the samples are LBP. These are, the white paint sampled from concrete blocks near B16, the white paint sampled from concrete blocks near the gymnasium, the light blue paint sampled from the concrete blocks near the gymnasium, blue over yellow paint on steel beams, dark blue over light blue paint on steel beams and the blue paint sampled from the door frame in the cafeteria. The laboratory analytical report is included in Attachment B.

5.3 Recommendations

Based on the conclusions of this testing, the following recommendations are offered:

- Renovation or demolition activities that disturb surfaces that contain lead must be conducted in accordance with the OSHA regulation 29 CFR 1926.62 "Lead Exposure in Construction: Interim Final Rule." This regulation requires that a site-specific health and safety plan be prepared before conducting activities that create airborne lead emissions. Such a plan should include the identification of lead components, an exposure assessment, and, if applicable, the required work procedures and personnel protection to be used. An exposure assessment in the form of personal air monitoring must be performed if there is the potential for employees to be exposed to lead due to the renovation or demolition activity. If demolition is being conducted that will disturb lead-based paints, the employer must assume that employee exposure is in excess of the Permissible Exposure Limit (PEL) of 30 micrograms per cubic meter of air (µg/m3) until the exposure assessment is completed. Handling or impacting components that are covered by LBP may require compliance with the OSHA lead standard. To minimize exposure to airborne dust or fumes, torch burning, cutting, grinding, or similar high impact work on components covered by LBP should be avoided. Such work would need to be conducted by properly trained workers using appropriate worker protection and engineering controls. For work activities that may generate airborne lead, the contractor(s) should perform an initial exposure assessment (personal air monitoring) for each individual task (e.g. demolition, abrasive blasting, and painting) that has the potential for causing worker exposure to be at or above the OSHA Action Level. In lieu of monitoring, historical data from similar operations may be used to comply with OSHA requirements.

- In addition to the worker protection requirements stipulated by OSHA, MassDEP and the USEPA regulate the disposal of wastes that are potentially hazardous. Such wastes may include paint chips and residue generated during abatement or repainting work, or whole components, such as wood windows, doors, and trim that are coated with LBP and that are disposed of as the result of renovation or demolition work. To determine the required method for disposing of permeable items coated with LBP, the MassDEP and the USEPA require representative sampling of the debris to determine the quantity of lead that would be expected to leach into the environment if the debris were disposed of in a landfill. The representative sample(s) must be analyzed by the Toxicity Characteristic Leaching Process (TCLP) to determine the proper disposal method.

- Those components/colors not tested, or in locations not inventoried in this report, should be sampled for lead content prior to disturbance that may cause airborne release of lead.

6.0 OTHER HAZARDOUS MATERIALS SURVEY

<u>OHM Visual Inspection</u>

CDW visually inspected the Site building for universal, special and hazardous wastes associated with building materials. These included but were not limited to the following:

- Mercury-containing devices (fluorescent light tubes, thermostats, gauges, etc.);
- Polychlorinated bi-phenyl (PCB)-containing articles, equipment and devices (light ballasts, electrical switches, etc.);
- Chlorofluorocarbon (CFC)-containing equipment (refrigerants, air conditioners/HVAC equipment, water bubblers, etc.)
- Tritium-containing devices (Exit signs); and
- Lead-Acid batteries (emergency lights, etc.).

6.1 Findings

PCBs in Building Materials

The results for the sampling of suspect PCB-containing materials are presented in the below table. The laboratory analytical report for PCB-containing materials at this location is included in Appendix C.

Sample ID	Description	Total PCBs (mg/kg)
PCB-1	Paint on Metal Panels Rear of School	ND
PCB-1A	Interior Steel Beam Caulk – ½ Wall Beam at Courtyard	ND
PCB-1B	Interior Steel Beam Caulk – Room B-11	ND
PCB-2	Exterior Door Caulk #9	ND
PCB-2A	Exterior Window Glaze, Cafeteria	ND
PCB-2B	Exterior Window Glaze, Cafeteria	ND
PCB-3	Interior Steel Beam Caulk, Room A-7 * Note this was determined by staff to be a repair	1300
PCB-3A	Exterior Window Glaze, A Wing	ND
PCB-3B	Exterior Window Glaze, A Wing	ND
PCB-4A	Exterior Window Glaze, B Wing	ND
PCB-4B	Exterior Window Glaze, B Wing	1.4
PCB-5A	Exterior Window Glaze, C Wing	0.49
PCB-5B	Exterior Window Glaze, C Wing	ND
PCB-6	Interior Caulk, C-10	0.51
PCB-7	Exterior Door Caulk #4	ND
PCB-8	Exterior Door Caulk #3	0.19

Sample ID	Description	Total PCBs (mg/kg)
PCB-9A	Exterior Window Caulk	0.24
PCB-9B	Exterior Window Caulk	ND
PCB-10A	Floor Tile Mastic C Wing	ND
PCB-10B	Floor Tile Mastic B Wing	ND
PCB-10C	Floor Tile Mastic A Wing	ND
PCB-10D	Floor Tile Mastic B Wing	ND

OHM

The visual survey for hazardous materials identified mercury-containing light tubes, PCB-containing light ballasts, mercury containing thermostats and switches, lead and tritium batteries, refrigerants and other hazardous materials. No hazardous materials sampling or analysis was conducted as part of this survey. A list of OHMs identified are included in the below table.

Material Description	Location	Est. Quantity	Units
Compact Fluorescent Bulbs	Throughout	200	EA
Fluorescent Bulbs (Mercury) and LED Bulbs (Arsenic and Lead)	Throughout	18,000	Tubes
Electronic Light Ballasts	Throughout	9,000	Each
Thermostats and Switches (Mercury)	Throughout, Mechanical and HVAC	150	Ampules
Emergency Light Batteries (Lead)	Throughout	80	EA
Refrigerants Associated with HVAC	Throughout	500	Gallons
Fire Extinguishers (Compressed Gas)	Throughout	150	EA
Refrigerants Associated with Water Bubblers	Throughout	25	Gallons

Material Description	Location	Est. Quantity	Units
Exit Signs (Tritium)	Throughout	150	EA
Air Conditioning Units	Sporadic, Window Mounted	25	EA
Incinerator Ash	Incinerator	1	55-Gallon Drum
Oil from Oil Pump, and Lines	Boiler Room	1	55-Gallon Drum
Chemicals (Mercury and Lead)	Acid Neutralization Tank	150	Gallons
Oil from Oil Water Separator	Automotive Shop	100	Gallons
Older Door Retractors, (Hydraulic Oil Dampers)	Exit Doors, A Wing Offices, Door Assemblies, Cafeteria, Gym, Locker Rooms, Main Offices, Bathrooms	150	EA
Welding Supplies, Gases	Maintenance Shop	--	Re-use
PCB Fluid	Old Transformer(s) – 4 Each	640	Gallons

6.2 Recommendations

The steel beam caulk in room A-7 contains PCBs in excess of the USEPA Toxic Control Substances Act (TSCA) limit of 50 mg/kg. This material and substrate has to be handled and disposed of as hazardous waste. The metal beam can be decontaminated with a hexane wash. Prior to removal, light tubes, ballasts, compact florescent bulbs, lead and tritium batteries, thermostats and switches will require proper handling, removal, transportation and off-site recycling/reclamation. Hydraulic oils from the door retractors, automobile lifts and refrigerants will require handling and disposal in accordance with regulations. Any sludge in acid tank will need to be sampled for laboratory analysis of lead and mercury via TCLP to determine proper disposal requirements. PCB fluid and oils will

also have to be sampled to determine proper disposal requirements. Laboratory chemicals, cleaners, paints etc. should be properly stored, in their original containers, and are recommended for re-use.

Limitations

The conclusions are limited to the information available at the time of the field survey and the scope of services, as defined. No subsurface soil or groundwater sampling and analysis was performed. Where access to portions of the Site or to structures on the site was unavailable or limited, CDW renders no opinion as to the presence of hazardous material or the presence of indirect evidence related to hazardous material in that portion of the site or structure. This report cannot be solely relied upon for renovation or demolition. The sampling performed forms the basis for conclusions expressed and areas inaccessible for testing limits those conclusions. No other conclusions, interpretations or recommendations are contained or implied in this report other than those expressed. While CDW followed industry standards during the inspection, we do not warrant that all suspect hazardous building materials were identified in or on the buildings and shall not be held liable related to future abatement costs related to hazardous materials that are either not discovered or not appropriately characterized. This is due in part to inherent problems with every building inspection, such as, but not limited to:

- Seemingly homogeneous materials that are not in fact homogeneous;
- Seemingly representative locations that are not in fact representative;
- Layered materials that are not uniformly present or are isolated;
- Materials that are present and accessible but were not considered to be hazardous,
- Materials that are present in an isolated and limited quantity; and
- Material that is present in locations that are unsafe or otherwise difficult to access.

Client acknowledges that CDW's inspection is limited and all hazardous materials may only become apparent during the course of future renovation or demolition. During the course of future renovation/demolition work, it is likely that additional hazardous materials or materials suspected of being hazardous will be identified. Such materials should be assumed to be hazardous unless appropriate evaluation or sampling and analysis demonstrate otherwise. No other use of this report is warranted without the written consent of CDW Consultants, Inc.

CDW appreciates the opportunity to provide our services to you on this project.

Very truly yours,

CDW CONSULTANTS, INC.

Susan Cahalan, PG, ISSP-SA
Senior Environmental Geologist

TABLES

TABLE 1
ACM Quantities
Fuller Middle School
Framingham, Massachusetts

HA No.	Material Description	Laboratory Sample No. and AHERA	NESHAP Cat.	Location	Est. Quantity	Units
1	Pipe Fittings and Insulation	AHERA and Visual	Cat. 2 Friable ACM	Behind Walls, Crawlspace etc.	17,000	LF
2	Roof Drain Insulation	AHERA and Visual	Cat. 2 Friable ACM	A-24, B-8, B-18, B-15A, B-20, B-22, B-28, B-46, C-8, C-27, C-22, C-09, C-15, D-31, D-16, D-29, D-33	450	LF
3	Gaskets	Visual	Cat I. Non Friable ACM	On Steam and Hot Water Lines and Valves, Crawlspace	250	EA
4	Round Light Gaskets	Visual	Suspect ACM, Not Sampled	Round Lights in Boiler Room Area	25	EA
5	ACM Debris on Soil	Visual	Cat. 2 Friable ACM	Dirt Floor of Crawlspace	10	CY
6	Vibration Isolators on HVAC	AHERA and Visual	Cat. 2 Non Friable ACM	Crawlspace, HV-1, HV-2, HV-3, HV-4, HV-5, HV-6, HV-7, HV-8, HV-9, HV-10, HV-11, HV-12, HV-13, HV-14, A-21, B-1A, B-26, C-13, D-9	40	EA
7	9"x9" Floor Tiles and associated Mastic	AHERA and Visual	Cat 1. Non Friable ACM	Throughout, Halls Outside Auditorium and Locker Rooms, Halls outside C-14, B-32, B-35, B-37, B-39, A-8, C-1, B-1, Select Classrooms	108,000	SF
8	12"x12" Tan With Dark Tan Mottles and Red Streaks Floor Tiles and Mastic	13A, 13B, 13C, 21A, 21B, 21C, 69A, 69B, 69C, 70A, 70B, 70C	Cat. 1 Non Friable ACM	Library, Hallway Outside Locker Rooms, C Wing Classrooms, Main Office,	35,000	SF
9	Fire Curtain	AHERA and Visual	Cat. 2 Non Friable ACM	Auditorium Stage	1	EA
10	Fiber Reinforced Paneling	AHERA and Visual	Cat. 2 Non Friable ACM	B-9 Lab Hood, D-31 Exhaust Vent, D-6 Upper Wall Vent	210	SF
11	Mastic Under Ceramic Floor Tile	38, 53A, 53B, 59A, 59B, 59C	Cat. 2 Non Friable ACM	Faculty Restroom, Boys Locker Room, Kitchen	4,800	SF
12	Slate Board Glue Daubs	7A, 7B	Cat. 2 Non Friable ACM	Classrooms, Average 1 Older Per Classroom	100	EA
13	Interior Window Glaze	1A, 1B, 1C, 9A, 9B, 9C,	Cat . 2 Non Friable ACM	At Classrooms and Hall Intersection B Classrooms, C Classrooms, D Classrooms	550	EA
14	Interior Window Glaze	8A, 8B, 10A, 10B, 10C, 11A, 11B, 11C	Cat. 2 Non Friable ACM	Fancy Wood Framed Windows at Admin Offices, "A" Offices, Library. 4x4, 8x4 and 2x4 Sections	150	EA
15	Black Sink Coating	7	Cat. 2 Non Friable ACM	Standard Sinks, B-5, Art, Nurses, Home Ec, Science, Faculty	40	EA
16	Interior White-Gray Caulk	12A, 12B, 12C, 12D, 12E, 14A, 14B, 14C	Cat. 2 Non Friable ACM	Between Steel Beams and CMU in Classrooms, Intermittent in Halls	2,800	LF
17	Interior Hard Yellow Caulk	13A, 13B, 13C, 13D, 13E,	Cat. 2 Non Friable ACM	Between Steel Beams and CMU 1/2 Wall Interior Side of Courtyard Near Main Office	320	LF
18	Black Mastic/Insulation	Visual	Suspect ACM, Not Sampled	Walk in Refrigerator and Freezer Coating	3	EA
19	Exterior Gray Window Caulk	19A, 19B, 19C, 19D, 19E, 19F, 19G	Cat. 2 Non Friable ACM	At Sides of Long Window Banks, Between Bank and Brick	300	LF
20	Exterior Window Glaze	25A, 25B, 25C, 25D, 25E, 25F, 25G	Cat. 2 Non Friable ACM	Interior of Exterior Window Banks. Each Window Defined by Aluminum Frame above Solid Steel Panel. Sizes Range From 2'x2' to 10'x6'. Majority are 6'x4'.	478	Each
21	Exterior Door Caulk	21, 22, 23	Cat. 2 Non Friable ACM	Exterior Doors	420	LF
22	Transite in Switch Gear	PACM	Cat. 2 Non Friable ACM	Switch Gear	50	SF
23	Foundation Coating	PACM	Cat. 2 Non Friable ACM	Not Seen - Contingency	7,200	SF
24	Subsurface Transite	PACM	Suspect ACM, Not Sampled	Not Seen - Contingency	2,000	LF

ACM = Asbestos Containing Material. PACM = Presumed Asbestos Containing Material. LF = Linear Foot. SF = Square Foot

FIGURES

District:	Framingham Public Schools
School Name:	Fuller Middle School
Address:	31 Flagg Drive Framingham, MA 01702

Side C

For Official Use Only

1st Floor

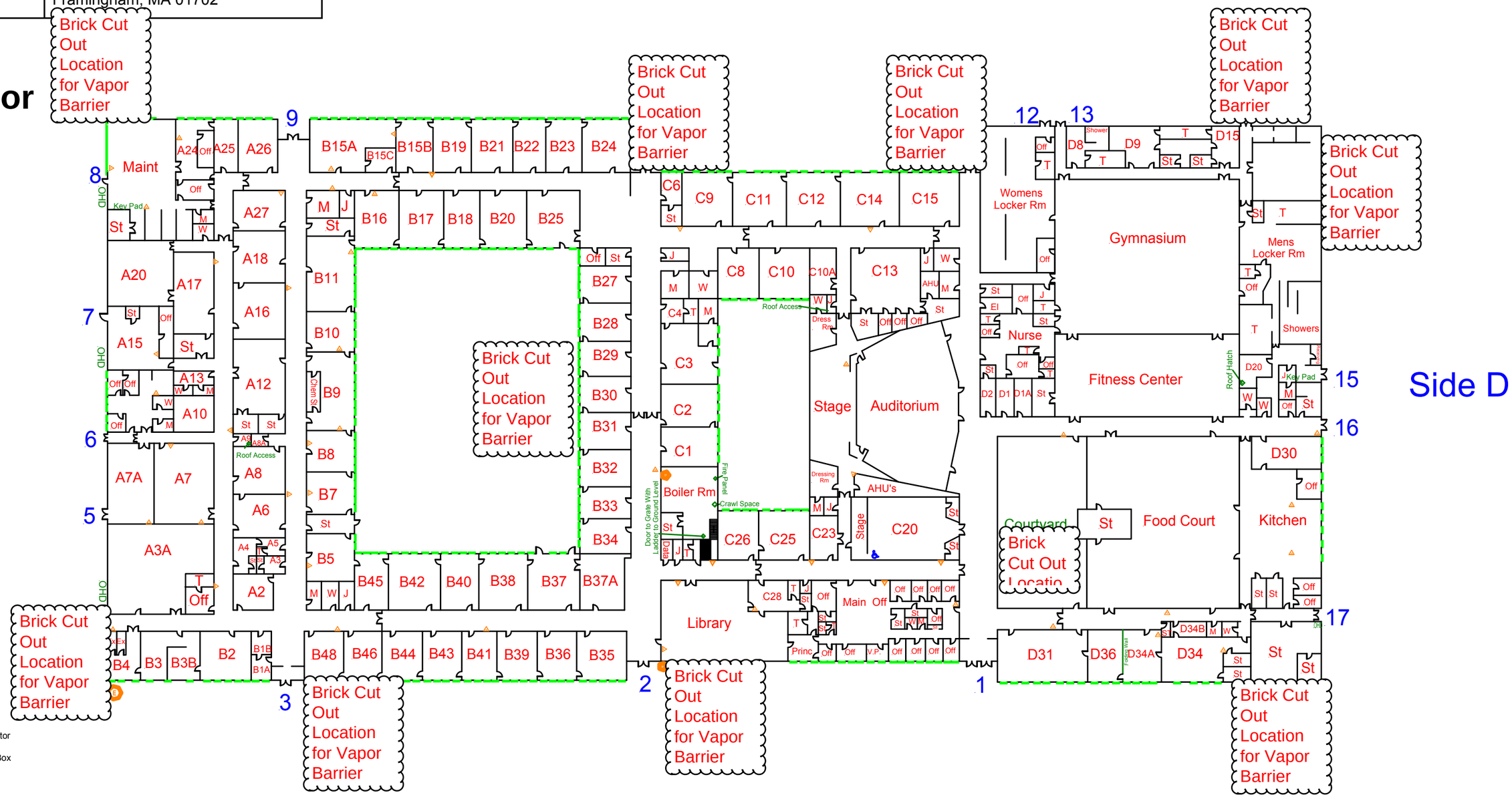

Legend

- CAM Camera
- Chair Lift
- Elevator
- W Water Shutoff
- S Sprinkler Shutoff
- E Electrical Shutoff
- G Gas Shutoff
- R Ramp
- GEN Emergency Generator
- M B Fire Alarm Master Box
- H S Halon System
- FDC Fire Dept. Connection

BE SAFE TECHNOLOGIES INC

Side A

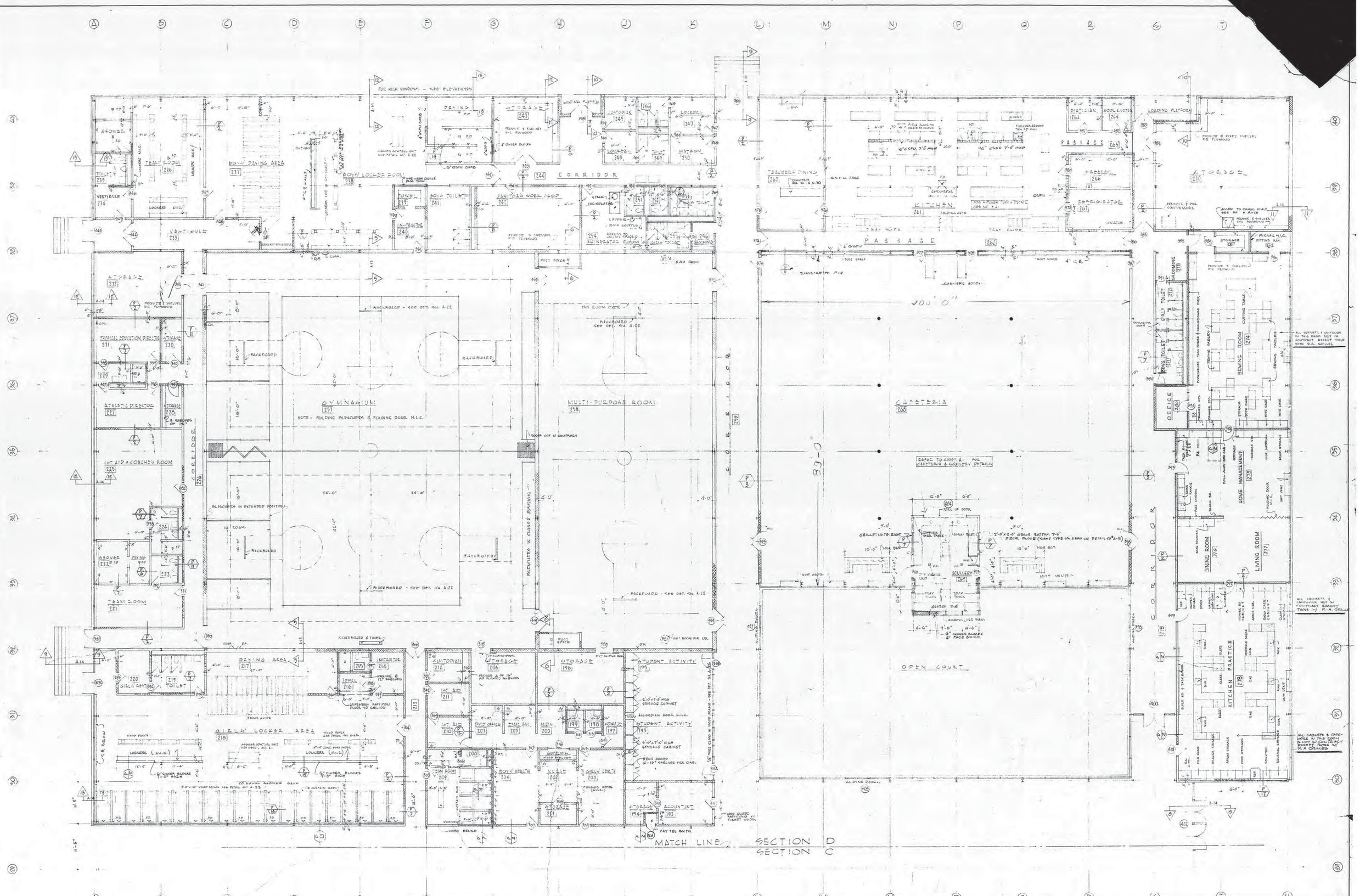

FLOOR PLAN "D"

FRAMINGHAM HIGH SCHOOL
FLAGG DRIVE
FRAMINGHAM, MASSACHUSETTS

DRAWN G.S. MAY 25 1956

CHECKED T.J.S. APPROVED

A-7

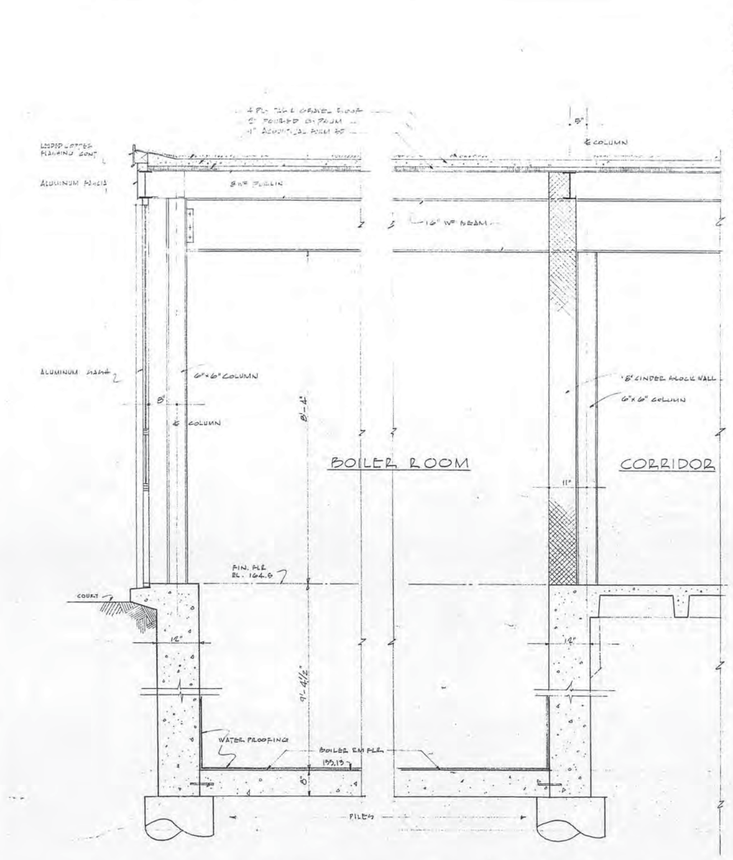

WALL SECTION 3-3 WALL SECTION 4-4

3/4" = 1'-0"

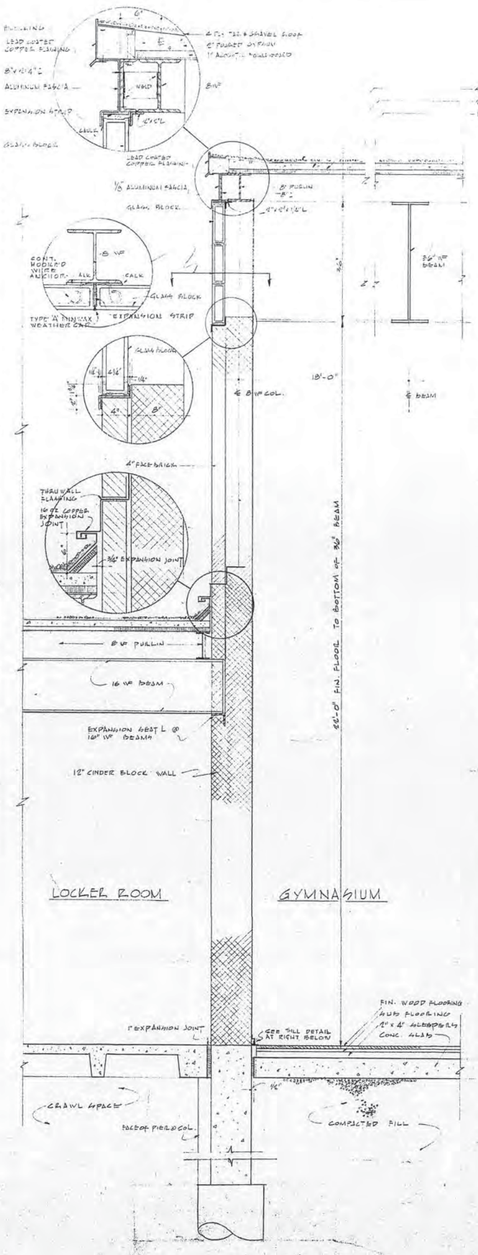

WALL SECTION 5-5

(NORTH & SOUTH WALL SIMILAR) 3/4" = 1'-0"

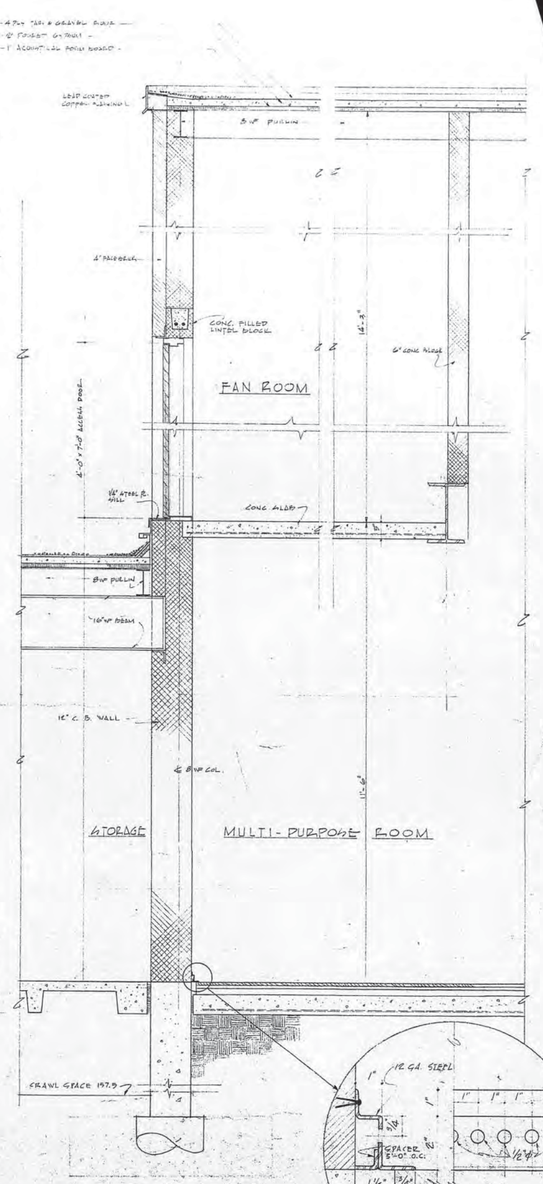

WALL SECTION 6-6

3/4" = 1'-0"

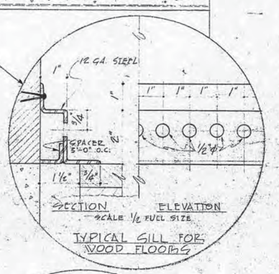

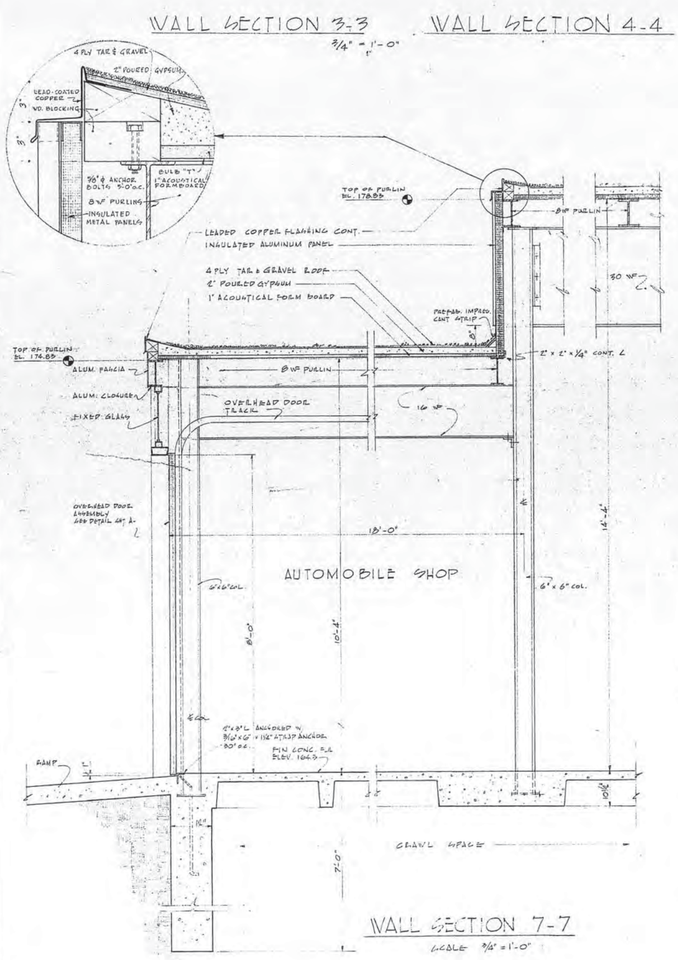

WALL SECTION 7-7

SCALE 3/4" = 1'-0"

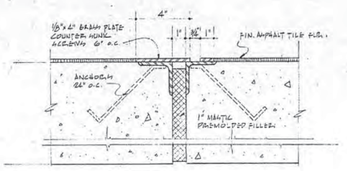

TYPICAL EXPANSION JOINT AT FLOOR SCALE 3" = 1'-0"

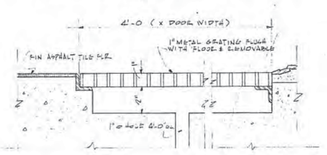

GRATING AT ENTRANCES

SCALE 3" = 1'-0"

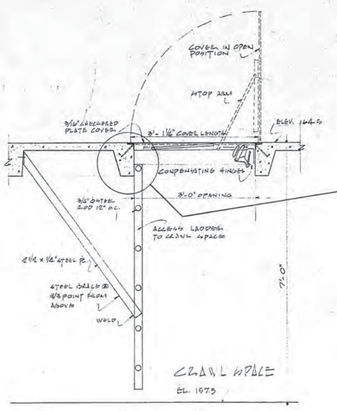

DETAIL OF ACCESS HATCH TO CRAWL SPACE SCALE 3/4" = 1'-0"

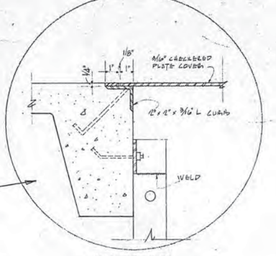

SCALE 3" = 1'-0"

TYPICAL WALL SECTIONS

FRAMINGHAM HIGH SCHOOL
FLAGG DRIVE
FRAMINGHAM, MASSACHUSETTS

REGISTERED ARCHITECT MANUEL GOMES No. 493 BOSTON, MASS.

SAMUELY, GOMES & ASSOCIATES
ARCHITECTS ENGINEERS

DRAWN BY G.P.	DATE MAY 29, 1956	JOB NO. 5600	A-13
CHECKED BY T.J.G.	APPROVED BY		

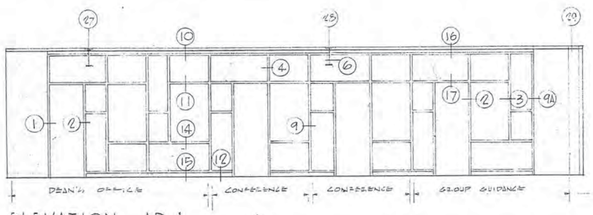

ELEVATION AD. 1 SCALE 1/4"=1'-0"

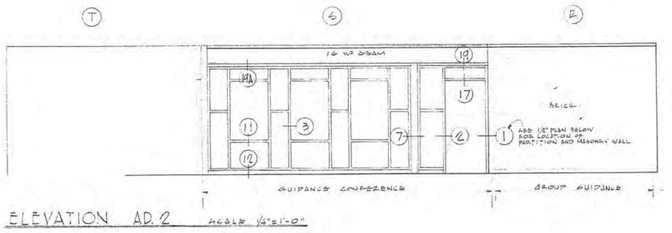

ELEVATION AD. 2 SCALE 1/4"=1'-0"

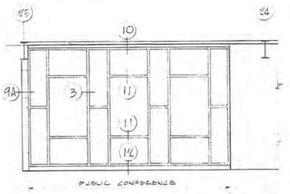

ELEVATION AD. 3 SCALE 1/4"=1'-0"

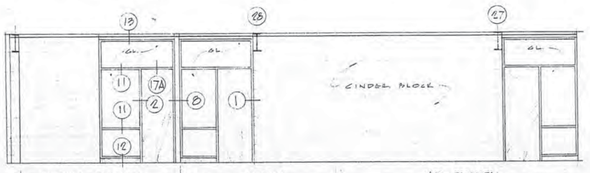

ELEVATION AD. 4 SCALE 1/4"=1'-0"

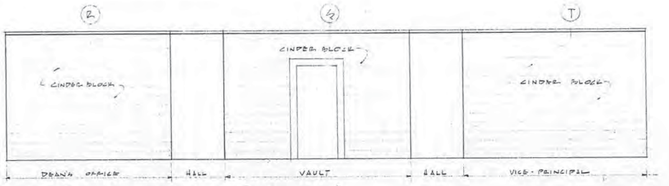

ELEVATION AD. 5 SCALE 1/4"=1'-0"

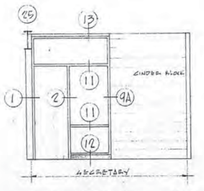

ELEVATION AD. 6 SCALE 1/4"=1'-0"

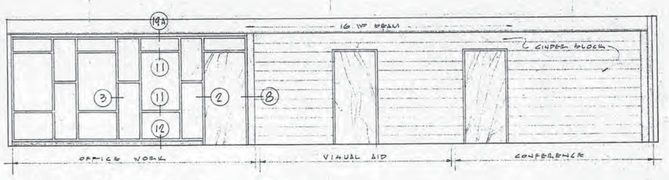

ELEVATION AD. 7 SCALE 1/4"=1'-0"

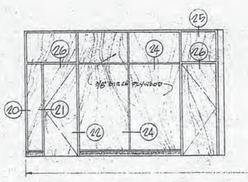

ELEVATION AD. 8 SCALE 1/4"=1'-0"

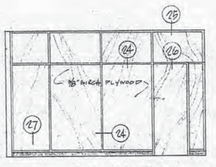

ELEVATION AD. 9 SCALE 1/4"=1'-0"

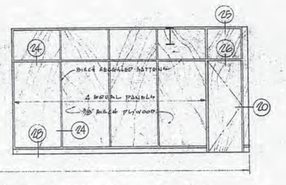

ELEVATION AD. 10 SCALE 1/4"=1'-0"

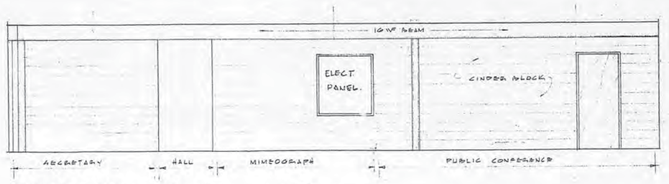

ELEVATION AD. 11 SCALE 1/4"=1'-0"

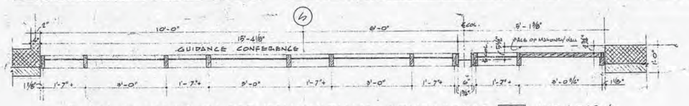

PLAN OF PARTITION BETWEEN GUIDANCE CONFERENCE 190 AND LOBBY
SCALE 1/2"=1'-0"

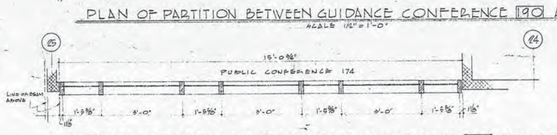

PLAN OF PARTITION BETWEEN PUBLIC CONFERENCE 174 AND CORRIDOR
SCALE 1/2"=1'-0"

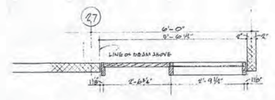

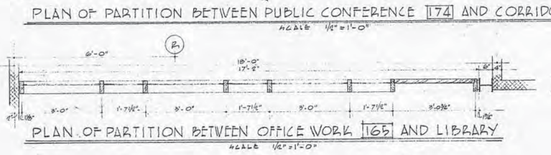

PLAN OF PARTITION BETWEEN OFFICE WORK 165 AND LIBRARY
SCALE 1/2"=1'-0"

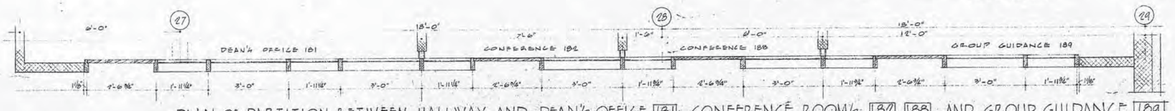

PLAN OF PARTITION BETWEEN HALLWAY AND DEAN'S OFFICE 181 CONFERENCE ROOMS 182 188 AND GROUP GUIDANCE 189
SCALE 1/2"=1'-0"

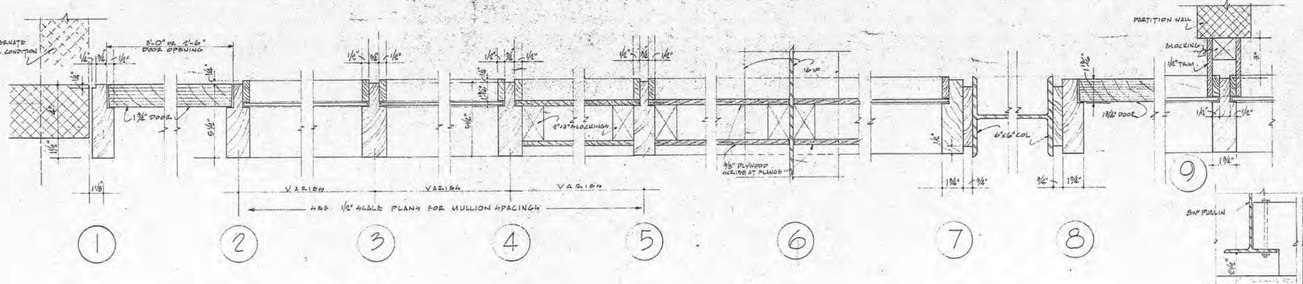

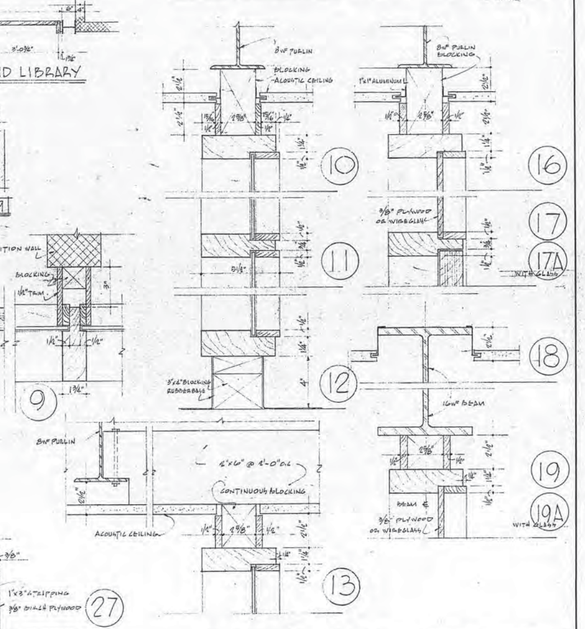

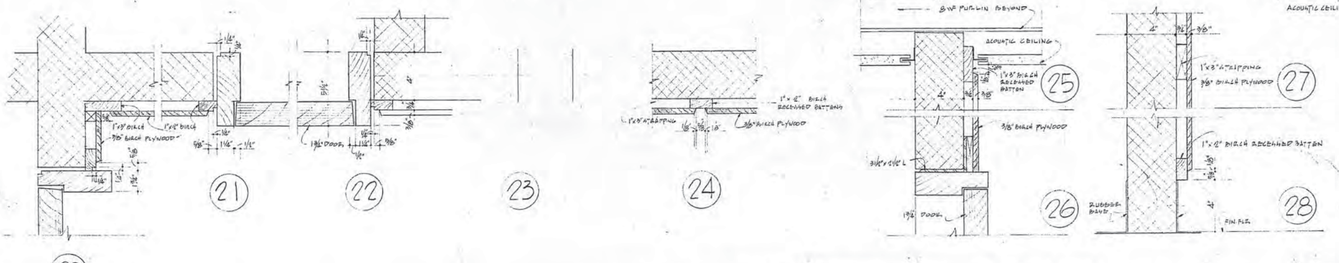

WALL SECTIONS AND DETAILS
SCALE 3"=1'-0"

INTERIOR ELEVATIONS & DETAILS
ADMINISTRATION LIBRARY AREA

FRAMINGHAM HIGH SCHOOL
FLAGG DRIVE
FRAMINGHAM, MASSACHUSETTS

REGISTERED ARCHITECT MANUEL GRAVES No. 493 BOSTON, MASS. COMMONWEALTH OF MASSACHUSETTS

DRAWN BY G.S.	DATE MAY 25, 1956	JOB No. 5608	DRAWING No. A-25
CHECKED BY T.J.S.	APPROVED BY		

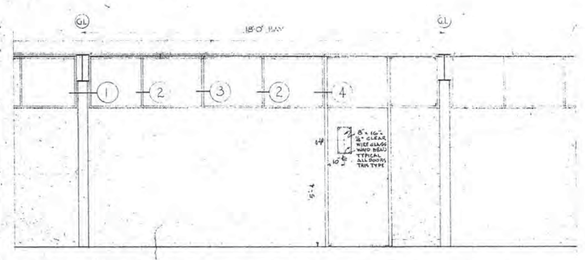

CONDITION A: BAY CONTAINING DOOLFRAME (AT EITHER END)

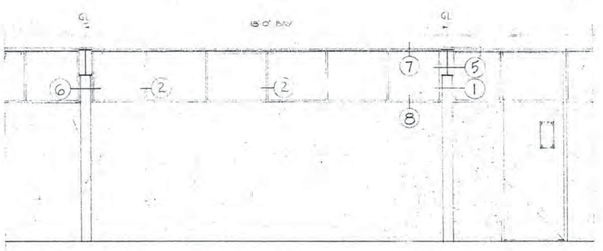

CONDITION B: BAY WITHOUT DOOLFRAME

MASONRY & GLASS PARTITIONS BETWEEN CORRIDORS AND CLASSROOMS

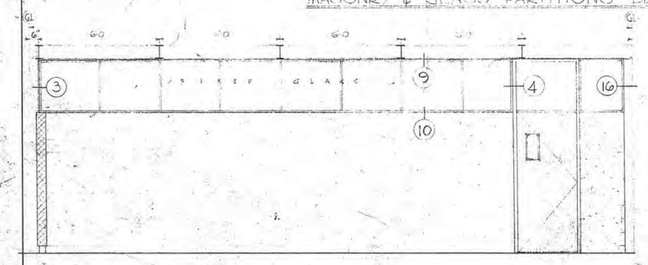

CONDITION C: PARTITION NOT ON COLUMN-LINE

PARTITION ON COLUMN-LINE

MASONRY & GLASS PARTITIONS BETWEEN CLASSROOMS

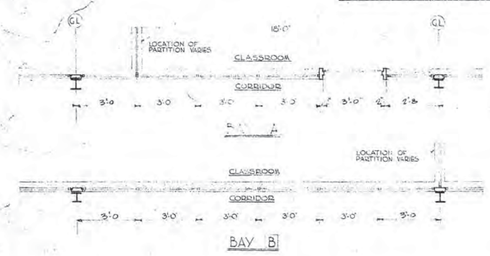

BAY B

BAY C

PLAN of PARTITION ON COLUMN LINE

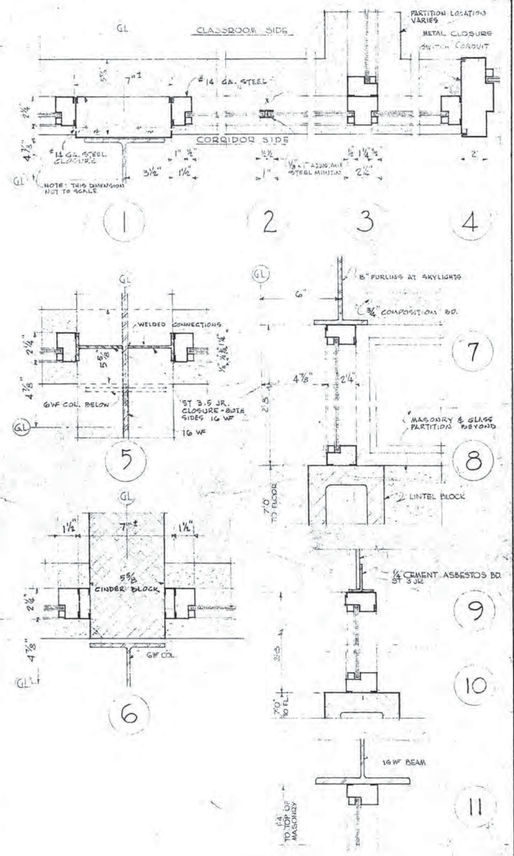

DETAILS 3"=1'-0"

MASONRY AND GLASS PARTITIONS

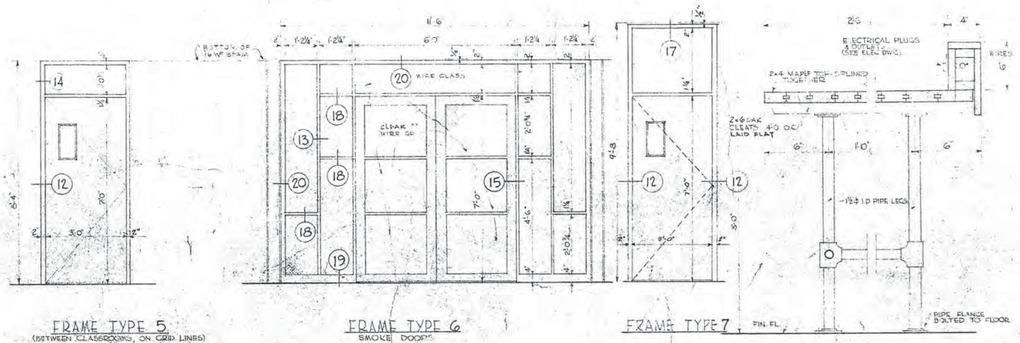

FRAME TYPE 5 (BETWEEN CLASSROOMS, ON GRID LINES)

FRAME TYPE 6 SMOKE DOORS

FRAME TYPE 7

TYPICAL ELECTRIC SHOP WORK BENCH

SCALE 3/4"=1'-0"

NOTE: ALL OTHER SHOP BENCHES SIMILAR EXCEPT WITHOUT CURB

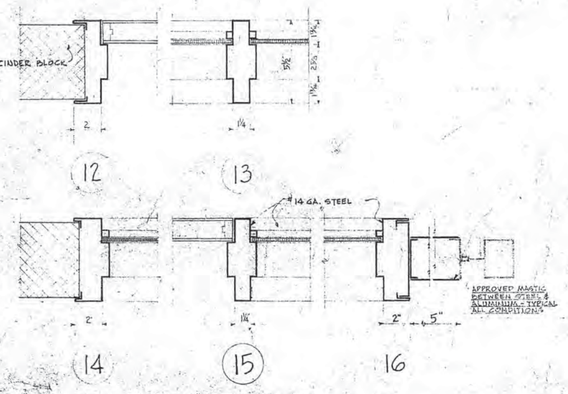

PLAN OF DOOR FRAMES

SCALE 3"=1'-0"

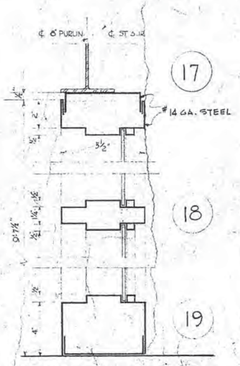

CLASSROOM DOOR FRAME DETAILS

SCALE 3"=1'-0"

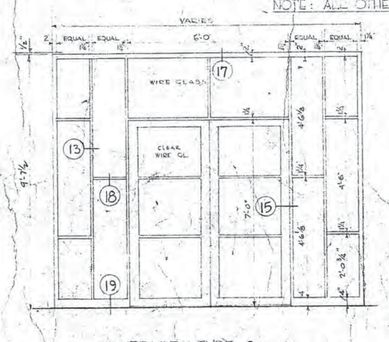

FRAME TYPE 8

SCALE 1/2"=1'-0"

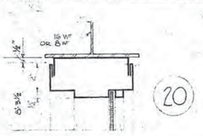

MASONRY AND GLASS PARTITIONS
CLASSROOM DOOR DETAILS

REGISTERED ARCHITECT SAMUEL GLASER No. 493 BOSTON, MASS. COMMONWEALTH OF MASSACHUSETTS

FRAMINGHAM HIGH SCHOOL
FLAGG DRIVE
FRAMINGHAM, MASSACHUSETTS

SAMUEL GLASER ASSOCIATES
ARCHITECTS • ENGINEERS
105 NEWBURY STREET • BOSTON • MASSACHUSETTS

DRAWN BY A.K.	DATE MAY 29, 1950	JOB No. 5608	DRAWING No. A-27
CHECKED BY T.J.G.	APPROVED BY		

PHOTOGRAPHS

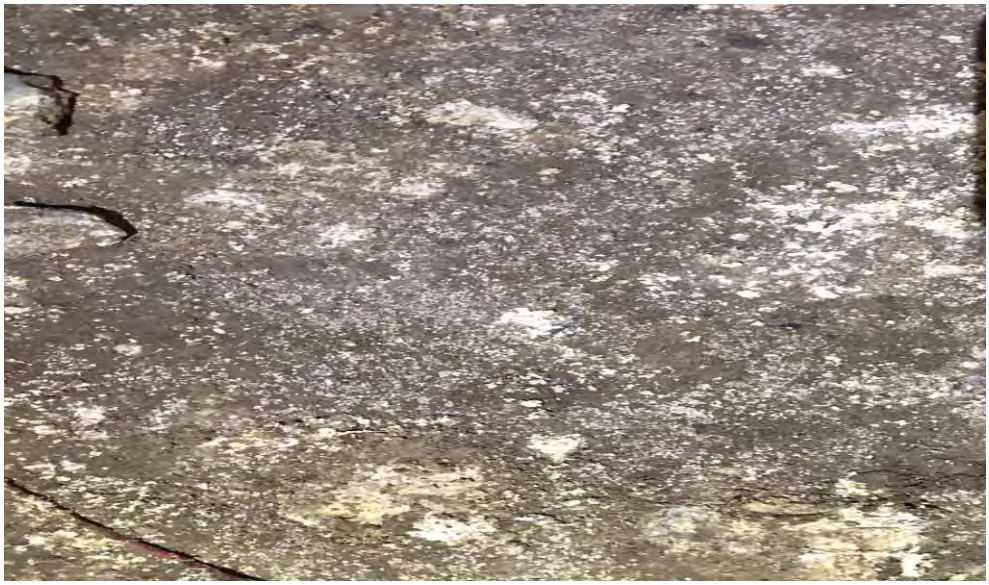

White Debris on Soil in Crawlspace

Typical ACM Pipe Fitting

ACM Pipe Insulation in Crawlspace

Transformer

Switch Gear (Typically Contain Asbestos Panels)

Roof Drain with ACM Pipe Fitting

ACM Containing 1'x1' Floor Tile Located in Hall Outside Locker Rooms, Parts of B-Wing

Door Retractors with Oils

Molded Windows with ACM Glaze

PCB-Containing Steel Beam Caulk in Wood Shop (A-7)

View Behind Brick Facade

View Behind Brick Facade

View Behind Brick Façade

APPENDIX A

Asbestos Identification Laboratory

165 New Boston St., Ste 227
Woburn, MA 01801
781-932-9600

Web: www.asbestosidentificationlab.com
Email: mikemanning@asbestosidentificationlab.com

Batch: 40607

NVLAP®
Lab Code: 200919-0

March 12, 2019

Susan Cahalan
CDW Consultants, Inc.
6 Huron Drive
Natick, MA 01760

Project Number:
Project Name: Fuller Middle School-Framingham, MA

Date Sampled: 2019-03-01
Work Received: 2019-03-06
Work Analyzed: 2019-03-08

Analysis Method: BULK PLM ANALYSIS EPA/600/R-93/116

Dear Susan Cahalan,

Asbestos Identification Laboratory has completed the analysis of the samples from your office for the above referenced project .

The information and analysis contained in this report have been generated using the EPA /600/R-93/116 Method for the Determination of Asbestos in Bulk Building Materials. Materials or products that contain more than 1% of any kind or combination of asbestos are considered an asbestos containing building material as determined by the EPA. This Polarized Light Microscope (PLM) technique may be performed either by visual estimation or point counting. Point counting provides a determination of the area percentage of asbestos in a sample. If the asbestos is estimated to be less than 10% by visual estimation of friable material, the determination may be repeated using the point counting technique. The results of the point counting supersede visual PLM results. Results in this report only relate to the items tested. This report may not be used by the customer to claim product endorsement by NVLAP or any other U.S. Government Agency.

Laboratory results represent the analysis of samples as submitted by the customer. Information regarding sample location, description, area, volume, etc., was provided by the customer. Asbestos Identification Laboratory is not responsible for sample collection activities or analytical method limitations. Unless notified in writing to return samples, Asbestos Identification Laboratory discards customer samples after 30 days. Samples containing subsamples or layers will be analyzed separately when applicable. Reports are kept at Asbestos Identification Laboratory for three years. This report shall not be reproduced, except in full, without the written consent of Asbestos Identification Laboratory.

- NVLAP Lab Code: 200919-0
- Massachusetts Certification License: AA000208
- State of Connecticut, Department of Public Health Approved Environmental Laboratory Registration Number: PH-0142
- State of Maine, Department of Environmental Protection Asbestos Analytical Laboratory License Number: LB-0078(Bulk) LA-0087(Air)
- State of Rhode Island and Providence Plantations. Department of Health Certification: AAL-121
- State of Vermont, Department of Health Environmental Health License AL934461

Thank you Susan Cahalan for your business.

Michael Manning
Owner/Director

March 12, 2019

Susan Cahalan
CDW Consultants, Inc.
6 Huron Drive
Natick, MA 01760

Project Number:
Project Name: Fuller Middle School-Framingham, MA

Date Sampled: 2019-03-01
Work Received: 2019-03-06
Work Analyzed: 2019-03-08

Analysis Method: BULK PLM ANALYSIS EPA/600/R-93/116

FieldID / LabID	Material	Location	Color	Non-Asbestos %	Asbestos %
1A / 449664	Tar Paper	Under Wood Stage	black	Cellulose 40 Non-Fibrous 60	None Detected
1B / 449665	Tar Paper	Under Wood Stage	black	Cellulose 40 Non-Fibrous 60	None Detected
1C / 449666	Tar Paper	Under Wood Stage	black	Cellulose 40 Non-Fibrous 60	None Detected
2A / 449667	Black Brown Glue	Under Tar Paper Under Stage Floor	multi	Cellulose 10 Non-Fibrous 90	None Detected
2B / 449668	Black Brown Glue	Under Tar Paper Under Stage Floor	multi	Cellulose 10 Non-Fibrous 90	None Detected
2C / 449669	Black Brown Glue	Under Tar Paper Under Stage Floor	multi	Cellulose 10 Non-Fibrous 90	None Detected
3A / 449670	Gray Paper	Under Gym Floor	black	Cellulose 40 Non-Fibrous 60	None Detected
3B / 449671	Gray Paper	Under Gym Floor	black	Cellulose 40 Non-Fibrous 60	None Detected
3C / 449672	Gray Paper	Under Gym Floor	black	Cellulose 40 Non-Fibrous 60	None Detected
4A / 449673	Black Coating	On Under Side of Gray Paper Under Gym Floor	black	Cellulose 10 Non-Fibrous 90	None Detected
4B / 449674	Black Coating	On Under Side of Gray Paper Under Gym Floor	black	Cellulose 10 Non-Fibrous 90	None Detected
4C / 449675	Black Coating	On Under Side of Gray Paper Under Gym Floor	black	Cellulose 10 Non-Fibrous 90	None Detected
5A / 449676	Black Tar	Inside Front Metal Panel-Heater Room A8	black	Non-Fibrous 100	None Detected
5B / 449677	Black Tar	Inside Front Metal Panel-Heater Room A8	black	Non-Fibrous 100	None Detected

FieldID LabID	Material	Location	Color	Non-Asbestos %	Asbestos %
6A 449678	Black-Grey Insulation	Under Heater Room A8	multi	Cellulose 5 Hair 50 Synthetic 35 Non-Fibrous 10	None Detected
6B 449679	Black-Grey Insulation	Under Heater Room A8	multi	Cellulose 5 Hair 50 Synthetic 35 Non-Fibrous 10	None Detected
Roof-1A 449680	Black Tar + Gravel	Top Layer of Roof Core	black	Cellulose 20 Non-Fibrous 80	None Detected
Roof-1B 449681	Black Felt Paper	2nd Layer of Roof Core	black	Fiberglass 30 Non-Fibrous 70	None Detected
Roof-1C 449682	Gray Paper Top + Bottom Foam	Roof Core	black	Fiberglass 10 Cellulose 50 Non-Fibrous 40	None Detected
Roof-1D 449683	Tar Paper	On Roof Deck	black	Fiberglass 15 Non-Fibrous 85	None Detected
Roof-1E 449684	Gypsum Board	Roof Deck	multi	Cellulose 5 Non-Fibrous 95	None Detected
Roof-2A 449685	Rolled Asphalt Roof	Top Layer Roof Core	multi	Fiberglass 25 Non-Fibrous 75	None Detected
Roof-2B 449686	Gray Paper	Top + Bottom Foam	black	Fiberglass 15 Cellulose 50 Non-Fibrous 35	None Detected
Roof-2C 449687	Tar Paper	Over Roof Deck	brown	Cellulose 95 Non-Fibrous 5	None Detected
Roof-2D 449688	Tar Paper	top Concrete Roof Deck	black	Fiberglass 10 Non-Fibrous 90	None Detected
Roof-3A 449689	Rolled Asphalt Roof	Gym Roof	black	Fiberglass 30 Non-Fibrous 70	None Detected
Roof-3B 449690	Black Tar Paper	Under Rolled Asphalt Roof	multi	Fiberglass 40 Non-Fibrous 60	None Detected
Roof-3C 449691	Tar-Black	On Top of Foam Roof Core	black	Fiberglass 10 Non-Fibrous 90	None Detected
Roof-3D 449692	Gray Paper	On Top of Concrete Roof Deck	black	Fiberglass 20 Non-Fibrous 80	None Detected
Roof-4A 449693	Rolled Asphalt Roof	Top Layer Roof Care	black	Fiberglass 30 Non-Fibrous 70	None Detected
Roof-4B 449694	Black Tar	Top of Foam Roof Care	black	Fiberglass 10 Non-Fibrous 90	None Detected

FieldID / LabID	Material	Location	Color	Non-Asbestos %	Asbestos %
Roof-4C / 449695	Black Grey Tar Paper	On Concrete Deck	multi	Fiberglass 30 Non-Fibrous 70	None Detected
Roof-5A / 449696	Rolled Asphalt Roof	Roof Care Top Layer	black	Fiberglass 30 Non-Fibrous 70	None Detected
Roof-5B / 449697	Black Tar Paper	Top + Bottom Roof Foam	black	Fiberglass 40 Non-Fibrous 60	None Detected
Roof-5C / 449698	Black-Grey Tar Paper	On Concrete Roof Deck	black	Fiberglass 15 Non-Fibrous 85	None Detected
Roof-6A / 449699	Black Rolled Asphalt Roof	Top Layer Roof Core	black	Fiberglass 30 Non-Fibrous 70	None Detected
Roof-6B / 449700	Gray Paper	Top + Bottom Roof Foam	black	Fiberglass 15 Cellulose 50 Non-Fibrous 35	None Detected
Roof-6C / 449701	Black-Dk Gray Paper	On Concrete Roof Deck	black	Fiberglass 15 Non-Fibrous 85	None Detected
Roof-7A / 449702	Rolled Asphalt Roof	Top Layer Roof	black	Fiberglass 30 Non-Fibrous 70	None Detected
Roof-7B / 449703	Black Tar Paper Top of Foam	Roof Core	black	Fiberglass 15 Cellulose 50 Non-Fibrous 35	None Detected
Roof-7C / 449704	Dk Grey Paper Thick	Top Concrete Deck	black	Fiberglass 15 Non-Fibrous 85	None Detected
Roof-8A / 449705	Black Glue Under Rubber	Curb Roof Cut Gym Wall	black	Non-Fibrous 100	None Detected
Roof-8B / 449706	Grey-Black Glue	Curb Cut-Off Wall of Gym	multi	Non-Fibrous 100	None Detected
Roof-8C / 449707	Asphalt Layer Over Wood	Gym Curb Cut	black	Fiberglass 30 Non-Fibrous 70	None Detected
7A / 449708	Grey Glue Daub Behind Black Board	Room A8 Older Board	gray	Non-Fibrous 70	**Detected** **Chrysotile 30**
7B / 449709	Grey Glue Daub Behind Black Board	Room A8 Older Board			Not Analyzed
8A / 449710	Brownish Gray Glue Daub	Room A16 Older Black Board	brown	Non-Fibrous 100	None Detected
8B / 449711	Brownish Gray Glue Daub	Room A16 Older Black Board	brown	Non-Fibrous 100	None Detected

Tuesday 12 March

Analyzed by:

End of Report

Batch: 40607

CHAIN OF CUSTODY

EPA/600/R-93/116

Client: CDW Consultants

Address: Le Huron Drive, Natick MA

Project Site & #: Fuller Middle School - Framingham MA

Phone / email address: scabalan@cdwconsults.com

Contact: Susan Cabalan

Relinquish by/date:

Received by/date: 3/6/19

# of Samples Received: 48

Asbestos Identification Lab
165 New Boston St.
Suite 227
Woburn, MA 01801
(781)932-9600
www.asbestosidentificationlab.com

Date Sampled: 3/1/2019

BATCH# 40607

Rev 06/16

Turnaround Time	Sample Method
☐ Less 3 Hrs	☒ Bulk
☐ Same Day	☐ Soil
☐ Next Day	☐ Wipe
☒ Two Day 4 DAY	☐ Point Count

Stop on 1st Positive? Yes/No

Notify Method: Mail/E-Mail/Verbal

Anayzed By:

Date: 3/8/19

Temp in Celsius = 25

Lab ID# (Lab Use Only)	Field ID/ (Client Reference)	Material / Location	Stereo Scope: % of Asbestos	Color	Homogeneity	Texture	Friable	Asbestos Minerals	Optical Properties: Asbestos %	Morphology	Extinction	Sign of Elongation	Birefringence	Pleochroism	RI: ∥	⊥	Non-Asbestos Percentage (%): Fiberglass	Mineral Wool	Cellulose	Hair	Synthetic	Other	Non-Fibrous
44964	1A	Material: tar paper Location: under wood & stump	0	BLK	N	Fb/G	N	Chrysotile											R				
								Amosite															
								Crocidolite															
								Tremolite											40				60
								Anthophyllite															
								Actinolite															
65	1B	Material: " Location: "	0	BLK	N	Fb/G	N	Chrysotile											R				
								Amosite															
								Crocidolite															
								Tremolite											40				60
								Anthophyllite															
								Actinolite															
66	1C	Material: " Location: "	0	BLK	N	Fb/G	N	Chrysotile											R				
								Amosite															
								Crocidolite															
								Tremolite											40				60
								Anthophyllite															
								Actinolite															

fuller

Lab ID# (Lab Use Only)	Field ID/ (Client Reference)	Temp in Celcius = ____ Material / Location	Stereo Scope: % of Asbestos	Color	Homogeneity	Texture	Friable	Asbestos Minerals	Optical Properties: Asbestos %	Morphology	Extinction	Sign of Elongation	Birefringence	Pleochroism	RI: ∥	⊥	Non-Asbestos Percentage (%): Fiberglass	Mineral Wool	Cellulose	Hair	Synthetic	Other	Non-Fibrous
67	2A	Material: Black brown glue Location: under tar paper under stage floor	0	MC	N	G	N	Chrysotile											R				
								Amosite															
								Crocidolite															
								Tremolite											10				90
								Anthophyllite															
								Actinolite															
68	2B	Material: " Location: "	0	MC	N	G	N	Chrysotile											R				
								Amosite															
								Crocidolite															
								Tremolite											10				90
								Anthophyllite															
								Actinolite															
69	2C	Material: " Location: "	0	MC	N	G	N	Chrysotile											R				
								Amosite															
								Crocidolite															
								Tremolite											10				90
								Anthophyllite															
								Actinolite															
70	3A	Material: Gray paper Location: under gym floor	0	BLK	N	Fb/G	N	Chrysotile											R				
								Amosite															
								Crocidolite															
								Tremolite											40				60
								Anthophyllite															
								Actinolite															
71	3B	Material: " Location: "	0	BLK	N	Fb/G	N	Chrysotile											R				
								Amosite															
								Crocidolite															
								Tremolite											40				60
								Anthophyllite															
								Actinolite															

fuller

Lab ID# (Lab Use Only)	Field ID/ (Client Reference)	Temp in Celcius = ____ Material / Location	Stereo Scope: % of Asbestos	Color	Homogeneity	Texture	Friable	Asbestos Minerals	Optical Properties: Asbestos %	Morphology	Extinction	Sign of Elongation	Birefringence	Pleochroism	RI: ∥	⊥	Non-Asbestos Percentage (%): Fiberglass	Mineral Wool	Cellulose	Hair	Synthetic	Other	Non-Fibrous
72	3C	Material: " Location: "	0	BLK	N	Fb/G	N	Chrysotile															
								Amosite															
								Crocidolite											R				
								Tremolite															
								Anthophyllite											40				60
								Actinolite															
73	4A	Material: Black coating Location: on underside of gym Gray paper under floor	0	BLK	N	G	N	Chrysotile															
								Amosite															
								Crocidolite											R				
								Tremolite															
								Anthophyllite											10				90
								Actinolite															
74	4B	Material: " Location: "	0	BLK	N	G	N	Chrysotile															
								Amosite															
								Crocidolite											R				
								Tremolite															
								Anthophyllite											10				90
								Actinolite															
75	4C	Material: " Location: "	0	BLK	N	G	N	Chrysotile															
								Amosite															
								Crocidolite											R				
								Tremolite															
								Anthophyllite											10				90
								Actinolite															
76	5A	Material: Black Tar Location: Inside front Heater Mech panel Room A8	0	BLK	V	~~Fb~~/G	N	Chrysotile															
								Amosite															
								Crocidolite															
								Tremolite															
								Anthophyllite															100
								Actinolite															

SJP

Filler

Lab ID# (Lab Use Only)	Field ID/ (Client Reference)	Temp in Celcius = ____ / Material / Location	Stereo Scope: % of Asbestos	Color	Homogeneity	Texture	Friable	Asbestos Minerals	Optical Properties: Asbestos %	Morphology	Extinction	Sign of Elongation	Birefringence	Pleochroism	RI: ∥	⊥	Non-Asbestos Percentage (%): Fiberglass	Mineral Wool	Cellulose	Hair	Synthetic	Other	Non-Fibrous
77	SB	Material: Black Tar Location: ~~Inside~~ front Metal panel Heater room A-10	0	BLK	Y	G	N	Chrysotile															
								Amosite															
								Crocidolite															
								Tremolite															
								Anthophyllite															
								Actinolite															100
78	6A	Material: Black-Grey insulation Location: under heater ~~Rm~~ A-8	0	MC	N	Fb/G	Y	Chrysotile															
								Amosite											R	C	C		
								Crocidolite															
								Tremolite															
								Anthophyllite											5	50	35		10
								Actinolite															
79	6B	Material: Blue gray insulation Location: under heater ~~Rm~~ A-14	0	MC	N	Fb/G	Y	Chrysotile															
								Amosite											R	C	C		
								Crocidolite															
								Tremolite															
								Anthophyllite											5	50	35		10
								Actinolite															
80	Roof-1A	Material: Black Tar + gravel Location: Top layer roof core	0	BLK	N	Fb/G	N	Chrysotile															
								Amosite															
								Crocidolite											R				
								Tremolite															
								Anthophyllite											20				80
								Actinolite															
81	Roof-1B	Material: Black felt paper Location: 2nd layer roof core	0	BLK	N	Fb/G	N	Chrysotile															
								Amosite															
								Crocidolite									I						
								Tremolite															
								Anthophyllite									30						70
								Actinolite															

Fuller

Lab ID# (Lab Use Only)	Field ID/ (Client Reference)	Temp in Celcius = ____ / Material / Location	Stereo Scope: % of Asbestos	Color	Homogeneity	Texture	Friable	Asbestos Minerals	Optical Properties: Asbestos %	Morphology	Extinction	Sign of Elongation	Birefringence	Pleochroism	RI: ∥	⊥	Non-Asbestos Percentage (%): Fiberglass	Mineral Wool	Cellulose	Hair	Synthetic	Other	Non-Fibrous
82	Roof-1C	Material: Gray paper Top+ bottom foam Location: Roof Core	0	BLK	N	G/Fb	N	Chrysotile									I	X	R				
								Amosite															
								Crocidolite															
								Tremolite									10	NQ	50				40
								Anthophyllite															
								Actinolite															
83	Roof-1D	Material: Tar paper Location: on Roof Deck	0	BLK	N	G/Fb	N	Chrysotile									I						
								Amosite															
								Crocidolite															
								Tremolite									15						85
								Anthophyllite															
								Actinolite															
84	Roof-1E	Material: Gypsum Board Location: Roof Deck	0	MC	N	Fb/G	Y	Chrysotile											R				
								Amosite															
								Crocidolite															
								Tremolite											5				95
								Anthophyllite															
								Actinolite															
85	Roof-2A	Material: Rolled Asphalt Roof Location: Top layer not core	0	MC	N	Fb/G	N	Chrysotile									I						
								Amosite															
								Crocidolite															
								Tremolite									25						75
								Anthophyllite															
								Actinolite															
86	Roof-2B	Material: Gray paper Location: Top+ Bottom foam	0	BLK	N	Fb/G	N	Chrysotile									I	i	R				
								Amosite															
								Crocidolite															
								Tremolite									15		50				35
								Anthophyllite															
								Actinolite															

SOP

Fulto

Lab ID# (Lab Use Only)	Field ID/ (Client Reference)	Temp in Celcius = ____ Material / Location	Stereo Scope: % of Asbestos	Color	Homogeneity	Texture	Friable	Asbestos Minerals	Optical Properties: Asbestos %	Morphology	Extinction	Sign of Elongation	Birefringence	Pleochroism	RI: ∥	⊥	Non-Asbestos Percentage (%): Fiberglass	Mineral Wool	Cellulose	Hair	Synthetic	Other	Non-Fibrous
87	Roof-2C	Material: Tar paper Location: over Roof Deck	0	BR	N	Fb/G	N	Chrysotile															
								Amosite											R				
								Crocidolite															
								Tremolite															
								Anthophyllite											95				5
								Actinolite															
88	Roof-2D	Material: Tar Paper Location: Top Concrete roof Deck	0	BLK	N	Fb/G	N	Chrysotile															
								Amosite									I						
								Crocidolite															
								Tremolite															
								Anthophyllite									10						90
								Actinolite															
89	Roof-3A	Material: Rolled Asphalt Roof Location: Gym Roof	0	BLK	N	Fb/G	N	Chrysotile															
								Amosite									I						
								Crocidolite															
								Tremolite															
								Anthophyllite									30						70
								Actinolite															
90	Roof-3B	Material: Black Tar paper Location: under ~~Tabled Rolled~~ (se) Asphalt Roof	0	MC	N	Fb/G	N	Chrysotile															
								Amosite									I						
								Crocidolite															
								Tremolite															
								Anthophyllite									40						60
								Actinolite															
91	Roof-3C	Material: Tar-Black Location: on Top of foam Roof core	0	BLK	Y	G	N	Chrysotile															
								Amosite									I						
								Crocidolite															
								Tremolite															
								Anthophyllite									10						90
								Actinolite															

fuller

Lab ID# (Lab Use Only)	Field ID/ (Client Reference)	Temp in Celcius = ____ Material / Location	Stereo Scope: % of Asbestos	Color	Homogeneity	Texture	Friable	Asbestos Minerals	Optical Properties: Asbestos %	Morphology	Extinction	Sign of Elongation	Birefringence	Pleochroism	RI: ∥	⊥	Non-Asbestos Percentage (%): Fiberglass	Mineral Wool	Cellulose	Hair	Synthetic	Other	Non-Fibrous
92	Roof-3D	Material: Gray Paper Location: on Top of Concrete Roof Deck.	0	BLK	N	Fb/G	N	Chrysotile															
								Amosite									I						
								Crocidolite															
								Tremolite															
								Anthophyllite									20						80
								Actinolite															
93	Roof-4A	Material: Rolled Asphalt Roof Location: Top layer roof core	0	BLK	N	Fb/G	N	Chrysotile															
								Amosite									I						
								Crocidolite															
								Tremolite															
								Anthophyllite									30						70
								Actinolite															
94	Roof-4B	Material: Black Tar Location: Top of foam roof core	0	BLK	Y	G	N	Chrysotile															
								Amosite									I						
								Crocidolite															
								Tremolite															
								Anthophyllite									10						90
								Actinolite															
95	Roof-4C	Material: Black gray tar paper Location: on Concrete Deck	0	MC	N	Fb/G	N	Chrysotile															
								Amosite									I						
								Crocidolite															
								Tremolite															
								Anthophyllite									30						70
								Actinolite															
96	Roof-5A	Material: Rolled Asphalt Roof Location: Roof Core Top layer	0	BLK	N	Fb/G	N	Chrysotile															
								Amosite									I						
								Crocidolite															
								Tremolite															
								Anthophyllite									30						70
								Actinolite															

Roof-5B

Lab ID# (Lab Use Only)	Field ID/ (Client Reference)	Temp in Celcius = ____ Material / Location	Stereo Scope: % of Asbestos	Color	Homogeneity	Texture	Friable	Asbestos Minerals	Optical Properties: Asbestos %	Morphology	Extinction	Sign of Elongation	Birefringence	Pleochroism	RI: ∥	⊥	Non-Asbestos Percentage (%): Fiberglass	Mineral Wool	Cellulose	Hair	Synthetic	Other	Non-Fibrous
97	Roof-5B	Material: Black Tar Paper Location: Top + Bottom Roof foam	0	BLK	N	Fb/G	N	Chrysotile									I						
								Amosite															
								Crocidolite															
								Tremolite															
								Anthophyllite									40						60
								Actinolite															
98	Roof-5C	Material: Black-Gray Tar Paper Location: on Concrete Roof Deck	0	BLK	N	Fb/G	N	Chrysotile									I						
								Amosite															
								Crocidolite															
								Tremolite															
								Anthophyllite									15						85
								Actinolite															
99	Roof-6A	Material: Black Rolled asphalt Roof Location: Top layer roof core	0	BLK	N	Fb/G	N	Chrysotile									I						
								Amosite															
								Crocidolite															
								Tremolite															
								Anthophyllite									30						70
								Actinolite															
449700	Roof-6B	Material: Gray Paper Location: Top + bottom roof foam	0	BLK	N	Fb/G	N	Chrysotile									I		R				
								Amosite															
								Crocidolite															
								Tremolite															
								Anthophyllite									15		50				35
								Actinolite															
01	Roof-6C	Material: Black-Dk gray Paper Location: on Concrete Roof Deck	0	BLK	N	Fb/G	N	Chrysotile									I						
								Amosite															
								Crocidolite															
								Tremolite															
								Anthophyllite									15						85
								Actinolite															

Fuller

Lab ID# (Lab Use Only)	Field ID/ (Client Reference)	Temp in Celcius = ____ Material / Location	Stereo Scope: % of Asbestos	Color	Homogeneity	Texture	Friable	Asbestos Minerals	Optical Properties: Asbestos %	Morphology	Extinction	Sign of Elongation	Birefringence	Pleochroism	RI: ∥	⊥	Non-Asbestos Percentage (%): Fiberglass	Mineral Wool	Cellulose	Hair	Synthetic	Other	Non-Fibrous
02	Roof-7A	Material: Rolled Asphalt Roof Location: Top layer roof	0	BLK	N	Fb/G	N	Chrysotile															
								Amosite															
								Crocidolite									I						
								Tremolite															
								Anthophyllite									30						70
								Actinolite															
03	Roof-7B	Material: Black Tar paper Top of foam Location: Roof core	0	BLK	N	Fb/G	N	Chrysotile															
								Amosite									I		R				
								Crocidolite															
								Tremolite															
								Anthophyllite									15		50				35
								Actinolite															
04	Roof-7C	Material: Dk grey paper Thick Location: Top Concrete Deck	0	BLK	N	Fb/G	N	Chrysotile															
								Amosite									I						
								Crocidolite															
								Tremolite															
								Anthophyllite									15						85
								Actinolite															
05	Roof-8A	Material: Black Glue under rubber Location: Curb Roof cut gym wall	0	BLK	Y	G	N	Chrysotile															
								Amosite															
								Crocidolite															
								Tremolite															
								Anthophyllite															100
								Actinolite															
06	Roof-8B	Material: Grey-black glue Location: Curb cut-off wall of gym	0	MC	N	G	N	Chrysotile															
								Amosite															
								Crocidolite															
								Tremolite															
								Anthophyllite															100
								Actinolite															

Fuller

Lab ID# (Lab Use Only)	Field ID/ (Client Reference)	Temp in Celcius = ____ Material / Location	Stereo Scope: % of Asbestos	Color	Homogeneity	Texture	Friable	Asbestos Minerals	Optical Properties: Asbestos %	Morphology	Extinction	Sign of Elongation	Birefringence	Pleochroism	RI: ∥	⊥	Non-Asbestos Percentage (%): Fiberglass	Mineral Wool	Cellulose	Hair	Synthetic	Other	Non-Fibrous
07	Roof-8C	Material: Asphalt layer over wood Location: Gym Curb Cut	0	BLK	N	Fb/G	N	Chrysotile															
								Amosite									1						
								Crocidolite															
								Tremolite															
								Anthophyllite									30						70
								Actinolite															
08	7A	Material: Grey Glue Daub behind Black Board Location: Room A6 older board	0	GY	Y	G	N	Chrysotile	30	W	P	+	L	N	1.556	1.551							
								Amosite															
								Crocidolite															
								Tremolite															
								Anthophyllite															70
								Actinolite															
09	7B	Material: " Location: "						Chrysotile															
								Amosite															
								Crocidolite															
								Tremolite															
								Anthophyllite															
								Actinolite															
10	8A	Material: Brownish Gray Glue daub Location: Rm A1e older Black board	0	BR	Y	G	N	Chrysotile															
								Amosite															
								Crocidolite															
								Tremolite															
								Anthophyllite															100
								Actinolite															
11	8B	Material: " Location: "	0	BR	Y	G	N	Chrysotile															
								Amosite															
								Crocidolite															
								Tremolite															
								Anthophyllite															100
								Actinolite															

DNA

Asbestos Identification Laboratory

165 New Boston St., Ste 227
Woburn, MA 01801
781-932-9600

Web: www.asbestosidentificationlab.com
Email: mikemanning@asbestosidentificationlab.com

Batch: 40607

NVLAP®
Lab Code: 200919-0

March 12, 2019

Susan Cahalan
CDW Consultants, Inc.
6 Huron Drive
Natick, MA 01760

Project Number:
Project Name: Fuller Middle School-Framingham, MA

Date Sampled: 2019-03-01
Work Received: 2019-03-06
Work Analyzed: 2019-03-08

Analysis Method: BULK PLM ANALYSIS EPA/600/R-93/116

Dear Susan Cahalan,

Asbestos Identification Laboratory has completed the analysis of the samples from your office for the above referenced project .

The information and analysis contained in this report have been generated using the EPA /600/R-93/116 Method for the Determination of Asbestos in Bulk Building Materials. Materials or products that contain more than 1% of any kind or combination of asbestos are considered an asbestos containing building material as determined by the EPA. This Polarized Light Microscope (PLM) technique may be performed either by visual estimation or point counting. Point counting provides a determination of the area percentage of asbestos in a sample. If the asbestos is estimated to be less than 10% by visual estimation of friable material, the determination may be repeated using the point counting technique. The results of the point counting supersede visual PLM results. Results in this report only relate to the items tested. This report may not be used by the customer to claim product endorsement by NVLAP or any other U.S. Government Agency.

Laboratory results represent the analysis of samples as submitted by the customer. Information regarding sample location, description, area, volume, etc., was provided by the customer. Asbestos Identification Laboratory is not responsible for sample collection activities or analytical method limitations. Unless notified in writing to return samples, Asbestos Identification Laboratory discards customer samples after 30 days. Samples containing subsamples or layers will be analyzed separately when applicable. Reports are kept at Asbestos Identification Laboratory for three years. This report shall not be reproduced, except in full, without the written consent of Asbestos Identification Laboratory.

- NVLAP Lab Code: 200919-0
- Massachusetts Certification License: AA000208
- State of Connecticut, Department of Public Health Approved Environmental Laboratory Registration Number: PH-0142
- State of Maine, Department of Environmental Protection Asbestos Analytical Laboratory License Number: LB-0078(Bulk) LA-0087(Air)
- State of Rhode Island and Providence Plantations. Department of Health Certification: AAL-121
- State of Vermont, Department of Health Environmental Health License AL934461

Thank you Susan Cahalan for your business.

Michael Manning
Owner/Director

March 12, 2019

Susan Cahalan
CDW Consultants, Inc.
6 Huron Drive
Natick, MA 01760

Project Number:
Project Name: Fuller Middle School-Framingham, MA

Date Sampled: 2019-03-01
Work Received: 2019-03-06
Work Analyzed: 2019-03-08

Analysis Method: BULK PLM ANALYSIS EPA/600/R-93/116

FieldID / LabID	Material	Location	Color	Non-Asbestos %	Asbestos %
1A / 449664	Tar Paper	Under Wood Stage	black	Cellulose 40 Non-Fibrous 60	None Detected
1B / 449665	Tar Paper	Under Wood Stage	black	Cellulose 40 Non-Fibrous 60	None Detected
1C / 449666	Tar Paper	Under Wood Stage	black	Cellulose 40 Non-Fibrous 60	None Detected
2A / 449667	Black Brown Glue	Under Tar Paper Under Stage Floor	multi	Cellulose 10 Non-Fibrous 90	None Detected
2B / 449668	Black Brown Glue	Under Tar Paper Under Stage Floor	multi	Cellulose 10 Non-Fibrous 90	None Detected
2C / 449669	Black Brown Glue	Under Tar Paper Under Stage Floor	multi	Cellulose 10 Non-Fibrous 90	None Detected
3A / 449670	Gray Paper	Under Gym Floor	black	Cellulose 40 Non-Fibrous 60	None Detected
3B / 449671	Gray Paper	Under Gym Floor	black	Cellulose 40 Non-Fibrous 60	None Detected
3C / 449672	Gray Paper	Under Gym Floor	black	Cellulose 40 Non-Fibrous 60	None Detected
4A / 449673	Black Coating	On Under Side of Gray Paper Under Gym Floor	black	Cellulose 10 Non-Fibrous 90	None Detected
4B / 449674	Black Coating	On Under Side of Gray Paper Under Gym Floor	black	Cellulose 10 Non-Fibrous 90	None Detected
4C / 449675	Black Coating	On Under Side of Gray Paper Under Gym Floor	black	Cellulose 10 Non-Fibrous 90	None Detected
5A / 449676	Black Tar	Inside Front Metal Panel-Heater Room A8	black	Non-Fibrous 100	None Detected
5B / 449677	Black Tar	Inside Front Metal Panel-Heater Room A8	black	Non-Fibrous 100	None Detected

FieldID LabID	Material	Location	Color	Non-Asbestos %	Asbestos %
6A 449678	Black-Grey Insulation	Under Heater Room A8	multi	Cellulose 5 Hair 50 Synthetic 35 Non-Fibrous 10	None Detected
6B 449679	Black-Grey Insulation	Under Heater Room A8	multi	Cellulose 5 Hair 50 Synthetic 35 Non-Fibrous 10	None Detected
Roof-1A 449680	Black Tar + Gravel	Top Layer of Roof Core	black	Cellulose 20 Non-Fibrous 80	None Detected
Roof-1B 449681	Black Felt Paper	2nd Layer of Roof Core	black	Fiberglass 30 Non-Fibrous 70	None Detected
Roof-1C 449682	Gray Paper Top + Bottom Foam	Roof Core	black	Fiberglass 10 Cellulose 50 Non-Fibrous 40	None Detected
Roof-1D 449683	Tar Paper	On Roof Deck	black	Fiberglass 15 Non-Fibrous 85	None Detected
Roof-1E 449684	Gypsum Board	Roof Deck	multi	Cellulose 5 Non-Fibrous 95	None Detected
Roof-2A 449685	Rolled Asphalt Roof	Top Layer Roof Core	multi	Fiberglass 25 Non-Fibrous 75	None Detected
Roof-2B 449686	Gray Paper	Top + Bottom Foam	black	Fiberglass 15 Cellulose 50 Non-Fibrous 35	None Detected
Roof-2C 449687	Tar Paper	Over Roof Deck	brown	Cellulose 95 Non-Fibrous 5	None Detected
Roof-2D 449688	Tar Paper	top Concrete Roof Deck	black	Fiberglass 10 Non-Fibrous 90	None Detected
Roof-3A 449689	Rolled Asphalt Roof	Gym Roof	black	Fiberglass 30 Non-Fibrous 70	None Detected
Roof-3B 449690	Black Tar Paper	Under Rolled Asphalt Roof	multi	Fiberglass 40 Non-Fibrous 60	None Detected
Roof-3C 449691	Tar-Black	On Top of Foam Roof Core	black	Fiberglass 10 Non-Fibrous 90	None Detected
Roof-3D 449692	Gray Paper	On Top of Concrete Roof Deck	black	Fiberglass 20 Non-Fibrous 80	None Detected
Roof-4A 449693	Rolled Asphalt Roof	Top Layer Roof Care	black	Fiberglass 30 Non-Fibrous 70	None Detected
Roof-4B 449694	Black Tar	Top of Foam Roof Care	black	Fiberglass 10 Non-Fibrous 90	None Detected

FieldID / LabID	Material	Location	Color	Non-Asbestos %	Asbestos %
Roof-4C / 449695	Black Grey Tar Paper	On Concrete Deck	multi	Fiberglass 30 Non-Fibrous 70	None Detected
Roof-5A / 449696	Rolled Asphalt Roof	Roof Care Top Layer	black	Fiberglass 30 Non-Fibrous 70	None Detected
Roof-5B / 449697	Black Tar Paper	Top + Bottom Roof Foam	black	Fiberglass 40 Non-Fibrous 60	None Detected
Roof-5C / 449698	Black-Grey Tar Paper	On Concrete Roof Deck	black	Fiberglass 15 Non-Fibrous 85	None Detected
Roof-6A / 449699	Black Rolled Asphalt Roof	Top Layer Roof Core	black	Fiberglass 30 Non-Fibrous 70	None Detected
Roof-6B / 449700	Gray Paper	Top + Bottom Roof Foam	black	Fiberglass 15 Cellulose 50 Non-Fibrous 35	None Detected
Roof-6C / 449701	Black-Dk Gray Paper	On Concrete Roof Deck	black	Fiberglass 15 Non-Fibrous 85	None Detected
Roof-7A / 449702	Rolled Asphalt Roof	Top Layer Roof	black	Fiberglass 30 Non-Fibrous 70	None Detected
Roof-7B / 449703	Black Tar Paper Top of Foam	Roof Core	black	Fiberglass 15 Cellulose 50 Non-Fibrous 35	None Detected
Roof-7C / 449704	Dk Grey Paper Thick	Top Concrete Deck	black	Fiberglass 15 Non-Fibrous 85	None Detected
Roof-8A / 449705	Black Glue Under Rubber	Curb Roof Cut Gym Wall	black	Non-Fibrous 100	None Detected
Roof-8B / 449706	Grey-Black Glue	Curb Cut-Off Wall of Gym	multi	Non-Fibrous 100	None Detected
Roof-8C / 449707	Asphalt Layer Over Wood	Gym Curb Cut	black	Fiberglass 30 Non-Fibrous 70	None Detected
7A / 449708	Grey Glue Daub Behind Black Board	Room A8 Older Board	gray	Non-Fibrous 70	**Detected** **Chrysotile 30**
7B / 449709	Grey Glue Daub Behind Black Board	Room A8 Older Board			Not Analyzed
8A / 449710	Brownish Gray Glue Daub	Room A16 Older Black Board	brown	Non-Fibrous 100	None Detected
8B / 449711	Brownish Gray Glue Daub	Room A16 Older Black Board	brown	Non-Fibrous 100	None Detected

Tuesday 12 March

Analyzed by:

End of Report

Batch: 40607

CHAIN OF CUSTODY

EPA/600/R-93/116

Client: CDW Consultants

Address: Le Huron Drive, Natick MA

Project Site & #: Fuller Middle School - Framingham MA

Phone / email address: scabalan@cdwconsults.com

Contact: Susan Cabalan

Relinquish by/date:

Received by/date: 3/6/19

# of Samples Received: 48

Asbestos Identification Lab
165 New Boston St.
Suite 227
Woburn, MA 01801
(781)932-9600
www.asbestosidentificationlab.com

Date Sampled: 3/1/2019

BATCH# 40607

Rev 06/16

Turnaround Time	Sample Method
☐ Less 3 Hrs	☒ Bulk
☐ Same Day	☐ Soil
☐ Next Day	☐ Wipe
☒ Two Day 4 DAY	☐ Point Count

Stop on 1st Positive? Yes/No

Notify Method: Mail/E-Mail/Verbal

Anayzed By:

Date: 3/8/19

Temp in Celsius = 25

Lab ID# (Lab Use Only)	Field ID/ (Client Reference)	Material / Location	Stereo Scope: % of Asbestos	Color	Homogeneity	Texture	Friable	Asbestos Minerals	Optical Properties: Asbestos %	Morphology	Extinction	Sign of Elongation	Birefringence	Pleochroism	RI: ∥	⊥	Non-Asbestos Percentage (%): Fiberglass	Mineral Wool	Cellulose	Hair	Synthetic	Other	Non-Fibrous
44964	1A	Material: tar paper Location: under wood & stump	0	BLK	N	Fb/G	N	Chrysotile											R				
								Amosite															
								Crocidolite															
								Tremolite											40				60
								Anthophyllite															
								Actinolite															
65	1B	Material: " Location: "	0	BLK	N	Fb/G	N	Chrysotile											R				
								Amosite															
								Crocidolite															
								Tremolite											40				60
								Anthophyllite															
								Actinolite															
66	1C	Material: " Location: "	0	BLK	N	Fb/G	N	Chrysotile											R				
								Amosite															
								Crocidolite															
								Tremolite											40				60
								Anthophyllite															
								Actinolite															

fuller

Lab ID# (Lab Use Only)	Field ID/ (Client Reference)	Temp in Celcius = ____ Material / Location	Stereo Scope: % of Asbestos	Color	Homogeneity	Texture	Friable	Asbestos Minerals	Optical Properties: Asbestos %	Morphology	Extinction	Sign of Elongation	Birefringence	Pleochroism	RI: ∥	⊥	Non-Asbestos Percentage (%): Fiberglass	Mineral Wool	Cellulose	Hair	Synthetic	Other	Non-Fibrous
67	2A	Material: Black brown glue Location: under tar paper under stage floor	0	MC	N	G	N	Chrysotile											R				
								Amosite															
								Crocidolite															
								Tremolite											10				90
								Anthophyllite															
								Actinolite															
68	2B	Material: " Location: "	0	MC	N	G	N	Chrysotile											R				
								Amosite															
								Crocidolite															
								Tremolite											10				90
								Anthophyllite															
								Actinolite															
69	2C	Material: " Location: "	0	MC	N	G	N	Chrysotile											R				
								Amosite															
								Crocidolite															
								Tremolite											10				90
								Anthophyllite															
								Actinolite															
70	3A	Material: Gray paper Location: under gym floor	0	BLK	N	Fb/G	N	Chrysotile											R				
								Amosite															
								Crocidolite															
								Tremolite											40				60
								Anthophyllite															
								Actinolite															
71	3B	Material: " Location: "	0	BLK	N	Fb/G	N	Chrysotile											R				
								Amosite															
								Crocidolite															
								Tremolite											40				60
								Anthophyllite															
								Actinolite															

fuller

Lab ID# (Lab Use Only)	Field ID/ (Client Reference)	Temp in Celcius = ____ Material / Location	Stereo Scope: % of Asbestos	Color	Homogeneity	Texture	Friable	Asbestos Minerals	Optical Properties: Asbestos %	Morphology	Extinction	Sign of Elongation	Birefringence	Pleochroism	RI: ∥	⊥	Non-Asbestos Percentage (%): Fiberglass	Mineral Wool	Cellulose	Hair	Synthetic	Other	Non-Fibrous
72	3C	Material: " Location: "	0	BLK	N	Fb/G	N	Chrysotile															
								Amosite															
								Crocidolite											R				
								Tremolite															
								Anthophyllite											40				60
								Actinolite															
73	4A	Material: Black coating Location: on underside of gym Gray paper under floor	0	BLK	N	G	N	Chrysotile															
								Amosite															
								Crocidolite											R				
								Tremolite															
								Anthophyllite											10				90
								Actinolite															
74	4B	Material: " Location: "	0	BLK	N	G	N	Chrysotile															
								Amosite															
								Crocidolite											R				
								Tremolite															
								Anthophyllite											10				90
								Actinolite															
75	4C	Material: " Location: "	0	BLK	N	G	N	Chrysotile															
								Amosite															
								Crocidolite											R				
								Tremolite															
								Anthophyllite											10				90
								Actinolite															
76	5A	Material: Black Tar Location: Inside front Heater Mech panel Room A8	0	BLK	V	~~Fb~~/G	N	Chrysotile															
								Amosite															
								Crocidolite															
								Tremolite															
								Anthophyllite															100
								Actinolite															

SJP

Filler

Lab ID# (Lab Use Only)	Field ID/ (Client Reference)	Temp in Celcius = ____ / Material / Location	Stereo Scope: % of Asbestos	Color	Homogeneity	Texture	Friable	Asbestos Minerals	Optical Properties: Asbestos %	Morphology	Extinction	Sign of Elongation	Birefringence	Pleochroism	RI: ∥	⊥	Non-Asbestos Percentage (%): Fiberglass	Mineral Wool	Cellulose	Hair	Synthetic	Other	Non-Fibrous
77	SB	Material: Black Tar Location: ~~Inside~~ front Metal panel Heater room A-10	0	BLK	Y	G	N	Chrysotile															
								Amosite															
								Crocidolite															
								Tremolite															
								Anthophyllite															
								Actinolite															100
78	6A	Material: Black-Grey insulation Location: under heater ~~Rm~~ A-8	0	MC	N	Fb/G	Y	Chrysotile															
								Amosite											R	C	C		
								Crocidolite															
								Tremolite															
								Anthophyllite											5	50	35		10
								Actinolite															
79	6B	Material: Blue gray insulation Location: under heater ~~Rm~~ A-14	0	MC	N	Fb/G	Y	Chrysotile															
								Amosite											R	C	C		
								Crocidolite															
								Tremolite															
								Anthophyllite											5	50	35		10
								Actinolite															
80	Roof-1A	Material: Black Tar + gravel Location: Top layer roof core	0	BLK	N	Fb/G	N	Chrysotile															
								Amosite															
								Crocidolite											R				
								Tremolite															
								Anthophyllite											20				80
								Actinolite															
81	Roof-1B	Material: Black felt paper Location: 2nd layer roof core	0	BLK	N	Fb/G	N	Chrysotile															
								Amosite															
								Crocidolite									I						
								Tremolite															
								Anthophyllite									30						70
								Actinolite															

Fuller

Lab ID# (Lab Use Only)	Field ID/ (Client Reference)	Temp in Celcius = ____ / Material / Location	Stereo Scope: % of Asbestos	Color	Homogeneity	Texture	Friable	Asbestos Minerals	Optical Properties: Asbestos %	Morphology	Extinction	Sign of Elongation	Birefringence	Pleochroism	RI: ∥	⊥	Non-Asbestos Percentage (%): Fiberglass	Mineral Wool	Cellulose	Hair	Synthetic	Other	Non-Fibrous
82	Roof-1C	Material: Gray paper Top+ bottom foam Location: Roof Core	0	BLK	N	G/Fb	N	Chrysotile									I	X	R				
								Amosite															
								Crocidolite															
								Tremolite									10	NQ	50				40
								Anthophyllite															
								Actinolite															
83	Roof-1D	Material: Tar paper Location: on Roof Deck	0	BLK	N	G/Fb	N	Chrysotile									I						
								Amosite															
								Crocidolite															
								Tremolite									15						85
								Anthophyllite															
								Actinolite															
84	Roof-1E	Material: Gypsum Board Location: Roof Deck	0	MC	N	Fb/G	Y	Chrysotile											R				
								Amosite															
								Crocidolite															
								Tremolite											5				95
								Anthophyllite															
								Actinolite															
85	Roof-2A	Material: Rolled Asphalt Roof Location: Top layer not core	0	MC	N	Fb/G	N	Chrysotile									I						
								Amosite															
								Crocidolite															
								Tremolite									25						75
								Anthophyllite															
								Actinolite															
86	Roof-2B	Material: Gray paper Location: Top+ Bottom foam	0	BLK	N	Fb/G	N	Chrysotile									I	i	R				
								Amosite															
								Crocidolite															
								Tremolite									15		50				35
								Anthophyllite															
								Actinolite															

SOP

Fulto

Lab ID# (Lab Use Only)	Field ID/ (Client Reference)	Temp in Celcius = ____ Material / Location	Stereo Scope: % of Asbestos	Color	Homogeneity	Texture	Friable	Asbestos Minerals	Optical Properties: Asbestos %	Morphology	Extinction	Sign of Elongation	Birefringence	Pleochroism	RI: ∥	⊥	Non-Asbestos Percentage (%): Fiberglass	Mineral Wool	Cellulose	Hair	Synthetic	Other	Non-Fibrous
87	Roof-2C	Material: Tar paper Location: over Roof Deck	0	BR	N	Fb/G	N	Chrysotile															
								Amosite											R				
								Crocidolite															
								Tremolite															
								Anthophyllite											95				5
								Actinolite															
88	Roof-2D	Material: Tar Paper Location: Top Concrete roof Deck	0	BLK	N	Fb/G	N	Chrysotile															
								Amosite									I						
								Crocidolite															
								Tremolite															
								Anthophyllite									10						90
								Actinolite															
89	Roof-3A	Material: Rolled Asphalt Roof Location: Gym Roof	0	BLK	N	Fb/G	N	Chrysotile															
								Amosite									I						
								Crocidolite															
								Tremolite															
								Anthophyllite									30						70
								Actinolite															
90	Roof-3B	Material: Black Tar paper Location: under ~~Tabled Rolled~~ (se) Asphalt Roof	0	MC	N	Fb/G	N	Chrysotile															
								Amosite									I						
								Crocidolite															
								Tremolite															
								Anthophyllite									40						60
								Actinolite															
91	Roof-3C	Material: Tar-Black Location: on Top of foam Roof core	0	BLK	Y	G	N	Chrysotile															
								Amosite									I						
								Crocidolite															
								Tremolite															
								Anthophyllite									10						90
								Actinolite															

fuller

Lab ID# (Lab Use Only)	Field ID/ (Client Reference)	Temp in Celcius = ____ Material / Location	Stereo Scope: % of Asbestos	Color	Homogeneity	Texture	Friable	Asbestos Minerals	Optical Properties: Asbestos %	Morphology	Extinction	Sign of Elongation	Birefringence	Pleochroism	RI: ∥	⊥	Non-Asbestos Percentage (%): Fiberglass	Mineral Wool	Cellulose	Hair	Synthetic	Other	Non-Fibrous
92	Roof-3D	Material: Gray Paper Location: on Top of Concrete Roof Deck.	0	BLK	N	Fb/G	N	Chrysotile															
								Amosite									I						
								Crocidolite															
								Tremolite															
								Anthophyllite									20						80
								Actinolite															
93	Roof-4A	Material: Rolled Asphalt Roof Location: Top layer roof core	0	BLK	N	Fb/G	N	Chrysotile															
								Amosite									I						
								Crocidolite															
								Tremolite															
								Anthophyllite									30						70
								Actinolite															
94	Roof-4B	Material: Black Tar Location: Top of foam roof core	0	BLK	Y	G	N	Chrysotile															
								Amosite									I						
								Crocidolite															
								Tremolite															
								Anthophyllite									10						90
								Actinolite															
95	Roof-4C	Material: Black gray tar paper Location: on Concrete Deck	0	MC	N	Fb/G	N	Chrysotile															
								Amosite									I						
								Crocidolite															
								Tremolite															
								Anthophyllite									30						70
								Actinolite															
96	Roof-5A	Material: Rolled Asphalt Roof Location: Roof Core Top layer	0	BLK	N	Fb/G	N	Chrysotile															
								Amosite									I						
								Crocidolite															
								Tremolite															
								Anthophyllite									30						70
								Actinolite															

Roof-5B

Lab ID# (Lab Use Only)	Field ID/ (Client Reference)	Temp in Celcius = ____ Material / Location	Stereo Scope: % of Asbestos	Color	Homogeneity	Texture	Friable	Asbestos Minerals	Optical Properties: Asbestos %	Morphology	Extinction	Sign of Elongation	Birefringence	Pleochroism	RI: ∥	⊥	Non-Asbestos Percentage (%): Fiberglass	Mineral Wool	Cellulose	Hair	Synthetic	Other	Non-Fibrous
97	Roof-5B	Material: Black Tar Paper Location: Top + Bottom Roof foam	0	BLK	N	Fb/G	N	Chrysotile									I						
								Amosite															
								Crocidolite															
								Tremolite															
								Anthophyllite									40						60
								Actinolite															
98	Roof-5C	Material: Black-Gray Tar Paper Location: on Concrete Roof Deck	0	BLK	N	Fb/G	N	Chrysotile									I						
								Amosite															
								Crocidolite															
								Tremolite															
								Anthophyllite									15						85
								Actinolite															
99	Roof-6A	Material: Black Rolled asphalt Roof Location: Top layer roof core	0	BLK	N	Fb/G	N	Chrysotile									I						
								Amosite															
								Crocidolite															
								Tremolite															
								Anthophyllite									30						70
								Actinolite															
449700	Roof-6B	Material: Gray Paper Location: Top + bottom roof foam	0	BLK	N	Fb/G	N	Chrysotile									I		R				
								Amosite															
								Crocidolite															
								Tremolite															
								Anthophyllite									15		50				35
								Actinolite															
01	Roof-6C	Material: Black-Dk gray Paper Location: on Concrete Roof Deck	0	BLK	N	Fb/G	N	Chrysotile									I						
								Amosite															
								Crocidolite															
								Tremolite															
								Anthophyllite									15						85
								Actinolite															

Fuller

Lab ID# (Lab Use Only)	Field ID/ (Client Reference)	Temp in Celcius = ____ Material / Location	Stereo Scope: % of Asbestos	Color	Homogeneity	Texture	Friable	Asbestos Minerals	Optical Properties: Asbestos %	Morphology	Extinction	Sign of Elongation	Birefringence	Pleochroism	RI: ∥	⊥	Non-Asbestos Percentage (%): Fiberglass	Mineral Wool	Cellulose	Hair	Synthetic	Other	Non-Fibrous
02	Roof-7A	Material: Rolled Asphalt Roof Location: Top layer roof	0	BLK	N	Fb/G	N	Chrysotile															
								Amosite															
								Crocidolite									I						
								Tremolite															
								Anthophyllite									30						70
								Actinolite															
03	Roof-7B	Material: Black Tar paper Top of foam Location: Roof core	0	BLK	N	Fb/G	N	Chrysotile															
								Amosite									I		R				
								Crocidolite															
								Tremolite															
								Anthophyllite									15		50				35
								Actinolite															
04	Roof-7C	Material: Dk grey paper Thick Location: Top Concrete Deck	0	BLK	N	Fb/G	N	Chrysotile															
								Amosite									I						
								Crocidolite															
								Tremolite															
								Anthophyllite									15						85
								Actinolite															
05	Roof-8A	Material: Black Glue under rubber Location: Curb Roof cut gym wall	0	BLK	Y	G	N	Chrysotile															
								Amosite															
								Crocidolite															
								Tremolite															
								Anthophyllite															100
								Actinolite															
06	Roof-8B	Material: Grey-black glue Location: Curb cut-off wall of gym	0	MC	N	G	N	Chrysotile															
								Amosite															
								Crocidolite															
								Tremolite															
								Anthophyllite															100
								Actinolite															

Fuller

Lab ID# (Lab Use Only)	Field ID/ (Client Reference)	Temp in Celcius = ____ Material / Location	Stereo Scope: % of Asbestos	Color	Homogeneity	Texture	Friable	Asbestos Minerals	Optical Properties: Asbestos %	Morphology	Extinction	Sign of Elongation	Birefringence	Pleochroism	RI: ∥	⊥	Non-Asbestos Percentage (%): Fiberglass	Mineral Wool	Cellulose	Hair	Synthetic	Other	Non-Fibrous
07	Roof-8C	Material: Asphalt layer over wood Location: Gym Curb Cut	0	BLK	N	Fb/G	N	Chrysotile															
								Amosite									1						
								Crocidolite															
								Tremolite															
								Anthophyllite									30						70
								Actinolite															
08	7A	Material: Grey Glue Daub behind Black Board Location: Room A6 older board	0	GY	Y	G	N	Chrysotile	30	W	P	+	L	N	1.556	1.551							
								Amosite															
								Crocidolite															
								Tremolite															
								Anthophyllite															70
								Actinolite															
09	7B	Material: " Location: "						Chrysotile															
								Amosite															
								Crocidolite															
								Tremolite															
								Anthophyllite															
								Actinolite															
10	8A	Material: Brownish Gray Glue daub Location: Rm A1e older Black board	0	BR	Y	G	N	Chrysotile															
								Amosite															
								Crocidolite															
								Tremolite															
								Anthophyllite															100
								Actinolite															
11	8B	Material: " Location: "	0	BR	Y	G	N	Chrysotile															
								Amosite															
								Crocidolite															
								Tremolite															
								Anthophyllite															100
								Actinolite															

DNA

Asbestos Identification Laboratory

165 New Boston St., Ste 227
Woburn, MA 01801
781-932-9600

Web: www.asbestosidentificationlab.com
Email: mikemanning@asbestosidentificationlab.com

Batch: 40715

NVLAP®
Lab Code: 200919-0

March 15, 2019

Susan Cahalan
CDW Consultants, Inc.
6 Huron Drive
Natick, MA 01760

Project Number:
Project Name: Fuller Middle School-Framingham, MA

Date Sampled: 2019-03-08
Work Received: 2019-03-12
Work Analyzed: 2019-03-14

Analysis Method: BULK PLM ANALYSIS EPA/600/R-93/116

Dear Susan Cahalan,

Asbestos Identification Laboratory has completed the analysis of the samples from your office for the above referenced project .

The information and analysis contained in this report have been generated using the EPA /600/R-93/116 Method for the Determination of Asbestos in Bulk Building Materials. Materials or products that contain more than 1% of any kind or combination of asbestos are considered an asbestos containing building material as determined by the EPA. This Polarized Light Microscope (PLM) technique may be performed either by visual estimation or point counting. Point counting provides a determination of the area percentage of asbestos in a sample. If the asbestos is estimated to be less than 10% by visual estimation of friable material, the determination may be repeated using the point counting technique. The results of the point counting supersede visual PLM results. Results in this report only relate to the items tested. This report may not be used by the customer to claim product endorsement by NVLAP or any other U.S. Government Agency.

Laboratory results represent the analysis of samples as submitted by the customer. Information regarding sample location, description, area, volume, etc., was provided by the customer. Asbestos Identification Laboratory is not responsible for sample collection activities or analytical method limitations. Unless notified in writing to return samples, Asbestos Identification Laboratory discards customer samples after 30 days. Samples containing subsamples or layers will be analyzed separately when applicable. Reports are kept at Asbestos Identification Laboratory for three years. This report shall not be reproduced, except in full, without the written consent of Asbestos Identification Laboratory.

- NVLAP Lab Code: 200919-0
- Massachusetts Certification License: AA000208
- State of Connecticut, Department of Public Health Approved Environmental Laboratory Registration Number: PH-0142
- State of Maine, Department of Environmental Protection Asbestos Analytical Laboratory License Number: LB-0078(Bulk) LA-0087(Air)
- State of Rhode Island and Providence Plantations. Department of Health Certification: AAL-121
- State of Vermont, Department of Health Environmental Health License AL934461

Thank you Susan Cahalan for your business.

Michael Manning
Owner/Director

March 15, 2019

Susan Cahalan
CDW Consultants, Inc.
6 Huron Drive
Natick, MA 01760

Project Number:
Project Name: Fuller Middle School-Framingham, MA

Date Sampled: 2019-03-08
Work Received: 2019-03-12
Work Analyzed: 2019-03-14

Analysis Method: BULK PLM ANALYSIS EPA/600/R-93/116

FieldID / LabID	Material	Location	Color	Non-Asbestos %	Asbestos %
01A / 451009	Soil with Suspect ACM Debris	Crawlspace Near A12	brown	Fiberglass 5 Non-Fibrous 95	**Detected** **Chrysotile < 1**
02A / 451010	Soil with Suspect ACM Debris	Crawlspace Near B11	brown	Fiberglass 10 Non-Fibrous 90	None Detected
03A / 451011	Soil with Suspect ACM Debris	Crawlspace Near CL	brown	Fiberglass 8 Synthetic 2 Non-Fibrous 90	None Detected
04A / 451012	Soil with Suspect ACM Debris	Near Fitness Center Crawlspace	brown	Synthetic 2 Non-Fibrous 98	None Detected
05A / 451013	Soil with Suspect ACM	Crawlspace Near Cafeteria	brown	Cellulose 5 Synthetic 5 Non-Fibrous 90	None Detected
06A / 451014	Soil with Suspect ACM	Crawlspace in Boiler Room	brown	Fiberglass 2 Cellulose 3 Non-Fibrous 95	**Detected** **Chrysotile < 1** **Amosite < 1**
07A / 451015	Soil with ACM	Crawlspace Near A3	brown	Cellulose 10 Non-Fibrous 90	None Detected

Friday 15 March 2019
Analyzed by: Michael Thomas

End of Report

Batch: 40715

DUE Friday (3/15)

CHAIN OF CUSTODY

EPA/600/R-93/116

Client: CDW Consultants
Address: 6 Huron Drive Natick MA 01760
Project Site & #: Fuller Middle School, Framingham MA
Phone / email address: scahalan@cdwconsultants.com
Contact: Susan Cahalan
Relinquish by/date: 3/11/19
Received by/date: 3/12/19
# of Samples Received: 7

Asbestos Identification Lab
165 New Boston St.
Suite 227
Woburn, MA 01801
(781)932-9600
www.asbestosidentificationlab.com

Date Sampled: 3/8/2019

BATCH# 40715

Rev 06/16

Turnaround Time: Less 3 Hrs; Same Day; Next Day; Two Day (3 Day)

Sample Method: Bulk; Soil; Wipe; Point Count

Stop on 1st Positive? Yes/No

Notify Method: Mail/E-Mail/Verbal

Anayzed By: Michael [illegible]

Date: 3/14/19

Temp in Celsius = 22

Lab ID# (Lab Use Only)	Field ID/ (Client Reference)	Material / Location	Stereo Scope: % of Asbestos	Color	Homogeneity	Texture	Friable	Asbestos Minerals	Optical Properties: Asbestos %	Morphology	Extinction	Sign of Elongation	Birefringence	Pleochroism	RI: ∥	⊥	Non-Asbestos Percentage (%): Fiberglass	Mineral Wool	Cellulose	Hair	Synthetic	Other	Non-Fibrous
451009	01A	Material: Soil with Suspect ACM Debris; Location: Crawlspace near A12	0	3R	N	any	Y	Chrysotile	Tr	W	P	+	C	N	1.536	1.550	I						95
								Amosite															
								Crocidolite															
								Tremolite															
								Anthophyllite									S						
								Actinolite															
10	02A	Material: Soil with Suspect ACM Debris; Location: Crawlspace near B11	0	3R	N	any	Y	Chrysotile															
								Amosite									I						
								Crocidolite															
								Tremolite															
								Anthophyllite									10						90
								Actinolite															
11	03A	Material: Soil with Suspect ACM debris; Location: Crawlspace near C6	0	3R	N	any	Y	Chrysotile															
								Amosite									I						
								Crocidolite															
								Tremolite															
								Anthophyllite									8				2		90
								Actinolite															

Fuller School

Lab ID# (Lab Use Only)	Field ID/ (Client Reference)	Temp in Celcius = ____ Material / Location	Stereo Scope: % of Asbestos	Color	Homogeneity	Texture	Friable	Asbestos Minerals	Optical Properties: Asbestos %	Morphology	Extinction	Sign of Elongation	Birefringence	Pleochroism	RI: ∥	⊥	Non-Asbestos Percentage (%): Fiberglass	Mineral Wool	Cellulose	Hair	Synthetic	Other	Non-Fibrous
12	04A	Material: Soil with Suspect ACM Debris Location: Near fitness center Crawlspace	0	BR	N	GRY	Y	Chrysotile															
								Amosite													C		
								Crocidolite															
								Tremolite															
								Anthophyllite													2		98
								Actinolite															
13	05A	Material: Soil with Suspect ACM Location: Crawlspace near Cafeteria	0	BR	N	GRY	Y	Chrysotile															
								Amosite											2		0		
								Crocidolite															
								Tremolite															
								Anthophyllite											5		5		90
								Actinolite															
14	06A	Material: Soil with Suspect ACM Location: Crawlspace in Boiler Room	0	BR	N	GRY	Y	Chrysotile	TR	W	P	+	L	N	1556	1550							
								Amosite	TR	S	P	+	M	N	1698	1619	I		2				
								Crocidolite															
								Tremolite															
								Anthophyllite									2		3				95
								Actinolite															
45/015	07A	Material: Soil with ACM Location: Crawlspace near A3	0	BR	N	GRY	Y	Chrysotile															
								Amosite											2				
								Crocidolite															
								Tremolite															
								Anthophyllite											10				90
								Actinolite															
		Material: Location						Chrysotile															
								Amosite															
								Crocidolite															
								Tremolite															
								Anthophyllite															
								Actinolite															

APPENDIX B

EMSL Analytical, Inc.
200 Route 130 North, Cinnaminson, NJ 08077
Phone/Fax: (856) 303-2500 / (856) 786-5974
http://www.EMSL.com cinnaminsonleadlab@emsl.com

EMSL Order:	201902443
CustomerID:	CDWC26
CustomerPO:	
ProjectID:	

Attn: **Susan Cahalan**
CDW Consultants
6 Huron Drive
Natick, MA 01760

Phone: (508) 875-2657
Fax:
Received: 03/13/19 10:00 AM
Collected: 3/8/2019

Project: **Fuller Middle School**

Test Report: Lead in Paint Chips by Flame AAS (SW 846 3050B/7000B)*

Client Sample Description	*Lab ID*	*Collected*	*Analyzed*	*Weight*	*Lead Concentration*
01	*201902443-0001*	3/8/2019	3/15/2019	0.2524 g	0.011 % wt
	Site: White Paint On Concrete Block Wall A7				
02	*201902443-0002*	3/8/2019	3/15/2019	0.2529 g	<0.0080 % wt
	Site: Light Blue Paint On Door Frame Near A3A				
03	*201902443-0003*	3/8/2019	3/15/2019	0.2567 g	0.20 % wt
	Site: Blue Paint On Metal Door Frame Near A10				
04	*201902443-0004*	3/8/2019	3/15/2019	0.2512 g	1.2 % wt
	Site: White Paint On Concrete Block Wall Near B16				
05	*201902443-0005*	3/8/2019	3/15/2019	0.2581 g	0.019 % wt
	Site: Light Blue Paint On Concrete Block Wall Near B16				
06	*201902443-0006*	3/8/2019	3/15/2019	0.2531 g	<0.0080 % wt
	Site: Gray Paint On Floor In Custodial Closet In B Wing Near B11				
07	*201902443-0007*	3/8/2019	3/15/2019	0.2532 g	0.037 % wt
	Site: Yellow Paint On Column Outside B24				
08	*201902443-0008*	3/8/2019	3/15/2019	0.2545 g	0.032 % wt
	Site: White Paint On Concrete Block Near C8				
09	*201902443-0009*	3/8/2019	3/15/2019	0.2586 g	0.040 % wt
	Site: Light Blue Paint On Concrete Block Near C8				
10	*201902443-0010*	3/8/2019	3/15/2019	0.2513 g	1.4 % wt
	Site: White Paint On Concrete Block Wall Near Gym				
11	*201902443-0011*	3/8/2019	3/15/2019	0.2531 g	1.8 % wt
	Site: Light Blue Paint On Concrete Block Near Gym				
12	*201902443-0012*	3/8/2019	3/15/2019	0.2578 g	0.070 % wt
	Site: Dark Blue Paint On Concrete Block Wall In Gym Wing				
13	*201902443-0013*	3/8/2019	3/15/2019	0.2517 g	1.1 % wt
	Site: Blue Paint On Door Frame & Steel Truss In Cafeteria				

Phillip Worby, Lead Laboratory Manager
or other approved signatory

*Analysis following Lead in Paint by EMSL SOP/Determination of Environmental Lead by FLAA. Reporting limit is 0.008 % wt based on the minimum sample weight per our SOP. Unless noted, results in this report are not blank corrected. This report relates only to the samples reported above and may not be reproduced, except in full, without written approval by EMSL. EMSL bears no responsibility for sample collection activities. Samples received in good condition unless otherwise noted. "<" (less than) result signifies that the analyte was not detected at or above the reporting limit. Measurement of uncertainty is available upon request. The QC data associated with the sample results included in this report meet the recovery and precision requirements unless specifically indicated otherwise. Definitions of modifications are available upon request.

Samples analyzed by EMSL Analytical, Inc. Cinnaminson, NJ NELAP Certifications: NJ 03036, NY 10872, PA 68-00367, AIHA-LAP, LLC ELLAP 100194, A2LA 2845.01

Initial report from 03/15/2019 16:37:14

APPENDIX C

PHOENIX
Environmental Laboratories, Inc.

Wednesday, March 27, 2019

Ms. Susan Cahalan
CDW Consultants, Inc
6 Huron Dr
Natick, MA 01760

Project ID: FULLER MIDDLE SCHOOL
SDG ID: GCC73014
Sample ID#s: CC73014 - CC73016

This laboratory is in compliance with the NELAC requirements of procedures used except where indicated.

This report contains results for the parameters tested, under the sampling conditions described on the Chain Of Custody, as received by the laboratory. This report is incomplete unless all pages indicated in the pagination at the bottom of the page are included.

All soils, solids and sludges are reported on a dry weight basis unless otherwise noted in the sample comments.

A scanned version of the COC form accompanies the analytical report and is an exact duplicate of the original.

If you are the client above and have any questions concerning this testing, please do not hesitate to contact Phoenix Client Services at ext.200. The contents of this report cannot be discussed with anyone other than the client listed above without their written consent.

Sincerely yours,

Phyllis Shiller
Laboratory Director

NELAC - #NY11301
CT Lab Registration #PH-0618
MA Lab Registration #M-CT007
ME Lab Registration #CT-007
NH Lab Registration #213693-A,B
NJ Lab Registration #CT-003
NY Lab Registration #11301
PA Lab Registration #68-03530
RI Lab Registration #63
UT Lab Registration #CT00007
VT Lab Registration #VT11301

587 East Middle Turnpike, P.O. Box 370, Manchester, CT 06040
Telephone (860) 645-1102 Fax (860) 645-0823

Environmental Laboratories, Inc.
587 East Middle Turnpike, P.O.Box 370, Manchester, CT 06045
Tel. (860) 645-1102 Fax (860) 645-0823

Sample Id Cross Reference

March 27, 2019

SDG I.D.: GCC73014

Project ID: FULLER MIDDLE SCHOOL

Client Id	Lab Id	Matrix
PCB-1	CC73014	BULK
PCB-2	CC73015	CAULK
PCB-3	CC73016	CAULK

Environmental Laboratories, Inc.
587 East Middle Turnpike, P.O.Box 370, Manchester, CT 06045
Tel. (860) 645-1102 Fax (860) 645-0823

ACCREDITED IN ACCORDANCE WITH nelac NY # 11301

SDG Comments

March 27, 2019

SDG I.D.: GCC73014

Phoenix reporting levels may exceed those referenced in the CAM protocol. Please refer to criteria sheet for comparisons to requested MCP standards.

Environmental Laboratories, Inc.
587 East Middle Turnpike, P.O.Box 370, Manchester, CT 06045
Tel. (860) 645-1102 Fax (860) 645-0823

Analysis Report

March 27, 2019

FOR: Ms. Susan Cahalan
CDW Consultants, Inc
6 Huron Dr
Natick, MA 01760

Sample Information		Custody Information		Date	Time
Matrix:	BULK	Collected by:		03/18/19	10:00
Location Code:	CDW	Received by:	CP	03/22/19	11:21
Rush Request:	Standard	Analyzed by:	see "By" below		
P.O.#:					

Laboratory Data

SDG ID: GCC73014
Phoenix ID: CC73014

Project ID: FULLER MIDDLE SCHOOL
Client ID: PCB-1

Parameter	Result	RL/ PQL	Units	Dilution	Date/Time	By	Reference
Extraction for PCB	Completed				03/22/19	XX/AK/KL	SW3540C
PCB (Soxhlet SW3540C)							
PCB-1016	ND	82	ug/Kg	1	03/25/19	SC	SW8082A
PCB-1221	ND	82	ug/Kg	1	03/25/19	SC	SW8082A
PCB-1232	ND	82	ug/Kg	1	03/25/19	SC	SW8082A
PCB-1242	ND	82	ug/Kg	1	03/25/19	SC	SW8082A
PCB-1248	ND	82	ug/Kg	1	03/25/19	SC	SW8082A
PCB-1254	ND	82	ug/Kg	1	03/25/19	SC	SW8082A
PCB-1260	ND	82	ug/Kg	1	03/25/19	SC	SW8082A
PCB-1262	ND	82	ug/Kg	1	03/25/19	SC	SW8082A
PCB-1268	ND	82	ug/Kg	1	03/25/19	SC	SW8082A
QA/QC Surrogates							
% DCBP	62		%	1	03/25/19	SC	30 - 150 %
% DCBP (Confirmation)	50		%	1	03/25/19	SC	30 - 150 %
% TCMX	46		%	1	03/25/19	SC	30 - 150 %
% TCMX (Confirmation)	36		%	1	03/25/19	SC	30 - 150 %

Project ID: FULLER MIDDLE SCHOOL
Client ID: PCB-1

Phoenix I.D.: CC73014

Parameter	Result	RL/ PQL	Units	Dilution	Date/Time	By	Reference

Massachusetts does not offer certification for Soil/Solid matrices.

RL/PQL=Reporting/Practical Quantitation Level ND=Not Detected BRL=Below Reporting Level
QA/QC Surrogates: Surrogates are compounds (preceeded with a %) added by the lab to determine analysis efficiency. Surrogate results(%) listed in the report are not "detected" compounds.

Comments:

Results are reported on an ``as received`` basis, and are not corrected for dry weight.

PCB Comment:
Sample was evaluated against an external standard.

All soils, solids and sludges are reported on a dry weight basis unless otherwise noted in the sample comments.

If you are the client above and have any questions concerning this testing, please do not hesitate to contact Phoenix Client Services at ext.200.
The contents of this report cannot be discussed with anyone other than the client listed above without their written consent.

Phyllis Shiller, Laboratory Director
March 27, 2019
Reviewed and Released by: Rashmi Makol, Project Manager

Environmental Laboratories, Inc.
587 East Middle Turnpike, P.O.Box 370, Manchester, CT 06045
Tel. (860) 645-1102 Fax (860) 645-0823

Analysis Report

March 27, 2019

FOR: Ms. Susan Cahalan
CDW Consultants, Inc
6 Huron Dr
Natick, MA 01760

Sample Information		Custody Information		Date	Time
Matrix:	CAULK	Collected by:		03/18/19	10:30
Location Code:	CDW	Received by:	CP	03/22/19	11:21
Rush Request:	Standard	Analyzed by:	see "By" below		
P.O.#:					

Laboratory Data

SDG ID: GCC73014
Phoenix ID: CC73015

Project ID: FULLER MIDDLE SCHOOL
Client ID: PCB-2

Parameter	Result	RL/ PQL	Units	Dilution	Date/Time	By	Reference
Caulk Extraction for PCB	Completed				03/22/19	XX/AK/KL	SW3540C
PCB (Soxhlet SW3540C)							
PCB-1016	ND	79	ug/Kg	1	03/27/19	SC	SW8082A
PCB-1221	ND	79	ug/Kg	1	03/27/19	SC	SW8082A
PCB-1232	ND	79	ug/Kg	1	03/27/19	SC	SW8082A
PCB-1242	ND	79	ug/Kg	1	03/27/19	SC	SW8082A
PCB-1248	ND	79	ug/Kg	1	03/27/19	SC	SW8082A
PCB-1254	ND	79	ug/Kg	1	03/27/19	SC	SW8082A
PCB-1260	ND	79	ug/Kg	1	03/27/19	SC	SW8082A
PCB-1262	ND	79	ug/Kg	1	03/27/19	SC	SW8082A
PCB-1268	ND	79	ug/Kg	1	03/27/19	SC	SW8082A
QA/QC Surrogates							
% DCBP	60		%	1	03/27/19	SC	30 - 150 %
% DCBP (Confirmation)	63		%	1	03/27/19	SC	30 - 150 %
% TCMX	42		%	1	03/27/19	SC	30 - 150 %
% TCMX (Confirmation)	40		%	1	03/27/19	SC	30 - 150 %

Project ID: FULLER MIDDLE SCHOOL
Client ID: PCB-2

Phoenix I.D.: CC73015

Parameter	Result	RL/ PQL	Units	Dilution	Date/Time	By	Reference

Massachusetts does not offer certification for Soil/Solid matrices.

RL/PQL=Reporting/Practical Quantitation Level ND=Not Detected BRL=Below Reporting Level
QA/QC Surrogates: Surrogates are compounds (preceeded with a %) added by the lab to determine analysis efficiency. Surrogate results(%) listed in the report are not "detected" compounds.

Comments:

Results are reported on an ``as received`` basis, and are not corrected for dry weight.

All soils, solids and sludges are reported on a dry weight basis unless otherwise noted in the sample comments.

If you are the client above and have any questions concerning this testing, please do not hesitate to contact Phoenix Client Services at ext.200.
The contents of this report cannot be discussed with anyone other than the client listed above without their written consent.

Phyllis Shiller, Laboratory Director
March 27, 2019
Reviewed and Released by: Rashmi Makol, Project Manager

Environmental Laboratories, Inc.
587 East Middle Turnpike, P.O.Box 370, Manchester, CT 06045
Tel. (860) 645-1102 Fax (860) 645-0823

Analysis Report

March 27, 2019

FOR: Ms. Susan Cahalan
CDW Consultants, Inc
6 Huron Dr
Natick, MA 01760

Sample Information		Custody Information		Date	Time
Matrix:	CAULK	Collected by:		03/18/19	11:00
Location Code:	CDW	Received by:	CP	03/22/19	11:21
Rush Request:	Standard	Analyzed by:	see "By" below		
P.O.#:					

Laboratory Data

SDG ID: GCC73014
Phoenix ID: CC73016

Project ID: FULLER MIDDLE SCHOOL
Client ID: PCB-3

Parameter	Result		RL/ PQL	Units	Dilution	Date/Time	By	Reference	
Caulk Extraction for PCB	Completed					03/22/19	XX/AK/KL	SW3540C	
PCB (Soxhlet SW3540C)									
PCB-1016	ND		150	ug/Kg	1	03/26/19	SC	SW8082A	
PCB-1221	ND		150	ug/Kg	1	03/26/19	SC	SW8082A	
PCB-1232	ND		150	ug/Kg	1	03/26/19	SC	SW8082A	
PCB-1242	ND		150	ug/Kg	1	03/26/19	SC	SW8082A	
PCB-1248	*	*	150	ug/Kg	1	03/26/19	SC	SW8082A	
PCB-1254	1300	*	150	ug/Kg	1	03/26/19	SC	SW8082A	
PCB-1260	ND		150	ug/Kg	1	03/26/19	SC	SW8082A	
PCB-1262	ND		150	ug/Kg	1	03/26/19	SC	SW8082A	
PCB-1268	*	*	150	ug/Kg	1	03/26/19	SC	SW8082A	
QA/QC Surrogates									
% DCBP	37			%	1	03/26/19	SC	30 - 150 %	
% DCBP (Confirmation)	36			%	1	03/26/19	SC	30 - 150 %	
% TCMX	30			%	1	03/26/19	SC	30 - 150 %	
% TCMX (Confirmation)	23			%	1	03/26/19	SC	30 - 150 %	3

Project ID: FULLER MIDDLE SCHOOL

Client ID: PCB-3

Phoenix I.D.: CC73016

Parameter	Result	RL/ PQL	Units	Dilution	Date/Time	By	Reference

3 = This parameter exceeds laboratory specified limits.
Massachusetts does not offer certification for Soil/Solid matrices.

RL/PQL=Reporting/Practical Quantitation Level ND=Not Detected BRL=Below Reporting Level
QA/QC Surrogates: Surrogates are compounds (preceeded with a %) added by the lab to determine analysis efficiency. Surrogate results(%) listed in the report are not "detected" compounds.

Comments:

Results are reported on an ``as received`` basis, and are not corrected for dry weight.

PCB Comment:
* For PCBs, as per section 11.9.3 of SW846 method 8082, when multiple Aroclor's of PCBs are present and the aroclor is no longer recognizable, quantitation may be performed by comparing the total area of the PCB pattern to that of the aroclor it mostly resembles. The PCB pattern did not resemble any of the standards, but most closely resembles a mixture of the Aroclors 1248 and 1254 and 1268. The PCB is quantitated as a timed group and is reported as the Aroclor 1254.

All soils, solids and sludges are reported on a dry weight basis unless otherwise noted in the sample comments.

If you are the client above and have any questions concerning this testing, please do not hesitate to contact Phoenix Client Services at ext.200.
The contents of this report cannot be discussed with anyone other than the client listed above without their written consent.

Phyllis Shiller, Laboratory Director

March 27, 2019

Reviewed and Released by: Rashmi Makol, Project Manager

Environmental Laboratories, Inc.
587 East Middle Turnpike, P.O.Box 370, Manchester, CT 06045
Tel. (860) 645-1102 Fax (860) 645-0823

QA/QC Report

March 27, 2019

QA/QC Data

SDG I.D.: GCC73014

Parameter	Blank	Blk RL	LCS %	LCSD %	LCS RPD	MS %	MSD %	MS RPD	% Rec Limits	% RPD Limits
QA/QC Batch 471478 (ug/Kg), QC Sample No: CC71500 10X (CC73014, CC73015, CC73016)										
Polychlorinated Biphenyls - Bulk										
PCB-1016	ND	170	87						40 - 140	30
PCB-1221	ND	170							40 - 140	30
PCB-1232	ND	170							40 - 140	30
PCB-1242	ND	170							40 - 140	30
PCB-1248	ND	170							40 - 140	30
PCB-1254	ND	170							40 - 140	30
PCB-1260	ND	170	89						40 - 140	30
PCB-1262	ND	170							40 - 140	30
PCB-1268	ND	170							40 - 140	30
% DCBP (Surrogate Rec)	89	%	94						30 - 150	30
% DCBP (Surrogate Rec) (Confirm	95	%	99						30 - 150	30
% TCMX (Surrogate Rec)	71	%	82						30 - 150	30
% TCMX (Surrogate Rec) (Confirm	74	%	86						30 - 150	30

Comment:

The LCSD was lost during extraction, this batch consists of a Blank and LCS.

If there are any questions regarding this data, please call Phoenix Client Services at extension 200.

RPD - Relative Percent Difference
LCS - Laboratory Control Sample
LCSD - Laboratory Control Sample Duplicate
MS - Matrix Spike
MS Dup - Matrix Spike Duplicate
NC - No Criteria
Intf - Interference

Phyllis Shiller, Laboratory Director
March 27, 2019

Wednesday, March 27, 2019

Criteria: MA: CAM

State: MA

Sample Criteria Exceedances Report

GCC73014 - CDW

SampNo	Acode	Phoenix Analyte	Criteria	Result	RL	Criteria	RL Criteria	Analysis Units
CC73016	$PCB_SOXR	PCB-1268	MA / CAM Protocol / PCB SOIL RL	*	150		100	ug/Kg
CC73016	$PCB_SOXR	PCB-1262	MA / CAM Protocol / PCB SOIL RL	ND	150		100	ug/Kg
CC73016	$PCB_SOXR	PCB-1260	MA / CAM Protocol / PCB SOIL RL	ND	150		100	ug/Kg
CC73016	$PCB_SOXR	PCB-1248	MA / CAM Protocol / PCB SOIL RL	*	150		100	ug/Kg
CC73016	$PCB_SOXR	PCB-1242	MA / CAM Protocol / PCB SOIL RL	ND	150		100	ug/Kg
CC73016	$PCB_SOXR	PCB-1232	MA / CAM Protocol / PCB SOIL RL	ND	150		100	ug/Kg
CC73016	$PCB_SOXR	PCB-1221	MA / CAM Protocol / PCB SOIL RL	ND	150		100	ug/Kg
CC73016	$PCB_SOXR	PCB-1016	MA / CAM Protocol / PCB SOIL RL	ND	150		100	ug/Kg
CC73016	$PCB_SOXR	PCB-1254	MA / Requested PCB RL /	1300	150	1000	1000	ug/Kg

Phoenix Laboratories does not assume responsibility for the data contained in this exceedance report. It is provided as an additional tool to identify requested criteria exceedences. All efforts are made to ensure the accuracy of the data (obtained from appropriate agencies). A lack of exceedence information does not necessarily suggest conformance to the criteria. It is ultimately the site professional's responsibility to determine appropriate compliance.

MassDEP Analytical Protocol Certification Form

Laboratory Name: Phoenix Environmental Laboratories, Inc. **Project #:**

Project Location: FULLER MIDDLE SCHOOL **RTN:**

This Form provides certifications for the following data set: [list Laboratory Sample ID Number(s)]

CC73014, CC73015, CC73016

Matrices: ☐ Groundwater/Surface Water ☐ Soil/Sediment ☐ Drinking Water ☐ Air ☑ Other: BULK, CAU

CAM Protocol (check all that apply below)

8260 VOC CAM II A ☐	7470/7471 Hg CAM III B ☐	MassDEP VPH CAM IV A ☐	8081 Pesticides CAM V B ☐	7196 Hex Cr CAM VI B ☐	MassDEP APH CAM IX A ☐
8270 SVOC CAM II B ☐	7010 Metals CAM III C ☐	MassDEP EPH CAM IV B ☐	8151 Herbicides CAM V C ☐	8330 Explosives CAM VIII A ☐	TO-15 VOC CAM IX B ☐
6010 Metals CAM III A ☐	6020 Metals CAM III D ☐	8082 PCB CAM V A ☑	9012 Total Cyanide/PAC CAM V1 A ☐	6860 Perchlorate CAM VIII B ☐	

Affirmative responses to questions A through F are required for "Presumptive Certainty" status

A	Were all samples received in a condition consistent with those described on the Chain-of-Custody, properly preserved (including temperature*) in the field or laboratory, and prepared/analyzed with method holding times? (* see narrative)	☑ Yes ☐ No
B	Were the analytical method(s) and all associated QC requirements specified in the selected CAM protocol(s) followed?	☑ Yes ☐ No
C	Were all required corrective actions and analytical response actions specified in the selected CAM protocol(s) implemented for all identified performance standard non-conformances?	☑ Yes ☐ No
D	Does the laboratory report comply with all the reporting requirements speified in CAM VII A, "Quality Assurance and Quality Control Guidelines for the Acquisition and Reporting of Analytical Data"?	☑ Yes ☐ No
E	a. VPH, EPH, and APH Methods only: Was each method conducted without significant modification(s)? (refer to the individual method(s) for a list of significant modifications). b. APH and TO-15 methods only: Was the complete analyte list reported for each method?	☐ Yes ☐ No ☐ Yes ☐ No
F	Were all applicable CAM protocol QC and performance standard non-conformances identified and evaluated in a laboratory narrative (including all "No" responses to Questions A through E)?	☑ Yes ☐ No

Responses to questions G, H and I below is required for "Presumptive Certainty" status

G	Were the reporting limits at or below all CAM reporting limits specified in the selected CAM protocol(s)?	☐ Yes ☑ No

Data User Note: Data that achieve "Presumptive Certainty" status may not necessarily meet the data usability and representativeness requirements described in 310 CMR 40. 1056(2)(k) and WSC-07-350

H	Were all QC performance standards specified in the CAM protocol(s) achieved?	☑ Yes ☐ No
I	Were results reported for the complete analyte list specified in the selected CAM protocol(s)?	☑ Yes ☐ No

All negative responses must be addressed in an attached laboratory narrative.

I, the undersigned, attest under the pains and penalties of perjury that, based upon my personal inquiry of those responsible for obtaining the information, the material contained in this analytical report is, to the best of my knowledge and belief, accurate and complete.

Date: Wednesday, March 27, 2019

Authorized Signature: Rashmi Makol

Printed Name: Rashmi Makol

Position: Project Manager

PHOENIX

Environmental Laboratories, Inc.
587 East Middle Turnpike, P.O.Box 370, Manchester, CT 06045
Tel. (860) 645-1102 Fax (860) 645-0823

ACCREDITED IN ACCORDANCE WITH nelac NY # 11301

MCP Certification Report

March 27, 2019

SDG I.D.: GCC73014

SDG Comments

Phoenix reporting levels may exceed those referenced in the CAM protocol. Please refer to criteria sheet for comparisons to requested MCP standards.

PCB Narration

Were all QA/QC performance criteria specified in the MADEP document CAM achieved? Yes.

Instrument:

AU-ECD29 03/25/19-1 Saadia Chudary, Chemist 03/25/19

CC73014

The initial calibration (PC322AI) RSD for the compound list was less than 20% except for the following compounds: None.
The initial calibration (PC322BI) RSD for the compound list was less than 20% except for the following compounds: None.
The continuing calibration %D for the compound list was less than 15% except for the following compounds:None.

AU-ECD29 03/27/19-1 Saadia Chudary, Chemist 03/27/19

CC73015

The initial calibration (PC322AI) RSD for the compound list was less than 20% except for the following compounds: None.
The initial calibration (PC322BI) RSD for the compound list was less than 20% except for the following compounds: None.
The continuing calibration %D for the compound list was less than 15% except for the following compounds:None.

AU-ECD48 03/26/19-1 Saadia Chudary, Chemist 03/26/19

CC73016

The initial calibration (PC308AI) RSD for the compound list was less than 20% except for the following compounds: None.
The initial calibration (PC308BI) RSD for the compound list was less than 20% except for the following compounds: None.
The continuing calibration %D for the compound list was less than 15% except for the following compounds:
Samples: CC73016
Preceding CC 326A012 - DCBP SURR -26%L (15%)
Succeeding CC 326A031 - None.

QC (Batch Specific):

Batch 471478 (CC71500)

CC73014, CC73015, CC73016

All LCS recoveries were within 40 - 140 with the following exceptions: None.
The LCSD was lost during extraction, this batch consists of a Blank and LCS.

I attest under the pains and penalties of perjury that, based upon my inquiry of those individuals immediately responsible for obtaining the information, the material contained in this report is, to the best of my knowledge and belief, accurate and complete.

Cooler: Yes ☐ No ☑
Coolant: IPK ☐ ICE ☐ No ☑
Temp: 3.0°C Pg of

PHOENIX
Environmental Laboratories, Inc.

CHAIN OF CUSTODY RECORD

587 East Middle Turnpike, P.O. Box 370, Manchester, CT 06040
Email: info@phoenixlabs.com Fax (860) 645-0823
Client Services (860) 645-8726

Data Delivery/Contact Options:
☐ Fax:
☐ Phone:
☑ Email: scahalan@cdwconsultants.com

Customer: CDW Consultants
Address: 6 Huron Drive
Natick, MA 01760

Project: Fuller Middle School
Report to: Susan Cahalan
Invoice to: CDW
QUOTE #

Project P.O:

This section MUST be completed with Bottle Quantities.

Client Sample - Information - Identification

Sampler's Signature: Date: 3/21/19

Matrix Code:
DW=Drinking Water **GW**=Ground Water **SW**=Surface Water **WW**=Waste Water
RW=Raw Water **SE**=Sediment **SL**=Sludge **S**=Soil **SD**=Solid **W**=Wipe **OIL**=Oil
B=Bulk **L**=Liquid

Analysis Request

PHOENIX USE ONLY SAMPLE #	Customer Sample Identification	Sample Matrix	Date Sampled	Time Sampled	PCBs 4035/8082 Soxhlet	Baggie	Soil VOA Vials [ ] methanol [ ] H2O	GL Soil container ( )oz	GL Soil container ( )oz	40 ml VOA Vial [ ] As is [ ] HCl	GL Amber 1000ml [ ] As is [ ] H2SO4	PL As is [ ] 250ml [ ] 500ml [ ] 1000ml	PL H2SO4 [ ] 250ml [ ] 500ml	PL HNO3 250ml	PL NaOH 250ml	Bacteria Bottle w/thio	Bacteria Bottle as is
73014	PCB-1: Paint on metal Panels Rear of School	SD	3/18/2019	1000	X	1											
73015	PCB-2: Exterior Door Caulk #9	SD	3/18/2019	1030	X	1											
73016	PCB-3: Interior Steel Beam Caulk Rm A-7	SD	3/18/2019	1100	X	1											

Relinquished by:	Accepted by:	Date:	Time:
		3/21/19	
Fedex		3/22/19	11:21

Comments, Special Requirements or Regulations:
TCLP DTEC

Turnaround:
☐ 1 Day*
☐ 2 Days*
☒ 3 Days*
☐ Standard
☐ Other
* SURCHARGE APPLIES

RI
☐ Direct Exposure (Residential)
☐ GW
☐ Other

CT
☐ RCP Cert
☐ GW Protection
☐ SW Protection
☐ GA Mobility
☐ GB Mobility
☐ Residential DEC
☐ I/C DEC
☐ Other

MA
☐ MCP Certification
☐ GW-1
☐ GW-2
☐ GW-3
☐ S-1
☐ S-2
☐ S-3
☐ MWRA eSMART
☐ Other

State where samples were collected: MA

Data Format
☐ Excel
☐ PDF
☐ GIS/Key
☐ EQuIS
☐ Other

Data Package
☐ Tier II Checklist
☐ Full Data Package*
☐ Phoenix Std Report
☐ Other
* SURCHARGE APPLIES

PHOENIX
Environmental Laboratories, Inc.

Monday, March 18, 2019

Ms. Kathy Campbell, PE, LSP, LEED, AP
CDW Consultants, Inc
6 Huron Dr
Natick, MA 01760

Project ID: FULLER MIDDLE SCHOOL
SDG ID: GCC66915
Sample ID#s: CC66915 - CC66933

This laboratory is in compliance with the NELAC requirements of procedures used except where indicated.

This report contains results for the parameters tested, under the sampling conditions described on the Chain Of Custody, as received by the laboratory. This report is incomplete unless all pages indicated in the pagination at the bottom of the page are included.

All soils, solids and sludges are reported on a dry weight basis unless otherwise noted in the sample comments.

A scanned version of the COC form accompanies the analytical report and is an exact duplicate of the original.

If you are the client above and have any questions concerning this testing, please do not hesitate to contact Phoenix Client Services at ext.200. The contents of this report cannot be discussed with anyone other than the client listed above without their written consent.

Sincerely yours,

Phyllis Shiller
Laboratory Director

NELAC - #NY11301
CT Lab Registration #PH-0618
MA Lab Registration #M-CT007
ME Lab Registration #CT-007
NH Lab Registration #213693-A,B
NJ Lab Registration #CT-003
NY Lab Registration #11301
PA Lab Registration #68-03530
RI Lab Registration #63
UT Lab Registration #CT00007
VT Lab Registration #VT11301

587 East Middle Turnpike, P.O. Box 370, Manchester, CT 06040
Telephone (860) 645-1102 Fax (860) 645-0823

Environmental Laboratories, Inc.
587 East Middle Turnpike, P.O.Box 370, Manchester, CT 06045
Tel. (860) 645-1102 Fax (860) 645-0823

Sample Id Cross Reference

March 18, 2019

SDG I.D.: GCC66915

Project ID: FULLER MIDDLE SCHOOL

Client Id	Lab Id	Matrix
PCB-1A INTERIOR BEAM CAULK	CC66915	BULK
PCB-1B INTERIOR BEAM CAULK	CC66916	BULK
PCB-2A EXT WINDOW GLAZE CAFE	CC66917	BULK
PCB-2B EXT WINDOW GLAZE CAFE	CC66918	BULK
PCB-3A EXT WINDOW GLAZE A WING	CC66919	BULK
PCB-3B EXT WINDOW GLAZE A WING	CC66920	BULK
PCB-4A EXT WINDOW GLAZE B WING	CC66921	BULK
PCB-4B EXT WINDOW GLAZE B WING	CC66922	BULK
PCB-5A EXT WINDOW GLAZE C WING	CC66923	BULK
PCB-5B EXT WINDOW GLAZE C WING	CC66924	BULK
PCB-6 INTERIOR CAULK C10	CC66925	BULK
PCB-7 EXT DOOR CAULK #4	CC66926	BULK
PCB-8 EXT DOOR CAULK #3	CC66927	BULK
PCB-9A EXT WINDOW CAULK	CC66928	BULK
PCB-9B EXT WINDOW CAULK	CC66929	BULK
PCB-10A FLOOR TILE MASTIC C WING	CC66930	BULK
PCB-10B FLOOR TILE MASTIC B WING	CC66931	BULK
PCB-10C FLOOR TILE MASTIC A WING	CC66932	BULK
PCB-10D FLOOR TILE MASTIC B WING	CC66933	BULK

Environmental Laboratories, Inc.
587 East Middle Turnpike, P.O.Box 370, Manchester, CT 06045
Tel. (860) 645-1102 Fax (860) 645-0823

Analysis Report

March 18, 2019

FOR: Ms. Kathy Campbell, PE, LSP, LEED, AP
CDW Consultants, Inc
6 Huron Dr
Natick, MA 01760

Sample Information		Custody Information		Date	Time
Matrix:	BULK	Collected by:		03/11/19	14:30
Location Code:	CDW-PCB	Received by:	LB	03/13/19	15:24
Rush Request:	Standard	Analyzed by:	see "By" below		
P.O.#:					

Laboratory Data

SDG ID: GCC66915
Phoenix ID: CC66915

Project ID: FULLER MIDDLE SCHOOL
Client ID: PCB-1A INTERIOR BEAM CAULK

Parameter	Result	RL/ PQL	Units	Dilution	Date/Time	By	Reference
Caulk Extraction for PCB	Completed				03/13/19	XX/AK/ML	SW3540C
PCB (Soxhlet SW3540C)							
PCB-1016	ND	0.15	mg/Kg	1	03/15/19	SC	SW8082A
PCB-1221	ND	0.15	mg/Kg	1	03/15/19	SC	SW8082A
PCB-1232	ND	0.15	mg/Kg	1	03/15/19	SC	SW8082A
PCB-1242	ND	0.15	mg/Kg	1	03/15/19	SC	SW8082A
PCB-1248	ND	0.15	mg/Kg	1	03/15/19	SC	SW8082A
PCB-1254	ND	0.15	mg/Kg	1	03/15/19	SC	SW8082A
PCB-1260	ND	0.15	mg/Kg	1	03/15/19	SC	SW8082A
PCB-1262	ND	0.15	mg/Kg	1	03/15/19	SC	SW8082A
PCB-1268	ND	0.15	mg/Kg	1	03/15/19	SC	SW8082A
QA/QC Surrogates							
% DCBP	49		%	1	03/15/19	SC	30 - 150 %
% DCBP (Confirmation)	54		%	1	03/15/19	SC	30 - 150 %
% TCMX	37		%	1	03/15/19	SC	30 - 150 %
% TCMX (Confirmation)	36		%	1	03/15/19	SC	30 - 150 %

Project ID: FULLER MIDDLE SCHOOL

Client ID: PCB-1A INTERIOR BEAM CAULK

Phoenix I.D.: CC66915

Parameter	Result	RL/ PQL	Units	Dilution	Date/Time	By	Reference

Massachusetts does not offer certification for Soil/Solid matrices.

RL/PQL=Reporting/Practical Quantitation Level ND=Not Detected BRL=Below Reporting Level
QA/QC Surrogates: Surrogates are compounds (preceeded with a %) added by the lab to determine analysis efficiency. Surrogate results(%) listed in the report are not "detected" compounds.

Comments:

Results are reported on an ``as received`` basis, and are not corrected for dry weight.

All soils, solids and sludges are reported on a dry weight basis unless otherwise noted in the sample comments.

If you are the client above and have any questions concerning this testing, please do not hesitate to contact Phoenix Client Services at ext.200.
The contents of this report cannot be discussed with anyone other than the client listed above without their written consent.

Phyllis Shiller, Laboratory Director

March 18, 2019

Reviewed and Released by: Bobbi Aloisa, Vice President

Environmental Laboratories, Inc.
587 East Middle Turnpike, P.O.Box 370, Manchester, CT 06045
Tel. (860) 645-1102 Fax (860) 645-0823

Analysis Report

March 18, 2019

FOR: Ms. Kathy Campbell, PE, LSP, LEED, AP
CDW Consultants, Inc
6 Huron Dr
Natick, MA 01760

Sample Information		Custody Information		Date	Time
Matrix:	BULK	Collected by:		03/11/19	14:35
Location Code:	CDW-PCB	Received by:	LB	03/13/19	15:24
Rush Request:	Standard	Analyzed by:	see "By" below		
P.O.#:					

Laboratory Data

SDG ID: GCC66915
Phoenix ID: CC66916

Project ID: FULLER MIDDLE SCHOOL
Client ID: PCB-1B INTERIOR BEAM CAULK

Parameter	Result	RL/ PQL	Units	Dilution	Date/Time	By	Reference
Caulk Extraction for PCB	Completed				03/13/19	XX/AK/ML	SW3540C
PCB (Soxhlet SW3540C)							
PCB-1016	ND	0.15	mg/Kg	1	03/15/19	SC	SW8082A
PCB-1221	ND	0.15	mg/Kg	1	03/15/19	SC	SW8082A
PCB-1232	ND	0.15	mg/Kg	1	03/15/19	SC	SW8082A
PCB-1242	ND	0.15	mg/Kg	1	03/15/19	SC	SW8082A
PCB-1248	ND	0.15	mg/Kg	1	03/15/19	SC	SW8082A
PCB-1254	ND	0.15	mg/Kg	1	03/15/19	SC	SW8082A
PCB-1260	ND	0.15	mg/Kg	1	03/15/19	SC	SW8082A
PCB-1262	ND	0.15	mg/Kg	1	03/15/19	SC	SW8082A
PCB-1268	ND	0.15	mg/Kg	1	03/15/19	SC	SW8082A
QA/QC Surrogates							
% DCBP	56		%	1	03/15/19	SC	30 - 150 %
% DCBP (Confirmation)	59		%	1	03/15/19	SC	30 - 150 %
% TCMX	42		%	1	03/15/19	SC	30 - 150 %
% TCMX (Confirmation)	39		%	1	03/15/19	SC	30 - 150 %

Project ID: FULLER MIDDLE SCHOOL

Client ID: PCB-1B INTERIOR BEAM CAULK

Phoenix I.D.: CC66916

Parameter	Result	RL/ PQL	Units	Dilution	Date/Time	By	Reference

Massachusetts does not offer certification for Soil/Solid matrices.

RL/PQL=Reporting/Practical Quantitation Level ND=Not Detected BRL=Below Reporting Level
QA/QC Surrogates: Surrogates are compounds (preceeded with a %) added by the lab to determine analysis efficiency. Surrogate results(%) listed in the report are not "detected" compounds.

Comments:

Results are reported on an ``as received`` basis, and are not corrected for dry weight.

PCB Comment:
For PCBs, in order to reach the desired RL, multiple cleanup steps were performed. The extract was cleaned up with a combination of sulfuric acid, potassium permanganate, copper powder and additional florisil.

All soils, solids and sludges are reported on a dry weight basis unless otherwise noted in the sample comments.

If you are the client above and have any questions concerning this testing, please do not hesitate to contact Phoenix Client Services at ext.200.
The contents of this report cannot be discussed with anyone other than the client listed above without their written consent.

Phyllis Shiller, Laboratory Director

March 18, 2019

Reviewed and Released by: Bobbi Aloisa, Vice President

Environmental Laboratories, Inc.
587 East Middle Turnpike, P.O.Box 370, Manchester, CT 06045
Tel. (860) 645-1102 Fax (860) 645-0823

Analysis Report

March 18, 2019

FOR: Ms. Kathy Campbell, PE, LSP, LEED, AP
CDW Consultants, Inc
6 Huron Dr
Natick, MA 01760

Sample Information		Custody Information		Date	Time
Matrix:	BULK	Collected by:		03/11/19	14:45
Location Code:	CDW-PCB	Received by:	LB	03/13/19	15:24
Rush Request:	Standard	Analyzed by:	see "By" below		
P.O.#:					

Laboratory Data

SDG ID: GCC66915
Phoenix ID: CC66917

Project ID: FULLER MIDDLE SCHOOL
Client ID: PCB-2A EXT WINDOW GLAZE CAFE

Parameter	Result	RL/ PQL	Units	Dilution	Date/Time	By	Reference
Caulk Extraction for PCB	Completed				03/13/19	XX/AK/ML	SW3540C
PCB (Soxhlet SW3540C)							
PCB-1016	ND	0.75	mg/Kg	1	03/14/19	AW	SW8082A
PCB-1221	ND	0.75	mg/Kg	1	03/14/19	AW	SW8082A
PCB-1232	ND	0.75	mg/Kg	1	03/14/19	AW	SW8082A
PCB-1242	ND	0.75	mg/Kg	1	03/14/19	AW	SW8082A
PCB-1248	ND	0.75	mg/Kg	1	03/14/19	AW	SW8082A
PCB-1254	ND	0.75	mg/Kg	1	03/14/19	AW	SW8082A
PCB-1260	ND	0.75	mg/Kg	1	03/14/19	AW	SW8082A
PCB-1262	ND	0.75	mg/Kg	1	03/14/19	AW	SW8082A
PCB-1268	ND	0.75	mg/Kg	1	03/14/19	AW	SW8082A
QA/QC Surrogates							
% DCBP	75		%	1	03/14/19	AW	30 - 150 %
% DCBP (Confirmation)	66		%	1	03/14/19	AW	30 - 150 %
% TCMX	46		%	1	03/14/19	AW	30 - 150 %
% TCMX (Confirmation)	42		%	1	03/14/19	AW	30 - 150 %

Project ID: FULLER MIDDLE SCHOOL

Client ID: PCB-2A EXT WINDOW GLAZE CAFE

Phoenix I.D.: CC66917

Parameter	Result	RL/ PQL	Units	Dilution	Date/Time	By	Reference

Massachusetts does not offer certification for Soil/Solid matrices.

RL/PQL=Reporting/Practical Quantitation Level ND=Not Detected BRL=Below Reporting Level
QA/QC Surrogates: Surrogates are compounds (preceeded with a %) added by the lab to determine analysis efficiency. Surrogate results(%) listed in the report are not "detected" compounds.

Comments:

Results are reported on an ``as received`` basis, and are not corrected for dry weight.

All soils, solids and sludges are reported on a dry weight basis unless otherwise noted in the sample comments.

If you are the client above and have any questions concerning this testing, please do not hesitate to contact Phoenix Client Services at ext.200.
The contents of this report cannot be discussed with anyone other than the client listed above without their written consent.

Phyllis Shiller, Laboratory Director

March 18, 2019

Reviewed and Released by: Bobbi Aloisa, Vice President

Environmental Laboratories, Inc.
587 East Middle Turnpike, P.O.Box 370, Manchester, CT 06045
Tel. (860) 645-1102 Fax (860) 645-0823

Analysis Report

March 18, 2019

FOR: Ms. Kathy Campbell, PE, LSP, LEED, AP
CDW Consultants, Inc
6 Huron Dr
Natick, MA 01760

Sample Information		Custody Information		Date	Time
Matrix:	BULK	Collected by:		03/11/19	14:50
Location Code:	CDW-PCB	Received by:	LB	03/13/19	15:24
Rush Request:	Standard	Analyzed by:	see "By" below		
P.O.#:					

Laboratory Data

SDG ID: GCC66915
Phoenix ID: CC66918

Project ID: FULLER MIDDLE SCHOOL
Client ID: PCB-2B EXT WINDOW GLAZE CAFE

Parameter	Result	RL/ PQL	Units	Dilution	Date/Time	By	Reference
Caulk Extraction for PCB	Completed				03/13/19	XX/AK/ML	SW3540C
PCB (Soxhlet SW3540C)							
PCB-1016	ND	0.75	mg/Kg	1	03/14/19	AW	SW8082A
PCB-1221	ND	0.75	mg/Kg	1	03/14/19	AW	SW8082A
PCB-1232	ND	0.75	mg/Kg	1	03/14/19	AW	SW8082A
PCB-1242	ND	0.75	mg/Kg	1	03/14/19	AW	SW8082A
PCB-1248	ND	0.75	mg/Kg	1	03/14/19	AW	SW8082A
PCB-1254	ND	0.75	mg/Kg	1	03/14/19	AW	SW8082A
PCB-1260	ND	0.75	mg/Kg	1	03/14/19	AW	SW8082A
PCB-1262	ND	0.75	mg/Kg	1	03/14/19	AW	SW8082A
PCB-1268	ND	0.75	mg/Kg	1	03/14/19	AW	SW8082A
QA/QC Surrogates							
% DCBP	65		%	1	03/14/19	AW	30 - 150 %
% DCBP (Confirmation)	73		%	1	03/14/19	AW	30 - 150 %
% TCMX	41		%	1	03/14/19	AW	30 - 150 %
% TCMX (Confirmation)	44		%	1	03/14/19	AW	30 - 150 %

Project ID: FULLER MIDDLE SCHOOL

Client ID: PCB-2B EXT WINDOW GLAZE CAFE

Phoenix I.D.: CC66918

Parameter	Result	RL/ PQL	Units	Dilution	Date/Time	By	Reference

Massachusetts does not offer certification for Soil/Solid matrices.

RL/PQL=Reporting/Practical Quantitation Level ND=Not Detected BRL=Below Reporting Level
QA/QC Surrogates: Surrogates are compounds (preceeded with a %) added by the lab to determine analysis efficiency. Surrogate results(%) listed in the report are not "detected" compounds.

Comments:

Results are reported on an ``as received`` basis, and are not corrected for dry weight.

All soils, solids and sludges are reported on a dry weight basis unless otherwise noted in the sample comments.

If you are the client above and have any questions concerning this testing, please do not hesitate to contact Phoenix Client Services at ext.200.
The contents of this report cannot be discussed with anyone other than the client listed above without their written consent.

Phyllis Shiller, Laboratory Director

March 18, 2019

Reviewed and Released by: Bobbi Aloisa, Vice President

Environmental Laboratories, Inc.
587 East Middle Turnpike, P.O.Box 370, Manchester, CT 06045
Tel. (860) 645-1102 Fax (860) 645-0823

Analysis Report

March 18, 2019

FOR: Ms. Kathy Campbell, PE, LSP, LEED, AP
CDW Consultants, Inc
6 Huron Dr
Natick, MA 01760

Sample Information		Custody Information		Date	Time
Matrix:	BULK	Collected by:		03/11/19	15:00
Location Code:	CDW-PCB	Received by:	LB	03/13/19	15:24
Rush Request:	Standard	Analyzed by:	see "By" below		
P.O.#:					

Laboratory Data

SDG ID: GCC66915
Phoenix ID: CC66919

Project ID: FULLER MIDDLE SCHOOL
Client ID: PCB-3A EXT WINDOW GLAZE A WING

Parameter	Result	RL/ PQL	Units	Dilution	Date/Time	By	Reference
Caulk Extraction for PCB	Completed				03/13/19	XX/AK/ML	SW3540C
PCB (Soxhlet SW3540C)							
PCB-1016	ND	0.38	mg/Kg	1	03/14/19	SC	SW8082A
PCB-1221	ND	0.38	mg/Kg	1	03/14/19	SC	SW8082A
PCB-1232	ND	0.38	mg/Kg	1	03/14/19	SC	SW8082A
PCB-1242	ND	0.38	mg/Kg	1	03/14/19	SC	SW8082A
PCB-1248	ND	0.38	mg/Kg	1	03/14/19	SC	SW8082A
PCB-1254	ND	0.38	mg/Kg	1	03/14/19	SC	SW8082A
PCB-1260	ND	0.38	mg/Kg	1	03/14/19	SC	SW8082A
PCB-1262	ND	0.38	mg/Kg	1	03/14/19	SC	SW8082A
PCB-1268	ND	0.38	mg/Kg	1	03/14/19	SC	SW8082A
QA/QC Surrogates							
% DCBP	61		%	1	03/14/19	SC	30 - 150 %
% DCBP (Confirmation)	60		%	1	03/14/19	SC	30 - 150 %
% TCMX	38		%	1	03/14/19	SC	30 - 150 %
% TCMX (Confirmation)	38		%	1	03/14/19	SC	30 - 150 %

Project ID: FULLER MIDDLE SCHOOL

Client ID: PCB-3A EXT WINDOW GLAZE A WING

Phoenix I.D.: CC66919

Parameter	Result	RL/ PQL	Units	Dilution	Date/Time	By	Reference

Massachusetts does not offer certification for Soil/Solid matrices.

RL/PQL=Reporting/Practical Quantitation Level ND=Not Detected BRL=Below Reporting Level
QA/QC Surrogates: Surrogates are compounds (preceeded with a %) added by the lab to determine analysis efficiency. Surrogate results(%) listed in the report are not "detected" compounds.

Comments:

Results are reported on an ``as received`` basis, and are not corrected for dry weight.

All soils, solids and sludges are reported on a dry weight basis unless otherwise noted in the sample comments.

If you are the client above and have any questions concerning this testing, please do not hesitate to contact Phoenix Client Services at ext.200.
The contents of this report cannot be discussed with anyone other than the client listed above without their written consent.

Phyllis Shiller, Laboratory Director

March 18, 2019

Reviewed and Released by: Bobbi Aloisa, Vice President

Environmental Laboratories, Inc.
587 East Middle Turnpike, P.O.Box 370, Manchester, CT 06045
Tel. (860) 645-1102 Fax (860) 645-0823

Analysis Report

March 18, 2019

FOR: Ms. Kathy Campbell, PE, LSP, LEED, AP
CDW Consultants, Inc
6 Huron Dr
Natick, MA 01760

Sample Information		Custody Information		Date	Time
Matrix:	BULK	Collected by:		03/11/19	15:15
Location Code:	CDW-PCB	Received by:	LB	03/13/19	15:24
Rush Request:	Standard	Analyzed by:	see "By" below		
P.O.#:					

Laboratory Data

SDG ID: GCC66915
Phoenix ID: CC66920

Project ID: FULLER MIDDLE SCHOOL
Client ID: PCB-3B EXT WINDOW GLAZE A WING

Parameter	Result	RL/ PQL	Units	Dilution	Date/Time	By	Reference
Caulk Extraction for PCB	Completed				03/13/19	XX/AK/ML	SW3540C
PCB (Soxhlet SW3540C)							
PCB-1016	ND	0.29	mg/Kg	1	03/14/19	SC	SW8082A
PCB-1221	ND	0.29	mg/Kg	1	03/14/19	SC	SW8082A
PCB-1232	ND	0.29	mg/Kg	1	03/14/19	SC	SW8082A
PCB-1242	ND	0.29	mg/Kg	1	03/14/19	SC	SW8082A
PCB-1248	ND	0.29	mg/Kg	1	03/14/19	SC	SW8082A
PCB-1254	ND	0.29	mg/Kg	1	03/14/19	SC	SW8082A
PCB-1260	ND	0.29	mg/Kg	1	03/14/19	SC	SW8082A
PCB-1262	ND	0.29	mg/Kg	1	03/14/19	SC	SW8082A
PCB-1268	ND	0.29	mg/Kg	1	03/14/19	SC	SW8082A
QA/QC Surrogates							
% DCBP	73		%	1	03/14/19	SC	30 - 150 %
% DCBP (Confirmation)	68		%	1	03/14/19	SC	30 - 150 %
% TCMX	45		%	1	03/14/19	SC	30 - 150 %
% TCMX (Confirmation)	43		%	1	03/14/19	SC	30 - 150 %

Project ID: FULLER MIDDLE SCHOOL

Client ID: PCB-3B EXT WINDOW GLAZE A WING

Phoenix I.D.: CC66920

Parameter	Result	RL/ PQL	Units	Dilution	Date/Time	By	Reference

Massachusetts does not offer certification for Soil/Solid matrices.

RL/PQL=Reporting/Practical Quantitation Level ND=Not Detected BRL=Below Reporting Level
QA/QC Surrogates: Surrogates are compounds (preceeded with a %) added by the lab to determine analysis efficiency. Surrogate results(%) listed in the report are not "detected" compounds.

Comments:

Results are reported on an ``as received`` basis, and are not corrected for dry weight.

All soils, solids and sludges are reported on a dry weight basis unless otherwise noted in the sample comments.

If you are the client above and have any questions concerning this testing, please do not hesitate to contact Phoenix Client Services at ext.200.
The contents of this report cannot be discussed with anyone other than the client listed above without their written consent.

Phyllis Shiller, Laboratory Director

March 18, 2019

Reviewed and Released by: Bobbi Aloisa, Vice President

Environmental Laboratories, Inc.
587 East Middle Turnpike, P.O.Box 370, Manchester, CT 06045
Tel. (860) 645-1102 Fax (860) 645-0823

Analysis Report

March 18, 2019

FOR: Ms. Kathy Campbell, PE, LSP, LEED, AP
CDW Consultants, Inc
6 Huron Dr
Natick, MA 01760

Sample Information		Custody Information		Date	Time
Matrix:	BULK	Collected by:		03/11/19	15:30
Location Code:	CDW-PCB	Received by:	LB	03/13/19	15:24
Rush Request:	Standard	Analyzed by:	see "By" below		
P.O.#:					

Laboratory Data

SDG ID: GCC66915
Phoenix ID: CC66921

Project ID: FULLER MIDDLE SCHOOL
Client ID: PCB-4A EXT WINDOW GLAZE B WING

Parameter	Result	RL/ PQL	Units	Dilution	Date/Time	By	Reference
Caulk Extraction for PCB	Completed				03/13/19	XX/AK/ML	SW3540C
PCB (Soxhlet SW3540C)							
PCB-1016	ND	0.28	mg/Kg	1	03/15/19	SC	SW8082A
PCB-1221	ND	0.28	mg/Kg	1	03/15/19	SC	SW8082A
PCB-1232	ND	0.28	mg/Kg	1	03/15/19	SC	SW8082A
PCB-1242	ND	0.28	mg/Kg	1	03/15/19	SC	SW8082A
PCB-1248	ND	0.28	mg/Kg	1	03/15/19	SC	SW8082A
PCB-1254	ND	0.28	mg/Kg	1	03/15/19	SC	SW8082A
PCB-1260	ND	0.28	mg/Kg	1	03/15/19	SC	SW8082A
PCB-1262	ND	0.28	mg/Kg	1	03/15/19	SC	SW8082A
PCB-1268	ND	0.28	mg/Kg	1	03/15/19	SC	SW8082A
QA/QC Surrogates							
% DCBP	72		%	1	03/15/19	SC	30 - 150 %
% DCBP (Confirmation)	64		%	1	03/15/19	SC	30 - 150 %
% TCMX	43		%	1	03/15/19	SC	30 - 150 %
% TCMX (Confirmation)	41		%	1	03/15/19	SC	30 - 150 %

Project ID: FULLER MIDDLE SCHOOL

Client ID: PCB-4A EXT WINDOW GLAZE B WING

Phoenix I.D.: CC66921

Parameter	Result	RL/ PQL	Units	Dilution	Date/Time	By	Reference

Massachusetts does not offer certification for Soil/Solid matrices.

RL/PQL=Reporting/Practical Quantitation Level ND=Not Detected BRL=Below Reporting Level
QA/QC Surrogates: Surrogates are compounds (preceeded with a %) added by the lab to determine analysis efficiency. Surrogate results(%) listed in the report are not "detected" compounds.

Comments:

Results are reported on an ``as received`` basis, and are not corrected for dry weight.

All soils, solids and sludges are reported on a dry weight basis unless otherwise noted in the sample comments.

If you are the client above and have any questions concerning this testing, please do not hesitate to contact Phoenix Client Services at ext.200.
The contents of this report cannot be discussed with anyone other than the client listed above without their written consent.

Phyllis Shiller, Laboratory Director

March 18, 2019

Reviewed and Released by: Bobbi Aloisa, Vice President

Environmental Laboratories, Inc.
587 East Middle Turnpike, P.O.Box 370, Manchester, CT 06045
Tel. (860) 645-1102 Fax (860) 645-0823

Analysis Report

March 18, 2019

FOR: Ms. Kathy Campbell, PE, LSP, LEED, AP
CDW Consultants, Inc
6 Huron Dr
Natick, MA 01760

Sample Information		Custody Information		Date	Time
Matrix:	BULK	Collected by:		03/11/19	15:35
Location Code:	CDW-PCB	Received by:	LB	03/13/19	15:24
Rush Request:	Standard	Analyzed by:	see "By" below		
P.O.#:					

Laboratory Data

SDG ID: GCC66915
Phoenix ID: CC66922

Project ID: FULLER MIDDLE SCHOOL
Client ID: PCB-4B EXT WINDOW GLAZE B WING

Parameter	Result	RL/ PQL	Units	Dilution	Date/Time	By	Reference
Caulk Extraction for PCB	Completed				03/13/19	XX/AK/ML	SW3540C
PCB (Soxhlet SW3540C)							
PCB-1016	ND	0.72	mg/Kg	1	03/15/19	SC	SW8082A
PCB-1221	ND	0.72	mg/Kg	1	03/15/19	SC	SW8082A
PCB-1232	ND	0.72	mg/Kg	1	03/15/19	SC	SW8082A
PCB-1242	ND	0.72	mg/Kg	1	03/15/19	SC	SW8082A
PCB-1248	ND	0.72	mg/Kg	1	03/15/19	SC	SW8082A
PCB-1254	1.4	0.72	mg/Kg	1	03/15/19	SC	SW8082A
PCB-1260	ND	0.72	mg/Kg	1	03/15/19	SC	SW8082A
PCB-1262	ND	0.72	mg/Kg	1	03/15/19	SC	SW8082A
PCB-1268	ND	0.72	mg/Kg	1	03/15/19	SC	SW8082A
QA/QC Surrogates							
% DCBP	66		%	1	03/15/19	SC	30 - 150 %
% DCBP (Confirmation)	61		%	1	03/15/19	SC	30 - 150 %
% TCMX	54		%	1	03/15/19	SC	30 - 150 %
% TCMX (Confirmation)	43		%	1	03/15/19	SC	30 - 150 %

Project ID: FULLER MIDDLE SCHOOL

Client ID: PCB-4B EXT WINDOW GLAZE B WING

Phoenix I.D.: CC66922

Parameter	Result	RL/ PQL	Units	Dilution	Date/Time	By	Reference

Massachusetts does not offer certification for Soil/Solid matrices.

RL/PQL=Reporting/Practical Quantitation Level ND=Not Detected BRL=Below Reporting Level
QA/QC Surrogates: Surrogates are compounds (preceeded with a %) added by the lab to determine analysis efficiency. Surrogate results(%) listed in the report are not "detected" compounds.

Comments:

Results are reported on an ``as received`` basis, and are not corrected for dry weight.

All soils, solids and sludges are reported on a dry weight basis unless otherwise noted in the sample comments.

If you are the client above and have any questions concerning this testing, please do not hesitate to contact Phoenix Client Services at ext.200.
The contents of this report cannot be discussed with anyone other than the client listed above without their written consent.

Phyllis Shiller, Laboratory Director

March 18, 2019

Reviewed and Released by: Bobbi Aloisa, Vice President

Environmental Laboratories, Inc.
587 East Middle Turnpike, P.O.Box 370, Manchester, CT 06045
Tel. (860) 645-1102 Fax (860) 645-0823

Analysis Report

March 18, 2019

FOR: Ms. Kathy Campbell, PE, LSP, LEED, AP
CDW Consultants, Inc
6 Huron Dr
Natick, MA 01760

Sample Information		Custody Information		Date	Time
Matrix:	BULK	Collected by:		03/11/19	15:45
Location Code:	CDW-PCB	Received by:	LB	03/13/19	15:24
Rush Request:	Standard	Analyzed by:	see "By" below		
P.O.#:					

Laboratory Data

SDG ID: GCC66915
Phoenix ID: CC66923

Project ID: FULLER MIDDLE SCHOOL
Client ID: PCB-5A EXT WINDOW GLAZE C WING

Parameter	Result	RL/ PQL	Units	Dilution	Date/Time	By	Reference
Caulk Extraction for PCB	Completed				03/13/19	XX/AK/ML	SW3540C
PCB (Soxhlet SW3540C)							
PCB-1016	ND	0.33	mg/Kg	1	03/15/19	SC	SW8082A
PCB-1221	ND	0.33	mg/Kg	1	03/15/19	SC	SW8082A
PCB-1232	ND	0.33	mg/Kg	1	03/15/19	SC	SW8082A
PCB-1242	ND	0.33	mg/Kg	1	03/15/19	SC	SW8082A
PCB-1248	ND	0.33	mg/Kg	1	03/15/19	SC	SW8082A
PCB-1254	0.49	0.33	mg/Kg	1	03/15/19	SC	SW8082A
PCB-1260	ND	0.33	mg/Kg	1	03/15/19	SC	SW8082A
PCB-1262	ND	0.33	mg/Kg	1	03/15/19	SC	SW8082A
PCB-1268	ND	0.33	mg/Kg	1	03/15/19	SC	SW8082A
QA/QC Surrogates							
% DCBP	67		%	1	03/15/19	SC	30 - 150 %
% DCBP (Confirmation)	64		%	1	03/15/19	SC	30 - 150 %
% TCMX	53		%	1	03/15/19	SC	30 - 150 %
% TCMX (Confirmation)	45		%	1	03/15/19	SC	30 - 150 %

Project ID: FULLER MIDDLE SCHOOL

Client ID: PCB-5A EXT WINDOW GLAZE C WING

Phoenix I.D.: CC66923

Parameter	Result	RL/ PQL	Units	Dilution	Date/Time	By	Reference

Massachusetts does not offer certification for Soil/Solid matrices.

RL/PQL=Reporting/Practical Quantitation Level ND=Not Detected BRL=Below Reporting Level
QA/QC Surrogates: Surrogates are compounds (preceeded with a %) added by the lab to determine analysis efficiency. Surrogate results(%) listed in the report are not "detected" compounds.

Comments:

Results are reported on an ``as received`` basis, and are not corrected for dry weight.

All soils, solids and sludges are reported on a dry weight basis unless otherwise noted in the sample comments.

If you are the client above and have any questions concerning this testing, please do not hesitate to contact Phoenix Client Services at ext.200.
The contents of this report cannot be discussed with anyone other than the client listed above without their written consent.

Phyllis Shiller, Laboratory Director

March 18, 2019

Reviewed and Released by: Bobbi Aloisa, Vice President

Environmental Laboratories, Inc.
587 East Middle Turnpike, P.O.Box 370, Manchester, CT 06045
Tel. (860) 645-1102 Fax (860) 645-0823

Analysis Report

March 18, 2019

FOR: Ms. Kathy Campbell, PE, LSP, LEED, AP
CDW Consultants, Inc
6 Huron Dr
Natick, MA 01760

Sample Information		Custody Information		Date	Time
Matrix:	BULK	Collected by:		03/11/19	16:00
Location Code:	CDW-PCB	Received by:	LB	03/13/19	15:24
Rush Request:	Standard	Analyzed by:	see "By" below		
P.O.#:					

Laboratory Data

SDG ID: GCC66915
Phoenix ID: CC66924

Project ID: FULLER MIDDLE SCHOOL
Client ID: PCB-5B EXT WINDOW GLAZE C WING

Parameter	Result	RL/ PQL	Units	Dilution	Date/Time	By	Reference
Caulk Extraction for PCB	Completed				03/13/19	XX/AK/ML	SW3540C
PCB (Soxhlet SW3540C)							
PCB-1016	ND	0.56	mg/Kg	1	03/15/19	SC	SW8082A
PCB-1221	ND	0.56	mg/Kg	1	03/15/19	SC	SW8082A
PCB-1232	ND	0.56	mg/Kg	1	03/15/19	SC	SW8082A
PCB-1242	ND	0.56	mg/Kg	1	03/15/19	SC	SW8082A
PCB-1248	ND	0.56	mg/Kg	1	03/15/19	SC	SW8082A
PCB-1254	ND	0.56	mg/Kg	1	03/15/19	SC	SW8082A
PCB-1260	ND	0.56	mg/Kg	1	03/15/19	SC	SW8082A
PCB-1262	ND	0.56	mg/Kg	1	03/15/19	SC	SW8082A
PCB-1268	ND	0.56	mg/Kg	1	03/15/19	SC	SW8082A
QA/QC Surrogates							
% DCBP	67		%	1	03/15/19	SC	30 - 150 %
% DCBP (Confirmation)	62		%	1	03/15/19	SC	30 - 150 %
% TCMX	43		%	1	03/15/19	SC	30 - 150 %
% TCMX (Confirmation)	40		%	1	03/15/19	SC	30 - 150 %

Project ID: FULLER MIDDLE SCHOOL

Client ID: PCB-5B EXT WINDOW GLAZE C WING

Phoenix I.D.: CC66924

Parameter	Result	RL/ PQL	Units	Dilution	Date/Time	By	Reference

Massachusetts does not offer certification for Soil/Solid matrices.

RL/PQL=Reporting/Practical Quantitation Level ND=Not Detected BRL=Below Reporting Level
QA/QC Surrogates: Surrogates are compounds (preceeded with a %) added by the lab to determine analysis efficiency. Surrogate results(%) listed in the report are not "detected" compounds.

Comments:

Results are reported on an ``as received`` basis, and are not corrected for dry weight.

All soils, solids and sludges are reported on a dry weight basis unless otherwise noted in the sample comments.

If you are the client above and have any questions concerning this testing, please do not hesitate to contact Phoenix Client Services at ext.200.
The contents of this report cannot be discussed with anyone other than the client listed above without their written consent.

Phyllis Shiller, Laboratory Director

March 18, 2019

Reviewed and Released by: Bobbi Aloisa, Vice President

Environmental Laboratories, Inc.
587 East Middle Turnpike, P.O.Box 370, Manchester, CT 06045
Tel. (860) 645-1102 Fax (860) 645-0823

Analysis Report

March 18, 2019

FOR: Ms. Kathy Campbell, PE, LSP, LEED, AP
CDW Consultants, Inc
6 Huron Dr
Natick, MA 01760

Sample Information		Custody Information		Date	Time
Matrix:	BULK	Collected by:		03/11/19	16:20
Location Code:	CDW-PCB	Received by:	LB	03/13/19	15:24
Rush Request:	Standard	Analyzed by:	see "By" below		
P.O.#:					

Laboratory Data

SDG ID: GCC66915
Phoenix ID: CC66925

Project ID: FULLER MIDDLE SCHOOL
Client ID: PCB-6 INTERIOR CAULK C10

Parameter	Result	RL/ PQL	Units	Dilution	Date/Time	By	Reference
Caulk Extraction for PCB	Completed				03/13/19	XX/AK/ML	SW3540C
PCB (Soxhlet SW3540C)							
PCB-1016	ND	0.36	mg/Kg	1	03/15/19	SC	SW8082A
PCB-1221	ND	0.36	mg/Kg	1	03/15/19	SC	SW8082A
PCB-1232	ND	0.36	mg/Kg	1	03/15/19	SC	SW8082A
PCB-1242	ND	0.36	mg/Kg	1	03/15/19	SC	SW8082A
PCB-1248	ND	0.36	mg/Kg	1	03/15/19	SC	SW8082A
PCB-1254	0.51	0.36	mg/Kg	1	03/15/19	SC	SW8082A
PCB-1260	ND	0.36	mg/Kg	1	03/15/19	SC	SW8082A
PCB-1262	ND	0.36	mg/Kg	1	03/15/19	SC	SW8082A
PCB-1268	ND	0.36	mg/Kg	1	03/15/19	SC	SW8082A
QA/QC Surrogates							
% DCBP	58		%	1	03/15/19	SC	30 - 150 %
% DCBP (Confirmation)	60		%	1	03/15/19	SC	30 - 150 %
% TCMX	41		%	1	03/15/19	SC	30 - 150 %
% TCMX (Confirmation)	39		%	1	03/15/19	SC	30 - 150 %

Project ID: FULLER MIDDLE SCHOOL
Client ID: PCB-6 INTERIOR CAULK C10

Phoenix I.D.: CC66925

Parameter	Result	RL/ PQL	Units	Dilution	Date/Time	By	Reference

Massachusetts does not offer certification for Soil/Solid matrices.

RL/PQL=Reporting/Practical Quantitation Level ND=Not Detected BRL=Below Reporting Level
QA/QC Surrogates: Surrogates are compounds (preceeded with a %) added by the lab to determine analysis efficiency. Surrogate results(%) listed in the report are not "detected" compounds.

Comments:

Results are reported on an ``as received`` basis, and are not corrected for dry weight.

All soils, solids and sludges are reported on a dry weight basis unless otherwise noted in the sample comments.

If you are the client above and have any questions concerning this testing, please do not hesitate to contact Phoenix Client Services at ext.200.
The contents of this report cannot be discussed with anyone other than the client listed above without their written consent.

Phyllis Shiller, Laboratory Director
March 18, 2019
Reviewed and Released by: Bobbi Aloisa, Vice President

Environmental Laboratories, Inc.
587 East Middle Turnpike, P.O.Box 370, Manchester, CT 06045
Tel. (860) 645-1102 Fax (860) 645-0823

Analysis Report

March 18, 2019

FOR: Ms. Kathy Campbell, PE, LSP, LEED, AP
CDW Consultants, Inc
6 Huron Dr
Natick, MA 01760

Sample Information		Custody Information		Date	Time
Matrix:	BULK	Collected by:		03/11/19	16:25
Location Code:	CDW-PCB	Received by:	LB	03/13/19	15:24
Rush Request:	Standard	Analyzed by:	see "By" below		
P.O.#:					

Laboratory Data

SDG ID: GCC66915
Phoenix ID: CC66926

Project ID: FULLER MIDDLE SCHOOL
Client ID: PCB-7 EXT DOOR CAULK #4

Parameter	Result	RL/ PQL	Units	Dilution	Date/Time	By	Reference
Caulk Extraction for PCB	Completed				03/13/19	XX/AK/ML	SW3540C
PCB (Soxhlet SW3540C)							
PCB-1016	ND	0.16	mg/Kg	1	03/15/19	SC	SW8082A
PCB-1221	ND	0.16	mg/Kg	1	03/15/19	SC	SW8082A
PCB-1232	ND	0.16	mg/Kg	1	03/15/19	SC	SW8082A
PCB-1242	ND	0.16	mg/Kg	1	03/15/19	SC	SW8082A
PCB-1248	ND	0.16	mg/Kg	1	03/15/19	SC	SW8082A
PCB-1254	ND	0.16	mg/Kg	1	03/15/19	SC	SW8082A
PCB-1260	ND	0.16	mg/Kg	1	03/15/19	SC	SW8082A
PCB-1262	ND	0.16	mg/Kg	1	03/15/19	SC	SW8082A
PCB-1268	ND	0.16	mg/Kg	1	03/15/19	SC	SW8082A
QA/QC Surrogates							
% DCBP	51		%	1	03/15/19	SC	30 - 150 %
% DCBP (Confirmation)	54		%	1	03/15/19	SC	30 - 150 %
% TCMX	33		%	1	03/15/19	SC	30 - 150 %
% TCMX (Confirmation)	34		%	1	03/15/19	SC	30 - 150 %

Project ID: FULLER MIDDLE SCHOOL
Client ID: PCB-7 EXT DOOR CAULK #4

Phoenix I.D.: CC66926

Parameter	Result	RL/ PQL	Units	Dilution	Date/Time	By	Reference

Massachusetts does not offer certification for Soil/Solid matrices.

RL/PQL=Reporting/Practical Quantitation Level ND=Not Detected BRL=Below Reporting Level
QA/QC Surrogates: Surrogates are compounds (preceeded with a %) added by the lab to determine analysis efficiency. Surrogate results(%) listed in the report are not "detected" compounds.

Comments:

Results are reported on an ``as received`` basis, and are not corrected for dry weight.

All soils, solids and sludges are reported on a dry weight basis unless otherwise noted in the sample comments.

If you are the client above and have any questions concerning this testing, please do not hesitate to contact Phoenix Client Services at ext.200.
The contents of this report cannot be discussed with anyone other than the client listed above without their written consent.

Phyllis Shiller, Laboratory Director
March 18, 2019
Reviewed and Released by: Bobbi Aloisa, Vice President

Environmental Laboratories, Inc.
587 East Middle Turnpike, P.O.Box 370, Manchester, CT 06045
Tel. (860) 645-1102 Fax (860) 645-0823

Analysis Report

March 18, 2019

FOR: Ms. Kathy Campbell, PE, LSP, LEED, AP
CDW Consultants, Inc
6 Huron Dr
Natick, MA 01760

Sample Information		Custody Information		Date	Time
Matrix:	BULK	Collected by:		03/11/19	16:45
Location Code:	CDW-PCB	Received by:	LB	03/13/19	15:24
Rush Request:	Standard	Analyzed by:	see "By" below		
P.O.#:					

Laboratory Data

SDG ID: GCC66915
Phoenix ID: CC66927

Project ID: FULLER MIDDLE SCHOOL
Client ID: PCB-8 EXT DOOR CAULK #3

Parameter	Result	RL/ PQL	Units	Dilution	Date/Time	By	Reference
Caulk Extraction for PCB	Completed				03/13/19	XX/AK/ML	SW3540C
PCB (Soxhlet SW3540C)							
PCB-1016	ND	0.16	mg/Kg	1	03/15/19	SC	SW8082A
PCB-1221	ND	0.16	mg/Kg	1	03/15/19	SC	SW8082A
PCB-1232	ND	0.16	mg/Kg	1	03/15/19	SC	SW8082A
PCB-1242	ND	0.16	mg/Kg	1	03/15/19	SC	SW8082A
PCB-1248	ND	0.16	mg/Kg	1	03/15/19	SC	SW8082A
PCB-1254	0.19	0.16	mg/Kg	1	03/15/19	SC	SW8082A
PCB-1260	ND	0.16	mg/Kg	1	03/15/19	SC	SW8082A
PCB-1262	ND	0.16	mg/Kg	1	03/15/19	SC	SW8082A
PCB-1268	ND	0.16	mg/Kg	1	03/15/19	SC	SW8082A
QA/QC Surrogates							
% DCBP	66		%	1	03/15/19	SC	30 - 150 %
% DCBP (Confirmation)	64		%	1	03/15/19	SC	30 - 150 %
% TCMX	43		%	1	03/15/19	SC	30 - 150 %
% TCMX (Confirmation)	40		%	1	03/15/19	SC	30 - 150 %

Project ID: FULLER MIDDLE SCHOOL
Client ID: PCB-8 EXT DOOR CAULK #3

Phoenix I.D.: CC66927

Parameter	Result	RL/ PQL	Units	Dilution	Date/Time	By	Reference

Massachusetts does not offer certification for Soil/Solid matrices.

RL/PQL=Reporting/Practical Quantitation Level ND=Not Detected BRL=Below Reporting Level
QA/QC Surrogates: Surrogates are compounds (preceeded with a %) added by the lab to determine analysis efficiency. Surrogate results(%) listed in the report are not "detected" compounds.

Comments:

Results are reported on an ``as received`` basis, and are not corrected for dry weight.

All soils, solids and sludges are reported on a dry weight basis unless otherwise noted in the sample comments.

If you are the client above and have any questions concerning this testing, please do not hesitate to contact Phoenix Client Services at ext.200.
The contents of this report cannot be discussed with anyone other than the client listed above without their written consent.

Phyllis Shiller, Laboratory Director
March 18, 2019
Reviewed and Released by: Bobbi Aloisa, Vice President

Environmental Laboratories, Inc.
587 East Middle Turnpike, P.O.Box 370, Manchester, CT 06045
Tel. (860) 645-1102 Fax (860) 645-0823

Analysis Report

March 18, 2019

FOR: Ms. Kathy Campbell, PE, LSP, LEED, AP
CDW Consultants, Inc
6 Huron Dr
Natick, MA 01760

Sample Information		Custody Information		Date	Time
Matrix:	BULK	Collected by:		03/11/19	16:50
Location Code:	CDW-PCB	Received by:	LB	03/13/19	15:24
Rush Request:	Standard	Analyzed by:	see "By" below		
P.O.#:					

Laboratory Data

SDG ID: GCC66915
Phoenix ID: CC66928

Project ID: FULLER MIDDLE SCHOOL
Client ID: PCB-9A EXT WINDOW CAULK

Parameter	Result	RL/ PQL	Units	Dilution	Date/Time	By	Reference
Caulk Extraction for PCB	Completed				03/13/19	XX/AK/ML	SW3540C
PCB (Soxhlet SW3540C)							
PCB-1016	ND	0.15	mg/Kg	1	03/15/19	SC	SW8082A
PCB-1221	ND	0.15	mg/Kg	1	03/15/19	SC	SW8082A
PCB-1232	ND	0.15	mg/Kg	1	03/15/19	SC	SW8082A
PCB-1242	ND	0.15	mg/Kg	1	03/15/19	SC	SW8082A
PCB-1248	ND	0.15	mg/Kg	1	03/15/19	SC	SW8082A
PCB-1254	0.24	0.15	mg/Kg	1	03/15/19	SC	SW8082A
PCB-1260	ND	0.15	mg/Kg	1	03/15/19	SC	SW8082A
PCB-1262	ND	0.15	mg/Kg	1	03/15/19	SC	SW8082A
PCB-1268	ND	0.15	mg/Kg	1	03/15/19	SC	SW8082A
QA/QC Surrogates							
% DCBP	71		%	1	03/15/19	SC	30 - 150 %
% DCBP (Confirmation)	67		%	1	03/15/19	SC	30 - 150 %
% TCMX	57		%	1	03/15/19	SC	30 - 150 %
% TCMX (Confirmation)	46		%	1	03/15/19	SC	30 - 150 %

Project ID: FULLER MIDDLE SCHOOL
Client ID: PCB-9A EXT WINDOW CAULK

Phoenix I.D.: CC66928

Parameter	Result	RL/ PQL	Units	Dilution	Date/Time	By	Reference

Massachusetts does not offer certification for Soil/Solid matrices.

RL/PQL=Reporting/Practical Quantitation Level ND=Not Detected BRL=Below Reporting Level
QA/QC Surrogates: Surrogates are compounds (preceeded with a %) added by the lab to determine analysis efficiency. Surrogate results(%) listed in the report are not "detected" compounds.

Comments:

Results are reported on an ``as received`` basis, and are not corrected for dry weight.

All soils, solids and sludges are reported on a dry weight basis unless otherwise noted in the sample comments.

If you are the client above and have any questions concerning this testing, please do not hesitate to contact Phoenix Client Services at ext.200.
The contents of this report cannot be discussed with anyone other than the client listed above without their written consent.

Phyllis Shiller, Laboratory Director
March 18, 2019
Reviewed and Released by: Bobbi Aloisa, Vice President

Environmental Laboratories, Inc.
587 East Middle Turnpike, P.O.Box 370, Manchester, CT 06045
Tel. (860) 645-1102 Fax (860) 645-0823

Analysis Report

March 18, 2019

FOR: Ms. Kathy Campbell, PE, LSP, LEED, AP
CDW Consultants, Inc
6 Huron Dr
Natick, MA 01760

Sample Information		Custody Information		Date	Time
Matrix:	BULK	Collected by:		03/11/19	17:00
Location Code:	CDW-PCB	Received by:	LB	03/13/19	15:24
Rush Request:	Standard	Analyzed by:	see "By" below		
P.O.#:					

Laboratory Data

SDG ID: GCC66915
Phoenix ID: CC66929

Project ID: FULLER MIDDLE SCHOOL
Client ID: PCB-9B EXT WINDOW CAULK

Parameter	Result	RL/ PQL	Units	Dilution	Date/Time	By	Reference
Caulk Extraction for PCB	Completed				03/14/19		SW3540C
PCB (Soxhlet SW3540C)							
PCB-1016	ND	0.15	mg/Kg	1	03/15/19	SC	SW8082A
PCB-1221	ND	0.15	mg/Kg	1	03/15/19	SC	SW8082A
PCB-1232	ND	0.15	mg/Kg	1	03/15/19	SC	SW8082A
PCB-1242	ND	0.15	mg/Kg	1	03/15/19	SC	SW8082A
PCB-1248	ND	0.15	mg/Kg	1	03/15/19	SC	SW8082A
PCB-1254	ND	0.15	mg/Kg	1	03/15/19	SC	SW8082A
PCB-1260	ND	0.15	mg/Kg	1	03/15/19	SC	SW8082A
PCB-1262	ND	0.15	mg/Kg	1	03/15/19	SC	SW8082A
PCB-1268	ND	0.15	mg/Kg	1	03/15/19	SC	SW8082A
QA/QC Surrogates							
% DCBP	41		%	1	03/15/19	SC	30 - 150 %
% DCBP (Confirmation)	38		%	1	03/15/19	SC	30 - 150 %
% TCMX	35		%	1	03/15/19	SC	30 - 150 %
% TCMX (Confirmation)	36		%	1	03/15/19	SC	30 - 150 %

Project ID: FULLER MIDDLE SCHOOL
Client ID: PCB-9B EXT WINDOW CAULK

Phoenix I.D.: CC66929

Parameter	Result	RL/ PQL	Units	Dilution	Date/Time	By	Reference

Massachusetts does not offer certification for Soil/Solid matrices.

RL/PQL=Reporting/Practical Quantitation Level ND=Not Detected BRL=Below Reporting Level
QA/QC Surrogates: Surrogates are compounds (preceeded with a %) added by the lab to determine analysis efficiency. Surrogate results(%) listed in the report are not "detected" compounds.

Comments:

Results are reported on an ``as received`` basis, and are not corrected for dry weight.

All soils, solids and sludges are reported on a dry weight basis unless otherwise noted in the sample comments.

If you are the client above and have any questions concerning this testing, please do not hesitate to contact Phoenix Client Services at ext.200.
The contents of this report cannot be discussed with anyone other than the client listed above without their written consent.

Phyllis Shiller, Laboratory Director
March 18, 2019
Reviewed and Released by: Bobbi Aloisa, Vice President

Environmental Laboratories, Inc.
587 East Middle Turnpike, P.O.Box 370, Manchester, CT 06045
Tel. (860) 645-1102 Fax (860) 645-0823

Analysis Report

March 18, 2019

FOR: Ms. Kathy Campbell, PE, LSP, LEED, AP
CDW Consultants, Inc
6 Huron Dr
Natick, MA 01760

Sample Information		Custody Information		Date	Time
Matrix:	BULK	Collected by:		03/11/19	17:30
Location Code:	CDW-PCB	Received by:	LB	03/13/19	15:24
Rush Request:	Standard	Analyzed by:	see "By" below		
P.O.#:					

Laboratory Data

SDG ID: GCC66915
Phoenix ID: CC66930

Project ID: FULLER MIDDLE SCHOOL
Client ID: PCB-10A FLOOR TILE MASTIC C WING

Parameter	Result	RL/ PQL	Units	Dilution	Date/Time	By	Reference
Caulk Extraction for PCB	Completed				03/14/19		SW3540C
PCB (Soxhlet SW3540C)							
PCB-1016	ND	0.16	mg/Kg	1	03/15/19	SC	SW8082A
PCB-1221	ND	0.16	mg/Kg	1	03/15/19	SC	SW8082A
PCB-1232	ND	0.16	mg/Kg	1	03/15/19	SC	SW8082A
PCB-1242	ND	0.16	mg/Kg	1	03/15/19	SC	SW8082A
PCB-1248	ND	0.16	mg/Kg	1	03/15/19	SC	SW8082A
PCB-1254	ND	0.16	mg/Kg	1	03/15/19	SC	SW8082A
PCB-1260	ND	0.16	mg/Kg	1	03/15/19	SC	SW8082A
PCB-1262	ND	0.16	mg/Kg	1	03/15/19	SC	SW8082A
PCB-1268	ND	0.16	mg/Kg	1	03/15/19	SC	SW8082A
QA/QC Surrogates							
% DCBP	45		%	1	03/15/19	SC	30 - 150 %
% DCBP (Confirmation)	42		%	1	03/15/19	SC	30 - 150 %
% TCMX	35		%	1	03/15/19	SC	30 - 150 %
% TCMX (Confirmation)	37		%	1	03/15/19	SC	30 - 150 %

Project ID: FULLER MIDDLE SCHOOL

Client ID: PCB-10A FLOOR TILE MASTIC C WING

Phoenix I.D.: CC66930

Parameter	Result	RL/ PQL	Units	Dilution	Date/Time	By	Reference

Massachusetts does not offer certification for Soil/Solid matrices.

RL/PQL=Reporting/Practical Quantitation Level ND=Not Detected BRL=Below Reporting Level
QA/QC Surrogates: Surrogates are compounds (preceeded with a %) added by the lab to determine analysis efficiency. Surrogate results(%) listed in the report are not "detected" compounds.

Comments:

Results are reported on an ``as received`` basis, and are not corrected for dry weight.

All soils, solids and sludges are reported on a dry weight basis unless otherwise noted in the sample comments.

If you are the client above and have any questions concerning this testing, please do not hesitate to contact Phoenix Client Services at ext.200.
The contents of this report cannot be discussed with anyone other than the client listed above without their written consent.

Phyllis Shiller, Laboratory Director

March 18, 2019

Reviewed and Released by: Bobbi Aloisa, Vice President

Environmental Laboratories, Inc.
587 East Middle Turnpike, P.O.Box 370, Manchester, CT 06045
Tel. (860) 645-1102 Fax (860) 645-0823

Analysis Report

March 18, 2019

FOR: Ms. Kathy Campbell, PE, LSP, LEED, AP
CDW Consultants, Inc
6 Huron Dr
Natick, MA 01760

Sample Information		Custody Information		Date	Time
Matrix:	BULK	Collected by:		03/11/19	17:45
Location Code:	CDW-PCB	Received by:	LB	03/13/19	15:24
Rush Request:	Standard	Analyzed by:	see "By" below		
P.O.#:					

Laboratory Data

SDG ID: GCC66915
Phoenix ID: CC66931

Project ID: FULLER MIDDLE SCHOOL
Client ID: PCB-10B FLOOR TILE MASTIC B WING

Parameter	Result	RL/ PQL	Units	Dilution	Date/Time	By	Reference
Caulk Extraction for PCB	Completed				03/14/19		SW3540C
PCB (Soxhlet SW3540C)							
PCB-1016	ND	0.14	mg/Kg	1	03/15/19	SC	SW8082A
PCB-1221	ND	0.14	mg/Kg	1	03/15/19	SC	SW8082A
PCB-1232	ND	0.14	mg/Kg	1	03/15/19	SC	SW8082A
PCB-1242	ND	0.14	mg/Kg	1	03/15/19	SC	SW8082A
PCB-1248	ND	0.14	mg/Kg	1	03/15/19	SC	SW8082A
PCB-1254	ND	0.14	mg/Kg	1	03/15/19	SC	SW8082A
PCB-1260	ND	0.14	mg/Kg	1	03/15/19	SC	SW8082A
PCB-1262	ND	0.14	mg/Kg	1	03/15/19	SC	SW8082A
PCB-1268	ND	0.14	mg/Kg	1	03/15/19	SC	SW8082A
QA/QC Surrogates							
% DCBP	39		%	1	03/15/19	SC	30 - 150 %
% DCBP (Confirmation)	38		%	1	03/15/19	SC	30 - 150 %
% TCMX	31		%	1	03/15/19	SC	30 - 150 %
% TCMX (Confirmation)	32		%	1	03/15/19	SC	30 - 150 %

Project ID: FULLER MIDDLE SCHOOL

Client ID: PCB-10B FLOOR TILE MASTIC B WING

Phoenix I.D.: CC66931

Parameter	Result	RL/ PQL	Units	Dilution	Date/Time	By	Reference

Massachusetts does not offer certification for Soil/Solid matrices.

RL/PQL=Reporting/Practical Quantitation Level ND=Not Detected BRL=Below Reporting Level
QA/QC Surrogates: Surrogates are compounds (preceeded with a %) added by the lab to determine analysis efficiency. Surrogate results(%) listed in the report are not "detected" compounds.

Comments:

Results are reported on an ``as received`` basis, and are not corrected for dry weight.

All soils, solids and sludges are reported on a dry weight basis unless otherwise noted in the sample comments.

If you are the client above and have any questions concerning this testing, please do not hesitate to contact Phoenix Client Services at ext.200.
The contents of this report cannot be discussed with anyone other than the client listed above without their written consent.

Phyllis Shiller, Laboratory Director

March 18, 2019

Reviewed and Released by: Bobbi Aloisa, Vice President

Environmental Laboratories, Inc.
587 East Middle Turnpike, P.O.Box 370, Manchester, CT 06045
Tel. (860) 645-1102 Fax (860) 645-0823

Analysis Report

March 18, 2019

FOR: Ms. Kathy Campbell, PE, LSP, LEED, AP
CDW Consultants, Inc
6 Huron Dr
Natick, MA 01760

Sample Information		Custody Information		Date	Time
Matrix:	BULK	Collected by:		03/11/19	18:00
Location Code:	CDW-PCB	Received by:	LB	03/13/19	15:24
Rush Request:	Standard	Analyzed by:	see "By" below		
P.O.#:					

Laboratory Data

SDG ID: GCC66915
Phoenix ID: CC66932

Project ID: FULLER MIDDLE SCHOOL
Client ID: PCB-10C FLOOR TILE MASTIC A WING

Parameter	Result	RL/ PQL	Units	Dilution	Date/Time	By	Reference
Caulk Extraction for PCB	Completed				03/14/19		SW3540C
PCB (Soxhlet SW3540C)							
PCB-1016	ND	0.15	mg/Kg	1	03/15/19	SC	SW8082A
PCB-1221	ND	0.15	mg/Kg	1	03/15/19	SC	SW8082A
PCB-1232	ND	0.15	mg/Kg	1	03/15/19	SC	SW8082A
PCB-1242	ND	0.15	mg/Kg	1	03/15/19	SC	SW8082A
PCB-1248	ND	0.15	mg/Kg	1	03/15/19	SC	SW8082A
PCB-1254	ND	0.15	mg/Kg	1	03/15/19	SC	SW8082A
PCB-1260	ND	0.15	mg/Kg	1	03/15/19	SC	SW8082A
PCB-1262	ND	0.15	mg/Kg	1	03/15/19	SC	SW8082A
PCB-1268	ND	0.15	mg/Kg	1	03/15/19	SC	SW8082A
QA/QC Surrogates							
% DCBP	61		%	1	03/15/19	SC	30 - 150 %
% DCBP (Confirmation)	53		%	1	03/15/19	SC	30 - 150 %
% TCMX	52		%	1	03/15/19	SC	30 - 150 %
% TCMX (Confirmation)	38		%	1	03/15/19	SC	30 - 150 %

Project ID: FULLER MIDDLE SCHOOL

Client ID: PCB-10C FLOOR TILE MASTIC A WING

Phoenix I.D.: CC66932

Parameter	Result	RL/ PQL	Units	Dilution	Date/Time	By	Reference

Massachusetts does not offer certification for Soil/Solid matrices.

RL/PQL=Reporting/Practical Quantitation Level ND=Not Detected BRL=Below Reporting Level
QA/QC Surrogates: Surrogates are compounds (preceeded with a %) added by the lab to determine analysis efficiency. Surrogate results(%) listed in the report are not "detected" compounds.

Comments:

Results are reported on an ``as received`` basis, and are not corrected for dry weight.

All soils, solids and sludges are reported on a dry weight basis unless otherwise noted in the sample comments.

If you are the client above and have any questions concerning this testing, please do not hesitate to contact Phoenix Client Services at ext.200.
The contents of this report cannot be discussed with anyone other than the client listed above without their written consent.

Phyllis Shiller, Laboratory Director

March 18, 2019

Reviewed and Released by: Bobbi Aloisa, Vice President

Environmental Laboratories, Inc.
587 East Middle Turnpike, P.O.Box 370, Manchester, CT 06045
Tel. (860) 645-1102 Fax (860) 645-0823

Analysis Report

March 18, 2019

FOR: Ms. Kathy Campbell, PE, LSP, LEED, AP
CDW Consultants, Inc
6 Huron Dr
Natick, MA 01760

Sample Information		Custody Information		Date	Time
Matrix:	BULK	Collected by:		03/11/19	18:15
Location Code:	CDW-PCB	Received by:	LB	03/13/19	15:24
Rush Request:	Standard	Analyzed by:	see "By" below		
P.O.#:					

Laboratory Data

SDG ID: GCC66915
Phoenix ID: CC66933

Project ID: FULLER MIDDLE SCHOOL
Client ID: PCB-10D FLOOR TILE MASTIC B WING

Parameter	Result	RL/ PQL	Units	Dilution	Date/Time	By	Reference
Caulk Extraction for PCB	Completed				03/14/19		SW3540C
PCB (Soxhlet SW3540C)							
PCB-1016	ND	0.16	mg/Kg	1	03/15/19	SC	SW8082A
PCB-1221	ND	0.16	mg/Kg	1	03/15/19	SC	SW8082A
PCB-1232	ND	0.16	mg/Kg	1	03/15/19	SC	SW8082A
PCB-1242	ND	0.16	mg/Kg	1	03/15/19	SC	SW8082A
PCB-1248	ND	0.16	mg/Kg	1	03/15/19	SC	SW8082A
PCB-1254	ND	0.16	mg/Kg	1	03/15/19	SC	SW8082A
PCB-1260	ND	0.16	mg/Kg	1	03/15/19	SC	SW8082A
PCB-1262	ND	0.16	mg/Kg	1	03/15/19	SC	SW8082A
PCB-1268	ND	0.16	mg/Kg	1	03/15/19	SC	SW8082A
QA/QC Surrogates							
% DCBP	64		%	1	03/15/19	SC	30 - 150 %
% DCBP (Confirmation)	57		%	1	03/15/19	SC	30 - 150 %
% TCMX	60		%	1	03/15/19	SC	30 - 150 %
% TCMX (Confirmation)	46		%	1	03/15/19	SC	30 - 150 %

Project ID: FULLER MIDDLE SCHOOL

Client ID: PCB-10D FLOOR TILE MASTIC B WING

Phoenix I.D.: CC66933

Parameter	Result	RL/ PQL	Units	Dilution	Date/Time	By	Reference

Massachusetts does not offer certification for Soil/Solid matrices.

RL/PQL=Reporting/Practical Quantitation Level ND=Not Detected BRL=Below Reporting Level
QA/QC Surrogates: Surrogates are compounds (preceeded with a %) added by the lab to determine analysis efficiency. Surrogate results(%) listed in the report are not "detected" compounds.

Comments:

Results are reported on an ``as received`` basis, and are not corrected for dry weight.

All soils, solids and sludges are reported on a dry weight basis unless otherwise noted in the sample comments.

If you are the client above and have any questions concerning this testing, please do not hesitate to contact Phoenix Client Services at ext.200.
The contents of this report cannot be discussed with anyone other than the client listed above without their written consent.

Phyllis Shiller, Laboratory Director

March 18, 2019

Reviewed and Released by: Bobbi Aloisa, Vice President

Environmental Laboratories, Inc.
587 East Middle Turnpike, P.O.Box 370, Manchester, CT 06045
Tel. (860) 645-1102 Fax (860) 645-0823

QA/QC Report

March 18, 2019

QA/QC Data

SDG I.D.: GCC66915

Parameter	Blank	Blk RL	LCS %	LCSD %	LCS RPD	MS %	MSD %	MS RPD	% Rec Limits	% RPD Limits	
QA/QC Batch 470255 (mg/Kg), QC Sample No: CC61673 10X (CC66929, CC66930, CC66931, CC66932, CC66933)											
Polychlorinated Biphenyls - Bulk											
PCB-1016	ND	0.17	88	73	18.6	63	57	10.0	40 - 140	30	
PCB-1221	ND	0.17							40 - 140	30	
PCB-1232	ND	0.17							40 - 140	30	
PCB-1242	ND	0.17							40 - 140	30	
PCB-1248	ND	0.17							40 - 140	30	
PCB-1254	ND	0.17							40 - 140	30	
PCB-1260	ND	0.17	102	71	35.8	71	63	11.9	40 - 140	30	r
PCB-1262	ND	0.17							40 - 140	30	
PCB-1268	ND	0.17							40 - 140	30	
% DCBP (Surrogate Rec)	79	%	89	87	2.3	84	78	7.4	30 - 150	30	
% DCBP (Surrogate Rec) (Confirm	84	%	95	98	3.1	97	92	5.3	30 - 150	30	
% TCMX (Surrogate Rec)	74	%	85	69	20.8	80	73	9.2	30 - 150	30	
% TCMX (Surrogate Rec) (Confirm	76	%	88	76	14.6	87	80	8.4	30 - 150	30	
QA/QC Batch 470136 (mg/Kg), QC Sample No: CC67037 10X (CC66915, CC66916, CC66917, CC66918, CC66919, CC66920, CC66921, CC66922, CC66923, CC66924, CC66925, CC66926, CC66927, CC66928)											
Polychlorinated Biphenyls - Bulk											
PCB-1016	ND	0.17	72	76	5.4	75	79	5.2	40 - 140	30	
PCB-1221	ND	0.17							40 - 140	30	
PCB-1232	ND	0.17							40 - 140	30	
PCB-1242	ND	0.17							40 - 140	30	
PCB-1248	ND	0.17							40 - 140	30	
PCB-1254	ND	0.17							40 - 140	30	
PCB-1260	ND	0.17	77	80	3.8	83	82	1.2	40 - 140	30	
PCB-1262	ND	0.17							40 - 140	30	
PCB-1268	ND	0.17							40 - 140	30	
% DCBP (Surrogate Rec)	81	%	89	89	0.0	94	92	2.2	30 - 150	30	
% DCBP (Surrogate Rec) (Confirm	68	%	71	75	5.5	79	78	1.3	30 - 150	30	
% TCMX (Surrogate Rec)	65	%	73	78	6.6	81	84	3.6	30 - 150	30	
% TCMX (Surrogate Rec) (Confirm	64	%	74	79	6.5	82	85	3.6	30 - 150	30	

r = This parameter is outside laboratory RPD specified recovery limits.

If there are any questions regarding this data, please call Phoenix Client Services at extension 200.

RPD - Relative Percent Difference
LCS - Laboratory Control Sample
LCSD - Laboratory Control Sample Duplicate
MS - Matrix Spike
MS Dup - Matrix Spike Duplicate
NC - No Criteria
Intf - Interference

Phyllis Shiller, Laboratory Director
March 18, 2019

Monday, March 18, 2019

Criteria: None

State: MA

Sample Criteria Exceedances Report

GCC66915 - CDW-PCB

SampNo	Acode	Phoenix Analyte	Criteria	Result	RL	Criteria	RL Criteria	Analysis Units
CC66922	$PCB_SOXR	PCB-1254	MA / Requested PCB RL /	1400	720	1000	1000	ug/Kg

Phoenix Laboratories does not assume responsibility for the data contained in this exceedance report. It is provided as an additional tool to identify requested criteria exceedences. All efforts are made to ensure the accuracy of the data (obtained from appropriate agencies). A lack of exceedence information does not necessarily suggest conformance to the criteria. It is ultimately the site professional's responsibility to determine appropriate compliance.

Environmental Laboratories, Inc.
587 East Middle Turnpike, P.O.Box 370, Manchester, CT 06045
Tel. (860) 645-1102 Fax (860) 645-0823

ACCREDITED IN ACCORDANCE WITH nelac NY # 11301

Analysis Comments

March 18, 2019 SDG I.D.: GCC66915

The following analysis comments are made regarding exceptions to criteria not already noted in the Analysis Report or QA/QC Report: None.

Cooler: Yes [X] No [ ]
Coolant: IPK [X] ICE [ ] No [ ]
Temp 1.8 °C Pg of

PHOENIX
Environmental Laboratories, Inc.

CHAIN OF CUSTODY RECORD

587 East Middle Turnpike, P.O. Box 370, Manchester, CT 06040
Email: info@phoenixlabs.com Fax (860) 645-0823
Client Services (860) 645-8726

Data Delivery/Contact Options:
[ ] Fax:
[ ] Phone:
[ ] Email: scahalan@cdwconsultants.com

Customer: CDW Consultants
Address: 6 Huron Drive
Natick MA 01760

Project: Fuller Middle School
Report to: Susan Cahalan
Invoice to: CDW Consultants
QUOTE #

Project P.O:

This section MUST be completed with Bottle Quantities.

Client Sample - Information - Identification

Sampler's Signature: Date: 3/12/19

Matrix Code:
DW=Drinking Water **GW**=Ground Water **SW**=Surface Water **WW**=Waste Water
RW=Raw Water **SE**=Sediment **SL**=Sludge **S**=Soil **SD**=Solid **W**=Wipe **OIL**=Oil
B=Bulk **L**=Liquid

Analysis Request: PCBs 4035/8082 Soxhlet

PHOENIX USE ONLY SAMPLE #	Customer Sample Identification	Sample Matrix	Date Sampled	Time Sampled	PCBs 4035/8082 Soxhlet	GL Amber 8 oz w/H2SO4 Baggie	Soil VOA Vials [ ] methanol [ ] H2O	GL Soil container (4) oz	GL Soil container ( ) oz	40 ml VOA Vial [ ] As is [ ] HCl	GL Amber 1000ml [ ] As is [ ] H2SO4	PL As is [ ] 250ml [ ] 1000ml	PL H2SO4 [ ] 250ml [ ] 500ml	PL HNO3 250ml	PL NaOH 250ml	Bacteria Bottle w/thio	Bacteria Bottle as is
100915	PCB-1A Interior steel beam caulk	SD	3/11/19	1430	X												
100916	PCB-1B " "			1435	X												
100917	PCB-2A ext. window glaze Cafe			1445	X												
100918	PCB-2B " "			1450	X												
100919	PCB-3A ext window glaze - A wing			1500	X												
100920	PCB-3B " "			1515	X												
100921	PCB-4A ext. window glaze B wing			1530	X												
100922	PCB-4B " "			1535	X												
100923	PCB-5A ext. window glaze - C wing			1545	X												
100924	PCB-5B " "			1600	X												
100925	PCB-6 Interior caulk C-10			1620	X												
100926	PCB-7 ext. door caulk #1			1625	X												

Relinquished by:	Accepted by:	Date:	Time:
		3/12/19	13:45
	Raymond Mill	3/13/19	1524

Comments, Special Requirements or Regulations:
TSCA Detection Limits.

Turnaround:
[ ] 1 Day*
[ ] 2 Days*
[ ] 3 Days*
[X] Standard
[ ] Other
* SURCHARGE APPLIES

RI
[ ] Direct Exposure (Residential)
[ ] GW
[ ] Other

CT
[ ] RCP Cert
[ ] GW Protection
[ ] SW Protection
[ ] GA Mobility
[ ] GB Mobility
[ ] Residential DEC
[ ] I/C DEC
[ ] Other

MA
[ ] MCP Certification
[ ] GW-1
[ ] GW-2
[ ] GW-3
[ ] S-1
[ ] S-2
[ ] S-3
[ ] MWRA eSMART
[ ] Other

State where samples were collected: MA

Data Format
[ ] Excel
[ ] PDF
[ ] GIS/Key
[ ] EQuIS
[ ] Other

Data Package
[ ] Tier II Checklist
[ ] Full Data Package*
[ ] Phoenix Std Report
[ ] Other
* SURCHARGE APPLIES

Pg 2 of 2

Cooler: Yes ☒ No ☐
Coolant: IPK ☐ ICE ☐ No ☐
Temp 1.8 Pg of

PHOENIX Environmental Laboratories, Inc.

CHAIN OF CUSTODY RECORD

587 East Middle Turnpike, P.O. Box 370, Manchester, CT 06040
Email: info@phoenixlabs.com Fax (860) 645-0823
Client Services (860) 645-8726

Data Delivery/Contact Options:
☐ Fax:
☐ Phone:
☒ Email: scahoon@cavconsulting.com

Customer: CAV Consulting
Address: 10 Huron Drive, Natick MA 01760

Project: Fuller Middle School
Report to: Susan Cahoon
Invoice to: CAV
QUOTE #

Project P.O:

This section MUST be completed with Bottle Quantities.

Client Sample - Information - Identification

Sampler's Signature: Date: 3/12/19

Matrix Code:
DW=Drinking Water **GW**=Ground Water **SW**=Surface Water **WW**=Waste Water
RW=Raw Water **SE**=Sediment **SL**=Sludge **S**=Soil **SD**=Solid **W**=Wipe **OIL**=Oil
B=Bulk **L**=Liquid

Analysis Request: PCBs 4025/8082 Soxhlet

PHOENIX USE ONLY SAMPLE #	Customer Sample Identification	Sample Matrix	Date Sampled	Time Sampled	PCBs 4025/8082 Soxhlet	~~GL Amber 8 oz. w/H3PO4~~	Soil VOA Vials [ ] methanol [ ] H2O	GL Soil container (4) oz	GL Soil container ( ) oz	40 ml VOA Vial [ ] As is [ ] HCl	GL Amber 1000ml [ ] As is [ ] H2SO4	PL As is [ ] 250ml [ ] 500ml [ ] 1000ml	PL H2SO4 [ ] 250ml [ ] 500ml	PL HNO3 250ml	PL NaOH 250ml	Bacteria Bottle w/thio	Bacteria Bottle as is
W0927	PCB-8 ext door caulk #3	SD	3/11/19	1645	X			1									
W0928	PCB-9A ext window caulk			1650	X			1									
W0929	PCB-9B " "			1700	X			1									
W0930	PCB-10A Floor tile mastic C wing			1730	X				1								
W0931	PCB-10B " " B wing			1745	X				1								
W0932	PCB-10C " " A wing			1800	X				1								
W0933	PCB-10D " " B wing	↓	↓	1815	X				1								

Relinquished by:	Accepted by:	Date:	Time:
		3/12/19	13:45
	Kathy Murrill	3.13.19	1524

Comments, Special Requirements or Regulations:
See pg 1

Turnaround:
☐ 1 Day*
☐ 2 Days*
☐ 3 Days*
☒ Standard
☐ Other
* SURCHARGE APPLIES

RI
☐ Direct Exposure (Residential)
☐ GW
☐ Other

CT
☐ RCP Cert
☐ GW Protection
☐ SW Protection
☐ GA Mobility
☐ GB Mobility
☐ Residential DEC
☐ I/C DEC
☐ Other

MA
☐ MCP Certification
☐ GW-1
☐ GW-2
☐ GW-3
☐ S-1
☐ S-2
☐ S-3
☐ MWRA eSMART
☐ Other

Data Format
☐ Excel
☐ PDF
☐ GIS/Key
☐ EQuIS
☐ Other

Data Package
☐ Tier II Checklist
☐ Full Data Package*
☐ Phoenix Std Report
☐ Other

State where samples were collected: MA

* SURCHARGE APPLIES

DO NOT REMOVE
THIS PAGE INTENTIONALLY LEFT BLANK