© 2014 PIVOT ARCHITECTURE

GENERAL NOTES

- GENERAL

A. THESE DRAWINGS ARE COPY RIGHTED INSTRUMENTS OF SERVICE OF HOHBACH-LEWIN, INC. FOR USE ONLY ON THIS PROJECT.

B. CONTRACTOR RESPONSIBILITY - CONSTRUCTION DOCUMENTS REPRESENT THE FINISHED STRUCTURE. THE CONTRACTOR IS SOLELY RESPONSIBLE FOR CONSTRUCTION MEANS, METHODS, SEQUENCES AND SAFETY PRECAUTIONS, INCLUDING BUT NOT LIMITED TO SHORING AND TEMPORARY BRACING.

C. DIMENSIONS - USE WRITTEN DIMENSIONS ONLY. VERIFY ALL DIMENSIONS AT JOB SITE BEFORE COMMENCING WORK AND REPORT ANY DISCREPANCIES. WHERE NO DIMENSIONS ARE PROVIDED, OBTAIN CLARIFICATION PRIOR TO PROCEEDING WITH WORK.

D. COORDINATION - OPENINGS THROUGH WALLS AND FLOORS FOR MECHANICAL AND ELECTRICAL SYSTEMS SHALL BE COORDINATED BY CONTRACTOR AND CONSTRUCTED PER TYPICAL DETAILS SHOWN IN THESE DOCUMENTS. NO MECHANICAL OR ELECTRICAL SYSTEM COMPONENTS SHALL BE EMBEDDED IN SLABS OR WALLS UNLESS SPECIFICALLY DETAILED IN THESE DOCUMENTS.

E. OMISSIONS AND CONFLICTS - OMISSIONS OR CONFLICTS BETWEEN VARIOUS ELEMENTS OF THE CONSTRUCTION DOCUMENTS SHOULD BE BROUGHT TO THE ATTENTION OF THE DESIGN TEAM. IF CERTAIN FEATURES ARE NOT FULLY DELINEATED IN THE CONSTRUCTION DOCUMENTS, THEIR CONSTRUCTION SHALL BE OF THE SAME CHARACTER AS FOR SIMILAR CONDITIONS THAT ARE DELINEATED.

F. STRUCTURAL DRAWINGS ARE INTENDED TO BE USED WITH ARCHITECTURAL AND MECHANICAL DRAWINGS. THE CONTRACTOR IS RESPONSIBLE FOR COORDINATING SUCH REQUIREMENTS INTO THEIR SHOP DRAWINGS AND WORK.

G. THERE SHALL BE NO CHANGE IN SIZE OR DIMENSION OF A STRUCTURAL MEMBER, NOR SHALL ANY OPENINGS BE MADE IN ANY STRUCTURAL MEMBER, WITHOUT THE WRITTEN APPROVAL OF THE ENGINEER.

H. THE CONTRACTOR IS RESPONSIBLE FOR LIMITING THE AMOUNT OF CONSTRUCTION LOAD IMPOSED UPON STRUCTURAL FRAMING. CONSTRUCTION LOADS SHALL NOT EXCEED THE DESIGN CAPACITY OF THE FRAMING AT THE TIME THE LOADS ARE IMPOSED.

I. THE CONTRACTOR SHALL INFORM THE ENGINEER IN WRITING OF ANY DEVIATION FROM THE CONTRACT DOCUMENTS.

J. SEE DRAWINGS OTHER THAN STRUCTURAL FOR: TYPES OF FLOOR FINISH AND THEIR LOCATION, DEPRESSIONS IN FLOOR SLABS, OPENINGS IN WALLS AND FLOORS REQUIRED BY ARCHITECTURAL AND MECHANICAL FEATURES, AND ROADWAY PAVING, WALKS, RAMPS, STAIRS, CURBS, ETC.

- CONCRETE MASONRY

A. CONCRETE MASONRY:
   1. UNITS: MEDIUM WEIGHT BLOCKS (INSULATED WHERE REQUIRED), GRADE N, TYPE 1, 3,750 psi UNIT STRENGTH, F'm= 2,500 psi.
   2. GROUT: COMPRESSIVE STRENGTH OF 2,500 PSI AT 28 DAYS,
   3. MORTAR: ASTM C270, TYPE S., 1800 PSI

- CONCRETE

A. CONCRETE: 3,000psi MINIMUM AT 28 DAYS

- REINFORCING STEEL

A. REINFORCING STEEL SHALL BE PLACED IN ACCORDANCE WITH ACI 315 AND ACI 318.

B. REINFORCING STEEL SHALL BE AS FOLLOWS:
   1. BARS: ASTM A615, GRADE 60 TYP. U.O.N.
   2. WELDED BARS: ASTM A706
   3. TIE WIRES AND SPIRALS: ASTM A82
   4. WELDED WIRE FABRIC: ASTM A185
   5. MECHANICAL BAR SPLICE: NOT ALLOWED UNLESS APPROVED BY ENGINEER.

C. DO NOT FIELD BEND OR STRAIGHTEN IN ANY MANNER THAT WILL DAMAGE REINFORCING.

D. PROVIDE SPLICES IN REINFORCING ONLY WHERE SHOWN ON DRAWINGS OR APPROVED IN WRITING BY ENGINEER OF RECORD.

E. WELDING TO CONFORM TO AWS D1.4

- STEEL

A. STRUCTURAL STEEL TO BE SUPPLIED DETAILED, FABRICATED AND ERECTED IN ACCORDANCE WITH A.I.S.C. SPECIFICATIONS.

B. U.O.N. STEEL SHALL BE AS FOLLOWS:
   1. WIDE FLANGE SHAPES: ASTM A992
   2. HOLLOW STRUCTURAL SECTIONS: ASTM A500B
   3. PIPES: ASTM A53, GR. B
   4. OTHER SHAPES AND PLATES: ASTM A36, ASTM A572 GR. 50 AS NOTED.
   5. BOLTS: ASTM A307
   6. HIGH STRENGTH BOLTS: ASTM A325, U.O.N.
   7. THREADED RODS: ASTM A36, U.O.N.
   8. ANCHOR RODS: F1554 GR. 36 TYP., U.O.N. AS GR. 55
   9. WELDING ELECTRODES: E-70xx U.O.N.
   10. WELDED STUDS: FLUX FILLED HEADED STUDS CONFORMING TO ASTM A108 BY NELSON OR EQUAL.

C. WELDING TO CONFORM TO AWS AND TO BE PERFORMED BY CERTIFIED WELDERS.

D. BUTT WELDS ARE TO BE COMPLETE PENETRATION U.O.N. ALL FILLET WELDS SHOWN ARE MINIMUM REQUIRED BY STRESS. INCREASE WELDS TO A.I.S.C. MINIMUM SIZES BASED ON THICKNESS OF MATERIAL JOINED U.O.N.

E. STEEL BEAMS ARE EQUALLY SPACED BETWEEN DIMENSION POINTS OR GRID LINES, U.O.N.

F. STEEL NOT RECEIVING FIRE PROOFING SHALL BE SHOP PRIMED.

G. ALL STEEL EXPOSED TO WEATHER SHALL BE HOT DIP ZINC GALVANIZED U.O.N.

H. NON SHRINK GROUT: 7000 psi COMPRESSIVE STRENGTH (28 DAYS), NON METALLIC CONFORMING TO ASTM 1107. MASTERFLOW 928 OR APPROVED EQUAL.

I. FOR SPECIAL REQUIREMENTS FOR THE SEISMIC LOAD RESISTING SYSTEM SEE SHEETS: S103, S104 AND S105.

- STEEL DECK
  DECK: BY VERCO OR APPROVED EQUIVALENT SEE DET. 1/S102

- OPEN WEB STEEL JOIST:
  SEE DETAIL 1/S106

- LIGHT GAUGE STEEL

A. COLD FORM STEEL USED FOR STUDS, TRACK, BLOCKING, GUSSETS, BRACE STRAPS, ETC. SHALL MEET THE REQUIREMENTS OF THE STEEL STUD MANUFACTURERS ASSOCIATION (SSMA) ICC-ES EVALUATION REPORT NO. 3064P DATED FEBRUARY 2014. SEE DETAIL SHEETS FOR SIZES AND THICKNESS REQUIREMENTS.

B. COLD FORM STEEL STUD FRAMING SHALL CONFORM TO THE FOLLOWING:
   54 MIL AND HEAVIER-ASTM A653 SS (50 ksi MINIMUM YIELD)
   43 MIL AND LIGHTER-ASTM A653 SS (33 ksi MINIMUM YIELD)
   ALL MEMBERS : GALVANIZED G60 MIN.

C. ALL STEEL STUDS, JOIST & TRACK SHALL HAVE A LEGIBLE LABEL, STAMP OR EMBOSSMENT, AT A MAXIMUM OF 48 " O.C., INDICATING THE MANUFACTURER'S NAME, LOGO OR INITIALS, EVALUATION SERVICE REPORT NUMBER, THE MATERIAL BASE METAL THICKNESS (UNCOATED) IN .001 in. AND THE YIELD STRENGTH IF DIFFERENT THAN 33 ksi.

D. MILL CERTIFICATES FROM THE COIL PRODUCER SHALL BE MADE AVAILABLE IF REQUESTED. MILL CERTIFICATE TO INCLUDE AS A MINIMUM THE CHEMICAL COMPOSITION, YIELD STRENGTH, TENSILE STRENGTH, ELONGATION, AND COATING THICKNESS.

E. ALL SECTIONS TO REMAIN UNPINCHED EXCEPT WALL STUDS MAY BE PINCHED IN ACCORDANCE WITH ICC HOLE SIZE AND SPACING LIMITATIONS.

F. LATERAL BRIDGING OF COLD FORM STEEL STUDS IS REQUIRED WHEN SHEATHING INSTALLED DOES NOT CONTINUE FULL HEIGHT ON BOTH SIDES. FOR BRIDGING INSTALLATION SEE TYPICAL DETAIL SHEET.

G. COLD FORM STEEL STUDS SHALL HAVE FULL BEARING AGAINST INSIDE TRACK WEB PRIOR TO STUD AND TRACK ATTACHMENT. STUDS AND TRACKS SHALL BE ATTACHED BY WELDING OR 2-#8 SELF DRILLING SCREWS (ONE EA. FLANGE).

H. PRE-MANUFACTURED HANGERS, CLIPS, ETC. SHALL MEET THE REQUIREMENTS OF "SIMPSON" OR EQUIVALENT.

I. VERTICLIP SL/SLD BY THE STEEL NETWORK ICC ESR-1903 OR APPROVED EQUAL.

J. SELF-DRILLING FASTENERS HAVE BEEN DESIGNED IN ACCORDANCE WITH AISI "SPECIFICATION PROVISIONS FOR SCREW CONNECTIONS". FASTENERS SHALL BE #8 SMS U.O.N. ALL SCREWS TO BE GALVANIZED OR CORROSION RESISTANT. SCREWS SHALL CONFORM TO S.A.E. J78.

K. WELDING SHALL BE PERFORMED BY CERTIFIED WELDERS IN A FABRICATION SHOP. ALL WELDING SHALL BE IN ACCORDANCE WITH THE REQUIREMENTS OF THE LATEST AWS D1.3 CODE.
   43 MIL AND LIGHTER SHEET TO SHEET - E60XX
   54 MIL AND HEAVIER SHEET TO SHEET - E70XX

L. BUTT WELDS ON SPLICES SHALL BE USED AT ALL JOINTS IN TRACK. SPLICES IN STUDS OR BRACES SHALL NOT BE PERMITTED. WHERE STUDS ARE BURNED THROUGH BY WELDING PROVIDE SUITABLE STITCH PLATE OF SAME THICKNESS.

- LVF-(Low Velocity Fasteners). HILTI, ICC ESR-2264 (12/1/2012)

A. IN NORMAL WEIGHT CONCRETE: 0.157"ø X-U FASTENER, 1" MIN. EMBEDMENT 3" EDGE DISTANCE, MIN. 4" O.C. SPACING.

B. IN STRUCTURAL STEEL: 0.157"ø X-U FASTENER, 1/2" MIN. EDGE DISTANCE, 1" MIN. SPACING. THE ENTIRE POINTED PORTION OF L.V.F. MUST COMPLETELY PENETRATE THE STEEL.

- MISCELLANEOUS

A. EXPANSION ANCHORS: HILTI KWIK BOLT TZ (AT CONCRETE) OR APPROVED

B. EPOXY ADHESIVE: HILTI HIT-HY 200 (AT CONCRETE), HY 150 MAX (AT CMU) OR APPROVED. USE APPROVED ACRYLIC ADHESIVE IN LIEU OF 2-PART EPOXY IN COLD WEATHER APPLICATIONS.

C. SCREW ANCHORS: SIMPSON TITEN HD (AT CONCRETE) OR APPROVED.

TESTING, SPECIAL INSPECTION AND OBSERVATION

(1) THE FOLLOWING WORK IS REQUIRED IF MARKED TO BE TESTED, SPECIAL INSPECTED, OR STRUCTURALLY OBSERVED, PER OSSC CHAPTER 17 REQUIREMENTS. TESTING SHALL BE MADE IN ACCORDANCE WITH THE CURRENT CODE BY AN APPROVED SPECIAL TESTING LAB, SPECIAL INSPECTOR, AND OR BY AN ENGINEER RETAINED BY THE OWNER.
(2) OBSERVATION SHALL BE DONE BY THE ENGINEER OF RECORD, EXCEPT PER NOTE 3. STRUCTURAL OBSERVATION BY THE ENGINEER OF RECORD WILL BE PERFORMED AT ALL KEY PHASES OF THE STRUCTURAL WORK.
(3) COMPACTION TESTING, & GRADING OPERATIONS SHALL BE OBSERVED BY A GEOTECHNICAL ENGINEER IF COMPACTED FILL IS REQUIRED.
(4) INSPECTION MAY BE PERIODIC.
(5) SCREW ATTACHMENT, BOLTING AND OTHER FASTENING FOR SHEARWALLS, COLLECTORS AND HOLDOWNS

ITEM	TO BE PROVIDED IF MARKED (1)		
	TESTING	SPECIAL INSPECTION	ENGINEERS OBSERVATION (2)
STRUCTURAL FILLS COMPACTION (3)	X (3)	X	X (3)
REINFORCING FOR CONCRETE (EXCEPT NON STRUCTURAL CURBS, PADS AND SITEWORK)			X
ANCHOR BOLT PLACEMENT			X
CONCRETE STRENGTH	X		
CONCRETE PLACEMENT (EXCEPT NON-STRUCUTRAL CURBS, PADS AND SITEWORK)		X	
CONCRETE ADHESIVE (EPOXY) ANCHORS		X (4)	
EXPANSION ANCHORS		X (4)	
STRUCTURAL WELDING (OSSC TABLE 1704.3)		X	
STRUCTURAL STEEL FOR SLRS/WLRS (SEE DET. 2/S105)		X	X
HIGH STRENGTH BOLTING	X	X	X
STRUCTURAL STEEL			X
STEEL DECK & LIGHT GAGE STEEL WELDS		X	
REINFORCING FOR CMU CONSTRUCTION		X	
CMU CONSTRUCTION		X	X
GROUT FOR CMU CONSTRUCTION	X		
COLD-FORMED STEEL LIGHT-FRAME CONSTRUCTION FOR SLRS/WLRS		X (5)	X

BASIS OF DESIGN

APPLICABLE CODE: 2014 OREGON STRUCTURAL SPECIALTY CODE (2012 INTERNATIONAL BUILDING CODE WITH 2014 OSSC AMMENDMENTS)

RISK CATEGORY: II

VERTICAL LOADS:

ROOFS:
LIVE LOAD 20 psf

SNOW LOAD Pg = 15 psf
IMPORTANCE FACTOR: Is = 1.1
SNOW EXPOSURE FACTOR, Ce = 1.0
THERMAL FACTOR, Ct = 1.1
Pf = 13 psf PLUS DRIFT, SLIDING AND UNBALANCED SNOW LOAD AS REQ'D PER OSSC 2014/ASCE 7-10
Pf,min = 22 psf (TYP. U.O.N.)
Pf,min = 21 psf (LOBBY/ADMIN)

FLOORS:
LIVE LOAD 55 psf AT CLASSROOMS (40psf + 15 psf PARTITIONS)
80 psf AT CORRIDORS ABOVE THE FIRST FLOOR
100 psf AT BALCONIES

LATERAL LOADS:

WIND: ULTIMATE WIND SPEED: 130 mph (3 SECOND GUST)
EXPOSURE CATEGORY: C
INTERNAL PRESSURE COEFFICIENT = 0.18 (FULLY ENCLOSED)

SEISMIC: IMPORTANCE FACTOR: Ie = 1.25
MAPPED SPECTRAL ACCELERATIONS: Ss = 0.80g, S1 = 0.41g
SITE CLASS: C
SPECTRAL RESPONSE COEFFICIENTS: Sds = 0.57g, Sd1 = 0.38g
BASIC SEISMIC FORCE RESISTING SYSTEMS:
STEEL SPECIAL CONCENTRICALLY BRACED FRAME (SECTORS A & B)
SPECIAL CMU SHEAR WALLS (SECTOR C)

RESPONSE MODIFICATION FACTOR: R = 6.0 (SECTORS A & B)
R = 5.0 (SECTOR C)

SEISMIC DESIGN CATEGORY: D
SEISMIC RESPONSE COEFFICIENT: Cs = 0.119g (SECTORS A & B)
Cs = 0.143g (SECTOR C)

SEISMIC DESIGN BASE SHEAR: v = 0.119 W (STR LEVEL - SECTORS A & B)
v = 0.143W (STR LEVEL - SECTOR C)

THE EQUIVALENT STATIC FORCE PROCEDURES OF THE 2014 OSSC AND ASCE-7 (2010 EDITION) HAVE BEEN USED TO DESIGN THE PRIMARY SEISMIC FORCE ELEMENTS OF THE BUILDINGS.

GEOTECHNICAL CRITERIA:

FOUNDATIONS HAVE BEEN DESIGNED IN ACCORDANCE WITH THE GEOTECHNICAL REPORT PREPARED FOR RIVER ROAD ELEMENTARY SCHOOL BY FOUNDATION ENGINEERING, INC. DATED APRIL 2, 2015.

ALLOWABLE SOIL BEARING PRESSURE = 2200psf AT STRIP FOOTINGS (DEAD PLUS LIVE LOADS)
= 2933psf AT STRIP FOOTINGS (SHORT TERM LOADS)
= 2500psf AT SPREAD FOOTINGS (DEAD PLUS LIVE LOADS)
= 3333psf AT SPREAD FOOTINGS (SHORT TERM LOADS)

STRUCTURAL SHEET INDEX

S001	STRUCTURAL NOTES AND SYMBOLS
S111	SECTOR A - FOUNDATION PLAN
S112	SECTOR B - FOUNDATION PLAN
S113	SECTOR C - FOUNDATION PLAN
S121	SECTOR A - SECOND FLOOR FRAMING PLAN
S122	SECTOR B - SECOND FLOOR/ LOW ROOF FRAMING PLAN
S131	SECTOR A, B & C - MECHANICAL PLATFORM FRAMING PLANS
S141	SECTOR A - ROOF FRAMING PLAN
S142	SECTOR B - ROOF FRAMING PLAN
S143	SECTOR C - ROOF FRAMING PLAN
S401	SITE STRUCTURE DETAILS
S501	TYPICAL CONCRETE DETAILS
S502	CONCRETE DETAILS
S503	CONCRETE DETAILS
S601	CMU DETAILS
S701	TYPICAL STEEL DETAILS
S702	TYPICAL STEEL DETAILS
S703	STEEL BRACED FRAME ELEVATIONS
S704	STEEL BRACED FRAME ELEVATIONS AND DETAILS
S705	STEEL BRACED FRAME DETAILS
S706	OWSJ DETAILS
S707	STEEL DETAILS
S708	STEEL DETAILS
S709	STEEL DETAILS
S710	STEEL DETAILS
S801	LIGHT GAUGE FRAMING DETAILS
S802	LIGHT GAUGE FRAMING DETAILS
S803	LIGHT GAUGE FRAMING DETAILS

STRUCTURAL SHOP DRAWING/ SUBMITTALS

SHOP DRAWINGS SHALL BE SUBMITTED FOR THE FOLLOWING ITEMS OF WORK:
1. CONCRETE MIX DESIGNS
2. REINFORCING FOR CONCRETE AND CMU CONSTRUCTION
3. STRUCTURAL STEEL
4. MISC. METAL FABRICATIONS
5. STEEL DECK

SHOP DRAWINGS AND STRUCTURAL CALCULATIONS BEARING THE SEAL OF OREGON PROFESSIONAL ENGINEER SHALL BE SUBMITTED FOR THE FOLLOWING ITEMS OF WORK:
1. STOREFRONT/ CURTAIN WALL SYSTEM
2. OPEN WEB STEEL JOISTS

ABBREVIATIONS

&	AND	LONG. TRAN.	LONGITUDINAL TRANSVERSE
@	AT	L.V.F.	LOW-VELOCITY FASTENER
A.B.	ANCHOR BOLT	MAX.	MAXIMUM
ARCH.	ARCHITECTURAL	M.B.	MACHINE BOLTS (UNFINISHED)
BLDG.	BUILDING	MIN.	MINIMUM
BLKG.	BLOCKING	(N)	NEW
BM.	BEAM	N.S.	NEAR SIDE
B.N.	BOUNDARY NAIL	NTS.	NOT TO SCALE
B.O.	BOTTOM OF	O.C.	ON CENTER
B.O.C.	BOTTOM OF CONCRETE	OPP.	OPPOSITE
BTM.	BOTTOM	OPG	OPENING
BTWN	BETWEEN	OWSJ	OPEN WEB STEEL JOIST
℄	CENTER LINE	PL	PLATE
C.G.S.	CENTER OF GRAVITY OF POST-TENSIONING STRAND	PLY.	PLYWOOD
C.J.	CONTROL JOINT	P/T	POST TENSIONING
C.J.P.	COMPLETE JOINT PENETRATION	R.C.J.	ROUGHENED CONSTRUCTION JOINT
CLR.	CLEAR COVER	REINF.	REINFORCEMENT
COL.	COLUMN	REQD.	REQUIRED
CONC.	CONCRETE	S.A.D.	SEE ARCHITECTURAL DRAWINGS
CONT.	CONTINUOUS	S.C.D.	SEE CIVIL DRAWINGS
DBL.	DOUBLE	SCHED.	SCHEDULE
DBO.	DRAWING BY OTHER	S.D.B.O.	SEE DRAWINGS BY OTHERS
DET.	DETAIL	SIM.	SIMILAR
D.C.	DEMAND CRITICAL	S.J.	SEISMIC JOINT
D.F.	DOUGLAS FIR	SLRS	SEISMIC LOAD RESISTING SYSYEM
DWG.	DRAWING	S.M.D.	SEE MECHANICAL DRAWINGS
(E)	EXISTING	S.M.S.	SHEET METAL SCREW
EA.	EACH	S.O.G.	SLAB ON GRADE
EL.	ELEVATION	SPEC.	SPECIFICATION
EN.	EDGE NAIL	SQ.	SQUARE
EW.	EACH WAY	SYM.	SYMMETRICAL
EXT.	EXTERIOR	T&B	TOP AND BOTTOM
FDN.	FOUNDATION	T&G	TONGUE AND GROOVE
FIN.	FINISH	T.D.	TIE DOWN
FLR.	FLOOR	T.O.C.	TOP OF CONCRETE
F.N.	FIELD NAIL	T.O.F.	TOP OF FINISH
F.O.C.	FACE OF CONCRETE	T.O.S.	TOP OF STEEL FRAMING
F.O.S.	FACE OF STUD	T.P.	TOP OF PLATE
F.S.	FAR SIDE	TYP.	TYPICAL
FTG.	FOOTING	U.O.N.	UNLESS OTHERWISE NOTED
G.C.	GENERAL CONTRACTOR	VERT.	VERTICAL
H.D.	HOLD DOWN	V.I.F.	VERIFY IN FIELD
HDR.	HEADER	W/	WITH
HORIZ.	HORIZONTAL	W/O	WITHOUT
HSS	HOLLOW STEEL SECTION	WF	WIDE FLANGE
J.H.	JOIST HANGER	WLRS	WIND LOAD RESISTING SYSTEM

PIVOT ARCHITECTURE

STRUCTURAL ENGINEER
REGISTERED PROFESSIONAL ENGINEER
55387PE
Vikki Bowman
OREGON
JAN 23 2015
VIKKI H. BOWMAN
Expires: 12-31-17

IBI GROUP

Iowa

HOHBACH-LEWIN, INC.
STRUCTURAL ENGINEERS
Suite 302
296 East 5th Ave.
Eugene, OR 97401
(541) 343-3702 Fax (541) 343-1702

BID DOCUMENT SET

EUGENE SCHOOL DISTRICT 4J
120 WEST HILLARD AVENUE, EUGENE OREGON 97404

RIVER ROAD / EL CAMINO DEL RIO ELEMENTARY SCHOOL

STRUCTURAL NOTES AND SYMBOLS

PROJECT #	1337
ISSUE DATE:	02.12.2015
DRAWN:	AMA
CHECKED:	VHB
REVISIONS:	

S001

H-L #95472

© 2014 PIVOT ARCHITECTURE

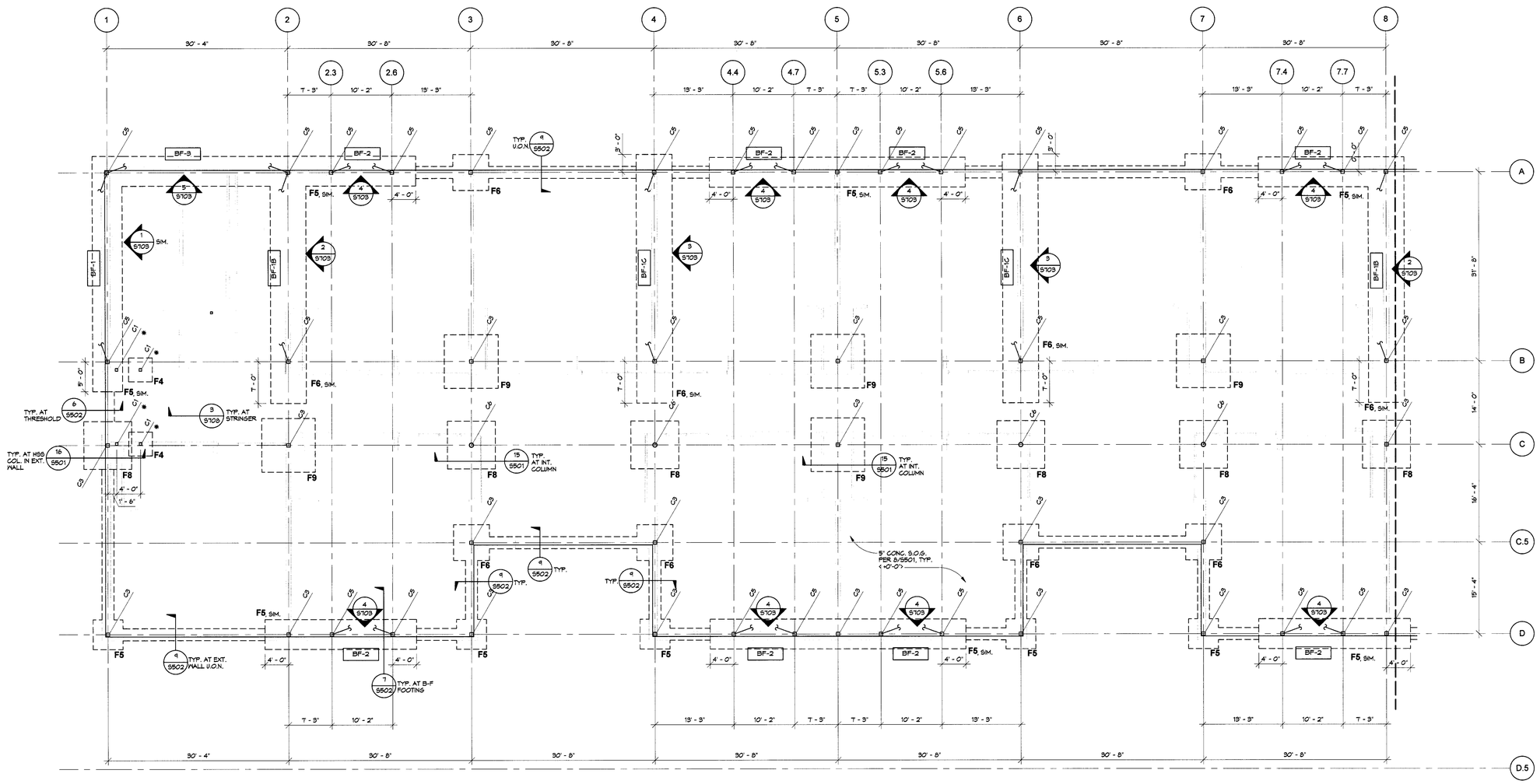

1 SECTOR A - FOUNDATION PLAN
1/8" = 1'-0"

FOUNDATION PLAN NOTES

1. SEE ARCHITECTURAL DRAWINGS FOR ALL INTERIOR DIMENSIONS, WALLS, WALL OPENINGS, DIMENSIONS NOT PROVIDED AND MISC. ARCHITECTURAL FEATURES.
2. SEE S001 FOR GENERAL STRUCTURAL NOTES AND SYMBOLS.
3. SEE CIVIL DRAWINGS FOR TOP OF FINISHED FLOOR DATUM ELEV= TOP OF FINISHED FLOOR SLAB REL. ELEV. + 0'-0"
4. REL. ELEV. OF TOP OF FOOTING = -1'-4", TYP. U.O.N. THUS: T.O. FTG -2'-0"
5. SEE SHEET S501 FOR TYPICAL CONCRETE DETAILS.

FOUNDATION PLAN SYMBOLS

- DENOTES CONT. SPREAD FOOTING
- DENOTES ISOLATED FOOTING
- FX — DENOTES FOOTING PER SCHEDULE BELOW
- BF-X — DENOTES SPECIAL CONCENTRIC BRACED FRAME, SEE ELEVATIONS ON SHEET S103 AND S104
- DENOTES HSS COLUMN BELOW SECOND FLOOR ONLY PER PLAN, SEE COLUMN SCHEDULE BELOW
- DENOTES HSS COLUMN FULL HEIGHT TO ROOF, SEE COLUMN SCHEDULE BELOW
- C.J. — DENOTES SLAB CONSTRUCTION (POUR) PER 9/S501, SEE ARCHITECTURAL SLAB PLANS FOR BLOCK-OUTS AND OTHER C.J. INFORMATION
- DENOTES SLAB RECESS OR DEPRESSION, SEE ARCHITECTURAL SLAB PLANS FOR DEPTH, SIZES AND LOCATIONS

FOOTING SCHEDULE

MARK	SIZE WIDTH x LENGTH x DEPTH	LONGIT. REINF. (*)	TRANS. REINF. (*)
F4	4'-0" x 4'-0" x 1'-6"	4-#5	4-#5
F5	5'-0" x 5'-0" x 1'-6"	5-#5	5-#5
F5 SIM.	5'-0" x L' x 2'-6"	8-#6 TOP & BTM	SEE DETAIL 7/S502
F6	6'-0" x 6'-0" x 1'-6"	6-#5	6-#5
F6 SIM.	6'-0" x L' x 2'-6"	8-#6 TOP & BTM	SEE DETAIL 7/S502
F8	8'-0" x 8'-0" x 2'-0"	8-#6	8-#6
F9	9'-0" x 9'-0" x 2'-0"	8-#7	8-#7

(*) BOTTOM BARS ONLY UNLESS OTHERWISE NOTED
(L) DENOTES LENGTH SHOWN ON PLAN

COLUMN SCHEDULE

ID	COLUMN SIZE	BASE PL DETAIL
C1	HSS 5x5x1/4	10/S701
C2	5" STD STL PIPE	10/S701
C3	HSS 7x7x3/8	10/S701
C4	HSS 6x6x1/2	6/S703
C5	HSS 7x7x5/8	6/S703
C6	8" X-STRONG STL PIPE	10/S701
C7	10" X-STRONG STL PIPE	(*)

(*) SEE DETAIL CALL-OUT ON PLAN

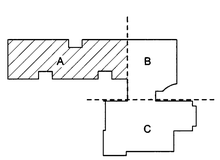

KEY PLAN

PIVOT ARCHITECTURE

STRUCTURAL REGISTERED PROFESSIONAL ENGINEER 95387PE OREGON NIKKI H. BOURDIER Expires: 12.31.15

IBI GROUP

HOHBACH-LEWIN, INC. STRUCTURAL ENGINEERS 2020 Hayes Street, Suite 200 Eugene, OR 97401 (541) 344-1001 · Fax (541) 344-1002

BID DOCUMNET SET
EUGENE SCHOOL DISTRICT 4J
120 WEST HILLIARD AVENUE, EUGENE OREGON 97404
RIVER ROAD / EL CAMINO DEL RIO ELEMENTARY SCHOOL

SECTOR A - FOUNDATION PLAN

PROJECT #:	15.37	REVISIONS:
ISSUE DATE:	10.22.2015	Revision 1 - Date 1
DRAWN:	AMA	
CHECKED:	VHB	

S111

HOHBACH-LEWIN #9547.2

PRINTED ON: 2/11/2016 4:33:29 PM FROM FILE: C:\Users\amata\Documents\9547.2_RS2015_atlas.rvt

© 2014 PIVOT ARCHITECTURE

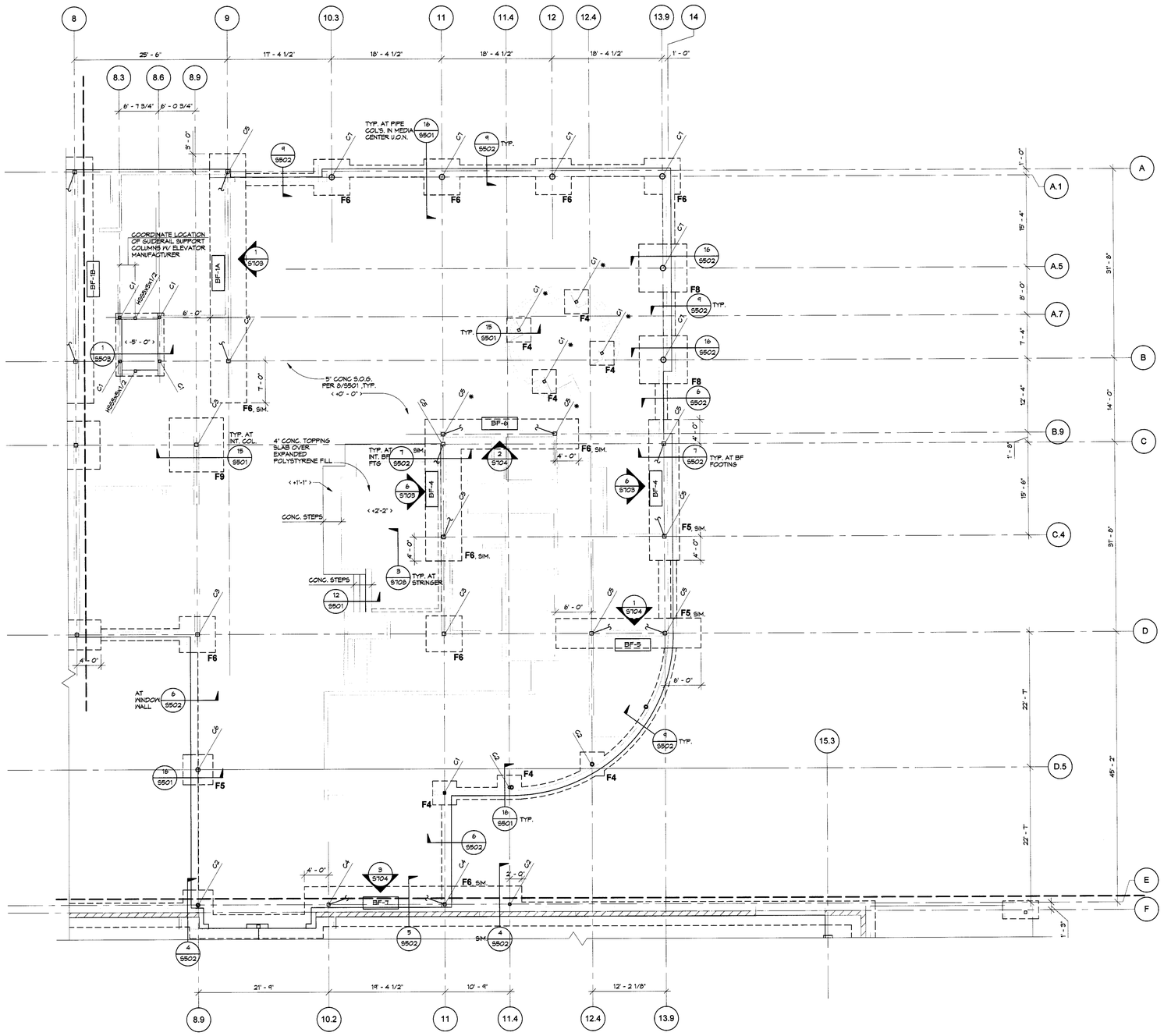

1 SECTOR B - FOUNDATION PLAN
1/8" = 1'-0"

FOUNDATION PLAN NOTES

1. SEE ARCHITECTURAL DRAWINGS FOR ALL INTERIOR DIMENSIONS, WALLS, WALL OPENINGS, DIMENSIONS NOT PROVIDED AND MISC. ARCHITECTURAL FEATURES.
2. SEE S001 FOR GENERAL STRUCTURAL NOTES AND SYMBOLS.
3. SEE CIVIL DRAWINGS FOR TOP OF FINISHED FLOOR DATUM ELEV= TOP OF FINISHED FLOOR SLAB REL. ELEV. = 0'-0"
4. REL. ELEV. OF TOP OF FOOTING = -1'-4", TYP. U.O.N. THUS: T.O. FTG / -2'-0"
5. SEE SHEET S501 FOR TYPICAL CONCRETE DETAILS.

FOUNDATION PLAN SYMBOLS

	DENOTES CONT. SPREAD FOOTING
	DENOTES ISOLATED FOOTING
FX	DENOTES FOOTING PER SCHEDULE BELOW
BF-X	DENOTES SPECIAL CONCENTRIC BRACED FRAME, SEE ELEVATIONS ON SHEET S103 AND S104
	DENOTES HSS COLUMN BELOW SECOND FLOOR ONLY, SEE COLUMN SCHEDULE BELOW
	DENOTES HSS COLUMN FULL HEIGHT TO ROOF, SEE COLUMN SCHEDULE BELOW
C.J.	DENOTES SLAB CONSTRUCTION (POUR) PER 5/S501, SEE ARCHITECTURAL SLAB PLANS FOR BLOCK-OUTS AND OTHER C.J. INFORMATION
	DENOTES SLAB RECESS OR DEPRESSION, SEE ARCHITECTURAL SLAB PLANS FOR DEPTH, SIZES AND LOCATIONS

FOOTING SCHEDULE

MARK	SIZE WIDTH x LENGTH x DEPTH	LONGIT. REINF. (*)	TRANS. REINF. (*)
F4	4'-0" x 4'-0" x 1'-6"	4-#5	4-#5
F5	5'-0" x 5'-0" x 1'-6"	5-#5	5-#5
F5 SIM.	5'-0" x 'L' x 2'-6"	8-#6 TOP & BTM	SEE DETAIL 7/S502
F6	6'-0" x 6'-0" x 1'-6"	6-#5	6-#5
F6 SIM.	6'-0" x 'L' x 2'-6"	8-#6 TOP & BTM	SEE DETAIL 7/S502
F8	8'-0" x 8'-0" x 2'-0"	8-#6	8-#6
F9	9'-0" x 9'-0" x 2'-0"	8-#7	8-#7

(*) BOTTOM BARS ONLY UNLESS OTHERWISE NOTED
(L) DENOTES LENGTH SHOWN ON PLAN

COLUMN SCHEDULE

ID	COLUMN SIZE	BASE PL DETAIL
C1	HSS 5x5x1/4	10/S101
C2	5" STD STL PIPE	10/S101
C3	HSS 7x7x3/8	10/S101
C4	HSS 6x6x1/2	6/S105
C5	HSS 7x7x5/8	6/S105
C6	8" X-STRONG STL PIPE	10/S101
C7	10" X-STRONG STL PIPE	(*)

(*) SEE DETAIL CALL-OUT ON PLAN

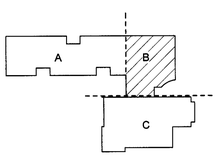

KEY PLAN

PIVOT ARCHITECTURE

STRUCTURAL REGISTERED PROFESSIONAL ENGINEER - 65387PE OREGON JAN 23, 2001 VIKRAM H. BOURICIOS Expires: 12-31-15

IBI GROUP

HOHBACH-LEWIN, INC. STRUCTURAL ENGINEERS 2700 Hilyard Street, Suite 202 Eugene, OR 97405 (541) 344-7002 Fax (541) 345-1702

BID DOCUMNET SET
EUGENE SCHOOL DISTRICT 4J
120 WEST HILLIARD AVENUE, EUGENE OREGON 97404
RIVER ROAD / EL CAMINO DEL RIO ELEMENTARY SCHOOL

SECTOR B - FOUNDATION PLAN

PROJECT #:	1337
ISSUE DATE:	10.22.2015
DRAWN:	JPA
CHECKED:	VHB

REVISIONS: Revision 1 - Date 1

S112

HOHBACH-LEWIN #9547.2

PRINTED ON: 2/11/2016 6:53:04 PM FROM FILE: C:\Users\arlan\Documents\9547.2_RS2015_atlas.rvt

© 2014 PIVOT ARCHITECTURE

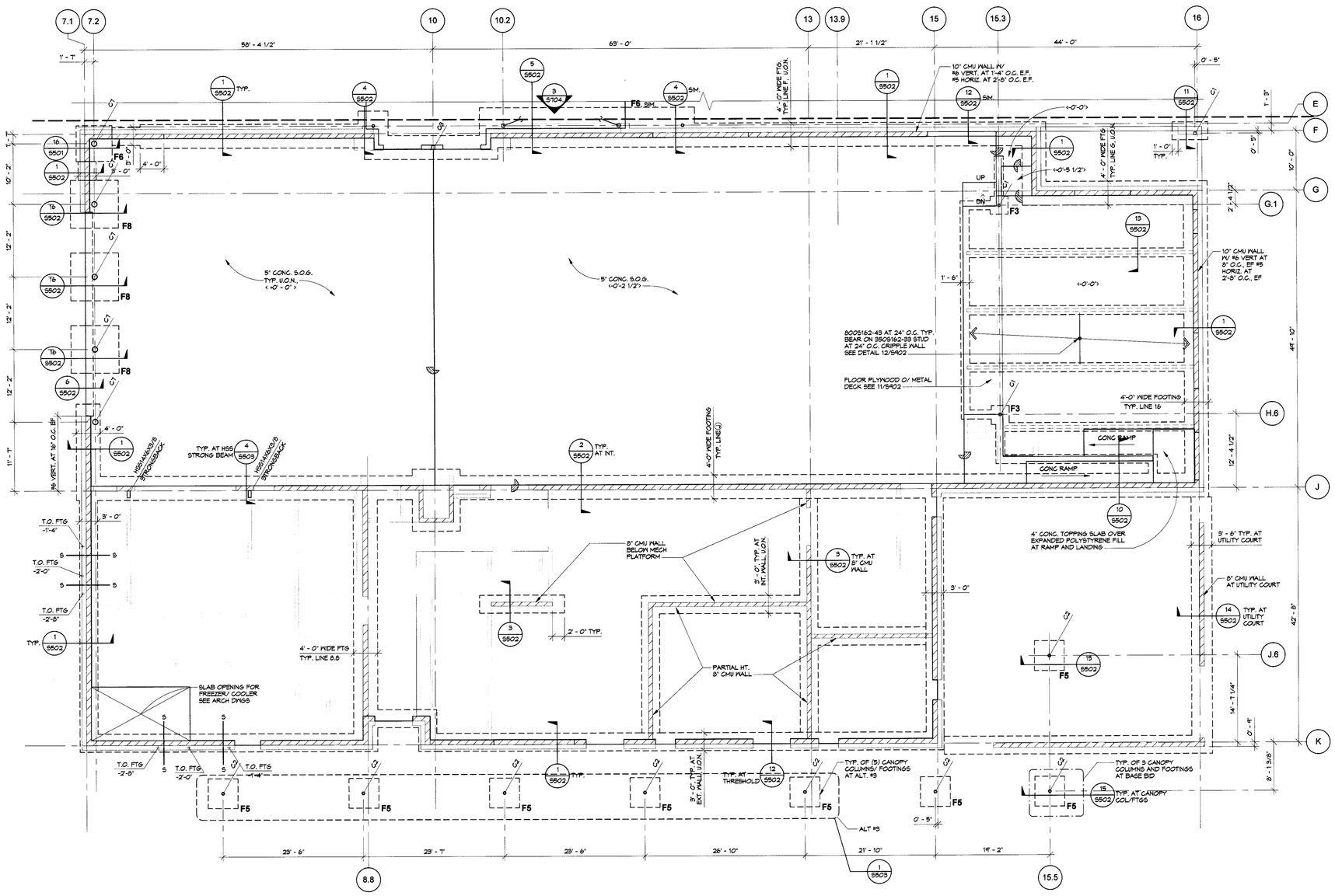

1 SECTOR C - FOUNDATION PLAN
1/8" = 1'-0"

FOUNDATION PLAN NOTES

1. SEE ARCHITECTURAL DRAWINGS FOR ALL INTERIOR DIMENSIONS, WALLS, WALL OPENINGS, DIMENSIONS NOT PROVIDED AND MISC. ARCHITECTURAL FEATURES.
2. SEE S001 FOR GENERAL STRUCTURAL NOTES AND SYMBOLS.
3. SEE CIVIL DRAWINGS FOR TOP OF FINISHED FLOOR DATUM ELEV= TOP OF FINISHED FLOOR SLAB REL. ELEV. = 0'-0"
4. REL. ELEV. OF TOP OF FOOTING = -1'-4", TYP. U.O.N. THUS: T.O. FTG -2'-0"
5. SEE SHEET S501 FOR TYPICAL CONCRETE DETAILS.

FOUNDATION PLAN SYMBOLS

- DENOTES 10" NOMINAL CMU WALL, 8" CMU WALL WHERE NOTED ON PLAN REINFORCING PER 2/S601, U.O.N.
- DENOTES CONT. SPREAD FOOTING
- DENOTES ISOLATED FOOTING
- FX — DENOTES FOOTING PER SCHEDULE BELOW
- C1 — DENOTES HSS COLUMN BELOW SECOND FLOOR ONLY PER PLAN, SEE COLUMN SCHEDULE BELOW
- C1 C1 — DENOTES HSS COLUMN FULL HEIGHT TO ROOF, SEE COLUMN SCHEDULE BELOW
- HSS STRONGBACK — DENOTES HSS "STRONGBACK" COLUMN FULL HEIGHT TO ROOF, SIZE PER PLAN SEE DETAIL -/S- FOR BASE CONNECTION
- C.J. — DENOTES SLAB CONSTRUCTION (POUR) PER 5/S501, SEE ARCHITECTURAL SLAB PLANS FOR BLOCK-OUTS AND OTHER C.J. INFORMATION
- DENOTES SLAB RECESS OR DEPRESSION, SEE ARCHITECTURAL SLAB PLANS FOR DEPTH, SIZES AND LOCATIONS
- S ——— S — DENOTES STEP IN FOOTING, SEE DETAIL 11/S501

FOOTING SCHEDULE			
MARK	SIZE WIDTH x LENGTH x DEPTH	LONGIT. REINF. (**)	TRANS. REINF. (**)
F4	4'-0" x 4'-0" x 1'-6"	4-#5	4-#5
F5	5'-0" x 5'-0" x 1'-6"	5-#5	5-#5
F6	6'-0" x 6'-0" x 1'-6"	6-#5	6-#5
F6 SIM.	6'-0" x 1' x 2'-6"	8-#6 TOP & BTM	SEE DETAIL 7/S502
F8	8'-0" x 8'-0" x 2'-0"	8-#6 TOP & BTM	8-#6 TOP & BTM

(*) INDICATES LENGTH PER PLAN
(**) BOTTOM BARS ONLY UNLESS OTHERWISE NOTED

COLUMN SCHEDULE		
ID	COLUMN SIZE	BASE PL DETAIL
C1	HSS 5x5x1/4	10/S701
C2	5" STD STL PIPE	10/S701
C7	10" X-STRONG STL PIPE	(*)

(*) SEE DETAIL CALL-OUT ON PLAN

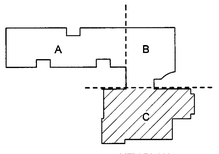

KEY PLAN

PIVOT ARCHITECTURE

STRUCTURAL REGISTERED PROFESSIONAL ENGINEER 65387PE OREGON JAN 23, 2001 VIJAY H. BOURCIER
Expires: 12-31-15

IBI GROUP

dowa

HOHBACH-LEWIN, INC.
STRUCTURAL ENGINEERS
2155 W. 11th AVENUE, SUITE 200
Eugene, OR 97401
(541) 343-7292 - Fax (541) 343-7202

BID DOCUMNET SET
EUGENE SCHOOL DISTRICT 4J
120 WEST HILLIARD AVENUE, EUGENE OREGON 97404
RIVER ROAD / EL CAMINO DEL RIO ELEMENTARY SCHOOL

SECTOR C - FOUNDATION PLAN

PROJECT #:	1337
ISSUE DATE:	10.22.2015
DRAWN:	JPA
CHECKED:	VHB
REVISIONS:	Revision 1 - Date 1

S113

HOHBACH-LEWIN #9547.2

PRINTED ON: 2/11/2016 4:33:31 PM FROM FILE: C:\Users\arnist\Documents\9547.2_RS2015_jetlab.rvt

© 2014 PIVOT ARCHITECTURE

SECOND FLOOR PLAN NOTES

1. SEE S001 FOR GENERAL STRUCTURAL NOTES AND SYMBOLS.
2. T.O. CONCRETE = 14'-0" U.O.N.
3. T.O. STEEL = BOTTOM OF METAL DECK ELEVATION = +13'-6" TYPICAL U.O.N. ON PLAN.
4. FLOOR BEAMS ARE EQUALLY SPACED BETWEEN GRIDS UNLESS OTHERWISE NOTED.
5. SEE ARCH DRAWINGS FOR ALL FLOOR OPENINGS, INCLUDING AT STAIRS AND ELEVATOR.
6. SEE DETAILS 1&2/S101 FOR TYPICAL WF BEAM TO WF BEAM CONNECTION.
7. SEE DETAIL 5/S101 FOR TYPICAL WF BEAM TO HSS COLUMN CONNECTION.
8. SEE 1/S102 FOR STEEL FLOOR DECK ATTACHMENT.
9. SEE SHEETS S101 AND S102 FOR TYPICAL STEEL DETAILS NOT NOTED.
10. PROVIDE 2-#4 CONT. CHORD BARS IN CONCRETE OVER METAL DECK AT PERIMETER, STAIR OPENINGS, RE-ENTRANT CORNERS, BALCONIES, ETC.

SECOND FLOOR PLAN SYMBOLS

- NON-STRUCTURAL WALLS BELOW FLOOR
- NON-STRUCTURAL WALLS ABOVE FLOOR
- STRUCTURAL WALL BELOW (SEE FOUNDATION PLAN FOR TYPE)
- FIRE-TREATED PLYWOOD SHEATHED LIGHT GAUGE METAL STUD SHEARWALL ABOVE THIS LEVEL, SEE SCHEDULE DETAIL 1/S902
- DENOTES BEAM BOTTOM FLANGE BRACING PER DETAIL 8/S102
- DENOTES CONCRETE FILL O/ METAL DECK PER SCHEDULE, DETAIL 1/S102
- [X] DENOTES NUMBER OF SHEAR STUDS, SEE DETAIL 4/S102
- S/HDX DENOTES HOLDOWN PER SCHEDULE, SEE DETAILS 9 & 13/S902
- DENOTES NON-SEISMIC MOMENT RESISTING CONNECTIONS
- DENOTES HSS COLUMN ABOVE 2ND FLOOR
- ◆ WX DENOTES A MEMBER OF THE SEISMIC LOAD RESISTANCE SYSTEM. SEE DETAIL 2/S105 FOR REQUIREMENTS.

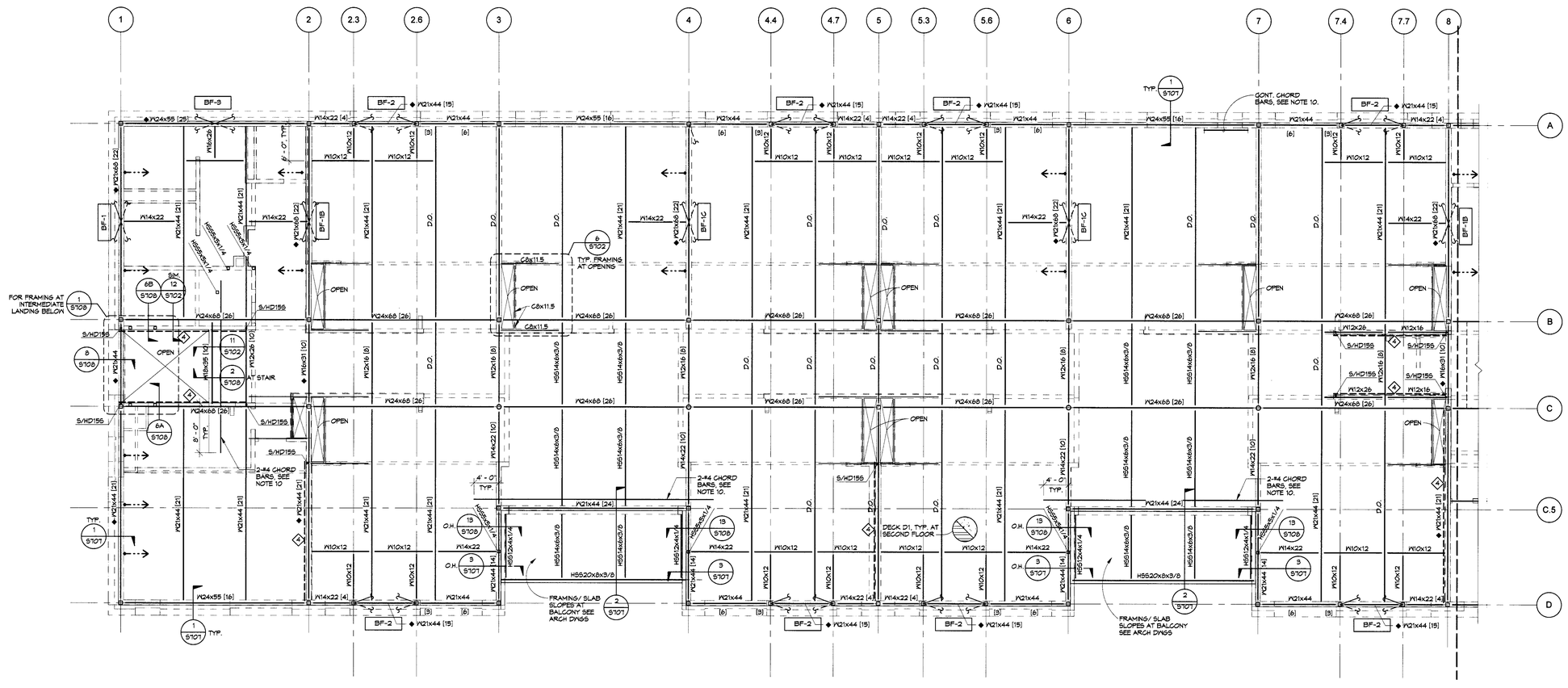

1 SECTOR A - SECOND FLOOR FRAMING PLAN
1/8" = 1'-0"

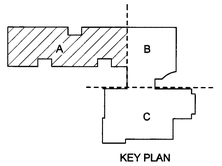

KEY PLAN

PIVOT ARCHITECTURE

STRUCTURAL REGISTERED PROFESSIONAL ENGINEER 65387PE OREGON MAY 29, 2009 VIKRAM N. BOURDIER
Expires: 12-31-16

IBI GROUP

HOHBACH-LEWIN, INC. STRUCTURAL ENGINEERS 2700 Oakmont Way, Suite 202 Eugene, OR 97401 (541) 343-1100 Fax (541) 343-1702

BID DOCUMNET SET
EUGENE SCHOOL DISTRICT 4J
120 WEST HILLARD AVENUE, EUGENE OREGON 97404
RIVER ROAD / EL CAMINO DEL RIO ELEMENTARY SCHOOL

SECTOR A - SECOND FLOOR FRAMING PLAN

PROJECT #:	1337
ISSUE DATE:	10.22.2015
DRAWN:	AMA
CHECKED:	VHB
REVISIONS:	Revision 1 - Date 1

S121

HOHBACH-LEWIN #9547.2

PRINTED ON: 2/11/2016 4:15:07 PM FROM FILE: C:\Users\atlas\Documents\9547.2_RS2015_atlas.rvt

© 2014 PIVOT ARCHITECTURE

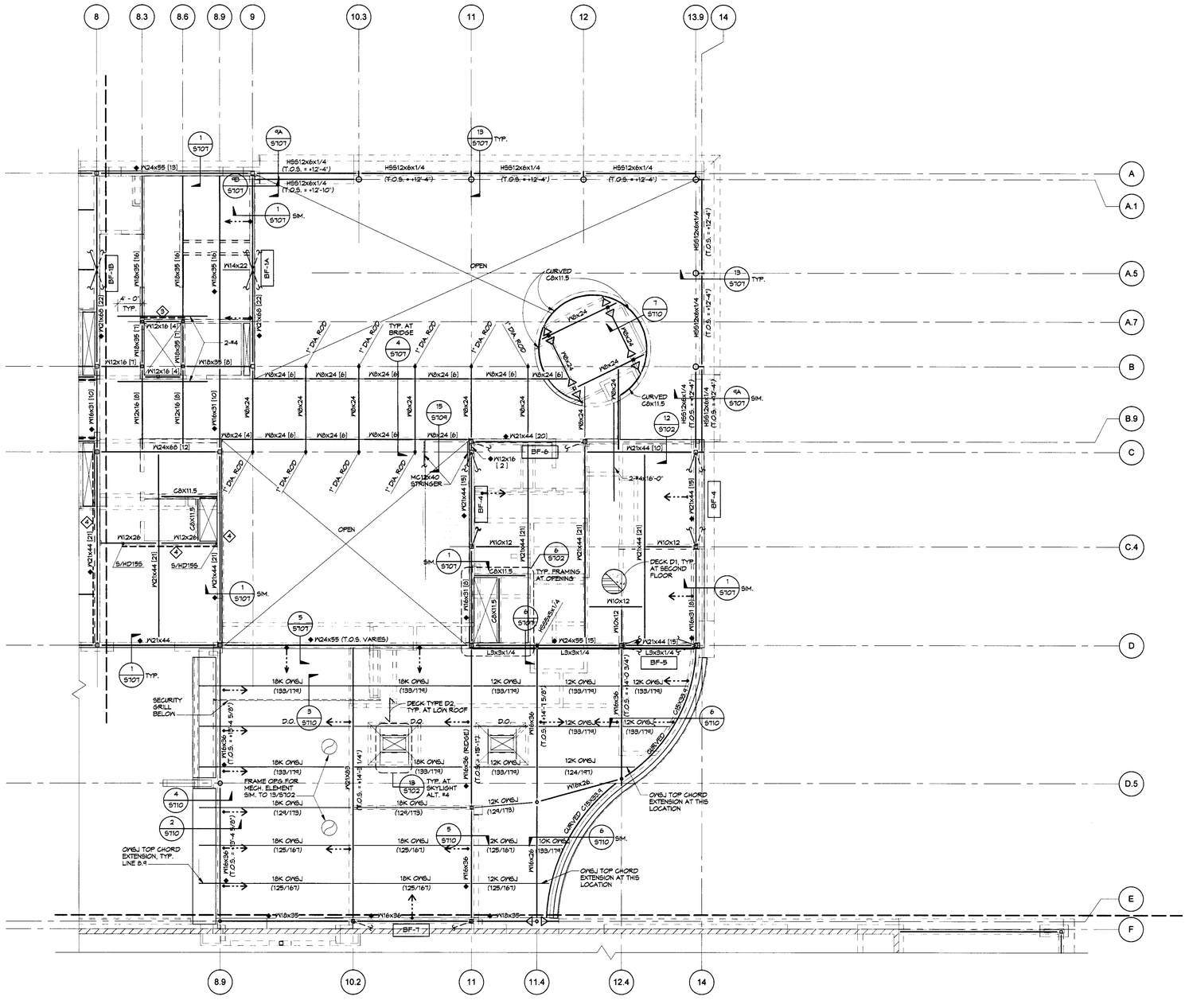

1 SECTOR B - SECOND FLOOR AND LOW ROOF FRAMING PLAN
1/8" = 1'-0"

SECOND FLOOR PLAN NOTES

1. SEE S001 FOR GENERAL STRUCTURAL NOTES AND SYMBOLS.
2. T.O. CONCRETE = 14'-0" U.O.N.
3. T.O. STEEL = BOTTOM OF METAL DECK ELEVATION = +13'-6" TYPICAL U.O.N. ON PLAN.
4. FLOOR BEAMS ARE EQUALLY SPACED BETWEEN GRIDS UNLESS OTHERWISE NOTED.
5. SEE ARCH DRAWINGS FOR ALL FLOOR OPENINGS, INCLUDING STAIRS AND ELEVATOR.
6. SEE DETAILS 1&2/S701 FOR TYPICAL WF BEAM TO WF BEAM CONNECTION.
7. SEE DETAIL 5&6/S701 FOR TYPICAL WF BEAM TO HSS COLUMN CONNECTION.
8. SEE 1/S702 FOR STEEL FLOOR DECK ATTACHMENT.
9. SEE SHEETS S701 AND S702 FOR TYPICAL STEEL DETAILS NOT NOTED.
10. PROVIDE 2-#4 CONT. CHORD BARS IN CONCRETE OVER METAL DECK AT PERIMETER, STAIR OPENINGS, RE-ENTRANT CORNERS, BALCONIES, ETC.

SECOND FLOOR PLAN SYMBOLS

- WALLS BELOW FLOOR
- WALLS ABOVE FLOOR
- 4 — FIRE-TREATED PLYWOOD SHEATHED LIGHT GAUGE METAL STUD SHEARWALL ABOVE THIS LEVEL, SEE SCHEDULE, DETAIL 1/S902
- DENOTES CONCRETE FILL O/ METAL DECK PER SCHEDULE, DETAIL 1/S702
- DENOTES BEAM BOTTOM FLANGE BRACING PER DETAIL 5/S702
- ◆ #X — DENOTES A MEMBER OF THE SEISMIC LOAD RESISTANCE SYSTEM. SEE DETAIL 2/S705 FOR REQUIREMENTS.
- [X] — DENOTES NUMBER OF SHEAR STUDS, SEE DETAIL 4/S702
- S/HDX — DENOTES HOLDOWN PER SCHEDULE, SEE DETAILS 4 & 13/S902
- DENOTES NON-SEISMIC MOMENT RESISTING CONNECTIONS

ROOF FRAMING NOTES

1. SEE SHEET S001 FOR GENERAL STRUCTURAL NOTES AND SYMBOLS.
2. SEE ARCHITECTURAL DRAWINGS FOR T.O. STEEL, ELEVATIONS NOT NOTED, ROOF SLOPES, ETC.
3. JOISTS ARE EQUALLY SPACED BETWEEN GRID LINES U.O.N.
4. SEE 1/S702 FOR ROOF DECK ATTACHMENT.
5. STEEL DETAILS 13&14/S702 FOR FRAMING AT DECK OPENINGS FOR SKYLIGHTS.
6. SEE DETAILS 1&2/S701 FOR TYPICAL WF BEAM TO WF BEAM CONNECTION.
7. SEE DETAIL 5/S701 FOR TYPICAL WF BEAM TO HSS COLUMN CONNECTION.
8. SEE SHEETS S701 AND S702 FOR TYPICAL STEEL DETAILS NOT NOTED.
9. ALL ROOF BEAMS REQUIRE BOTTOM FLANGE BRACING AT 12'-0" O.C., MAX; SEE DETAIL 5/S702.

ROOF FRAMING SYMBOLS

- DENOTES WALL BELOW ROOF
- DENOTES PARAPET WALL
- DX — DENOTES DIRECTION OF METAL ROOF DECK SPAN AND DECK TYPE, SEE 1/S702
- ◆ #X — DENOTES A MEMBER OF THE SEISMIC LOAD RESISTANCE SYSTEM. SEE DETAIL 2/S705 FOR REQUIREMENTS.
- DENOTES BEAM BOTTOM FLANGE BRACING PER DETAIL 5/S702
- 24KOWSJ — DENOTES OPEN WEB STEEL JOIST (24=DEPTH BY SJI); "K"="SERIES" AS DESIGNATED BY SJI. SEE 2/S706 FOR OWJ NOTES AND LOADING INFORMATION.
- (XX/XX) — DENOTES UNFACTORED UNIFORMLY DISTRIBUTED DEAD LOAD/SNOW LOAD IN POUNDS PER LINEAR FOOT (PLF)
- P_{AXIAL}=66K — DENOTES STRENGTH LEVEL OWJ DESIGN AXIAL FORCE (WIND/SEISMIC). SEE NOTE 9 IN DETAIL 2/S705 FOR TYPICAL OWJ AXIAL LOAD WHEN NOT NOTED ON PLAN.
- (T.O.S. = +X'-X") — DENOTES TOP OF STEEL/ BOTTOM OF ROOF

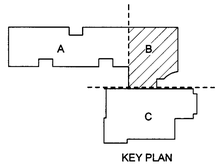

KEY PLAN

PIVOT ARCHITECTURE

STRUCTURAL REGISTERED PROFESSIONAL ENGINEER 65387PE OREGON JAN 23, 2001 VIVEK H. BOURSIER
Expires: 12/31/15

IBI GROUP

loura

HOHBACH-LEWIN, INC.
STRUCTURAL ENGINEERS
Corporate Office
Eugene, OR 97401
(541) 343-3251 Fax (541) 343-1700

BID DOCUMNET SET
EUGENE SCHOOL DISTRICT 4J
120 WEST HILLARD AVENUE, EUGENE OREGON 97404
RIVER ROAD / EL CAMINO DEL RIO ELEMENTARY SCHOOL

SECTOR B - SECOND FLOOR AND LOW ROOF FRAMING PLAN

PROJECT #	1337	REVISIONS:
ISSUE DATE:	10.22.2015	
DRAWN:	JPA	Revision 1 - Date 1
CHECKED:	VHB	

S122

HOHBACH-LEWIN #9547.2

PRINTED ON: 2/11/2016 8:08:13 PM FROM FILE: C:\Users\aias\Documents\9547.2_RS2015_aias.rvt

© 2014 PIVOT ARCHITECTURE

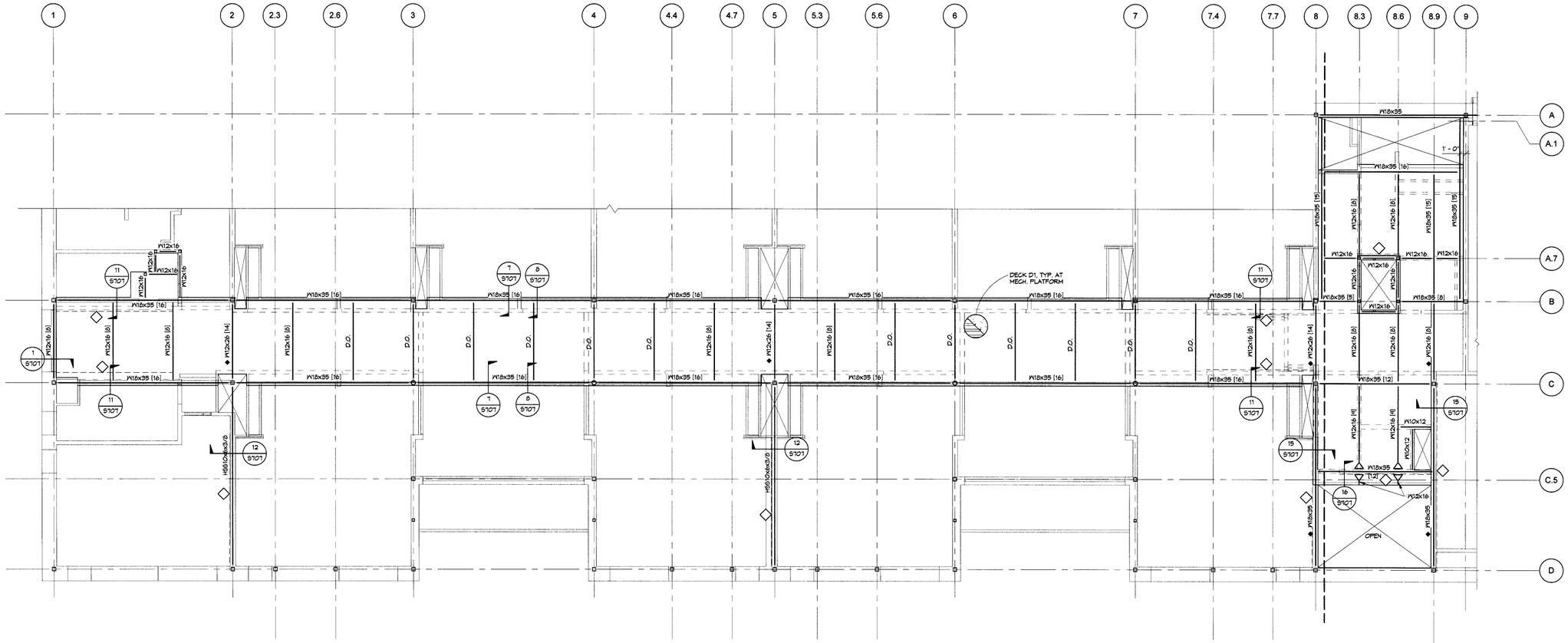

1 SECTOR A & B - MECHANICAL PLATFORM FRAMING PLANS

1/8" = 1'-0"

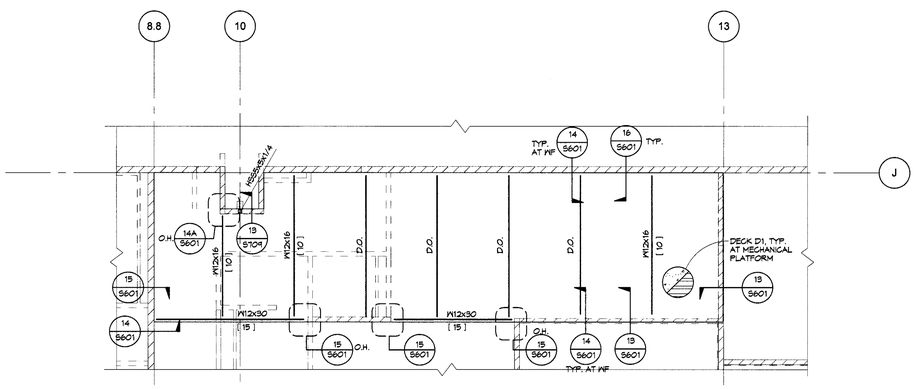

2 SECTOR C - MECHANICAL PLATFORM FRAMING PLAN

1/8" = 1'-0"

MECHANICAL PLATFORM NOTES

1. SEE S001 FOR GENERAL STRUCTURAL NOTES AND SYMBOLS.
2. T.O. CONCRETE = 26'-0" AT SECTOR A & B (1/S131).
   T.O. CONCRETE = 14'-0" AT SECTOR C (2/S131).
3. T.O. STEEL = BOTTOM OF METAL DECK ELEVATION = +25'-6" AT SECTOR A & B (1/S131). T.O. STEEL = BOTTOM OF METAL DECK ELEVATION = 13'-6" AT SECTOR C (2/S131).
4. FLOOR BEAMS ARE EQUALLY SPACED BETWEEN GRIDS UNLESS OTHERWISE NOTED.
5. SEE ARCH DRAWINGS FOR ALL FLOOR OPENINGS, INCLUDING STAIRS AND ELEVATOR.
6. SEE DETAILS 1&2/S101 FOR TYPICAL WF BEAM TO WF BEAM CONNECTION.
7. SEE DETAIL 5/S101 FOR TYPICAL WF BEAM TO HSS COLUMN CONNECTION.
8. SEE 1/S102 FOR STEEL FLOOR DECK ATTACHMENT.
9. SEE SHEETS S101 AND S102 FOR TYPICAL STEEL DETAILS NOT NOTED.

MECHANICAL PLATFORM SYMBOLS

- NON-STRUCTURAL WALLS BELOW FLOOR
- NON-STRUCTURAL WALLS ABOVE FLOOR
- 4 — FIRE-TREATED PLYWOOD SHEATHED LIGHT GAUGE METAL STUD SHEARWALL ABOVE AND BELOW THIS LEVEL. SEE SCHEDULE, DETAIL 1/S402
- FIRE-TREATED PLYWOOD SHEATHED LIGHT GAUGE METAL STUD SHEARWALL BELOW THIS LEVEL. SEE SCHEDULE, DETAIL 1/S402
- DENOTES BEAM BOTTOM FLANGE BRACING PER DETAIL 8/S102
- ◆ WX — DENOTES A MEMBER OF THE SEISMIC LOAD RESISTANCE SYSTEM. SEE DETAIL 2/S109 FOR REQUIREMENTS.
- DENOTES CONCRETE FILL O/ METAL DECK PER SCHEDULE, DETAIL 1/S102
- [X] — DENOTES NUMBER OF SHEAR STUDS, SEE DETAIL 9/S102
- DENOTES NON-SEISMIC MOMENT RESISTING CONNECTIONS

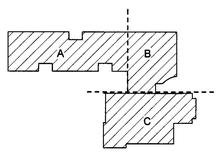

KEY PLAN

PIVOT ARCHITECTURE

STRUCTURAL ENGINEER
REGISTERED PROFESSIONAL ENGINEER
65387PE
OREGON
JAN 23, 2014
VIKRI H. BOURICIER
Expires: 12-31-15

IBI GROUP

HOHBACH-LEWIN, INC.
STRUCTURAL ENGINEERS
Suite 200
Eugene, OR 97401
(541) 345-1301 · Fax (541) 345 1227

BID DOCUMNET SET
EUGENE SCHOOL DISTRICT 4J
120 WEST HILLARD AVENUE, EUGENE OREGON 97404
RIVER ROAD / EL CAMINO DEL RIO ELEMENTARY SCHOOL

SECTOR A, B & C MECHANICAL PLATFORM FRAMING PLANS

PROJECT #:	13327	REVISIONS:	
ISSUE DATE:	10.22.2015		Revision 1 - Date 1
DRAWN:	AMA		
CHECKED:	VHB		

S131

HOHBACH-LEWIN #6547.2

PRINTED ON: 2/11/2016 4:33:33 PM FROM FILE: C:\Users\ama\Documents\6547.2_RS2015_atlas.rvt

© 2014 PIVOT ARCHITECTURE

ROOF FRAMING PLAN NOTES

1. SEE SHEET S001 FOR GENERAL STRUCTURAL NOTES AND SYMBOLS.
2. SEE ARCHITECTURAL DRAWINGS FOR T.O. STEEL, ELEVATIONS NOT NOTED, ROOF SLOPES, ETC.
3. JOISTS ARE EQUALLY SPACED BETWEEN GRID LINES U.O.N.
4. SEE 1/S702 FOR ROOF DECK ATTACHMENT.
5. STEEL DETAILS 13/14/S702 FOR FRAMING AT DECK OPENINGS FOR SKYLIGHTS.
6. SEE DETAILS 1/2/S701 FOR TYPICAL W/ BEAM TO W/ BEAM CONNECTION.
7. SEE DETAIL 5/S701 FOR TYPICAL W/ BEAM TO HSS COLUMN CONNECTION.
8. SEE SHEETS S701 AND S702 FOR TYPICAL STEEL DETAILS NOT NOTED.

ROOF FRAMING PLAN SYMBOLS

- DENOTES WALL BELOW ROOF
- DX — DENOTES DIRECTION OF METAL ROOF DECK SPAN AND DECK TYPE. SEE 1/S702
- ◆ W/X — DENOTES A MEMBER OF THE SEISMIC LOAD RESISTANCE SYSTEM. SEE DETAIL 2/S703 FOR REQUIREMENTS.
- 24K09GJ — DENOTES OPEN WEB STEEL JOIST (24-DEPTH BY SJI), "K"-SERIES" AS DESIGNATED BY SJI. SEE 2/S706 FOR OWJ NOTES AND LOADING INFORMATION.
- (XX/XX) — DENOTES UNFACTORED UNIFORMLY DISTRIBUTED DEAD LOAD/LIVE LOAD IN POUNDS PER LINEAR FOOT (PLF)
- FIRE-TREATED PLYWOOD SHEATHED LIGHT GAUGE METAL STUD SHEARWALL BELOW THIS LEVEL. SEE SCHEDULE, DETAIL 1/S402
- DENOTES BEAM BOTTOM FLANGE BRACING PER DETAIL 8/S702
- DENOTES STEP IN ROOF

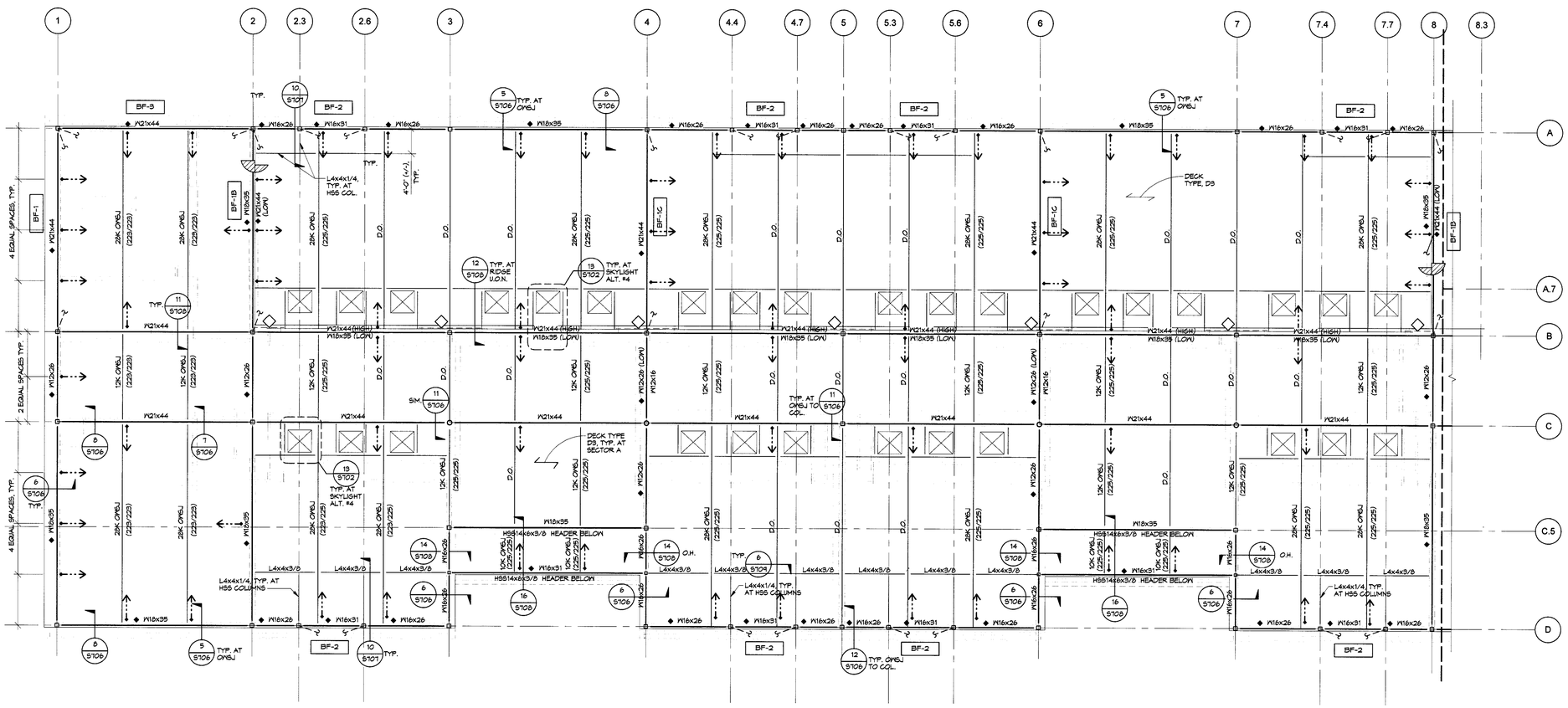

1 SECTOR A - ROOF FRAMING PLAN
1/8" = 1'-0"

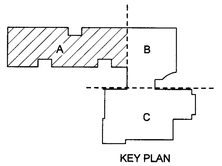

KEY PLAN

PIVOT ARCHITECTURE

REGISTERED PROFESSIONAL ENGINEER STRUCTURAL 65387PE OREGON 10-22-2015 VIKKI H. BOUCHER
Expires: 12-31-15

IBI GROUP

HOHBACH-LEWIN, INC. STRUCTURAL ENGINEERS
Eugene, OR 97401
(541) 343-7001 Fax (541) 343-1702 Suite 302

BID DOCUMNET SET
EUGENE SCHOOL DISTRICT 4J
120 WEST HILLARD AVENUE, EUGENE OREGON 97404
RIVER ROAD / EL CAMINO DEL RIO ELEMENTARY SCHOOL

SECTOR A - ROOF FRAMING PLAN

REVISIONS	
1337	
10.22.2015	Revision 1 - Date 1
AMA	
VHB	

PROJECT #
ISSUE DATE:
DRAWN
CHECKED

S141

HOHBACH-LEWIN #9547.2

PRINTED ON: 2/11/2016 4:33:35 PM FROM FILE: C:\Users\amas\Documents\9547.2_RS2015_atlas.rvt

© 2014 PIVOT ARCHITECTURE

ROOF FRAMING NOTES

1. SEE SHEET S001 FOR GENERAL STRUCTURAL NOTES AND SYMBOLS.
2. SEE ARCHITECTURAL DRAWINGS FOR T.O. STEEL, ELEVATIONS NOT NOTED, ROOF SLOPES, ETC.
3. JOISTS ARE EQUALLY SPACED BETWEEN GRID LINES U.O.N.
4. SEE 1/S102 FOR ROOF DECK ATTACHMENT.
5. STEEL DETAILS 13414/S102 FOR FRAMING AT DECK OPENINGS FOR SKYLIGHTS.
6. SEE DETAILS 1&2/S101 FOR TYPICAL WF BEAM TO WF BEAM CONNECTION.
7. SEE DETAIL 5/S101 FOR TYPICAL WF BEAM TO HSS COLUMN CONNECTION.
8. SEE SHEETS S101 AND S102 FOR TYPICAL STEEL DETAILS NOT NOTED.
9. ALL ROOF BEAMS REQUIRE BOTTOM FLANGE BRACING AT 12'-0" O.C., MAX; SEE DETAIL 8/S102.

ROOF FRAMING SYMBOLS

	DENOTES WALL BELOW ROOF
	FIRE-TREATED PLYWOOD SHEATHED LIGHT GAUGE METAL STUD SHEARWALL BELOW THIS LEVEL, SEE SCHEDULE, DETAIL 1/S402
DX	DENOTES DIRECTION OF METAL ROOF DECK SPAN AND DECK TYPE, SEE 1/S102
◆ PX	DENOTES A MEMBER OF THE SEISMIC LOAD RESISTANCE SYSTEM. SEE DETAIL 2/S105 FOR REQUIREMENTS.
24KOWSJ	DENOTES OPEN WEB STEEL JOIST (24=DEPTH BY S.J.); "K" OR "LH" = "SERIES" AS DESIGNATED BY S.J. SEE 2/S106 FOR OWJ NOTES AND LOADING INFORMATION. SEE 3/S106 FOR TRUSS PROFILE AT MEDIA CENTER.
(XX/XX)	DENOTES UNFACTORED UNIFORMLY DISTRIBUTED DEAD LOAD/SNOW LOAD IN POUNDS PER LINEAR FOOT (PLF)
(C=X')	DENOTES STEEL BEAM CAMBER
P_D=7.4k P_L=7.4k	DENOTES VERTICAL POINT LOADS HUNG FROM BOTTOM CHORD OF TRUSS, SEE 3/S105
P_{AXIAL}=66k	DENOTES STRENGTH LEVEL OWJ DESIGN AXIAL FORCE (WIND/SEISMIC). SEE NOTE 4 IN DETAIL 2/S105 FOR TYPICAL OWJ AXIAL LOAD WHEN NOT NOTED ON PLAN.
	DENOTES BEAM BOTTOM FLANGE BRACING PER DETAIL 8/S102
(A)	DENOTES LOCATION WHERE OWSJ TO BEARING SEAT/ WF BEAM REQUIRES 1/4x4" LONG FILLET WELD. SEE DETAIL 1/S106.

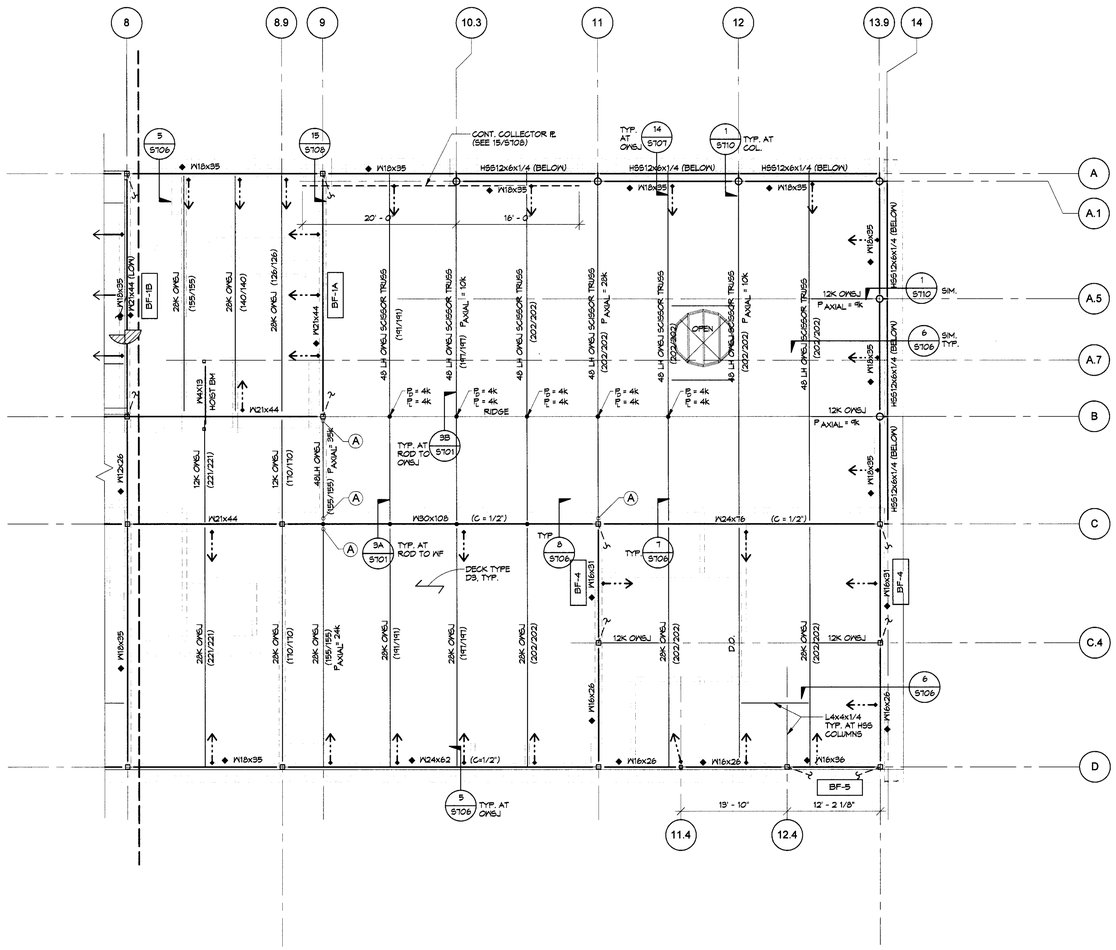

1 SECTOR B - ROOF FRAMING PLAN
1/8" = 1'-0"

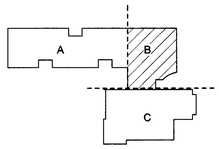

KEY PLAN

PIVOT ARCHITECTURE

STRUCTURAL REGISTERED PROFESSIONAL ENGINEER 65387PE OREGON JUN 23, 2010 VIKRI H. BOURNOS Expires: 12-31-15

IBI GROUP

HOHBACH-LEWIN, INC. STRUCTURAL ENGINEERS 296 East 5th Ave. Eugene, OR 97401 (541) 349-1701 Fax (541) 349-1702 Suite 300

BID DOCUMNET SET

4J EUGENE SCHOOL DISTRICT 4J
FORREST TULLARD AVENUE, EUGENE OREGON 97404

RIVER ROAD / EL CAMINO DEL RIO ELEMENTARY SCHOOL

SECTOR B - ROOF FRAMING PLAN

PROJECT #:	1337
ISSUE DATE:	10.22.2015
DRAWN:	AMA
CHECKED:	VHB
REVISIONS:	

S142

HOHBACH-LEWIN #9547.2

PRINTED ON: 2/11/2016 3:41:29 PM FROM FILE: C:\Users\atas\Documents\9547.2_RS2015_arch.rvt

© 2014 PIVOT ARCHITECTURE

ROOF FRAMING PLAN NOTES

1. SEE SHEET S001 FOR GENERAL STRUCTURAL NOTES AND SYMBOLS.
2. SEE ARCHITECTURAL DRAWINGS FOR T.O. STEEL, ELEVATIONS NOT NOTED, ROOF SLOPES, ETC.
3. JOISTS ARE EQUALLY SPACED BETWEEN GRID LINES U.O.N.
4. SEE 1/S702 FOR ROOF DECK ATTACHMENT.
5. STEEL DETAILS 13414/S702 FOR FRAMING AT DECK OPENINGS FOR SKYLIGHTS.

ROOF FRAMING PLAN SYMBOLS

	DENOTES NON-STRUCTURAL WALL BELOW ROOF
	DENOTES CMU WALL BELOW ROOF
DX	DENOTES DIRECTION OF METAL ROOF DECK SPAN AND DECK TYPE, SEE 1/S702
24K OWSJ	DENOTES OPEN WEB STEEL JOIST (24=DEPTH BY SJI); "L" OR "DHL" = "SERIES" AS DESIGNATED BY SJI. SEE 2/S706 FOR OWJ NOTES AND LOADING INFORMATION. SEE 4/S706 FOR SCISSOR TRUSS PROFILE AT GYM/CAFETERIA
(XX/XX)	DENOTES UNFACTORED UNIFORMLY DISTRIBUTED DEAD LOAD/SNOW LOAD IN POUNDS PER LINEAR FOOT (PLF)
P_{AXIAL} =66k	DENOTES STRENGTH LEVEL OWJ DESIGN AXIAL FORCE (WIND/SEISMIC). SEE NOTE 9 IN DETAIL 2/S706 FOR TYPICAL OWJ AXIAL LOAD WHEN NOT NOTED ON PLAN.
—·—·—	DENOTES OWSJ COLLECTOR SPLICE TE., SEE 4/S704.

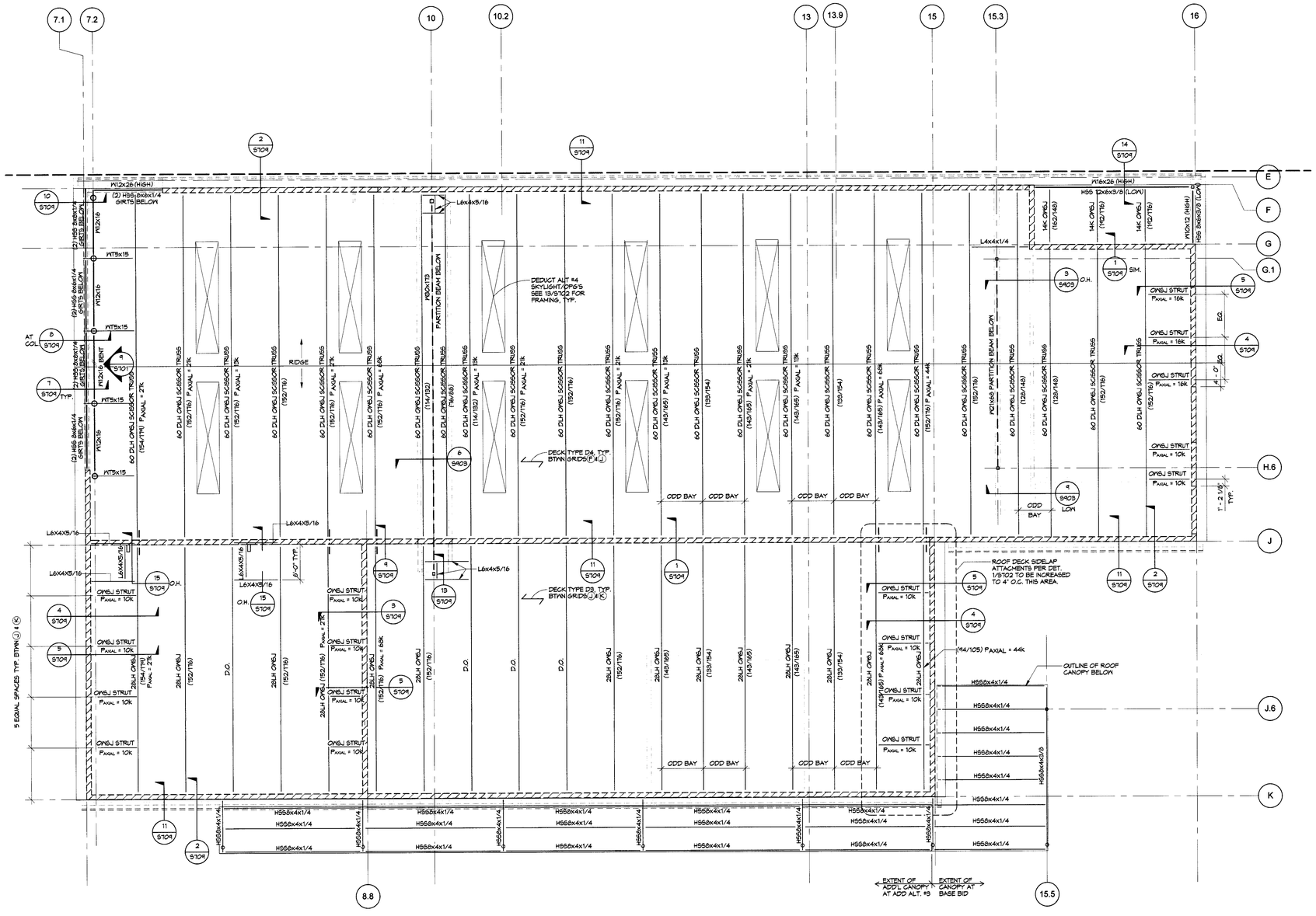

1 SECTOR C - ROOF FRAMING PLAN
1/8" = 1'-0"

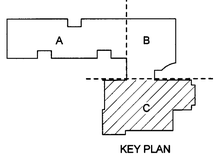

KEY PLAN

PIVOT ARCHITECTURE

STRUCTURAL REGISTERED PROFESSIONAL ENGINEER 65387PE OREGON JAN 23, 2001 VIKKI M. BOURCIER
Expires: 12-31-15

IBI GROUP

HOHBACH-LEWIN, INC. STRUCTURAL ENGINEERS 2405 Kelly Avenue, Suite 100 Eugene, OR 97401 (541) 343-1201 / Fax (541) 343-1202

BID DOCUMNET SET
EUGENE SCHOOL DISTRICT 4J
120 WEST HILLARD AVENUE, EUGENE OREGON 97404
RIVER ROAD / EL CAMINO DEL RIO ELEMENTARY SCHOOL

SECTOR C - ROOF FRAMING PLAN

PROJECT #	1337
REVISIONS:	
ISSUE DATE:	10.22.2015
DRAWN:	AMA
CHECKED:	VMB
Revision 1 - Date 1	

S143

HOHBACH-LEWIN #99472

PRINTED ON: 2/11/2016 4:35:11 PM FROM FILE: C:\Users\arlas\Documents\99472_RS2015_arlas.rvt

© 2014 PIVOT ARCHITECTURE

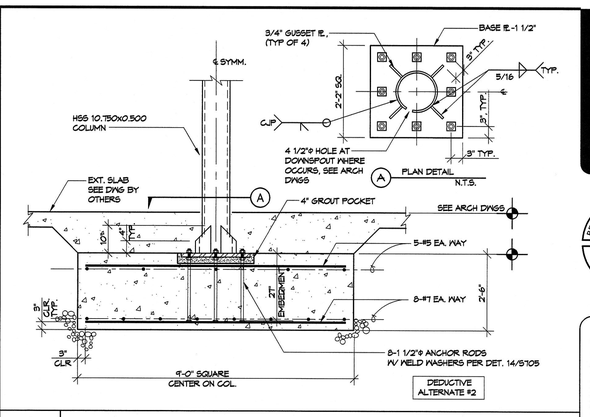

1 COLUMN PAD FOOTING AT COVERED PLAY STRUCTURE
1/2"=1'-0"

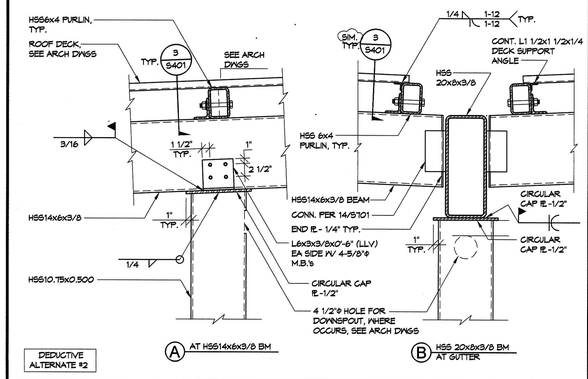

2 HSS BEAM TO COLUMN - COVERED PLAY STRUCTURE
1"=1'-0"

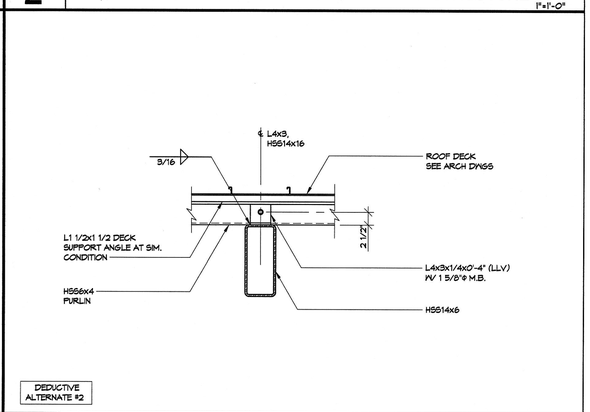

3 HSS PURLIN TO HSS BEAM - COVERED PLAY STRUCTURE
1"=1'-0"

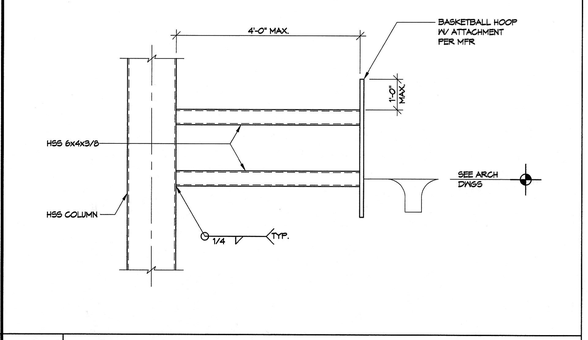

4 BASKETBALL HOOP SUPPORT DETAIL
1"=1'-0"

13 | 9 | 5 | 1

14 | 10 | 6 | 2

15 | 11 | 7 | 3

16 | 12 | 8 | 4

1"=1'-0"

PIVOT ARCHITECTURE

STRUCTURAL REGISTERED PROFESSIONAL ENGINEER 65387PE OREGON JAN 23, 2007 VIKKI N. BOURCIER Expires: 12-31-17

IBI GROUP

HONBACH-LEWIN, INC. STRUCTURAL ENGINEERS 398 East 8th Avenue, Suite 302 Eugene, OR 97401 (541) 349-1101 Fax (541) 349-1702

BID DOCUMENT SET

EUGENE SCHOOL DISTRICT 4J
120 WEST HILLIARD AVENUE, EUGENE OREGON 97404

RIVER ROAD / EL CAMINO DEL RIO ELEMENTARY SCHOOL

SITE STRUCTURE DETAILS

PROJECT #:	1337
ISSUE DATE:	02.12.2016
DRAWN:	AMA
CHECKED:	VNB

REVISIONS:

S401

H-L #9547.2

© 2014 PIVOT ARCHITECTURE

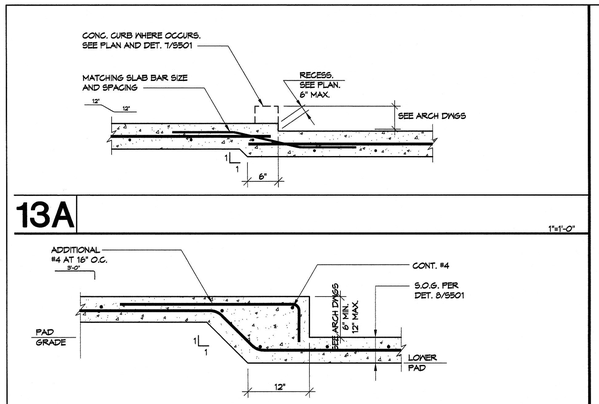

13A

1"=1'-0"

13B TYPICAL SLAB-ON-GRADE STEP

1"=1'-0"

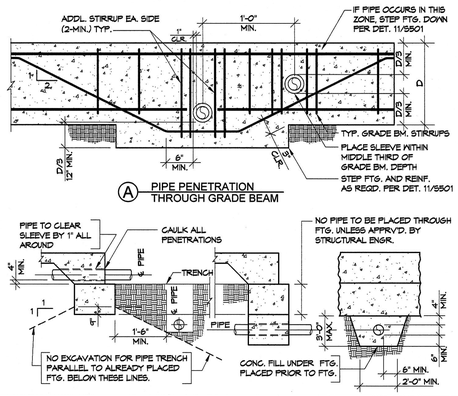

Ⓐ PIPE PENETRATION THROUGH GRADE BEAM

9 TYPICAL PIPE PENETRATION UNDER FOOTING AND TRENCH LIMITATIONS

N.T.S.

NOTES:

1. AT CONTRACTOR'S OPTION USE EITHER SAWCUT OR PLASTIC STRIP CONTROL JOINTS.
2. AT CONTRACTOR'S OPTION USE EITHER SAWCUT OR PLASTIC STRIP CONTROL JOINTS.

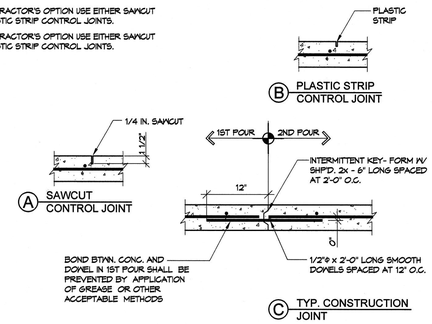

Ⓐ SAWCUT CONTROL JOINT

Ⓑ PLASTIC STRIP CONTROL JOINT

Ⓒ TYP. CONSTRUCTION JOINT

5 TYPICAL CONSTRUCTION AND CONTROL JOINTS AT SLAB-ON-GRADE

1"=1'-0"

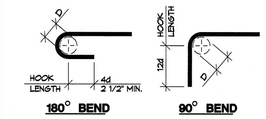

180° BEND

90° BEND

NOTE:

d = BAR DIAMETER
D = MINIMUM DIAMETER OF BEND
D = 6d FOR #3 THROUGH #8
D = 8d FOR #9 THROUGH #11

BAR SIZE	D (IN.)	STANDARD HOOK HOOK LENGTH (IN.)	
		90°	180°
#3	2 1/4	4 1/2	2 1/2
#4	3	6	2 1/2
#5	3 3/4	7 1/2	2 1/2
#6	4 1/2	9	3
#7	5 1/4	10 1/2	3 1/2
#8	6	12	4
#9	9	13 1/2	4 1/2

1A STANDARD REINFORCING STEEL HOOKS

N.T.S.

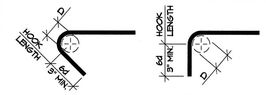

NOTE: 135° BEND

d = BAR DIAMETER
D = MINIMUM DIAMETER OF BEND
D = 4d FOR #5 AND SMALLER

90° BEND

BAR SIZE	D (IN.)	STIRUP & TIE HOOK HOOK LENGTH (IN.)	
		90°	135°
#3	1 1/2	3	3
#4	2	3	3
#5	2 1/2	4	4

1 TYPICAL STIRRUP AND TIE HOOKS

N.T.S.

NOTE:

1. GC TO COORDINATE BLOCKOUT W/ ARCH FINISH

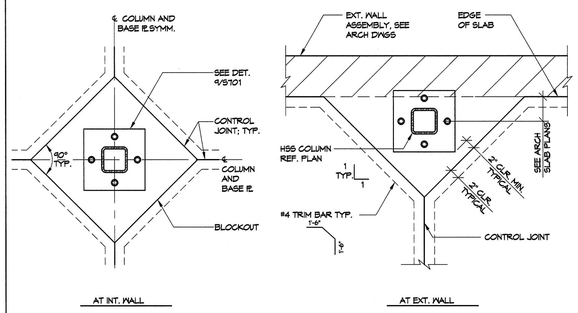

AT INT. WALL

AT EXT. WALL

14 TYPICAL COLUMN BLOCKOUT

1"=1'-0"

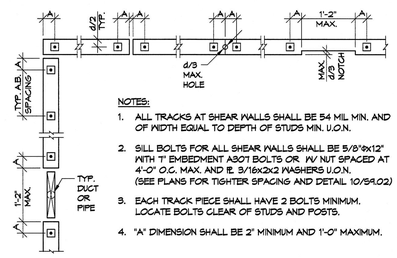

NOTES:

1. ALL TRACKS AT SHEAR WALLS SHALL BE 54 MIL MIN. AND OF WIDTH EQUAL TO DEPTH OF STUDS MIN. U.O.N.
2. SILL BOLTS FOR ALL SHEAR WALLS SHALL BE 5/8"ø x 12" WITH 7" EMBEDMENT A307 BOLTS OR W/ NUT SPACED AT 4'-0" O.C. MAX. AND ℄. 3/16x2x2 WASHERS U.O.N. (SEE PLANS FOR TIGHTER SPACING AND DETAIL 10/S9.02)
3. EACH TRACK PIECE SHALL HAVE 2 BOLTS MINIMUM. LOCATE BOLTS CLEAR OF STUDS AND POSTS.
4. "A" DIMENSION SHALL BE 2" MINIMUM AND 1'-0" MAXIMUM.

10 ANCHOR BOLT AND TRACK REQUIREMENTS

N.T.S.

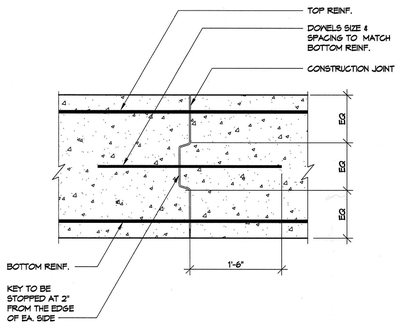

6 TYPICAL CONSTRUCTION JOINT AT FOUNDATION

1"=1'-0"

TOP BARS - 90° HOOK EMBEDMENT AND CLASS B TENSION LAP SPLICE FOR GRADE 60 REINF.

f'c	2,500 PSI		3,000 PSI		4,000 PSI		5,000 PSI	
BAR SIZE	EMBED. (IN)	CLASS B (IN)	EMBED. (IN)	CLASS B (IN)	EMBED. (IN)	CLASS B (IN)	EMBED. (IN)	CLASS B (IN)
#3	9	31	9	28	8	25	7	22
#4	12	41	11	38	10	33	9	29
#5	15	51	14	47	12	41	11	36
#6	18	61	17	56	15	49	13	44
#7	21	84	20	81	17	71	15	63
#8	24	102	22	93	19	81	17	72
#9	27	115	25	105	22	91	20	81

OTHER BARS - 90 ° HOOK EMBEDMENT AND CLASS B TENSION LAP SPLICE FOR GRADE 60 REINF.

f'c	2,500 PSI		3,000 PSI		4,000 PSI		5,000 PSI	
BAR SIZE	EMBED. (IN)	CLASS B (IN)	EMBED. (IN)	CLASS B (IN)	EMBED. (IN)	CLASS B (IN)	EMBED. (IN)	CLASS B (IN)
#3	9	24	9	22	8	19	7	17
#4	12	32	11	29	10	25	9	23
#5	15	39	14	36	12	31	11	28
#6	18	47	17	43	15	37	13	34
#7	21	64	20	63	17	54	15	49
#8	24	73	22	72	19	62	17	56
#9	27	83	25	81	22	70	20	63

NOTES:

1. TOP BARS = HORIZONTAL BARS (OTHER THAN IN WALLS) PLACED WITH MORE THAN 12" OF FRESH CONCRETE IS CAST BELOW THEM. SEE DET. 3/S501
2. ABOVE TABLES ARE BASED UPON MINIMUM CLEAR COVER GREATER THAN 1.0db AND MINIMUM CLEAR SPACING GREATER THAN 2db. WHERE EITHER OF THESE REQUIREMENTS IS NOT MET, INCREASE THE EMBEDMENT OR LAP LENGTH BY 50%.
3. USE CLASS B LAP SPLICE FOR ALL BAR SPLICES TYP.
4. FOR ADDITIONAL INFORMATION SEE DET. 3/S501

2 TYPICAL REINFORCEMENT EMBED AND LAP SPLICE

N.T.S.

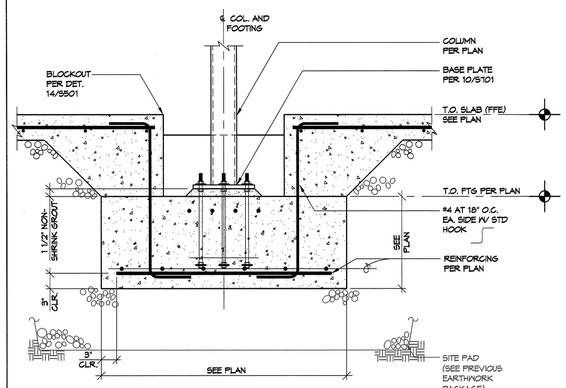

15 TYPICAL INTERIOR ISOLATED SPREAD FOOTING

1"=1'-0"

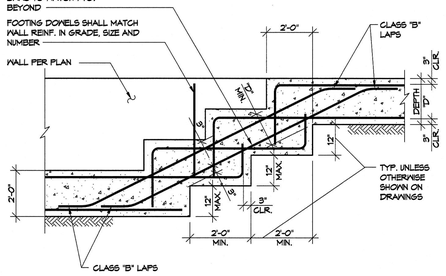

11 TYPICAL STEP IN CONTINUOUS FOOTING

N.T.S.

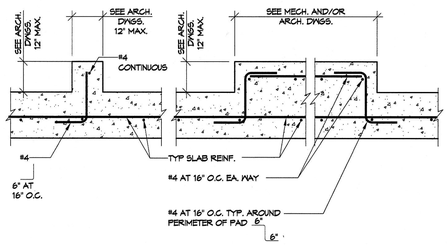

7 TYPICAL CURB AND RAISED PAD DETAILS

N.T.S.

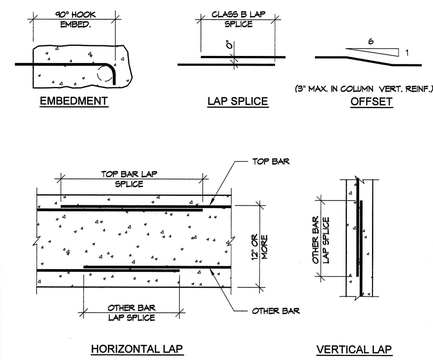

3 TYPICAL REINFORCEMENT EMBED, LAP SPLICE AND OFFSET

1"=1'-0"

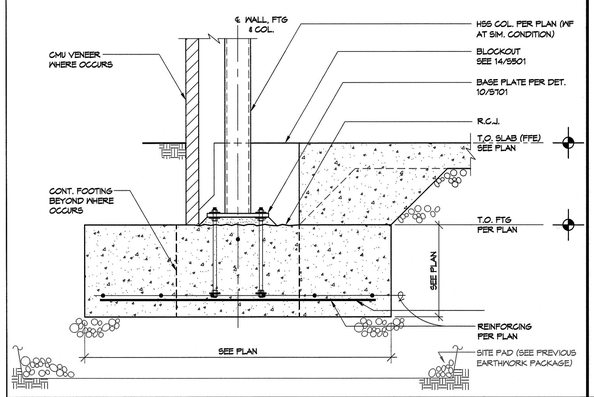

16 COLUMN FOOTING AT EXTERIOR WALL

1"=1'-0"

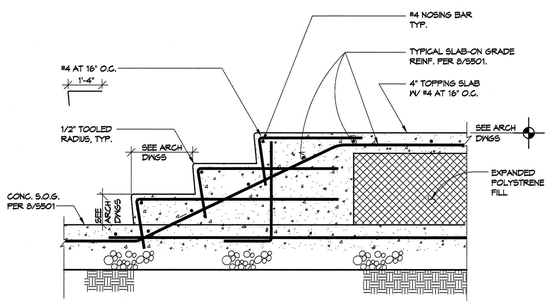

12 CONCRETE STEPS AT MEDIA CENTER

1"=1'-0"

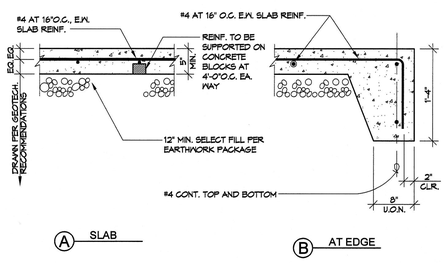

Ⓐ SLAB

Ⓑ AT EDGE

8 SLAB-ON-GRADE

1"=1'-0"

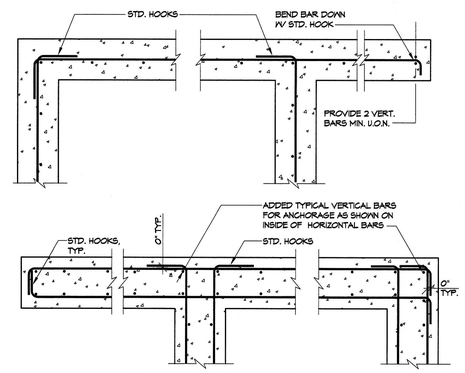

4 TYPICAL CONCRETE MEMBER INTERSECTIONS

1"=1'-0"

PIVOT ARCHITECTURE

STRUCTURAL REGISTERED PROFESSIONAL ENGINEER 55387PE OREGON JAN 29, 2001 VIKKI H. BOURCIER Expires: 12-31-17

IBI GROUP

Iowa

HOHBACH-LEWIN, INC. STRUCTURAL ENGINEERS
298 East 5th Ave. Eugene, OR 97401
(541) 345-1701 | Fax (541) 345-1702
Suite 502

BID DOCUMENT SET

EUGENE SCHOOL DISTRICT 4J
1200 WEST HILLARD AVENUE, EUGENE OREGON 97404

RIVER ROAD / EL CAMINO DEL RIO ELEMENTARY SCHOOL

TYPICAL CONCRETE DETAILS

PROJECT #:	1337
ISSUE DATE:	02.12.2016
DRAWN:	AMA
CHECKED:	VHB
REVISIONS:	

S501

H-L #95417.2

© 2014 PIVOT ARCHITECTURE

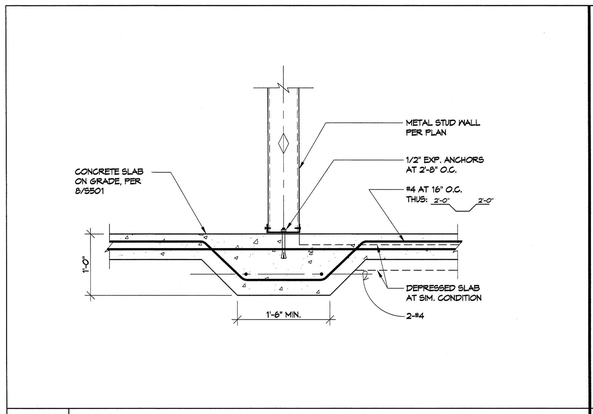

13 THICKENED SLAB AT PLATFORM CRIPPLE WALL
1"=1'-0"

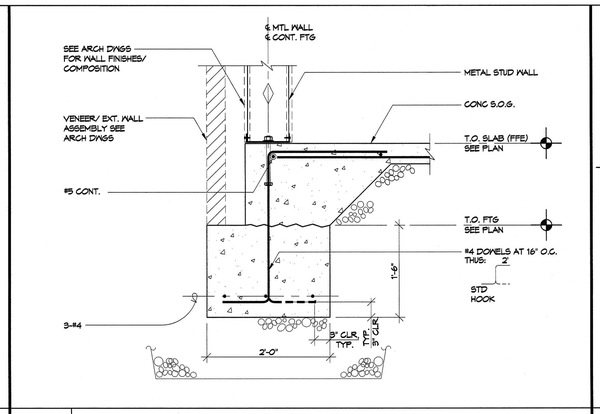

9 CONT FOOTING AT EXT. MTL STUD WALL
1"=1'-0"

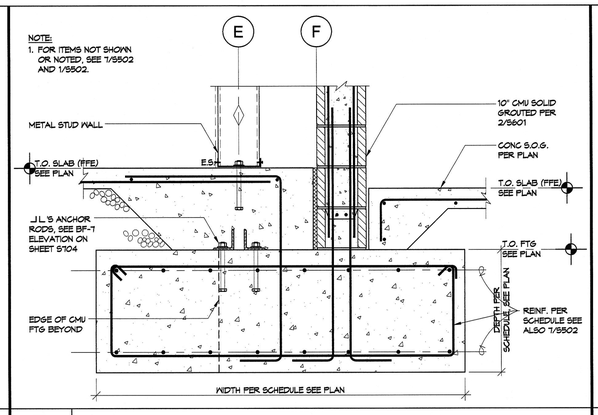

5 BF-7/ CMU WALL FOOTING AT GYM/ LOBBY
1"=1'-0"

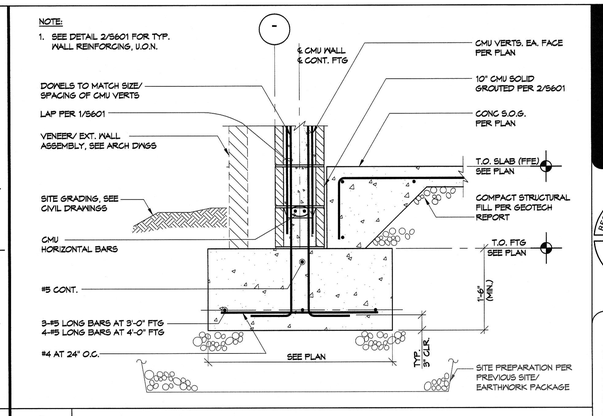

1 CONT FOOTING AT CMU WALLS
1"=1'-0"

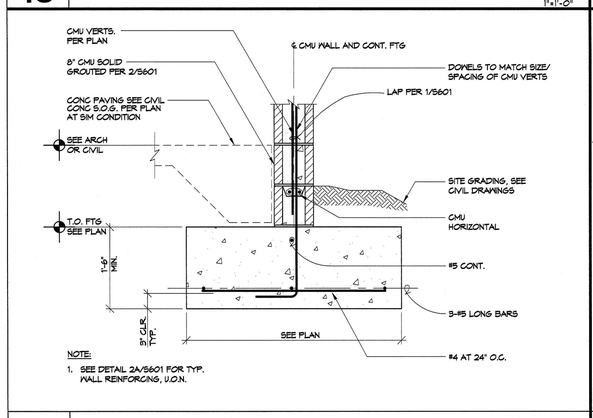

14 CONT FOOTING AT CMU SITE WALLS
1"=1'-0"

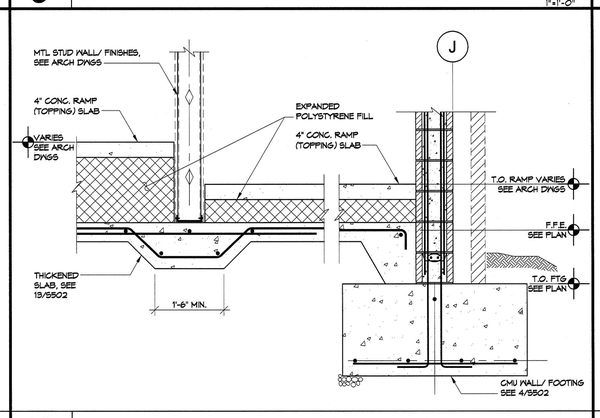

10 SECTION THRU PLATFORM RAMPS
3/4"=1'-0"

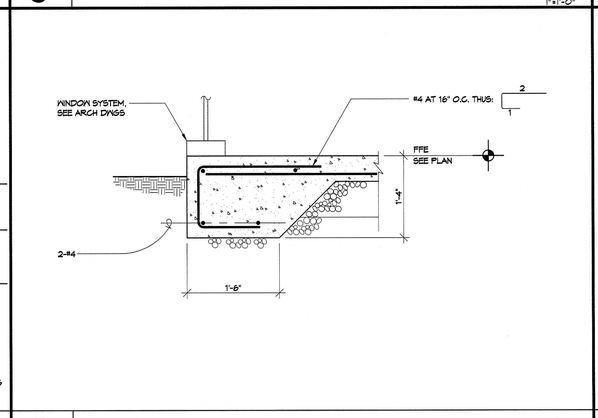

6 THICKENED SLAB EDGE AT WINDOW WALL
1"=1'-0"

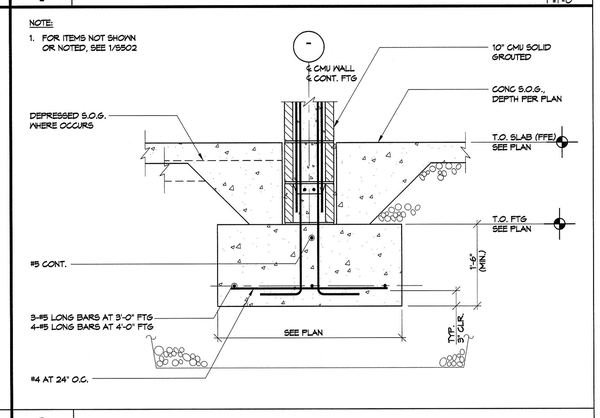

2 CONT FTG AT INTERIOR CMU WALLS
1"=1'-0"

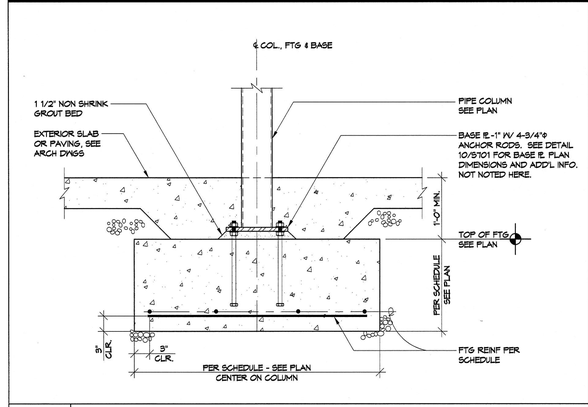

15 PIPE COLUMN FOOTING AT UTILITY COURT/ SOUTH CANOPY
1"=1'-0"

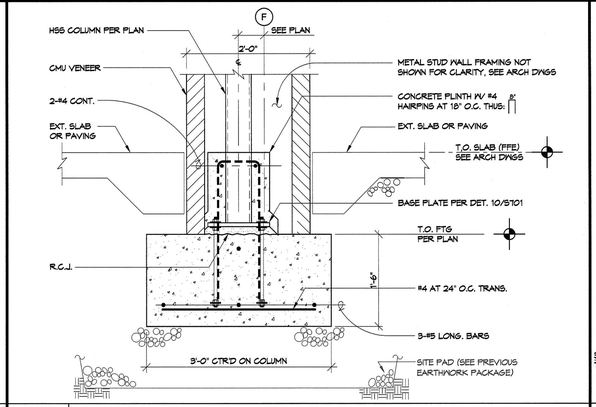

11 COL FOOTING AT NORTH EAST CORNER - SECTOR C
1"=1'-0"

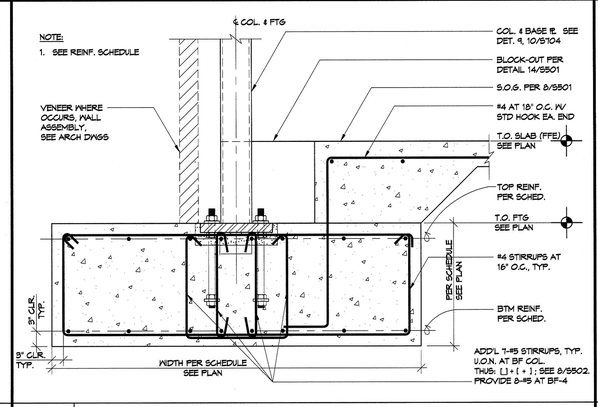

7 TYPICAL BRACED FRAME FOOTING
1"=1'-0"

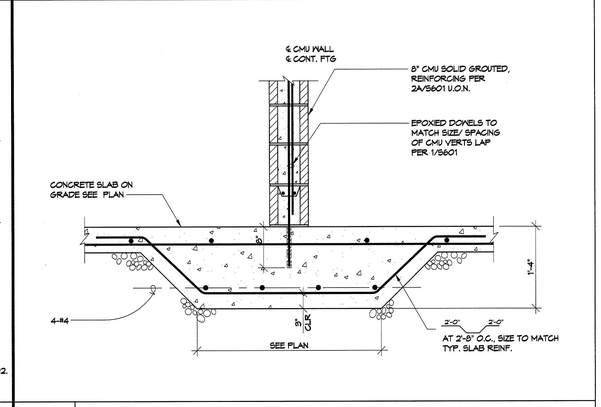

3 SECTION AT INTERIOR 8" CMU WALL
1"=1'-0"

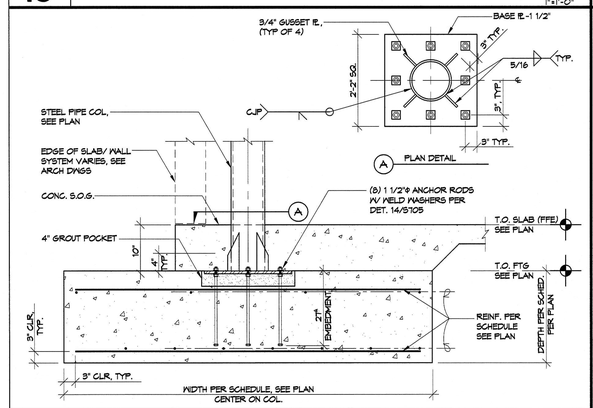

16 PAD FOOTING AT SELECT PIPE COLUMNS
3/4"=1'-0"

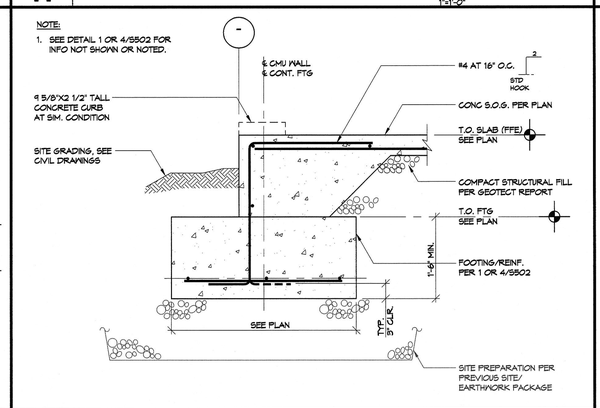

12 CONT FOOTING THRESHOLD - SECTOR C
1"=1'-0"

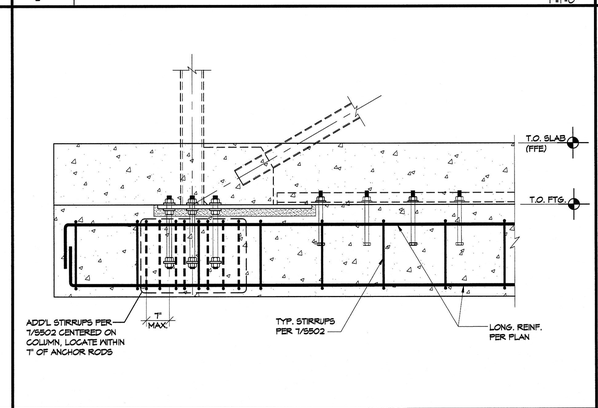

8 BRACED FAME FOOTING STIRRUPS
3/4"=1'-0"

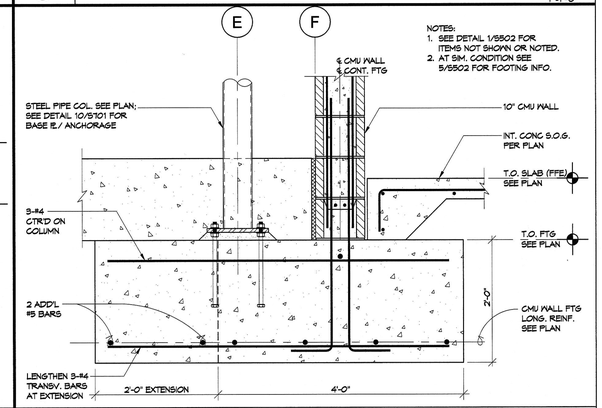

4 FOOTING AT NORTH WALL OF GYM AT ADMIN CANOPY COL
1"=1'-0"

PIVOT ARCHITECTURE

STRUCTURAL REGISTERED PROFESSIONAL ENGINEER 65387PE OREGON JAN 23, 2017 VIKKI H. BOURGER Expires: 12-31-17

IBI GROUP

HOHBACH-LEWIN, INC. STRUCTURAL ENGINEERS 296 East 5th Ave. Eugene, OR 97401 (541) 345-1021 Fax (541) 345-1702 Suite 302

BID DOCUMENT SET

EUGENE SCHOOL DISTRICT 4J
120 WEST HILLARD AVENUE, EUGENE OREGON 97404

RIVER ROAD / EL CAMINO DEL RIO ELEMENTARY SCHOOL

CONCRETE DETAILS

PROJECT #:	1337
ISSUE DATE:	02.17.2016
DRAWN:	AWL
CHECKED:	VHB
REVISIONS:	

S502

H-L #0547.2

© 2014 PIVOT ARCHITECTURE

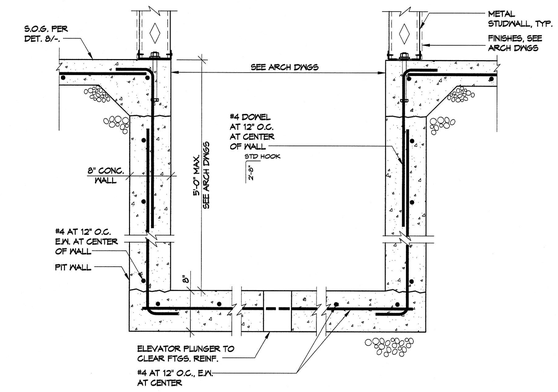

1 FOUNDATION AT ELEVATOR PIT

1"=1'-0"

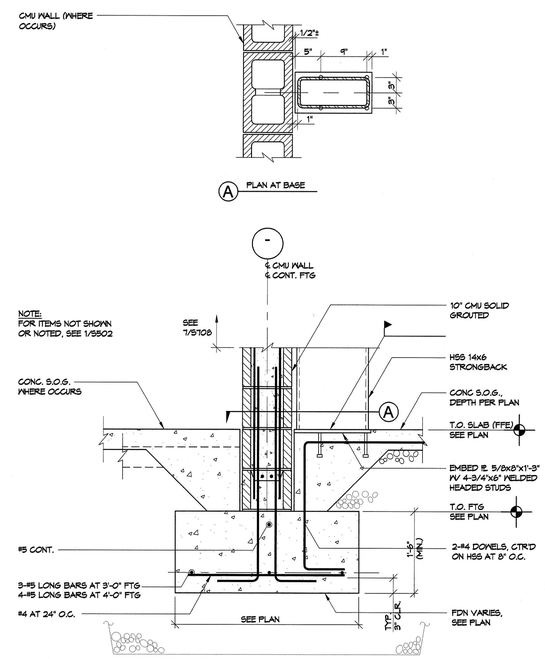

4 HSS STRONGBACK BASE CONNECTION

1"=1'-0"

PIVOT ARCHITECTURE

STRUCTURAL REGISTERED PROFESSIONAL ENGINEER 65387PE OREGON JAN 29, 2021 VIKKI H. BOURCIER Expires: 12-31-17

IBI GROUP

HOHBACH-LEWIN, INC. STRUCTURAL ENGINEERS
258 East 5th Ave
Eugene, OR 97401
(541) 345-1701 Fax (541) 345-1702
Suite 302

BID DOCUMENT SET

EUGENE SCHOOL DISTRICT 4J
120 WEST HILLARD AVENUE, EUGENE OREGON 97404

RIVER ROAD / EL CAMINO DEL RIO ELEMENTARY SCHOOL

CONCRETE DETAILS

PROJECT #:	1337
ISSUE DATE:	02.12.2016
DRAWN:	AMA
CHECKED:	VHB

REVISIONS:

S503

H-L #9547.2

© 2014 PIVOT ARCHITECTURE

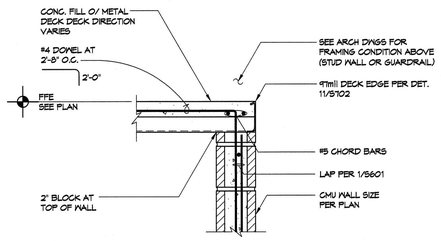

13 TYPICAL FLOOR DECK OVER CMU WALL

1"=1'-0"

9

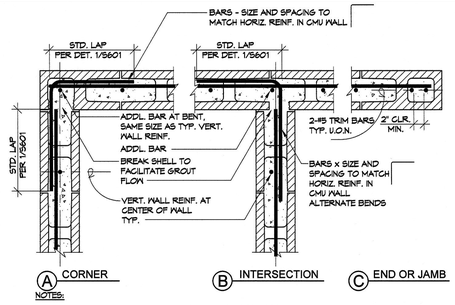

NOTES:

1. FOR REINF. REQUIREMENTS AT OPENINGS, ETC, SEE DET 11/S601
2. USE DOUBLE OPEN END BLOCKS TYP. USE SINGLE OPEN END BLOCKS AT CORNERS, WALL ENDS, JAMBS OR AT SPLIT FACE CMU.
3. PROVIDE VERTICAL DOWELS INTO CONCRETE STEM WALLS OR FOOTINGS. DOWELS SIZE AND SPACING TO MATCH VERTICAL REINF. IN CMU WALL.

5 PLAN - TYPICAL CMU WALL WITH SINGLE CURTAIN REINFORCING

N.T.S.

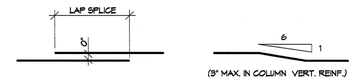

BAR SIZE	MINIMUM LAP SPLICE	
	MIN. 2" COVER AND CLEAR SPACING	MIN. 3 1/2" COVER AND CLEAR SPACING
#3	15"	15"
#4	25"	20"
#5	34"	25"
#6	54"	42"
#7	63"	57"
#8	72"	72"
#9	81"	81"

NOTE: SPLICE LENGTHS BASED ON:

1. f'm=1500 psi OR GREATER
2. GRADE 60 REINFORCING
3. STRENGTH DESIGN REQUIREMENTS

1 TYPICAL CMU STANDARD REINFORCING STEEL LAP SPLICES

N.T.S.

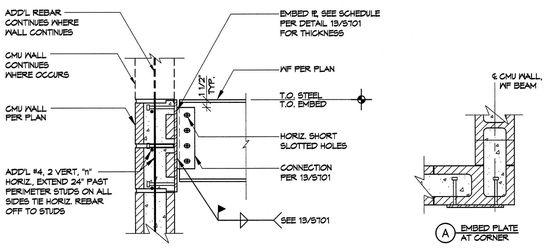

14 TYPICAL WF BEAM TO CMU WALL

1"=1'-0"

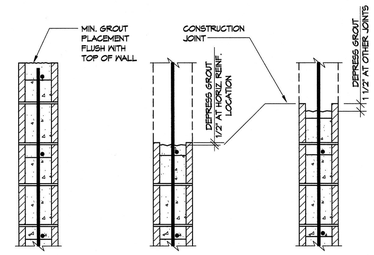

10 TYPICAL CMU GROUT CONSTRUCTION JOINTS

1"=1'-0"

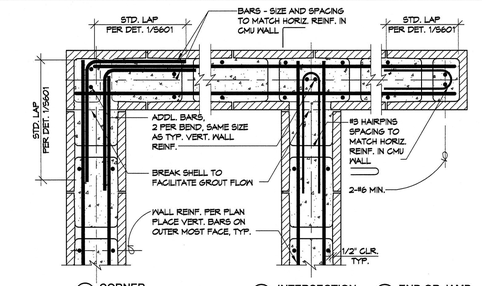

NOTES:

1. FOR REINF. REQUIREMENTS AT OPENINGS, ETC, SEE DET 11/S601
2. USE DOUBLE OPEN END BLOCKS TYP. USE SINGLE OPEN END BLOCKS AT CORNERS, WALL ENDS, JAMBS OR AT SPLIT FACE CMU.
3. PROVIDE VERTICAL DOWELS INTO CONCRETE STEM WALLS OR FOOTINGS. DOWELS SIZE AND SPACING TO MATCH VERTICAL REINF. IN CMU WALL.

6 PLAN - TYPICAL CMU WALL WITH DOUBLE CURTAIN REINFORCING

N.T.S.

NOTES:

SEE PLAN FOR ADD'L LOCATIONS WITH MORE STRINGENT REINFORCING

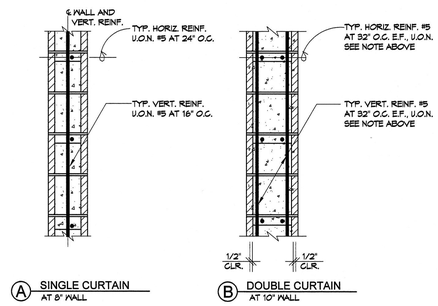

2 SECTION - TYPICAL CMU WALL REINFORCING

1"=1'-0"

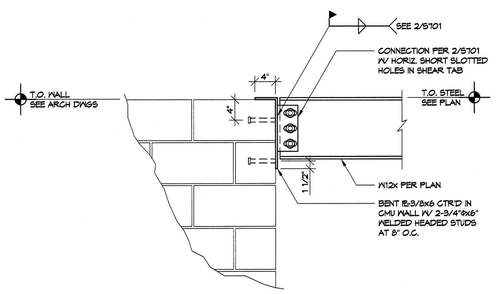

15 W12x TO END OF CMU WALL

1"=1'-0"

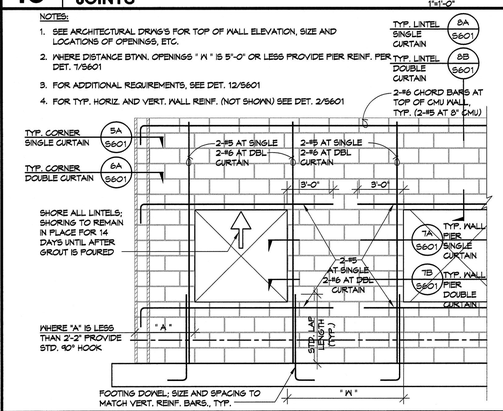

11 TYPICAL CMU WALL REINFORCING DETAILS

3/8"=1'-0"

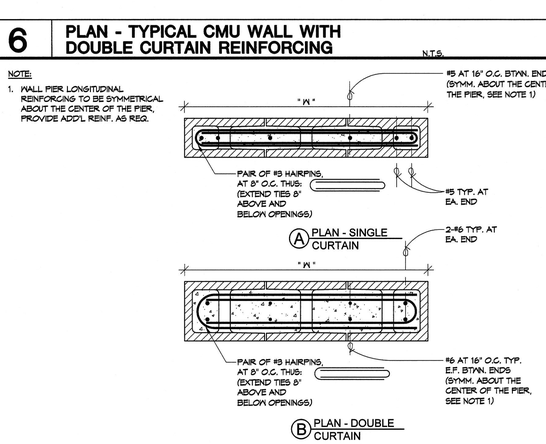

NOTE:

1. WALL PIER LONGITUDINAL REINFORCING TO BE SYMMETRICAL ABOUT THE CENTER OF THE PIER, PROVIDE ADD'L REINF. AS REQ.

7 PLAN - TYPICAL CMU WALL PIER REINFORCING

1"=1'-0"

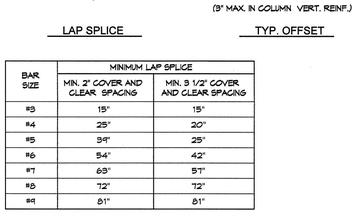

NOTES:

1. MINIMUM BOLT SPACING SHALL BE (12) BOLT DIAMETERS; PROVIDE EDGE DISTANCE OF (6) BOLT DIAMETERS AND/OR 6" MINIMUM TO END OF WALLS.
2. BOLTS SHALL BE ASTM A307, HEADED.

3 TYPICAL ANCHOR BOLTS CMU WALL

N.T.S.

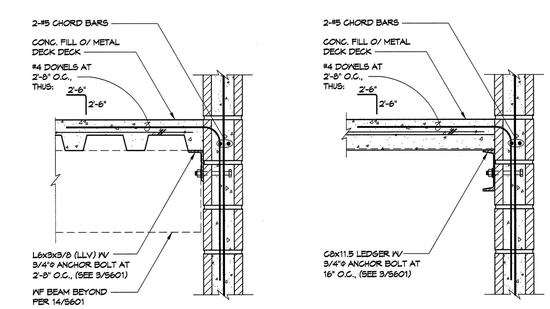

16 SECTION AT MEZZ. FLOOR AND FULL HT CMU WALL

1"=1'-0"

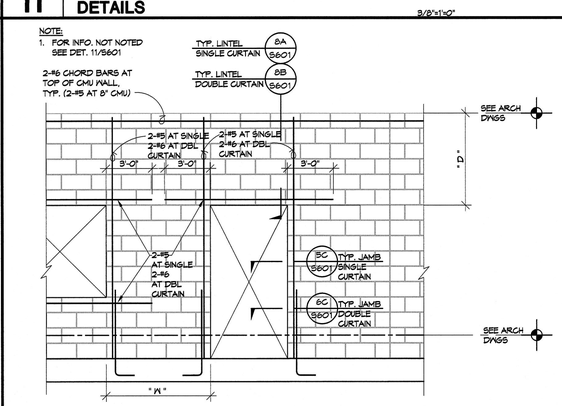

12 TYPICAL CMU WALL REINFORCING DETAILS

3/8"=1'-0"

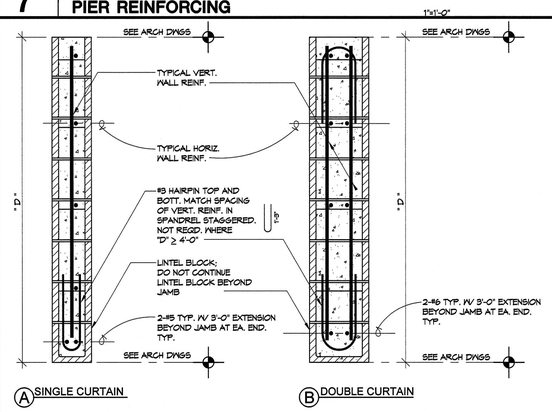

8 SECTION - TYPICAL CMU LINTEL REINFORCING

1"=1'-0"

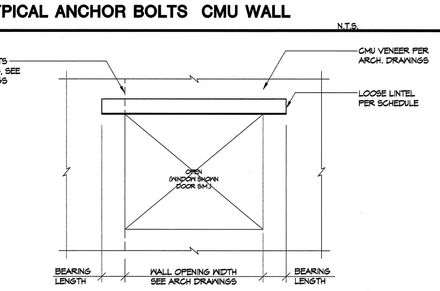

LOOSE LINTEL SCHEDULE		
OPENING WIDTH	LINTEL SIZE	BEARING EA. END
3'-4" MAX.	L 4x4x1/4	4"
6'-4" MAX.	L 6x4x1/4 LLV	8"
8'-0" MAX.	L 7x4x3/8 LLV	8"

NOTES:

1. ALL LOOSE LINTELS TO BE HOT-DIPPED GALVANIZED
2. FLASHING/ WATERPROOFING NOT SHOWN

4 VENEER LOOSE LINTEL

NO SCALE

PIVOT ARCHITECTURE

STRUCTURAL REGISTERED PROFESSIONAL ENGINEER 85387PE OREGON JAN. 29, 2021 VIKAI H. BOURCIER Expires: 12-31-21

IBI GROUP

HOHBACH-LEMIN, INC. STRUCTURAL ENGINEERS 296 East 5th Ave. Eugene, OR 97401 (541) 343-1701 Fax (541) 343-1702 Suite 302

BID DOCUMENT SET

EUGENE SCHOOL DISTRICT 4J
120 WEST HILLARD AVENUE, EUGENE OREGON 97404

RIVER ROAD / EL CAMINO DEL RIO ELEMENTARY SCHOOL

CMU DETAILS

PROJECT #:	13317
ISSUE DATE:	02.12.2018
DRAWN:	AMA
CHECKED:	VHB
REVISIONS:	

S601

H-L #9547.2

© 2014 PIVOT ARCHITECTURE

NOTES:
1. FOR REINF. AT EMBED. PL, SEE DET. 14/S601.
2. TIGHTEN BOLTS ONLY SUFFICIENT TO BRING WEB INTO CONTACT W/ SHEAR PLATE. AFTER DECK CONCRETE IS POURED, TIGHTEN "SNUG-TIGHT" PER AISC.

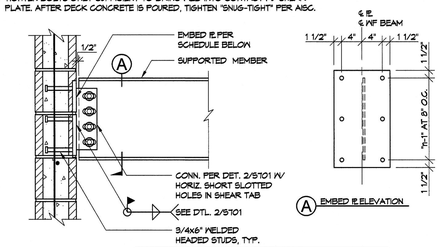

MEMBER SIZE	EMBED PL THICKNESS	# OF ROWS OF STUDS "n"	TOTAL # OF STUDS
W30	1/2"	6	12
W18, W16	3/8"	3	6
W14, W12	3/8"	3	6
W10*, W8, C10	3/8"	2	4

* SEE 4/S602 FOR CONN. OF W10 PARALLEL TO WALL END

13 TYPICAL BEAM CONNECTION TO CMU

1"=1'-0"

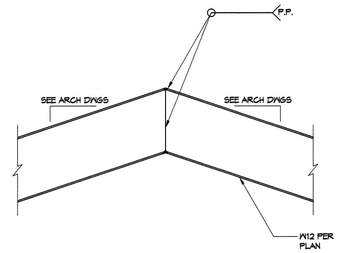

9 BENT WF BEAM AT CAFETERIA

1"=1'-0"

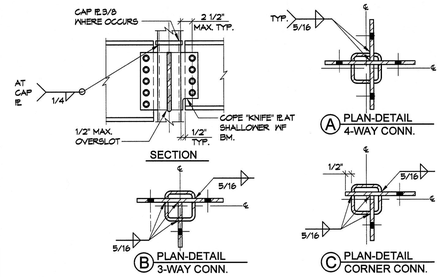

NOTES:
1. FOR REQD. DIMENSIONS, BOLTS, WELDS, SHEAR TAB SIZE AND OTHER INFO. NOT SHOWN OR NOTED, SEE DET/ 1/S701 AND DET. 4/S701.
2. SLOT TS FOR "KNIFE" PL.
3. "KNIFE" PL THICKNESS SAME AS SHEAR TAB THICKNESSES SHOWN IN DET. 4/S701.
4. CONTRACTOR'S OPTION: DET. 6/S701 MAY BE USED AT INT. COLUMNS WHERE BEAMS ARE 16" DEEP OR LESS.

5 TYPICAL WF BEAM TO HSS COLUMN CONNECTION

N.T.S.

NOTES:
1. FOR NUMBER OF BOLTS, AND WELD AND SHEAR TAB SIZE, SEE DET. 4/S701.
2. USE SIM. CONN AT SKEWED FRAMING CONDITION. SKEW SHEAR TAB TO MATCH SUPPORTED BEAM ALIGNMENT. TRIM FLANGE OF SUPPORTED MEMBER AT SKEW ANGLE.

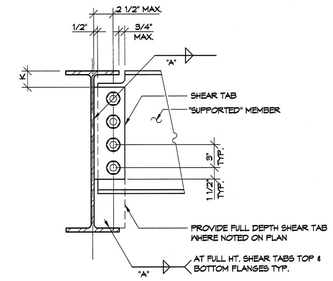

1 TYPICAL ONE-SIDED SHEAR CONNECTION

N.T.S.

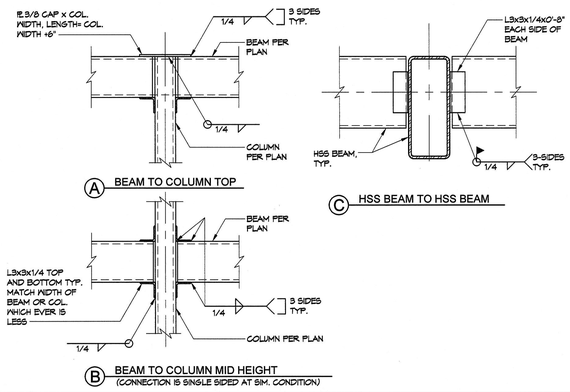

14 TYPICAL HSS TO HSS CONNECTION

1"=1'-0"

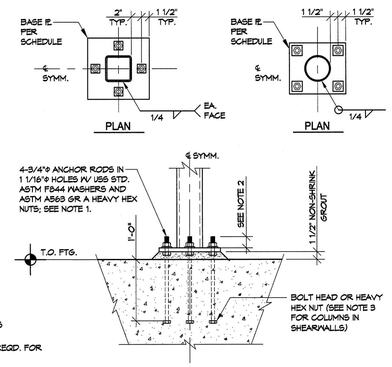

BASE PLATE SCHEDULE	
COLUMN	BASE PLATE (THICKNESS)
HSS 5x5	7/8"
HSS 6x6	7/8"
HSS 7x7	1"
5"ø STD PIPE	7/8"
8"ø X-S PIPE	7/8"
10"ø X-S PIPE	1"

NOTES:
1. ALTERNATE: PROVIDE 1 5/16"ø HOLES AND PL 1/4"x2" SQ. WASHERS.
2. A 3" PROJECTION BEYOND WHAT IS REQD. FOR CONNECTION IS RECOMMENDED.

10 TYPICAL HSS AND PIPE COLUMN BASE PLATES

1"=1'-0"

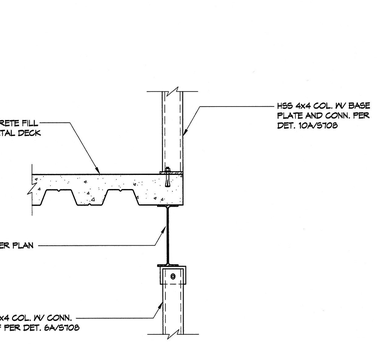

6 ELEVATOR GUIDE RAIL CONN. - 2ND FLR/MECH. PLATFORM

1"=1'-0"

NOTES:
1. FOR ITEMS NOT SHOWN OR NOTED, SEE DET. 4/S701.
2. CONSIDER THE CONNECTION ONE-SIDED WHERE BEAMS ARE OFFSET BY MORE THAN 12" OR "X" EXCEEDS 4".

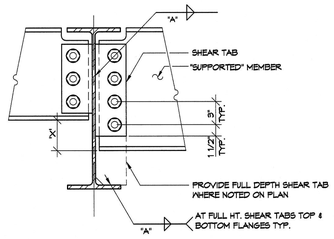

2 TYPICAL TWO-SIDED SHEAR CONNECTION

N.T.S.

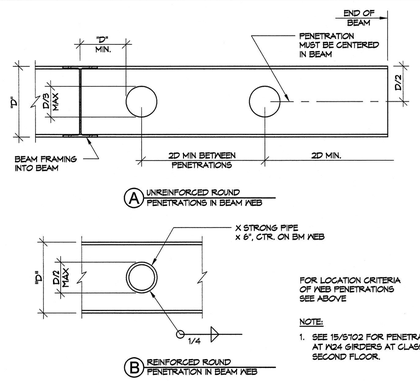

NOTE:
1. SEE 15/S702 FOR PENETRATIONS AT W24 GIRDERS AT CLASSROOM SECOND FLOOR.

15 PENETRATIONS THRU WF BEAM WEB

N.T.S.

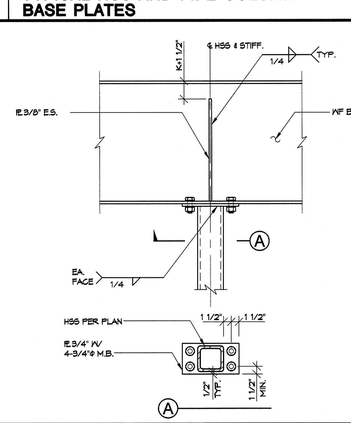

11 TYPICAL WF BEAM OVER HSS COLUMN

N.T.S.

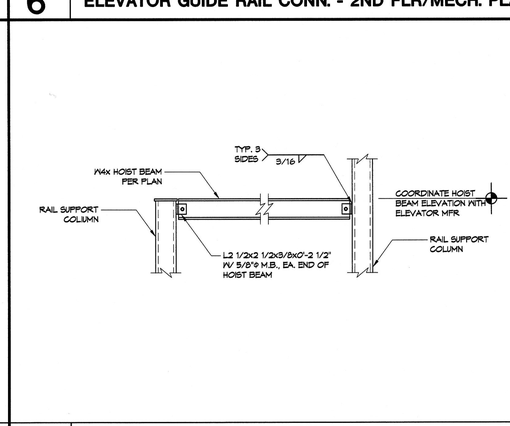

7 ELEVATOR GUIDE RAIL CONN. - ROOF

N.T.S.

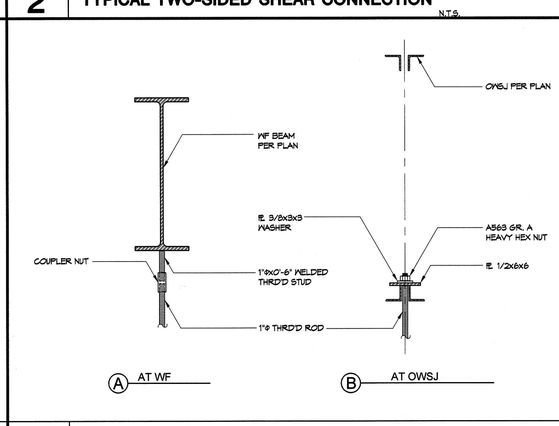

3 BRIDGE HANGER ROD ATTACHMENT AT ROOF

1"=1'-0"

NOTES:
1. SEE ARCH DWGS FOR FALL PROTECTION ANCHOR TYPES AND LOCATIONS.
2. AT OWSJ SUPPORTING FALL PROTECTION ANCHORS, OWSJ MFR TO DESIGN FOR THE CRITICAL OF THE FOLLOWING:
   - STRENGTH LEVEL MOMENT APPLIED TO THE OWSJ TOP CHORD, THUS: 12" 5k 5k
   - CONCENTRATED STRENGTH LEVEL LOAD (P) OF 700# APPLIED TO THE OWSJ TOP CHORD, THUS: P P OR P P 12" 12"

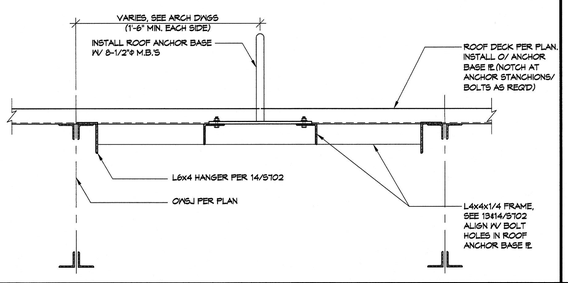

16 FALL PROTECTION ANCHOR AT ROOF

1"=1'-0"

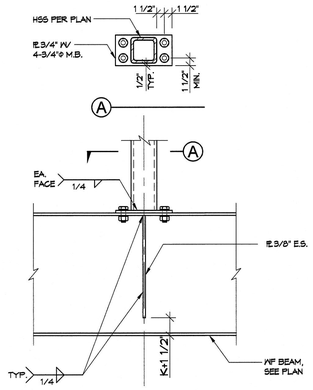

12 TYPICAL HSS COLUMN OVER WF BEAM

N.T.S.

NOTE:
1. FOR INFO. NOT NOTED, SEE DET. 2/S701.

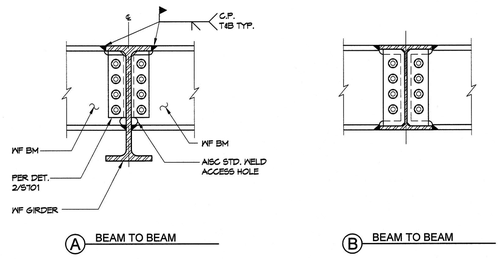

8 NON-SEISMIC MOMENT CONNECTION

N.T.S.

NOTES:
1. PROVIDE COMPLETE PENETRATION WELD BTWN. SHEAR TAB AND SUPPORTING MEMBER WHERE REQUIRED ANGLE IS OUTSIDE OF AWS PRE-QUALIFIED FILLET WELD LIMITATIONS.

NOMINAL SIZE OF SUPPORTED MEMBER	NO. OF 7/8" DIA A325N BOLTS (U.O.N.)	FILLET WELD SIZE "A"	SHEAR TAB THICKNESS (IN.)
W8, W10, C8, C10	2	5/16	3/8
W12, W14, C12, HSS12x	3	5/16	3/8
W16	4	5/16	3/8
W18	4	5/16	3/8
W21	5	5/16	3/8
W24	6	5/16	3/8
W27	7	5/16	3/8
W30	8	3/8	1/2
W33	9	3/8	1/2

4 TYPICAL BOLTED CONNECTION SCHEDULE

N.T.S.

PIVOT ARCHITECTURE

STRUCTURAL REGISTERED PROFESSIONAL ENGINEER 65387PE OREGON JAN 23, 2007 VIKRAM H. BOURGEER Expires: 12-31-17

IBI GROUP

tova

HOHBACH-LEMIN, INC. STRUCTURAL ENGINEERS
Suite 302
296 East 5th Ave.
Eugene, OR 97401
(541) 345-1701 Fax (541) 345-1702

BID DOCUMENT SET

EUGENE SCHOOL DISTRICT 4J
120 WEST HILLARD AVENUE, EUGENE OREGON 97404

RIVER ROAD / EL CAMINO DEL RIO ELEMENTARY SCHOOL

TYPICAL STEEL DETAILS

PROJECT #:	1337
ISSUE DATE:	02.12.2016
DRAWN:	AMA
CHECKED:	VHB
REVISIONS:	7/2014

S701

H-L #8547.2

© 2014 PIVOT ARCHITECTURE

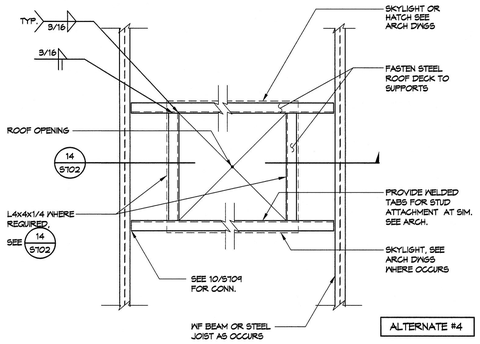

13 ROOF OPENING AT SKYLIGHT - FRAMING PLAN

1"=1'-0"

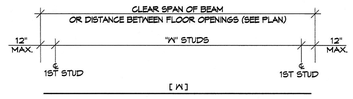

PLAN-STUD SHEAR CONNECTORS (UNIFORM SPACING)

NOTES:

1. SEE FRAMING PLANS FOR NUMBER AND/ OR SPACING REQUIREMENTS OF STUD SHEAR CONNECTORS.
2. SHEAR STUD CONNECTORS SHALL BE 3/4"ø STUDS CONFORMING TO ASTM A1044, FOR OTHER STUD REQUIREMENTS, SEE DET. 10/S702.
3. [N] DENOTES NO. OF STUDS UNIFORMLY SPACED ALONG FULL LENGTH OF BEAM.
4. [X, Y, Z] DENOTES NO. OF STUDS UNIFORMLY SPACED BETWEEN POINT LOADS (FROM INTERSECTING SUPPORTED MEMBERS, COLUMN ABOVE, ETC.)

9 TYPICAL STUD SHEAR CONNECTOR

CONTRACTORS OPTION:
PROVIDE CONT. BENT 54 MIL. PLATE BELOW SLOPED DECK. WELD TO BEAM AT SAME SPACING AS DECK WELD.

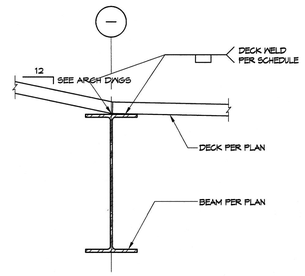

5 TYPICAL DECK SLOPE CHANGE AT WF BEAM

1 1/2"=1'-0"

MARK	DECK TYPE & GAUGE	DECK DEPTH	STEEL DECK ONLY			WELD ATTACHMENT		
			I(in⁴)	+S(in³)	-S(in³)	AT SUPPORT MEMBERS	AT PARALLEL MEMBERS	AT SIDELAPS
D1	VERCO FORMLOK WB 18 GA W/ 3" NW CONC. FILL	3"	1.20	0.761	0.761	1/2" ø EFFECTIVE PUDDLE WELD AT EA. FLUTE (6)	1/2" ø EFFECTIVE PUDDLE WELD AT 12" O.C. (6)	BUTTON PUNCH AT 12" O.C.
D2	VERCO PLB-36 18 GA.	1 1/2"	.306	.314	.331	1/2" ø EFFECTIVE PUDDLE WELD AT EA. FLUTE (1)	1/2" ø EFFECTIVE PUDDLE WELD AT 12" O.C. (1)	PUNCHLOK AT 12" O.C.
D3	VERCO PLN-24 18 GA.	3"	1.369	0.652	0.735	1/2" ø EFFECTIVE PUDDLE WELD AT EA. FLUTE (1)	1/2" ø EFFECTIVE PUDDLE WELD AT 12" O.C. (1)	PUNCHLOK AT 12" O.C.
D4	VERCO PLN-24 (ACOUSTICAL) 18 GA.	3"	1.369	0.652	0.735	1/2" ø EFFECTIVE PUDDLE WELD AT EA. FLUTE (1)	1/2" ø EFFECTIVE PUDDLE WELD AT 12" O.C. (1)	PUNCHLOK AT 12" O.C.
D5	VERCO FORMLOCK PLB W/ 2 1/2" NW CONC. FILL	1 1/2"	0.306	0.314	0.331	1/2" ø EFFECTIVE PUDDLE WELD AT EA. FLUTE (6)	1/2" ø EFFECTIVE PUDDLE WELD AT 12" O.C. (6)	PUNCHLOK AT 12" O.C.

NOTE: SEE DETAIL 2/S702 FOR STEEL DECK NOTES.

1 STEEL DECK PROPERTIES

N.T.S.

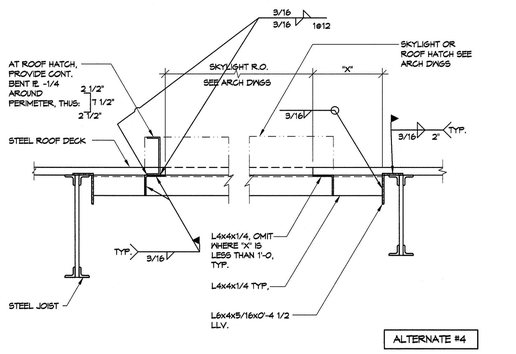

14 SECTION THRU ROOF SKYLIGHT

1"=1'-0"

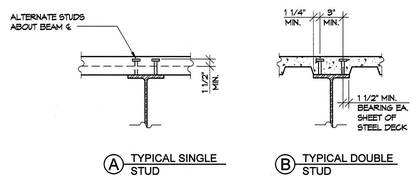

(A) TYPICAL SINGLE STUD

(B) TYPICAL DOUBLE STUD

NOTES:

1. SPACE STUDS EVENLY ALONG BEAM; STUD SPACING SHALL NOT BE GREATER THAN 2'-0" NOR LESS THAN 4 1/2".
2. PROVIDE DOUBLE STUDS WHERE SINGLE STUD SPACING WOULD BE LESS THAN 4 1/2".
3. LOCATE STUDS IN CENTER OF BOTTOM FLUTE WHEN DECK IS PERPENDICULAR TO BEAM. LIMIT ONE STUD PER FLUTE.
4. SPLIT DECK LONGITUDINALLY AND PROVIDE 43 MIL CLOSURE WHERE REQ'D. TO ENLARGE TROUGH.

10 TYPICAL SHEAR STUD CONNECTOR

NOTE:

1. FOR OPENING LESS THAN 2'-0" WIDE, SEE DET. 7/S702.

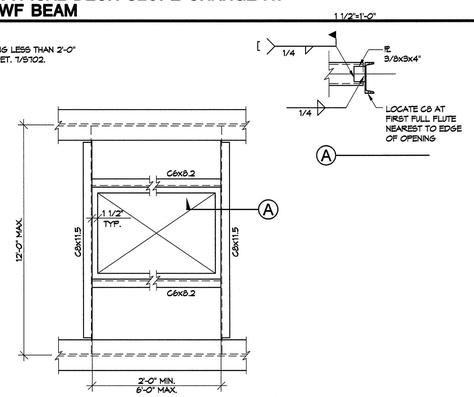

6 TYPICAL STEEL DECK OPENING LARGER THAN 2'-0"

1 1/2"=1'-0"

1. STRUCTURAL PROPERTIES OF STEEL DECK SYSTEM SHALL EQUAL OR EXCEED THE PROPERTIES LISTED IN DETAIL 1/S702.
2. SEE MANUFACTURER'S SPECIFICATIONS FOR ADDITIONAL INFO.
3. DECK SHALL BE CONTINUOUS OVER 3 SPANS WHEREVER POSSIBLE PROVIDE SHORING AS REQUIRED PER MANUFACTURER'S RECOMMENDATIONS.
4. DECK SHALL HAVE A MINIMUM OF 2" BEARING AT ALL SUPPORTING MEMBERS PERPENDICULAR TO DECK SPAN, AND 1" AT ALL PARALLEL MEMBERS.
5. DECK ATTACHMENTS SHALL BE AS NOTED IN DETAIL 1/S702.
6. A STUD WELDED THROUGH THE DECK SUBSTITUTES FOR A PUDDLE WELD.
7. CONTRACTORS OPTION TO SUBSTITUTE HILTI L.V.F. FOR WELDS ON A 1:1 BASIS. L.V.F. SHALL BE SELECTED BASED ON THE THICKNESS OF THE SUBSTRATE MATERIAL AS FOLLOWS:
   X-EDN22: $1/8" \le t \le 1/4"$
   X-HSN24: $1/8" \le t \le 3/8"$
   X-ENP14: $t \ge 1/4"$
8. OPENINGS THROUGH DECKING SHOWN ON FRAMING PLANS ARE NOT COMPLETE AS TO NUMBER, SIZE AND LOCATION. FOR COMPLETE INFORMATION REFER TO DRAWINGS OTHER THAN STRUCTURAL.
9. USE STRENGTHENING AT OPENINGS AS SHOWN IN DETAILS 6/S702 AND 7/S702 PROVIDE STRENGTHENING BEFORE CUTTING OPENING.
10. MULTIPLE OPENINGS WITH A CLEAR DISTANCE LESS THAN THREE TIMES THE SIZE OF THE LARGER OPENING TO BE TREATED AS A SINGLE GROUP OPENING.
11. IF OPENING IS CUT PRIOR TO FILL PLACEMENT, PROVIDE CLOSURE PIECES AND SHORING AS REQUIRED.
12. FOR OPENINGS THROUGH DECK THAT CUT ONLY ONE WEB AND ARE LESS THAN 5" SQUARE OR 5" DIAMETER MAXIMUM, NO STRENGTHENING IS REQUIRED.
13. SEE MECHANICAL/ PLUMBING DRAWINGS FOR DETAILS OF UTILITIES SUSPENDED FROM THE CONCRETE AND STEEL DECK SYSTEM.
14. DO NOT PLACE CONDUITS OR OTHER PIPES IN CONCRETE FILL OVER DECK.

2 STEEL DECK NOTES

NOTE:

1. DETAIL APPLIES TO PENETRATIONS THRU TYP. W24x SECOND FLOOR BEAMS AT CLASSROOMS ONLY. PENETRATIONS AT OTHER MEMBERS OR THAT DO NOT MEET THE CRITERIA SHOWN REQUIRE WRITTEN APPROVAL.

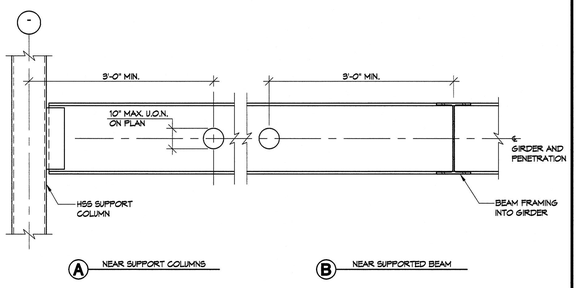

(A) NEAR SUPPORT COLUMNS

(B) NEAR SUPPORTED BEAM

15 PENETRATIONS THRU W24 GIRDER WEBS AT CLASSROOM SECOND FLOOR

N.T.S.

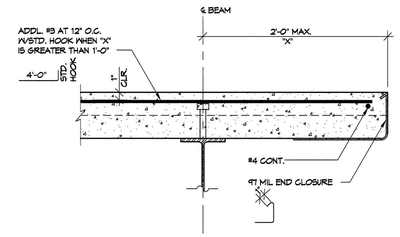

11 TYPICAL EDGE OF DECK (PERPENDICULAR TO BEAM)

1 1/2"=1'-0"

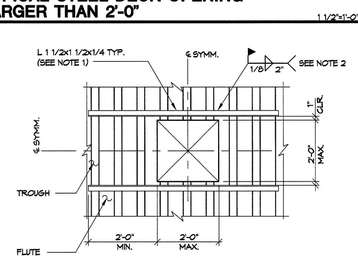

NOTES:

1. AT CONTRACTOR'S OPTION: WELD ANGLES BELOW STEEL DECK.
2. WELD ANGLES TO A MINIMUM OF TWO FULL DECK FLUTES EACH END OF EACH ANGLE.
3. NO DECK REINFORCING REQ'D. WHEN OPENING IS LESS THAN 5" WIDE.
4. THIS DETAIL SHALL NOT APPLY FOR MULTIPLE OPENINGS SPACED LESS THAN 6 FT. O.C. UNLESS SPECIFICALLY APPROVED BY STRUCTURAL ENGINEER.

7 TYPICAL STEEL DECK OPENING SMALLER THAN 2'-0"

1 1/2"=1'-0"

(A) LAP JOINT

(B) BUTT JOINT

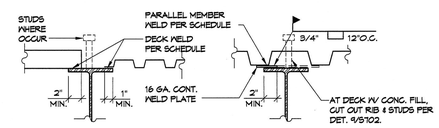

(C) DECK DIRECTION CHANGE

(D) DECK OFFSET

NOTE:

1. SEE STEEL DECK NOTES AND DECK SCHEDULE FOR COMPLETE INFORMATION.

3 TYPICAL DECK ATTACHMENT

N.T.S.

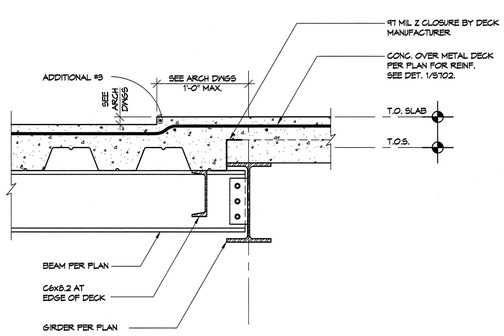

16 TYPICAL DEPRESSED SLAB

1 1/2"=1'-0"

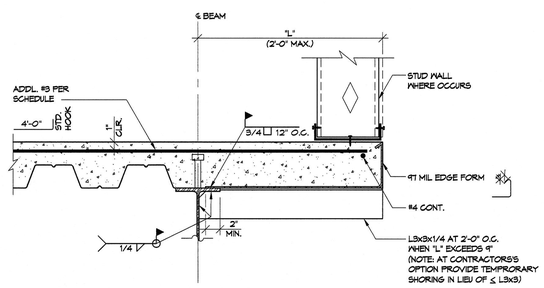

"L"	SPACING ADD'L #3
≤ 9"	NOT REQ'D
9" ≤ 15"	18"
15" ≤ 21"	16"

12 TYPICAL EDGE OF DECK (PARALLEL TO BEAM)

1 1/2"=1'-0"

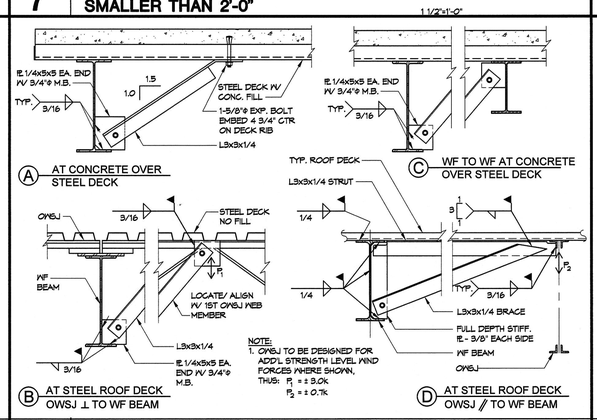

NOTE:

1. OWSJ TO BE DESIGNED FOR ADD'L STRENGTH LEVEL WIND FORCES WHERE SHOWN, THUS: $F_1 = \pm 3.0k$, $F_2 = \pm 0.7k$

8 TYPICAL BEAM BOTTOM FLANGE BRACING

N.T.S.

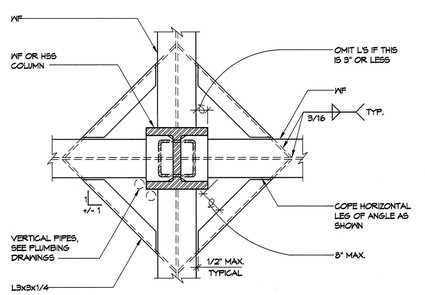

4 TYPICAL STEEL DECK SUPPORT AT COLUMN

1"=1'-0"

PIVOT ARCHITECTURE

STRUCTURAL REGISTERED PROFESSIONAL ENGINEER 65387PE OREGON JAN 29, 2021 VIKRAM H. BOURGEER

Expires: 12-31-17

IBI GROUP

dowa

HOHBACH-LEWIN, INC. STRUCTURAL ENGINEERS
296 East 5th Ave. Suite 302
Eugene, OR 97401
(541) 345-1701 Fax (541) 349-1702

BID DOCUMENT SET

EUGENE SCHOOL DISTRICT 4J
1200 WEST HILLARD AVENUE, EUGENE OREGON 97404

RIVER ROAD / EL CAMINO DEL RIO ELEMENTARY SCHOOL

TYPICAL STEEL DETAILS

PROJECT #:	1307
ISSUE DATE:	02.12.2015
DRAWN:	AMA
CHECKED:	VHB

REVISIONS:

S702

H-L #9647.2

© 2014 PIVOT ARCHITECTURE

NOTES
1. SEE DETAIL 1/S703 FOR BRACED FRAME NOTES.

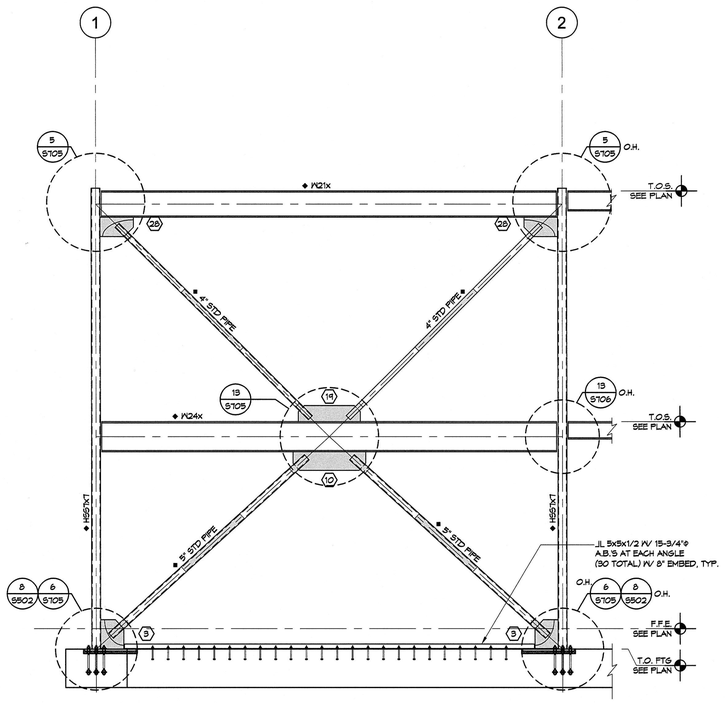

5 BRACED FRAME BF-3 ELEVATION 1/4"=1'-0"

NOTES
1. SEE DETAIL 1/S703 FOR BRACED FRAME NOTES.

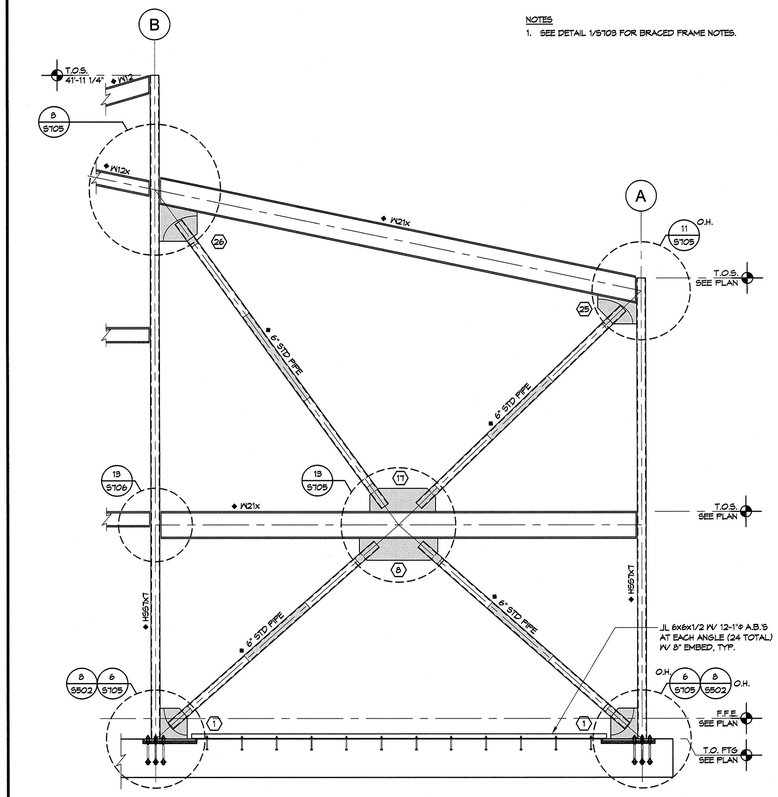

3 BRACED FRAME BF-1C ELEVATION 1/4"=1'-0"

NOTES
1. SEE DETAIL 2/S703 FOR SPECIAL CONCENTRIC BRACED FRAME NOTES.
2. ⬡ DENOTES GUSSET PLATE; SEE SCHEDULE ON DET. 16/S704.
3. ▭ DENOTES PROTECTED ZONE. PROTECTED ZONE IS MIDDLE L/4 OF BRACE, CONNECTION, AND PORTION OF BRACE WITHIN D OF CONNECTION. "L" IS THE LENGTH OF THE BRACE MEASURED FROM HINGE LINE TO HINGE LINE. "D" IS THE WIDTH OF THE BRACE. SEE SCBF NOTES FOR LIMITATIONS WITHIN THE PROTECTED ZONE.
4. SEE DETAIL 8/S902 FOR TYPICAL METAL STUD WALL INSTALLATION AT BRACES IN BRACED FRAME BAYS UNLESS OTHERWISE NOTED IN NOTE 5.
5. SEE DETAIL 10/S902 FOR METAL STUD WALL INSTALLATION AT 6" STD PIPE BRACES, TYP. AT (BF-1A/1B/1C)

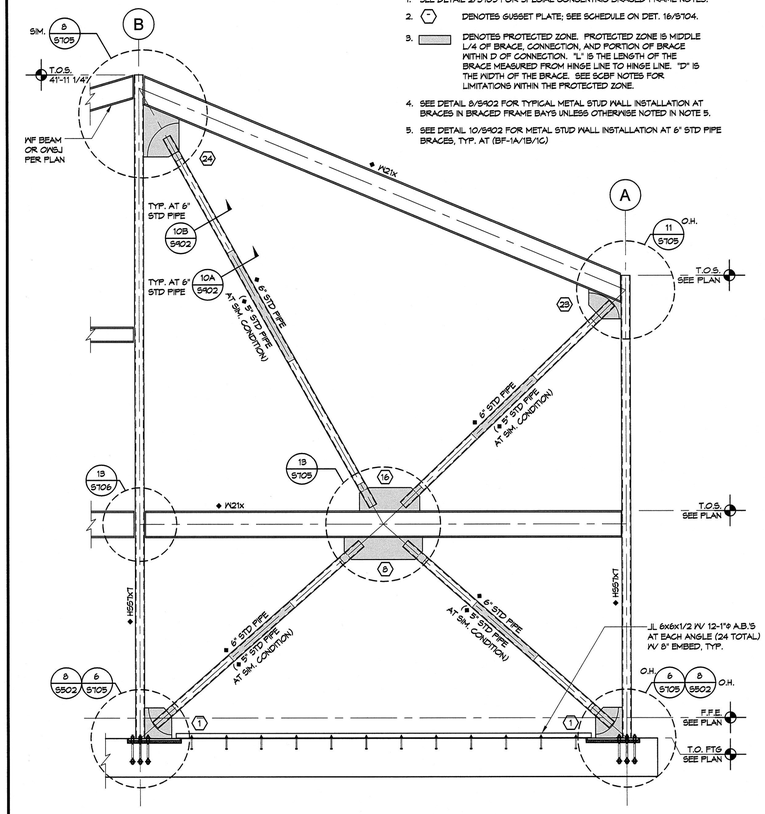

1 BRACED FRAME BF-1A ELEVATION (BF-1 IS SIMILAR) 1/4"=1'-0"

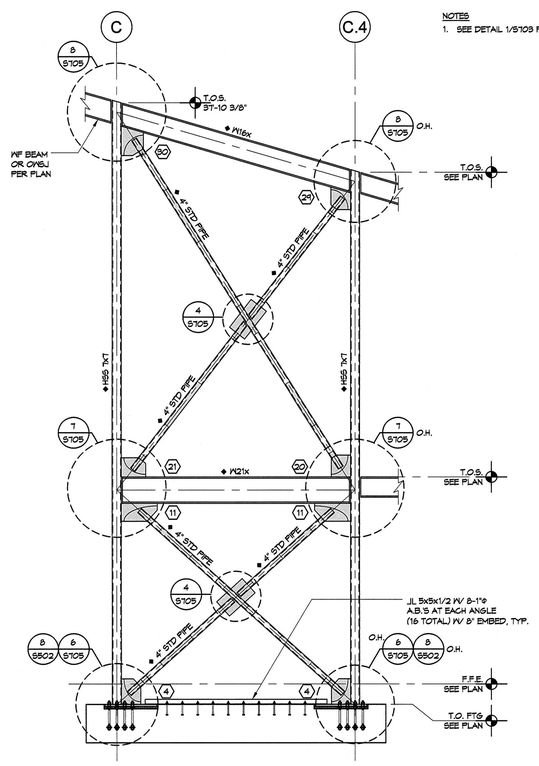

6 BRACED FRAME BF-4 ELEVATION 1/4"=1'-0"

NOTES
1. SEE DETAIL 1/S703 FOR BRACED FRAME NOTES.

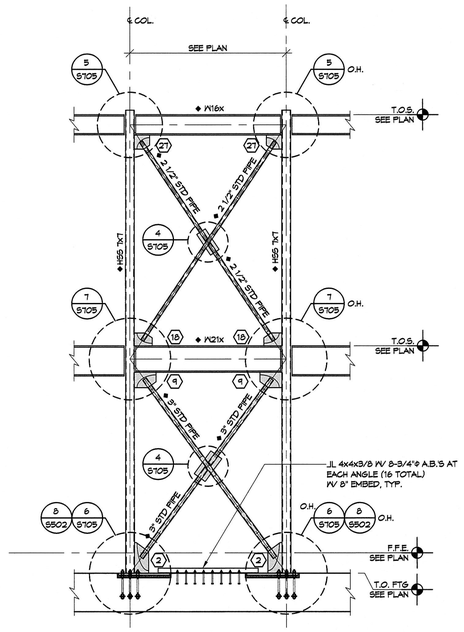

4 BRACED FRAME BF-2 ELEVATION 1/4"=1'-0"

NOTES
1. SEE DETAIL 1/S703 FOR BRACED FRAME NOTES.

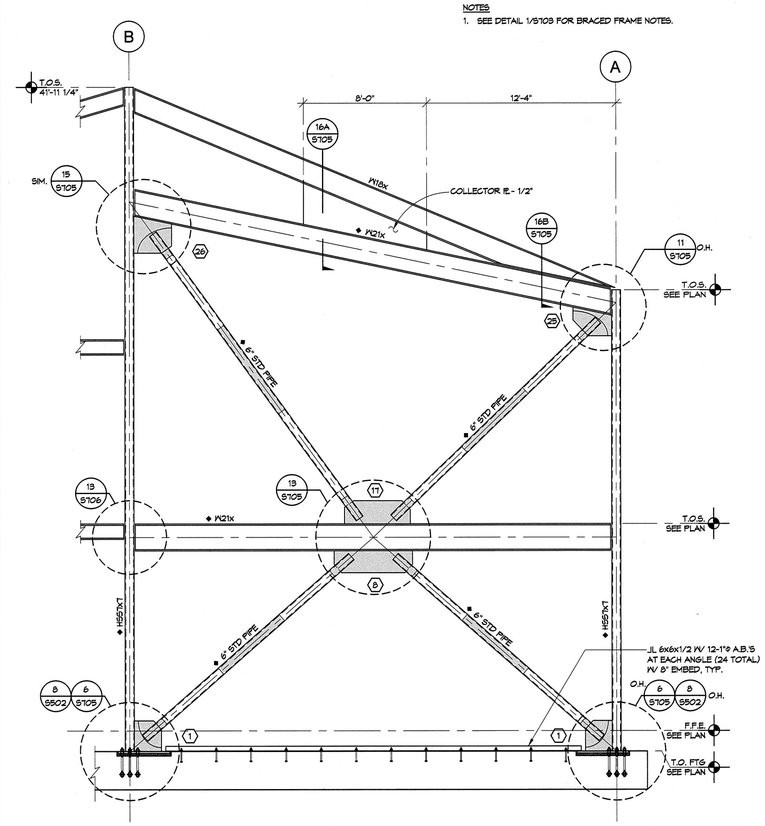

2 BRACED FRAME BF-1B ELEVATION 1/4"=1'-0"

PIVOT ARCHITECTURE

STRUCTURAL ENGINEER REGISTERED PROFESSIONAL ENGINEER 65387PE OREGON JAN 23 2001 MARK H. BOURGEIN Expires: 12-31-17

IBI GROUP

dowa

HOHBACH-LEWIN, INC. STRUCTURAL ENGINEERS
296 East 5th Ave. Suite 302
Eugene, OR 97401
(541) 345-0751 Fax (541) 349-1702

BID DOCUMENT SET

EUGENE SCHOOL DISTRICT 4J
120 WEST HILLARD AVENUE, EUGENE OREGON 97404

RIVER ROAD / EL CAMINO DEL RIO ELEMENTARY SCHOOL

STEEL BRACED FRAME ELEVATIONS

PROJECT #:	1337
ISSUE DATE:	02.12.2016
DRAWN:	AMA
CHECKED:	VHB
REVISIONS:	

S703

H-L #9547.2

© 2014 PIVOT ARCHITECTURE

13

9

5

BRACE & GUSSET PLATE WELDING

CONNECTION NUMBER	DETAIL NUMBER	"t"	L_H	W_H	L_V	W_V	L_B	W_B
1	6/S105	3/8"	20"	5/16"	23"	5/16"	14"	1/4"
1, SIM	6/S105	3/8"	17"	5/16"	21"	5/16"	11"	1/4"
2	6/S105	1/4"	10"	3/16"	23"	3/16"	7"	3/16"
3	6/S105	3/8"	17	5/16"	22"	5/16"	11"	1/4"
4	6/S105	1/4"	14"	3/16"	19"	3/16"	10"	3/16"
5	6/S105	1/4"	10"	3/16"	18"	3/16"	7	3/16
6	6/S105	1/4"	11"	3/16"	14"	3/16"	7"	3/16"
7	6/S105	1/4"	9"	3/16"	12"	3/16"	6"	3/16"
8	13/S105	3/8"	61"	5/16"	-	-	14"	1/4"
8, SIM	13/S105	3/8"	55"	5/16"	-	-	11"	1/4"
9		1/4"	16"	3/16"	11"	3/16"	7"	3/16"
10	13/S105	3/8"	57"	5/16"	-	-	11"	1/4"
11		1/4"	27"	3/16"	13"	3/16"	10"	3/16"
12	7/S105	1/4"	22"	3/16"	10"	3/16"	7"	3/16"
13	5/S105	1/4"	33"	3/16"	10"	3/16"	7"	3/16"
14	5/S105	1/4"	20"	3/16"	8"	3/16"	6"	3/16"
15	5/S105	1/4"	22"	3/16"	10"	3/16"	6"	3/16"
16	13/S105	3/8"	47"	5/16"	-	-	14"	1/4"
16, SIM	13/S105	3/8"	42"	5/16"	-	-	11"	1/4"
17	13/S105	3/8"	52"	5/16"	-	-	14"	1/4"
18	7/S105	1/4"	13"	3/16"	9"	3/16"	6"	3/16"
19	13/S105	1/4"	48"	3/16"	-	-	10"	3/16"
20	7/S105	1/4"	14"	3/16"	16"	3/16"	10"	3/16"
21	7/S105	1/4"	18"	3/16"	14"	3/16"	10"	3/16"
22	7/S105	1/4"	20"	3/16"	10"	3/16"	7"	3/16"
23	11/S105	3/8"	26"	1/4"	11"	1/4"	14"	1/4"
23, SIM	11/S105	3/8"	23"	5/16"	8"	5/16"	11"	1/4"
24	8/S105	3/8"	30"	5/16"	40"	5/16"	14"	1/4"
24, SIM	8/S105	3/8"	24"	5/16"	36"	5/16"	11"	1/4"
25	11/S105	3/8"	30"	1/4"	15"	5/16"	14"	1/4"
26	15/S105	3/8"	29"	1/4"	28"	5/16"	14"	1/4"
27	5/S105	1/4"	11"	3/16"	10"	3/16"	6"	3/16"
28	5/S105	1/4"	25"	3/16"	14"	3/16"	10"	3/16"
29	11/S105	1/4"	15"	3/16"	12"	3/16"	10"	3/16"
30	11/S105	1/4"	17"	3/16"	22"	3/16"	10"	3/16"
31	5/S105	1/4"	15"	3/16"	10"	3/16"	7"	3/16"

NOTES:

1. ALL CONNECTION WELDS SHALL EXTEND THE FULL LENGTH OF GUSSET PLATES. THE WELD LENGTHS IN THE TABLE ARE MINIMUMS.
2. WELD LENGTHS ARE NOT PLATE DIMENSIONS. SIZE PLATES TO ACCOMODATE THE SPECIFIED WELDS AND MEET OTHER GEOMETRIC REQUIREMENTS AS SHOWN ON THE DETAILS.

16 **BRACE & GUSSET PLATE WELDING SCHEDULE**

10

6

NOTES

1. SEE DETAIL 2/S105 FOR SPECIAL CONCENTRIC BRACED FRAME NOTES.
2. ⬡ DENOTES GUSSET PLATE; SEE SCHEDULE ON DET. 16/S104.
3. ▭ DENOTES PROTECTED ZONE. PROTECTED ZONE IS MIDDLE L/4 OF BRACE, CONNECTION, AND PORTION OF BRACE WITHIN 'D' OF CONNECTION. "L" IS THE LENGTH OF THE BRACE MEASURED FROM HINGE LINE TO HINGE LINE. "D" IS THE WIDTH OF THE BRACE. SEE SCBF NOTES FOR LIMITATIONS WITHIN THE PROTECTED ZONE.
4. SEE DETAIL 10/S402 FOR METAL STUD WALL INSTALLATION AT 6" STD PIPE BRACES, TYP. AT (BF-1A/1B/1C)

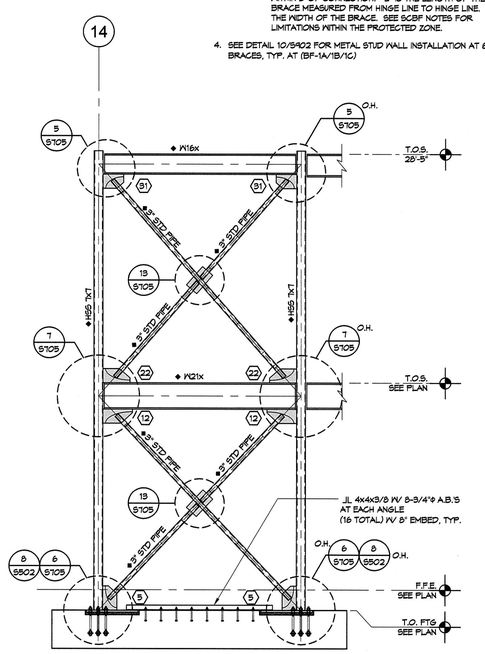

1 **BRACED FRAME BF-5 ELEVATION**

1/4"=1'-0"

11

7

NOTES

1. SEE DETAIL 1/S104 FOR BRACED FRAME NOTES.

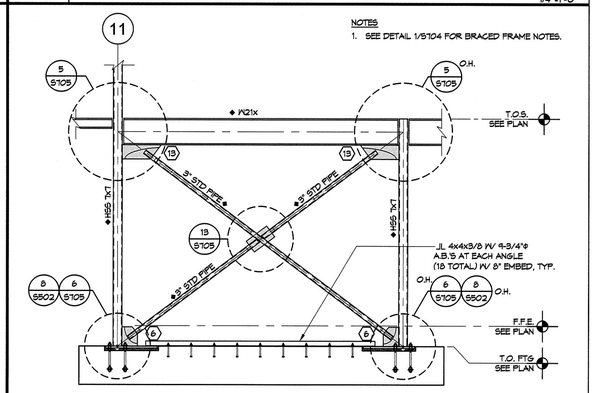

2 **BRACED FRAME BF-6 ELEVATION**

1/4"=1'-0"

12

8

NOTES

1. SEE DETAIL 1/S104 FOR BRACED FRAME NOTES.

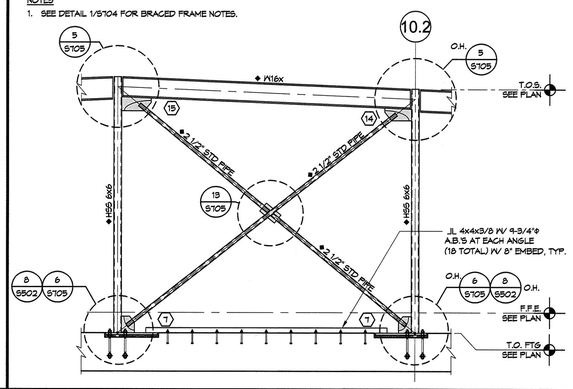

3 **BRACED FRAME BF-7 ELEVATION**

1/4"=1'-0"

PIVOT ARCHITECTURE

STRUCTURAL REGISTERED PROFESSIONAL ENGINEER R. 66387PE OREGON JAN. 23, 2001 VIKKI H. BOURCIER Expires: 12-31-17

IBI GROUP

HOHBACH-LEWIN, INC. STRUCTURAL ENGINEERS
296 East 5th Ave. Eugene, OR 97401
(541) 345-1701 Fax (541) 345-1702 Suite 302

BID DOCUMENT SET

EUGENE SCHOOL DISTRICT 4J
120 WEST HILLIARD AVENUE, EUGENE OREGON 97404

RIVER ROAD / EL CAMINO DEL RIO ELEMENTARY SCHOOL

STEEL BRACED FRAME ELEVATIONS AND DETAILS

PROJECT #:	1337
ISSUE DATE:	02.12.2016
DRAWN:	AMA
CHECKED:	VHB

REVISIONS:

S704

H-L #9547.2

© 2014 PIVOT ARCHITECTURE

NOTE:
1. 1" COMPRESSIBLE MATERIAL REQUIRED EACH SIDE OF GUSSET PLATE IN CONCRETE SLAB, SEE DET. 7/S705.

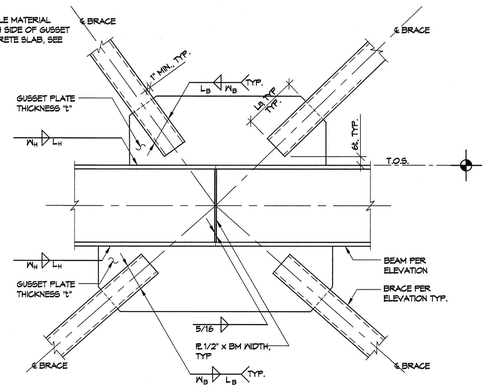

13 GUSSET PLATE DETAIL

3/4"=1'-0"

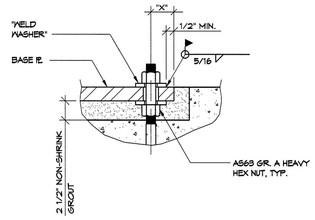

ANCHOR ROD DIAMETER	OVERSIZE HOLE SIZE IN BASE PL	WELD WASHER PLATE	"X" MIN.
1"	1 1/2"	PL 3/8x3x3	2 1/4"
1 1/2"	2 1/4"	PL 1/2x3 1/2x3 1/2	3"

14 TYPICAL WELD WASHER AT OVERSIZED A.B. HOLE

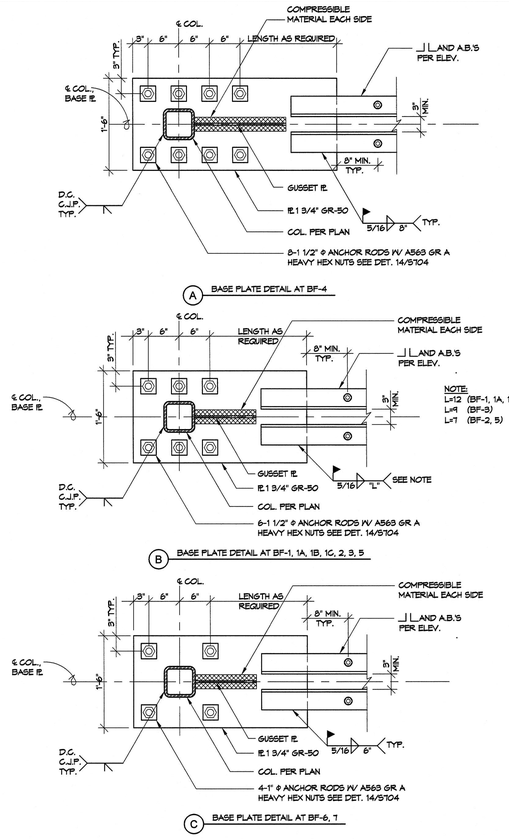

10 BASE PLATE DETAILS

1"=1'-0"

NOTES:
1. BRACE REINFORCING PLATES OMITTED FOR CLARITY; SEE DET. 3/S705.
2. SEE DET. 16/S704 FOR BRACE AND GUSSET WELDING SCHEDULE.
3. BRACE SHALL TERMINATE OUTSIDE OF ELLIPTICAL HINGE LINE AS SHOWN.

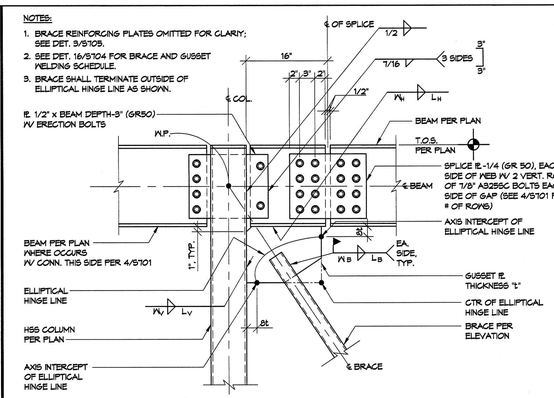

5 GUSSET PLATE DETAIL AT ROOF

1"=1'-0"

NOTE:
1. FOR ITEMS NOT SHOWN OR NOTED, SEE DET. 5/S704

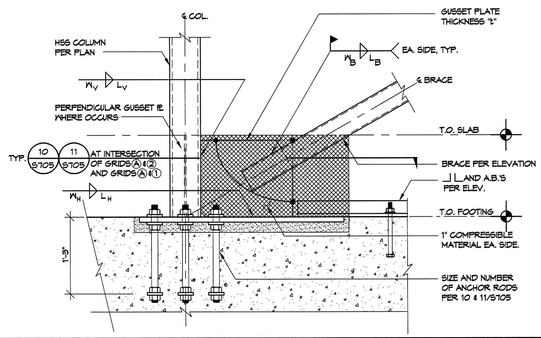

6 GUSSET PLATE DETAIL

1"=1'-0"

SCBF SLRS NOTES

A. SEISMIC LOAD RESISTING SYSTEM:
ALL STRUCTURAL STEEL MEMBERS SPECIFIED (I.E., WITH SIZE GIVEN) ON THIS SHEET AND ALL CONNECTIONS DETAILED ON THIS SHEET ARE HEREBY DESIGNATED PART OF THE OF THE SEISMIC LOAD RESISTING SYSTEM (SLRS). SEE PLAN AND ELEVATIONS FOR ADDITIONAL ELEMENTS OF THE SLRS. SUCH MEMBERS & CONNECTIONS ARE DESIGNATED THUS: ◆.
IN ADDITION TO THE 2005 AISC SPECIFICATION AND D1.1, & THE RCSC SPECIFICATION, ELEMENTS OF THE SLRS SHALL MEET THE FOLLOWING:
1. PLATES: ASTM A572 GRADE 50.
2. WELD ELECTRODES:
   TYPICAL: E70XX; MIN. CVN 20FT-LB AT 0°F
   DEMAND CRITICAL (D.C.): E70XX; MIN. CVN 20FT-LB AT -20°F; 40FT-LB AT 70°F.
   DIFFUSIBLE HYDROGEN (ALL ELECTRODES): H16 MAX.
3. HIGH STRENGTH BOLTS: ASTM A325-N PRE-TENSIONED; MEET THE REQUIREMENTS FOR SLIP-CRITICAL FAYING SURFACES WITH A CLASS A FAYING SURFACE.
4. ANCHOR RODS:
   TYPICAL: ASTM F1554 GRADE 36 W/ ASTM A563 HEAVY HEX NUTS
   WELDABLE: ASTM F1554 GRADE 55 S1 W/ ASTM A563 HEAVY HEX NUTS

B. PROTECTED ZONE:
WELDED, BOLTED, SHOT-IN, AND SCREWED-IN ATTACHMENTS ARE PROHIBITED IN THE IN THE PROTECTED ZONE. EXCEPTION: ERECTION BOLTS FOR BRACE INSTALLATION ARE PERMITTED. LEAVE ERECTION BOLTS IN PLACE.
1. SCBF: PROTECTED ZONE IS THE MIDDLE L/4 OF THE BRACE, CONNECTION, AND THE PORTION OF THE BRACE WITHIN D OF THE CONNECTION. "L" IS THE LENGTH OF THE BRACE MEASURED FROM HINGE LINE TO HINGE LINE. "D" IS THE WIDTH OF THE BRACE.

C. SHOP/ERECTION DRAWINGS:
SHOP AND ERECTION DRAWINGS SHALL INCLUDE THE FOLLOWING IN ADDITION TO ITEMS REQUIRED BY THE AISC SPEC., AWS D1.1, AND THE RCSC SPEC.
1. DESIGNATION OF MEMBERS AND CONNECTIONS THAT ARE PART OF THE SLRS.
2. CONNECTION MATERIAL SPECIFICATIONS AND SIZES (DIMENSION ALL WELDS).
3. LOCATIONS AND DIMENSIONS OF PROTECTED ZONES.
4. GUSSET PLATES DRAWN TO SCALE WITH HINGE LINES SHOWN.

D. WELDING REQUIREMENTS:
WELDING SHALL CONFORM TO THE 2005 AISC SEISMIC PROVISIONS, APPENDIX W OR AWS D1.8 (2006) AND SHALL INCLUDE, BUT NOT BE LIMITED TO THE FOLLOWING:
1. WELD PROCEDURE SPECIFICATIONS (WPS) SHALL INCLUDE POWER SOURCE, ELECTRODE MFR. AND TRADE NAME, AND ELECTRODE MFR'S CUTSHEET AND CERTIFICATIONS.
2. FCAW-S FILLER METALS SHALL NOT BE INTERMIXED WITH THOSE OF OTHER PROCESSES.
3. DEMAND CRITICAL WELDS FOR SCBF INCLUDE COMPLETE PENTRATION GROOVE WELDS AT COLUMN SPLICES AND COLUMN BASE PLATES.

E. QUALITY ASSURANCE PLAN:
QUALITY ASSURANCE SHALL BE PER THE 2005 AISC SEISMIC PROVISIONS, APPENDIX Q AND SHALL INCLUDE BUT NOT BE LIMITED TO THE FOLLOWING:
1. WELDING QA/QC PERSONEL SHALL BE QUALIFIED IN ACCORDANCE WITH THE SEISMIC PROVISIONS (SECTION N3).
2. VISUAL WELDING INSPECTION SHALL BE PERFORMED AT THE INSPECTION POINTS GIVEN IN THE SEISMIC PROVISIONS (SECTION Q5.1)
3. NONDESTRUCTIVE TESTING (NDT), IF REQUIRED, SHALL BE PERFORMED IN ACCORDANCE WITH THE SEISMIC PROVISIONS (SECTION N4). NDT IS REQUIRED FOR THE FOLLOWING (SEE SEISMIC PROVISIONS SECTION Q5.2):
   a. K-AREA: WHEN WELDING IS PERFORMED IN THE K-AREA, THE WEB SHALL BE TESTED FOR CRACKS USING MAGNETIC PARTICLE TESTING.
   b. CJP GROOVE WELDS: ULTRASONIC TESTING SHALL BE PERFORMED FOR CJP GROOVE WELDS IN MATERIALS 5/16" OR THICKER.
   c. BASE METAL THICKER THAN 1 1/2": WHEN CONNECTED BY CJP WELDS TO 3/4" OR THICKER MATERIAL. THE BASE METAL SHALL BE ULTRASONICALLY TESTED FOR DISCONTINUITIES BEHIND AND ADJACENT TO THE WELD FUSION LINE.
   d. BEAM COPE AND ACCESS HOLES IN MATERIAL THICKER THAN 1 1/2": MAGNETIC PARTICLE TESTING IS REQUIRED AT WELDED SPLICES AND CONNECTIONS OF THERMALLY CUT SURFACES OF BEAM COPES AND ACCESS HOLES.
4. OBSERVATION OF BOLTING OPERATIONS SHALL BE PERFORMED IN ACCORDANCE WITH THE SEISMIC PROVISIONS (SECTION Q5.3)
5. THE FOLLOWING ITEMS SHALL BE INSPECTED IN ACCORDANCE WITH THE SEISMIC PROVISIONS (SECTION Q5.4):
   a. PROTECTED ZONES: NO HOLES OR UNAPPROVED ATTACHMENTS.

2 SCBF SLRS NOTES

N.T.S.

NOTE:
1. FOR ITEMS NOT SHOWN OR NOTED, SEE DET. 5/S705

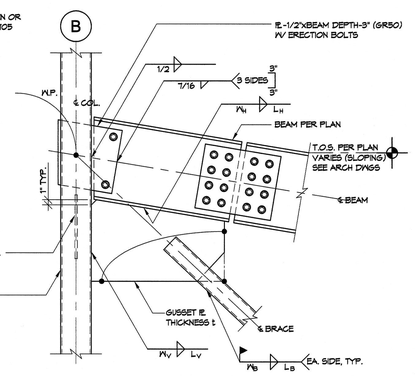

15 GUSSET PLATE DETAIL AT BF-1B

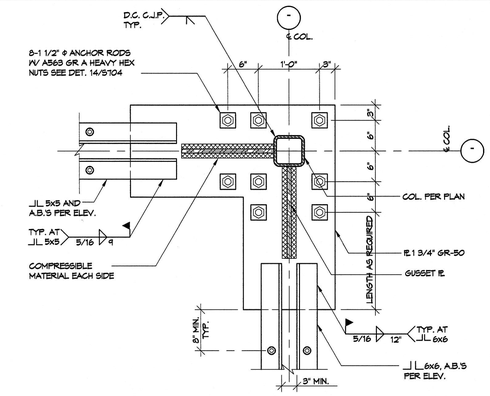

11 BASE PLATE DETAIL

1"=1'-0"

NOTE:
1. FOR ITEMS NOT SHOWN OR NOTED, SEE DET. 5/S705

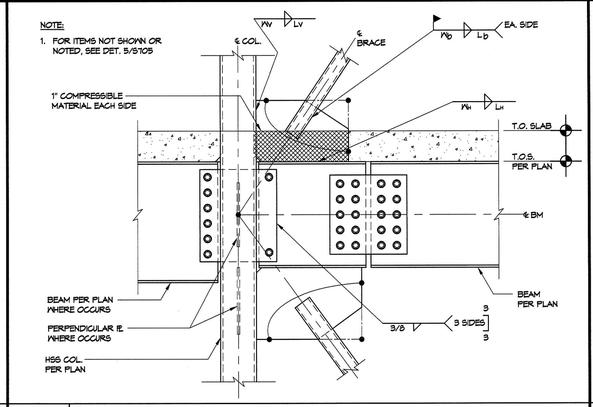

7 TYP. GUSSET PLATE DETAIL AT 2ND FLOOR

1"=1'-0"

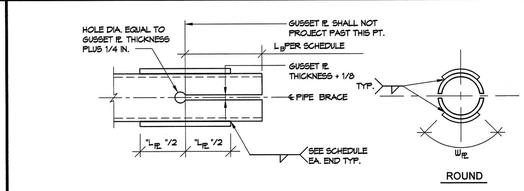

REINFORCING PLATES - ROUND BRACES

BRACE	L_{PL}	W_{PL}	PL SECTION	WELD (1) THICKNESS
2 1/2" STD. PIPE	4"	1"	1/4" BENT PL	1/4"
3" STD. PIPE	5"	2"	1/4" BENT PL	1/4"
4" STD. PIPE	5"	2"	1/4" BENT PL	1/4"
5" STD. PIPE	7"	3"	1/4" BENT PL	1/4"
6" STD. PIPE	7"	3"	1/4" BENT PL	1/4"

NOTE:
1. REFERS TO FILLET WELD WHERE INDICATED ON DETAIL.

3 REINFORCING PLATE SCHEDULE

N.T.S.

NOTE:
1. SEE 5/S705 FOR BRACE WELDING.

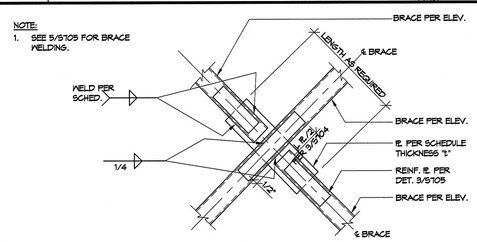

GUSSET PLATE SCHEDULE

BRACE	PLATE	WELD
2 1/2" PIPE	1/4"x8"	3/16 "T"
3" PIPE	1/4"x11"	3/16 "T"
4" PIPE	1/4"x15"	1/4 "T"
5" PIPE	3/8"x14"	5/16 "D"
6" PIPE	3/8"x17 1/2"	3/8 "D"

4 GUSSET PLATE DETAIL (PIPE)

N.T.S.

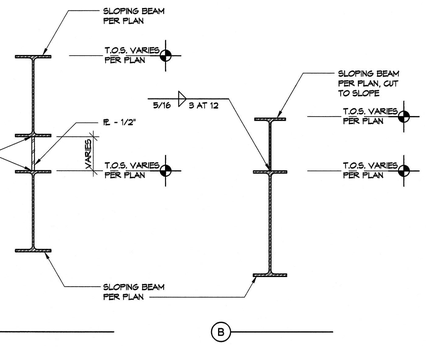

16 ROOF BEAM AT BF-1B

1"=1'-0"

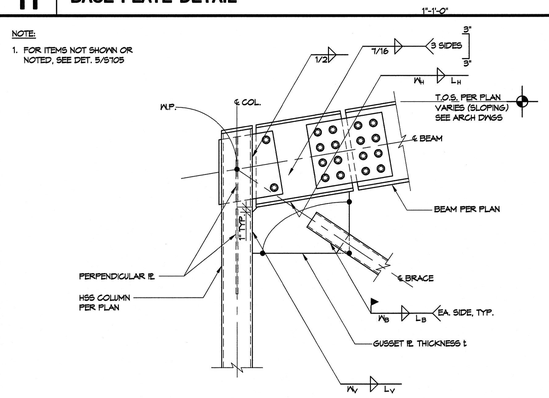

12 GUSSET PLATE DETAIL AT SLOPING ROOF - CORNER CONDITION

1"=1'-0"

NOTE:
1. FOR ITEMS NOT SHOWN OR NOTED, SEE DET. 5/S705

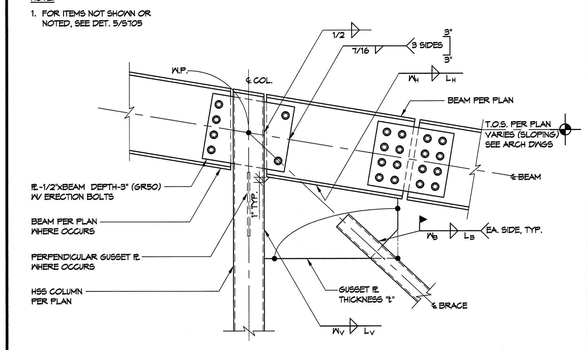

8 GUSSET PLATE DETAIL AT SLOPING ROOF

1"=1'-0"

PIVOT ARCHITECTURE

STRUCTURAL REGISTERED PROFESSIONAL ENGINEER 65387PE OREGON JAN 29, 2013 VICKI H. BOURCIER
Expires: 12-31-17

IBI GROUP

HOHBACH-LEMIN, INC. STRUCTURAL ENGINEERS
259 East 5th Ave. Suite 302
Eugene, OR 97401
(541) 343-3701 Fax (541) 343-1702

BID DOCUMENT SET
EUGENE SCHOOL DISTRICT 4J
120 WEST HILLARD AVENUE, EUGENE OREGON 97404
RIVER ROAD / EL CAMINO DEL RIO ELEMENTARY SCHOOL

STEEL BRACED FRAME DETAILS

PROJECT #:	1337
ISSUE DATE:	02.12.2015
DRAWN:	AMA
CHECKED:	VHB
REVISIONS:	

S705

H-L #9547.2

© 2014 PIVOT ARCHITECTURE

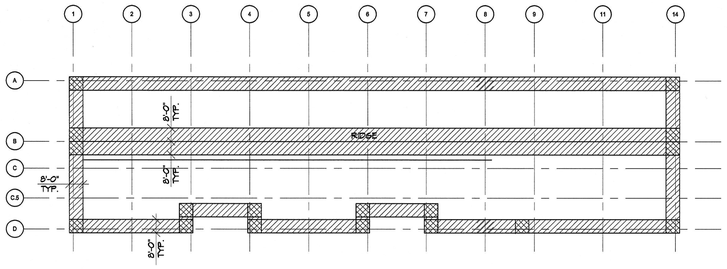

WIND LOADING SCHEDULE (1) (2) (3)				
HATCH	WIND ZONE	P_+ (PSF)	P_- (PSF)	P_{OH} (PSF)
	ZONE 1	18	-36	NA
	ZONE 2	18	-51	-82
	ZONE 3	18	-81	-93

(1) ALL WIND PRESSURES LISTED ARE STRENGTH LEVEL AND SHOULD BE MULTIPLIED BY APPLICABLE LOAD FACTORS WHEN COMBINED W/ ASD LOAD COMBINATIONS.

(2) PLUS AND MINUS SIGNS SIGNIFY PRESSURES ACTING TOWARD AND AWAY FROM THE SURFACES, RESPECTIVELY.

(3) ALL LISTED WIND PRESSURES ARE FOR MEMBERS WITH A MINIMUM SPAN OF 18'-0" FOR MEMBERS SPANNING LESS THAN 18'-0"; THE DESIGN WIND PRESSURE IS HIGHER.

13 WIND LOADING SCHEDULE - SECTOR A & B (HIGH ROOF)

N.T.S.

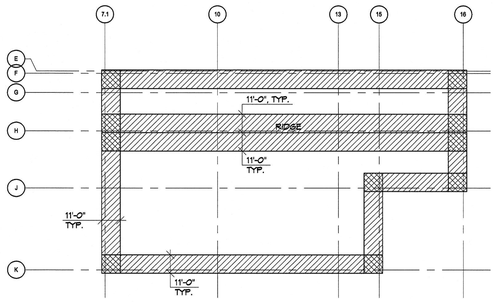

WIND LOADING SCHEDULE (1) (2) (3)				
HATCH	WIND ZONE	P_+ (PSF)	P_- (PSF)	P_{OH} (PSF)
	ZONE 1	18	-36	NA
	ZONE 2	18	-51	-82
	ZONE 3	18	-81	-93

(1) ALL WIND PRESSURES LISTED ARE STRENGTH LEVEL AND SHOULD BE MULTIPLIED BY APPLICABLE LOAD FACTORS WHEN COMBINED W/ ASD LOAD COMBINATIONS.

(2) PLUS AND MINUS SIGNS SIGNIFY PRESSURES ACTING TOWARD AND AWAY FROM THE SURFACES, RESPECTIVELY.

(3) ALL LISTED WIND PRESSURES ARE FOR MEMBERS WITH A MINIMUM SPAN OF 18'-0" FOR MEMBERS SPANNING LESS THAN 18'-0"; THE DESIGN WIND PRESSURE IS HIGHER.

14 WIND LOADING SCHEDULE - SECTOR C

N.T.S.

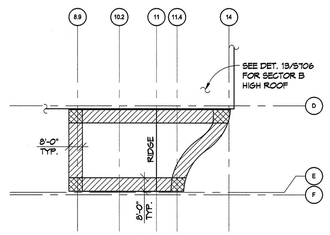

WIND LOADING SCHEDULE (1) (2) (3)				
HATCH	WIND ZONE	P_+ (PSF)	P_- (PSF)	P_{OH} (PSF)
	ZONE 1	16	-40	NA
	ZONE 2	16	-47	-59
	ZONE 3	16	-47	-90

(1) ALL WIND PRESSURES LISTED ARE STRENGTH LEVEL AND SHOULD BE MULTIPLIED BY APPLICABLE LOAD FACTORS WHEN COMBINED W/ ASD LOAD COMBINATIONS.

(2) PLUS AND MINUS SIGNS SIGNIFY PRESSURES ACTING TOWARD AND AWAY FROM THE SURFACES, RESPECTIVELY.

(3) ALL LISTED WIND PRESSURES ARE FOR MEMBERS WITH A MINIMUM SPAN OF 18'-0" FOR MEMBERS SPANNING LESS THAN 18'-0"; THE DESIGN WIND PRESSURE IS HIGHER.

10 WIND LOADING SCHEDULE - SECTOR B (LOW ROOF)

N.T.S.

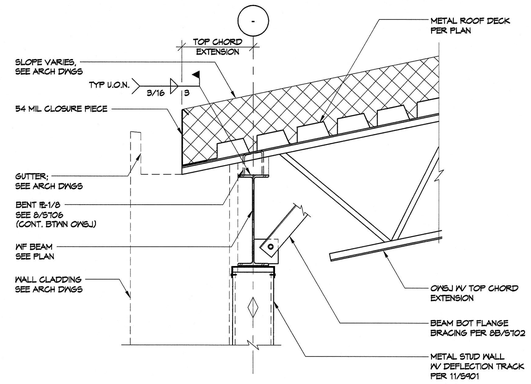

5 OWSJ TO WF BEAM AT EXT. WALL

1"=1'-0"

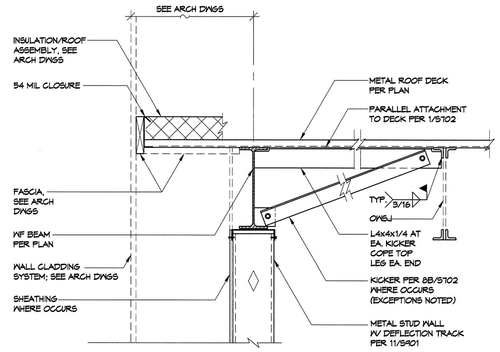

6 GABLED END

1"=1'-0"

1. ALL OPEN WEB JOISTS TO BE SJI-SERIES DESIGNATED ON THE FRAMING PLANS; DESIGNED AND MANUFACTURED IN ACCORDANCE WITH THE STEEL JOIST INSTITUTE SPECIFICATION AND 2014 OSSC SECTION 2205.2.
2. CONSTRUCT AND ERECT OPEN WEB JOISTS (OWSJ) IN SUCH A MANNER AS TO ALIGN WEB OPENINGS IN ADJACENT MEMBERS TO ALLOW PASSAGE OF MECHANICAL DUCT WORK.
3. MAXIMUM DEFLECTIONS SHALL BE LESS THAN., U.O.N. (L=SPAN LENGTH)
   A) L/240 FOR DEAD PLUS SNOW LOADS
   B) L/360 FOR SNOW LOADS ONLY
4. THE TOP CHORD OF ALL OWSJS SHALL HAVE A MINIMUM THICKNESS OF 3/16 INCH.
5. CAMBER ALL OWSJS FOR 40% OF THE CALCULATED DEAD LOAD DEFLECTION
6. GRAVITY LOADS [DEAD AND SNOW (DL,SL)] SHOWN ON THE FRAMING PLANS ARE BASED UPON THE FOLLOWING FLAT LOADS:

LOCATION	DL*	SL	WL***
SECTOR A	22 PSF	22 PSF	13/S706
SECTOR B (HIGH ROOF)	22 PSF	22 PSF	13/S706
SECTOR B (LOW ROOF)	20 PSF	21 PSF	10/S706
SECTOR C (14)	19 PSF**	22 PSF	14/S706

* DL INCLUDES 3 PSF MISC. LOADING AND DOES NOT INCLUDE OWSJ SELF-WEIGHT

** PROVIDE ADD'L 4 PSF (DL) FOR PV PANELS IN SECTOR C, SOUTH OF LINE (J)

*** SEE REFERENCED DETAIL FOR WIND LOADING DIAGRAM AND NOTES

7. ASD LEVEL UNIFORM DEAD AND SNOW LOADS IN POUNDS PER LINEAL FOOT (PLF) ARE INDICATED ON THE ROOF FRAMING PLANS THUS: (DL/SL).
8. SEE DETAIL 4/S706 FOR OWSJ SCISSOR TRUSS PROFILE AT GYM/ CAFETERIA. SEE DETAIL 3/S706 FOR OWSJ PROFILE AT MEDIA CENTER. SEE ARCHITECTURAL BUILDING SECTIONS FOR ALL STANDARD SJI SERIES OWSJ PROFILES.
9. UNLESS OTHERWISE NOTED ON PLAN, THUS: PAXIAL = XX KIPS; ALL OWSJ TO BE DESIGNED FOR THE FOLLOWING STRENGTH LEVEL TOP CHORD AXIAL LOADS:
   SECTORS A & B: K/LH/DLH = 9,000# (SEISMIC); 9,000# (WIND)
   SECTORS C: LH = 7,000# (SEISMIC); 9,000# (WIND)
   DLH = 11,000# (SEISMIC); 10,000# (WIND)
10. ALL OWSJ BOTTOM CHORDS SHALL BE DESIGNED FOR A MINIMUM OF 500# VERTICAL POINT LOAD (WORST CASE LOADING).
11. COORDINATE ACTUAL OWSJ MEMBER LENGTHS WITH THE STRUCTURAL AND ARCHITECTURAL PLANS AND DETAILS.
12. SUBMIT COMPLETE SHOP DRAWINGS AND DESIGN CALCULATIONS PREPARED AND SIGNED BY A STATE OF OREGON REGISTERED PROFESSIONAL OR STRUCTURAL ENGINEER TO THE ARCHITECT AND OBTAIN HIS/HER FINAL REVIEW PRIOR TO COMMENCEMENT OF FABRICATION. THESE DESIGN CALCULATIONS SHALL CLEARLY SHOW ALL APPLIED DEAD, LIVE, SNOW, WIND AND SEISMIC LOADS IN EACH MEMBER DESIGN AS WELL AS MEMBER STRESSES, DEFLECTIONS AND WELDING. DESIGN CALCULATIONS AND SHOP DRAWINGS SHALL ALSO INCLUDE BRIDGING REQUIREMENTS AND SPECIFICATIONS.
13. SEE OTHER DRAWINGS (I.E. MECHANICAL, ARCHITECTURAL, ETC.) FOR ADDITIONAL LOADS TO BE SUPPORTED BY OWSJ MEMBERS.
14. BASKETBALL HOOP DESIGN LOADS TO BE COORDINATED BY THE G.C. DURING SUBMITTAL REVIEW.
15. DESIGN, FABRICATION AND ERECTION SHALL COMPLY WITH THE REQUIREMENTS OF THE AMERICAN INSTITUTE OF STEEL CONSTRUCTION (AISC) AND THE STEEL JOIST INSTITUTE (SJI) "STANDARD SPECIFICATION FOR OPEN WEB JOIST AND OPEN WEB STEEL GIRDERS".

2 OPEN WEB STEEL JOIST (OWSJ) NOTES

NO SCALE

NOTE:
1. FOR ITEMS NOT SHOWN OR NOTED, SEE DET. 5/S705

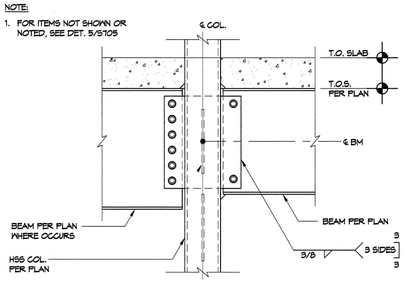

15 COLLECTOR BEAM TO COL AT 2ND FLOOR

1"=1'-0"

NOTE:
1. INTERSECTING WF NOT SHOWN FOR CLARITY.

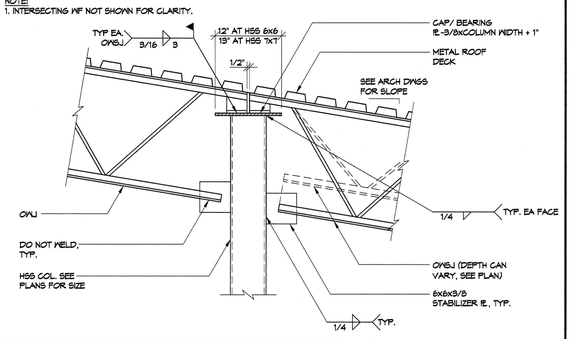

11 OWSJ TO INTERIOR HSS COLUMN

1"=1'-0"

NOTE:
SEE SECTOR B ROOF FRAMING FOR LOCATIONS WHERE 1/4x4x4" LONG FILLET WELD IS REQ'D. NOTED ON PLAN THUS:

BEARING PL - 3/8x4x0'-6" TYPICAL WHERE BEAM FLANGE ≤ 6 1/2", UNLESS OTHERWISE NOTED BELOW

7 OWSJ TO WF BEAM AT CLASSROOM

1"=1'-0"

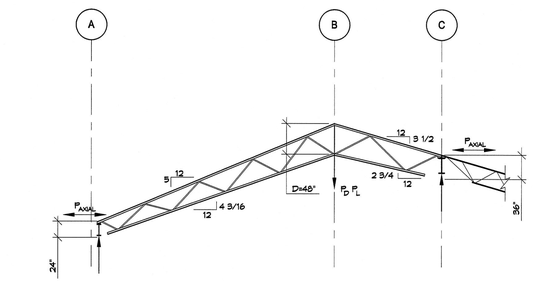

NOTE:
1. P_{AXIAL} (WIND OR SEISMIC) PER DETAIL 2/S706 (NOTE 9) UNLESS OTHERWISE NOTED ON FRAMING PLANS.
2. P_D, P_L DENOTES DEAD AND LIVE LOAD POINT LOADS AS NOTED ON PLAN.

3 OWSJ SCISSOR TRUSS PROFILE AT MEDIA CENTER

1/8"=1'-0"

NOTE:
1. FOR ITEMS NOT SHOWN OR NOTED, SEE 8/S706.

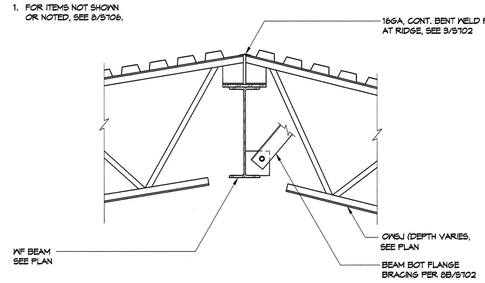

16 OWSJ TO WF RIDGE BEAM

1"=1'-0"

NOTE:
FOR ITEMS NOT SHOWN OR NOTED, SEE 5411/S706

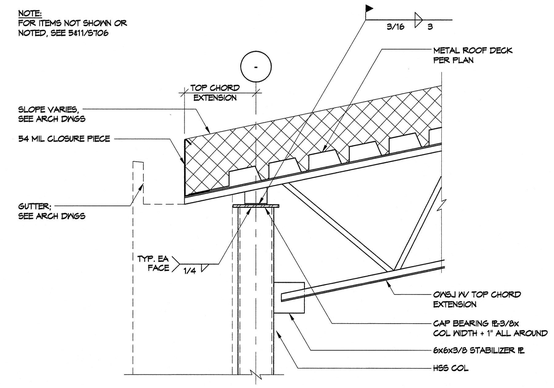

12 OWSJ TO HSS COL AT EXT. WALL

1"=1'-0"

NOTE:
CONN. IS ONE-SIDED AT EXT. WALLS

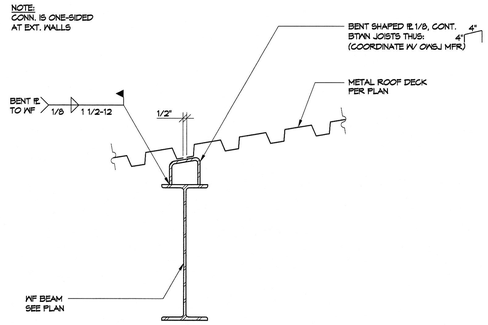

8 BLOCKING AT OWSJ SUPPORT BEAMS-ROOF

1 1/2"=1'-0"

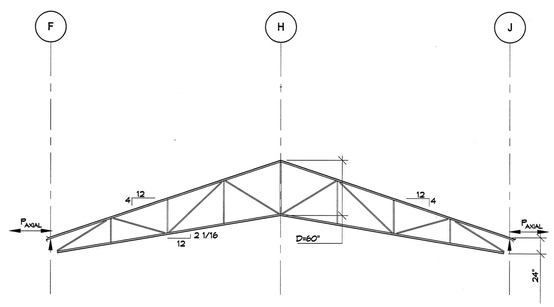

4 OWSJ SCISSOR TRUSS PROFILE AT GYM/CAFETERIA

1/8"=1'-0"

PIVOT ARCHITECTURE

STRUCTURAL REGISTERED PROFESSIONAL ENGINEER 85387PE OREGON JAN 23, 2001 VICKI H. BOURCIER Expires: 12-31-17

IBI GROUP

HOHBACH-LEMIN, INC. STRUCTURAL ENGINEERS 256 East 5th Ave. Eugene, OR 97401 (541) 345-1701 Fax (541) 343-3702 Suite 302

BID DOCUMENT SET

EUGENE SCHOOL DISTRICT 4J
120 WEST HILLIARD AVENUE, EUGENE OREGON 97404

RIVER ROAD / EL CAMINO DEL RIO ELEMENTARY SCHOOL

OWSJ PROFILES

PROJECT #:	1337
ISSUE DATE:	02.12.2016
DRAWN:	AMA
CHECKED:	VHB

REVISIONS:

S706

H-L #9547.2

© 2014 PIVOT ARCHITECTURE

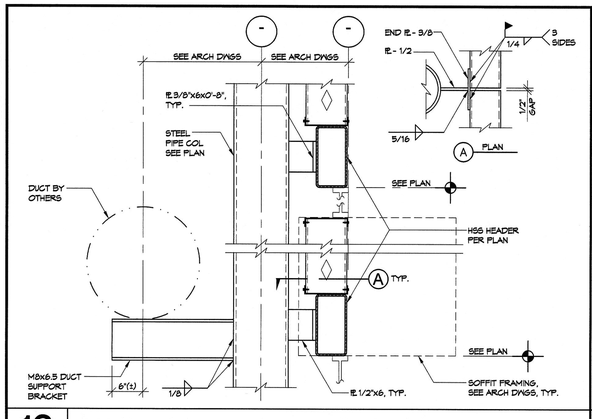

13 SECTION AT MEDIA CENTER WINDOW WALL

1"=1'-0"

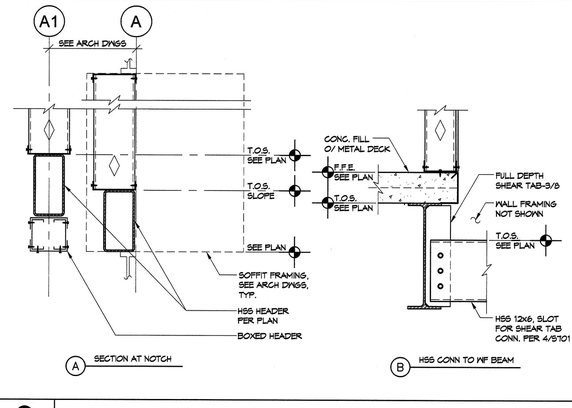

9 SECTION AT MEDIA CENTER WINDOW WALL NOTCH

1"=1'-0"

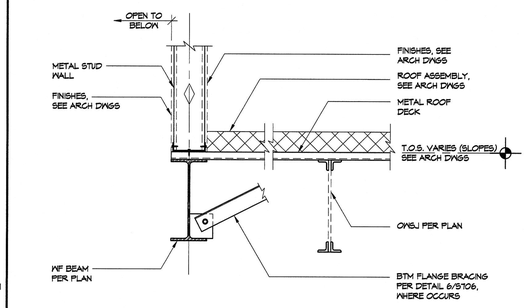

5 SECTION AT LOW ROOF - SECTOR B

1"=1'-0"

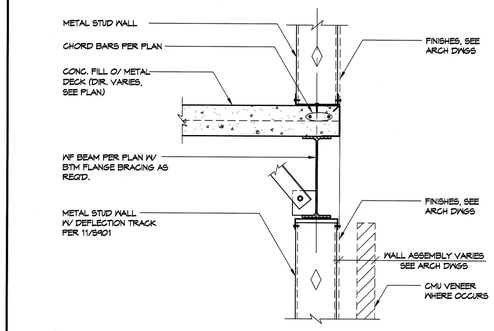

1 2ND FLOOR SECTION AT EXT. WALL

1"=1'-0"

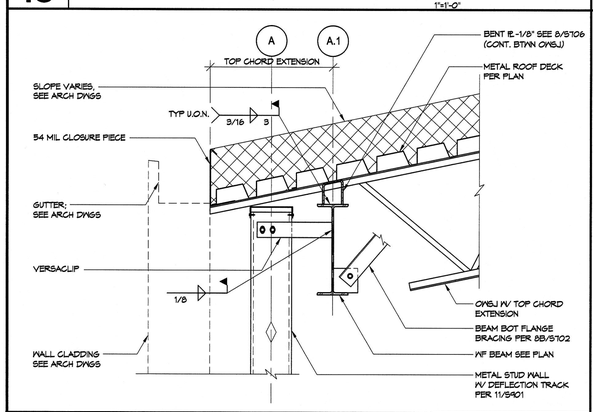

14 OWSJ TO WF BEAM AT MEDIA CENTER

1"=1'-0"

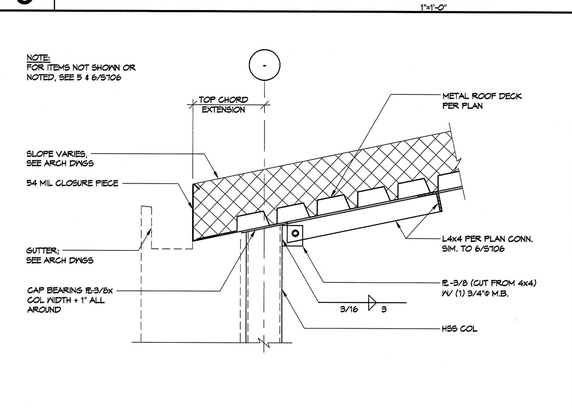

10 OUT-OF-PLANE BRACING OF HSS COLUMN

1"=1'-0"

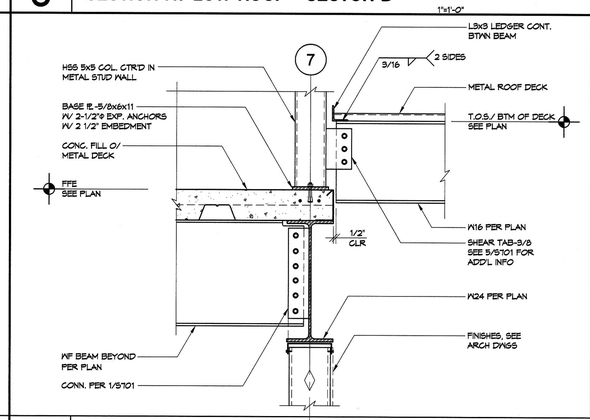

6 2ND FLOOR/LOW ROOF SECTION AT SECTOR B

1"=1'-0"

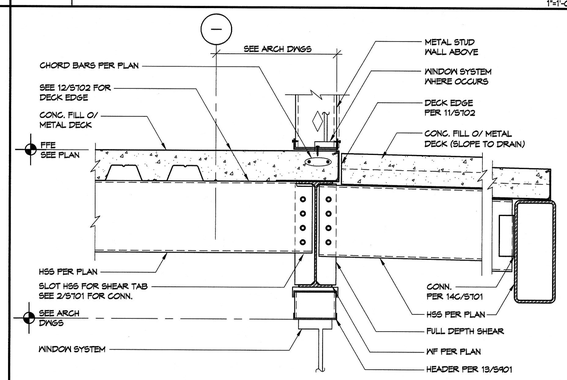

2 SECTION AT BALCONY

1"=1'-0"

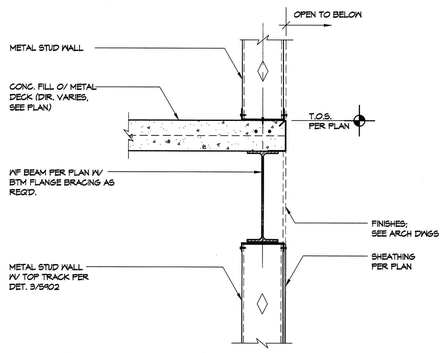

15 SECTION AT MECH. PLATFORM SHEARWALL

1"=1'-0"

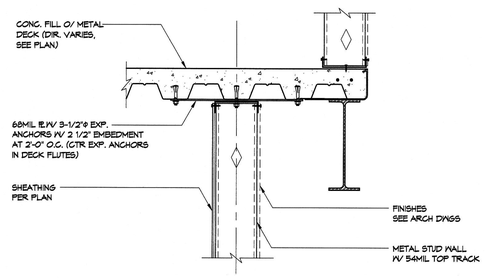

11 SHEARWALL BELOW MECH. PLATFORM

1"=1'-0"

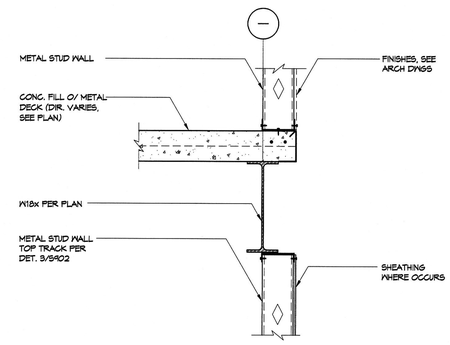

7 SECTION AT MECH. PLATFORM

1"=1'-0"

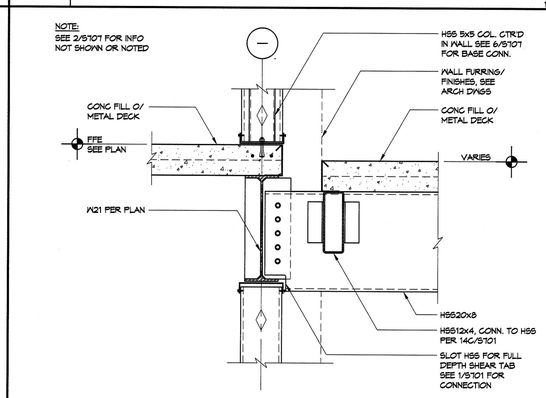

3 SECTION AT BALCONY

1"=1'-0"

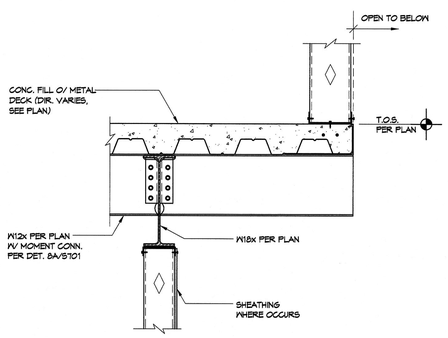

16 DROPPED W18 AT MECH. PLATFORM

1"=1'-0"

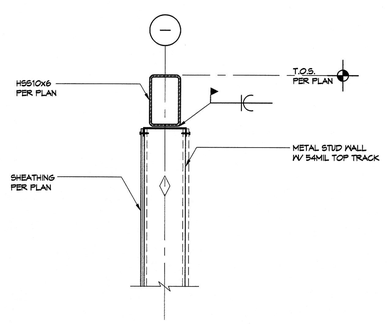

12 SECTION AT TRANSVERSE MECH. PLATFORM SHEARWALL

1"=1'-0"

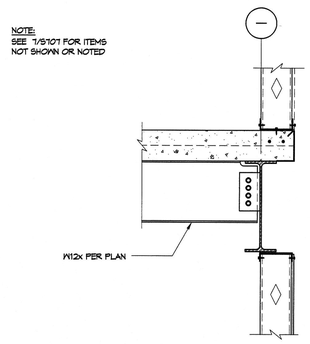

8 WF TO WF CONN. AT MECH. PLATFORM

1"=1'-0"

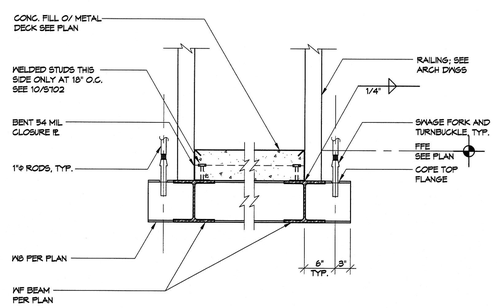

4 SECTION AT BRIDGE

1"=1'-0"

PIVOT ARCHITECTURE

STRUCTURAL ENGINEER REGISTERED PROFESSIONAL ENGINEER 55387PE OREGON JAN 23, 2001 VIKKI H. BOURCIER Expires: 12-31-17

IBI GROUP

HOHBACH-LEWIN, INC. STRUCTURAL ENGINEERS Suite 202 296 East 5th Ave Eugene, OR 97401 (541) 349-1700, Fax (541) 349-1702

BID DOCUMENT SET

EUGENE SCHOOL DISTRICT 4J
120 WEST HILLARD AVENUE, EUGENE OREGON 97404

RIVER ROAD / EL CAMINO DEL RIO ELEMENTARY SCHOOL

STEEL DETAILS SECTORS A AND B

PROJECT #:	1337
ISSUE DATE:	02.12.2016
DRAWN:	AMA
CHECKED:	VHB
REVISIONS:	

S707

H-L #9547.2

© 2014 PIVOT ARCHITECTURE

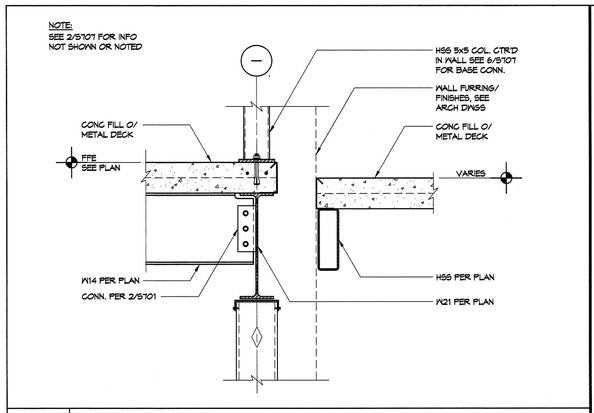

13 SECTION AT BALCONY ROOF SUPPORT COLUMN

1"=1'-0"

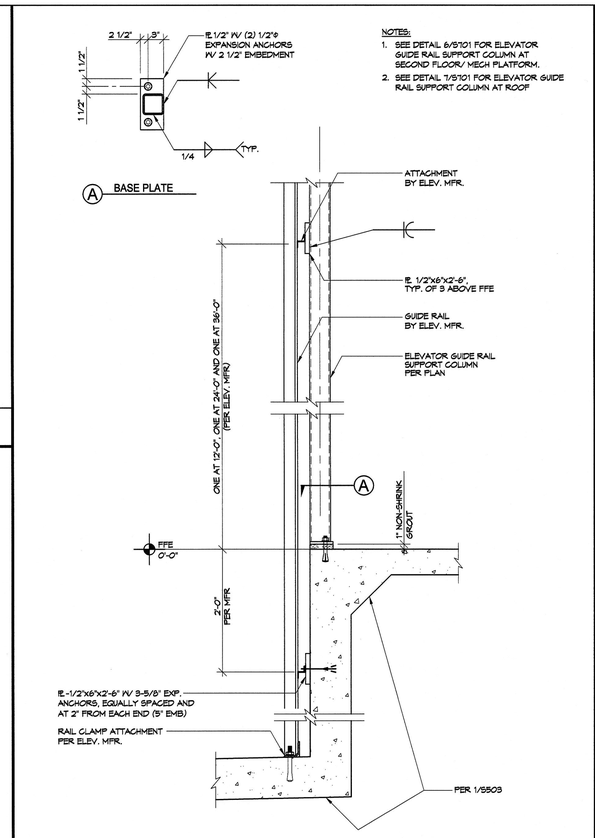

10 ELEVATOR GUIDE RAIL AT FOUNDATION

1"=1'-0"

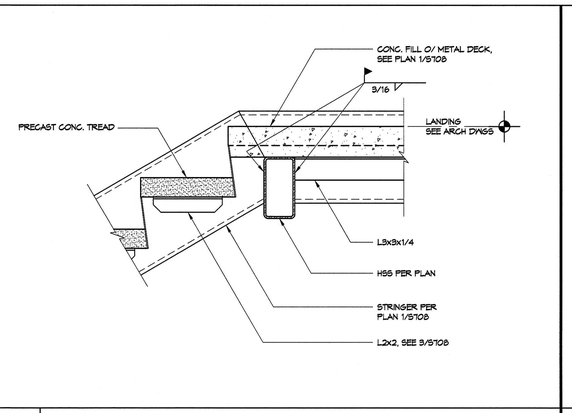

5 STAIR STRINGER AT LANDING

1 1/2"=1'-0"

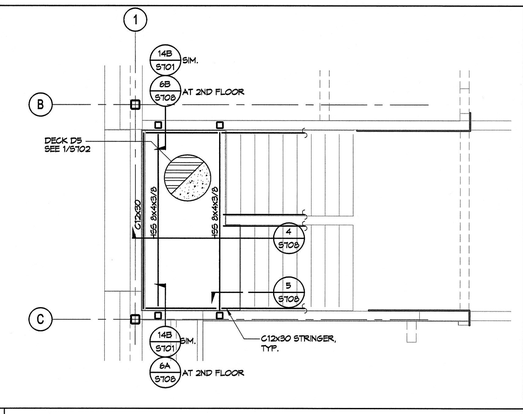

1 TYPICAL STAIR LANDING PLAN - CLASSROOM

1/4"=1'-0"

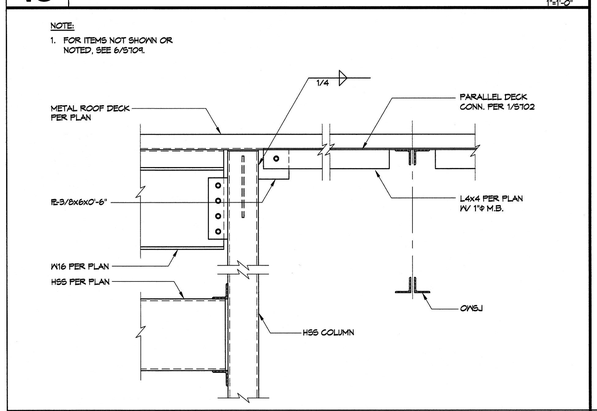

14 ROOF SECTION AT BALCONY

1"=1'-0"

6 HSS COLUMN CONNECTIONS

1"=1'-0"

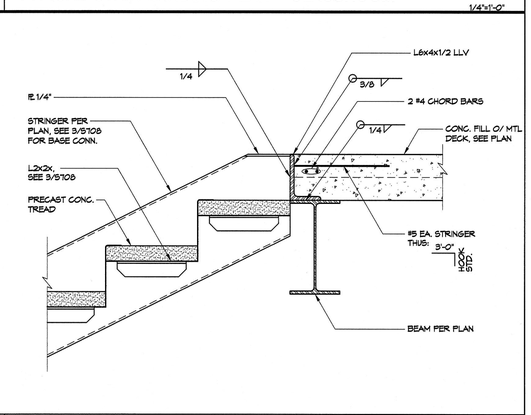

2 TYP. DOWN STAIR STRINGER ATTACHMENT TO STRUCTURE

1 1/2"=1'-0"

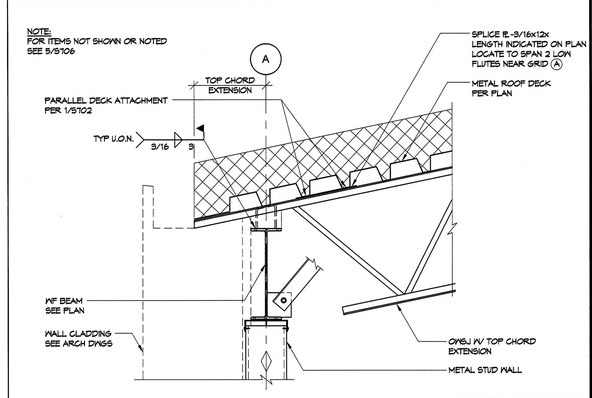

15 OWSJ TO WF BEAM AT EXT. WALL

1"=1'-0"

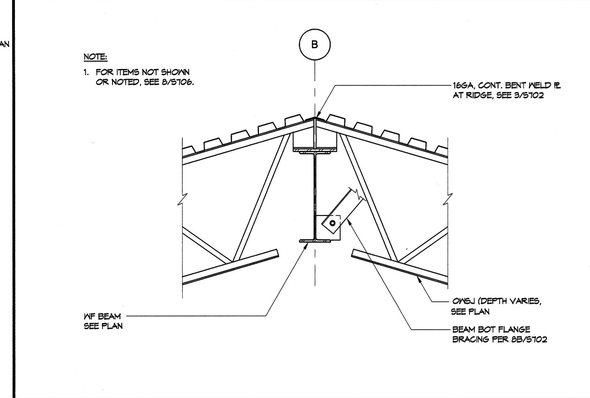

11 OWSJ TO WF RIDGE BEAM AT CLASSROOM

1"=1'-0"

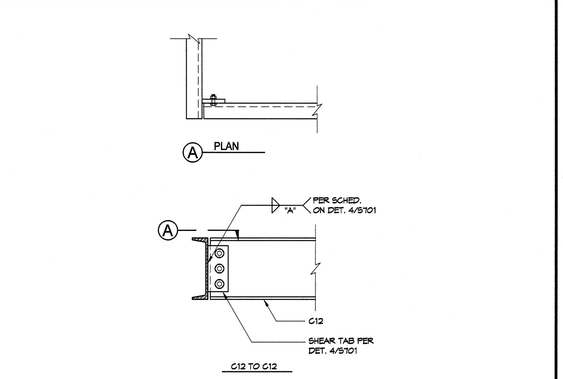

7 C12 CONNECTION

1"=1'-0"

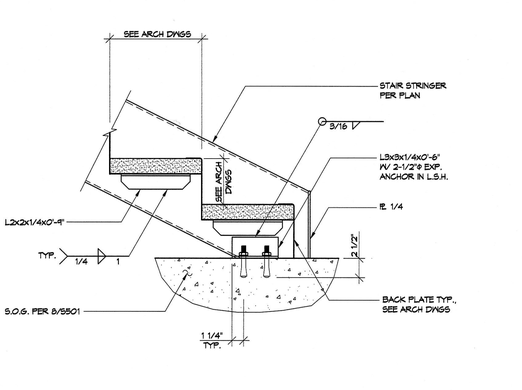

3 TYP. STAIR AT BASE

1 1/2"=1'-0"

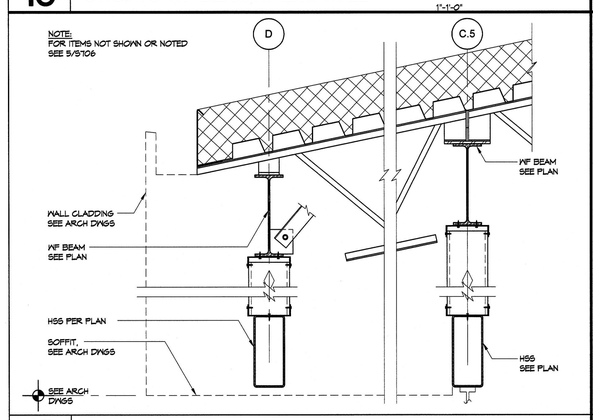

16 SOFFIT OVER BALCONY

1"=1'-0"

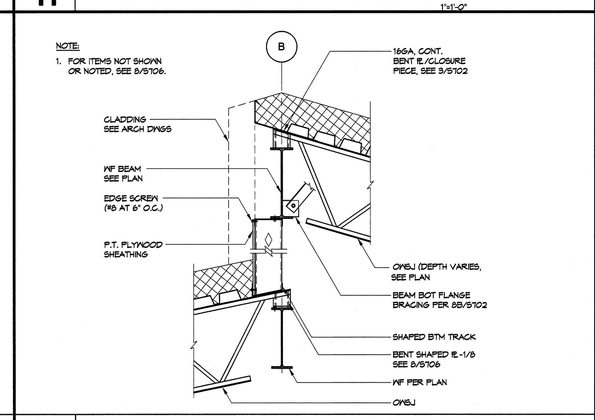

12 SECTION AT ROOF CHANGE - SECTOR C

3/4"=1'-0"

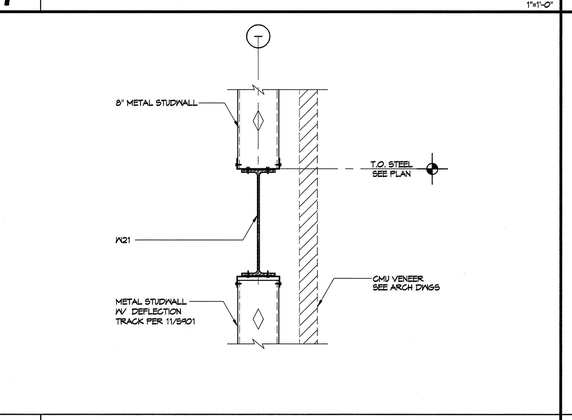

8 BEAM AT FLOOR OPENING

1"=1'-0"

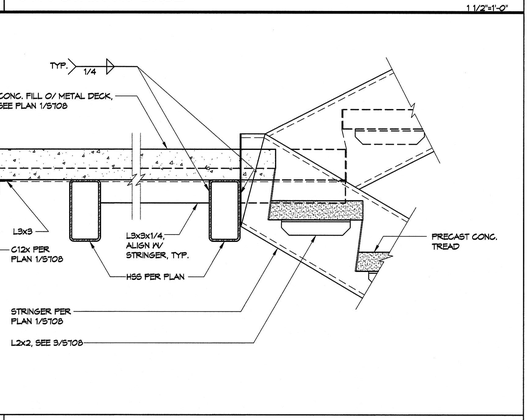

4 INTERIOR STAIR STRINGER AT LANDING

1 1/2"=1'-0"

PIVOT ARCHITECTURE

STRUCTURAL REGISTERED PROFESSIONAL ENGINEER 65387PE OREGON JAN 23, 2001 VIKRAM H. BOURGEOIS Expires: 12-31-17

IBI GROUP

dowa

HOHBACH-LEWIN, INC. STRUCTURAL ENGINEERS
296 East 5th Ave. Eugene, OR 97401
(541) 345-1701 Fax (541) 343-1702 Suite 302

BID DOCUMENT SET

EUGENE SCHOOL DISTRICT 4J
1200 WEST HILLAND AVENUE, EUGENE OREGON 97404

RIVER ROAD / EL CAMINO DEL RIO ELEMENTARY SCHOOL

STEEL DETAILS

PROJECT #:	1337
ISSUE DATE:	02.12.2016
DRAWN:	AMA
CHECKED:	VHB

REVISIONS:

S708

H-L #9547.2

© 2014 PIVOT ARCHITECTURE

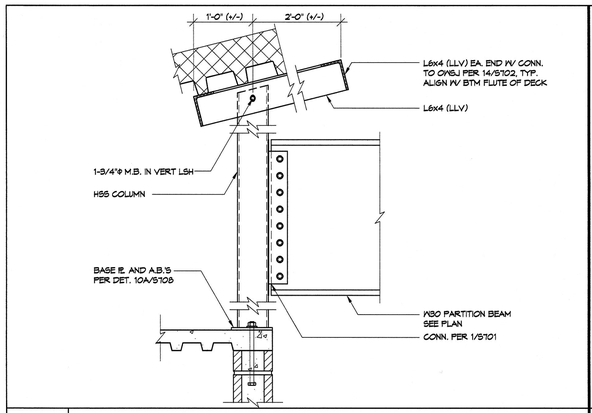

13 PARTITION BEAM CONNECTION TO HSS COLUMN 1"=1'0"

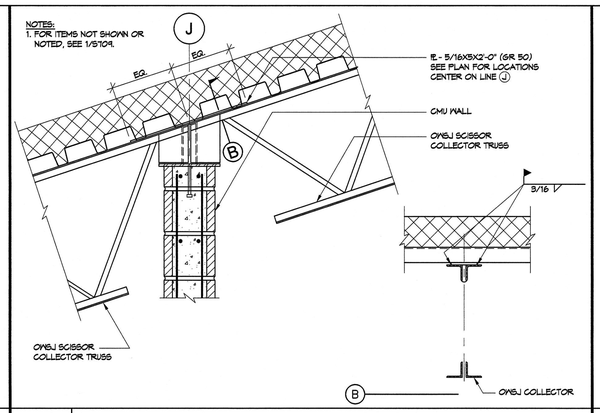

9 OWSJ COLLECTOR SPLICE AT CMU WALL 1"=1'0"

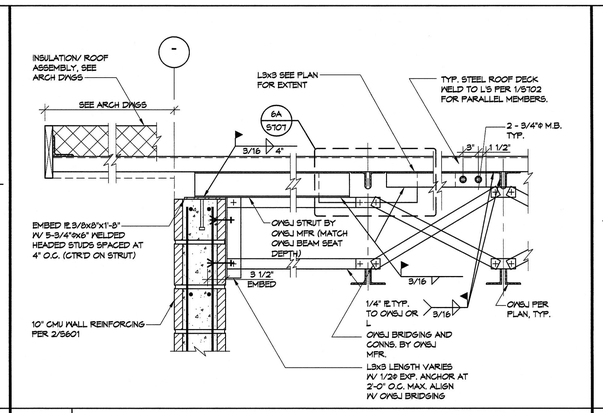

5 ROOF AT GABLED END - SECTOR C 1"=1'-0"

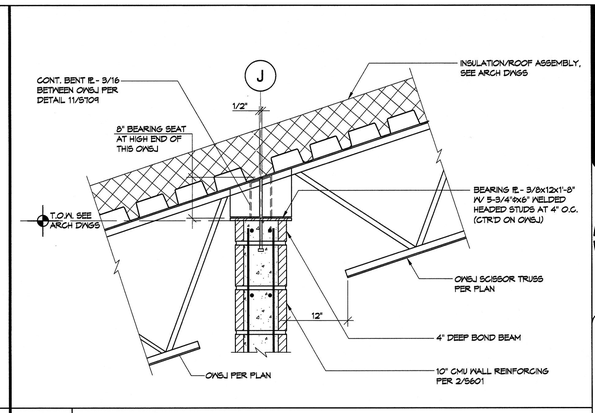

1 OWSJ TO INTERIOR CMU WALL - SECTOR C 1"=1'-0"

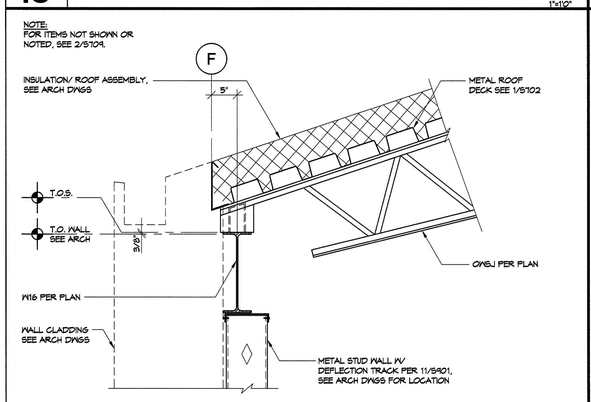

14 OWSJ CONN. AT VESTIBULE - SECTOR C 1"=1'-0"

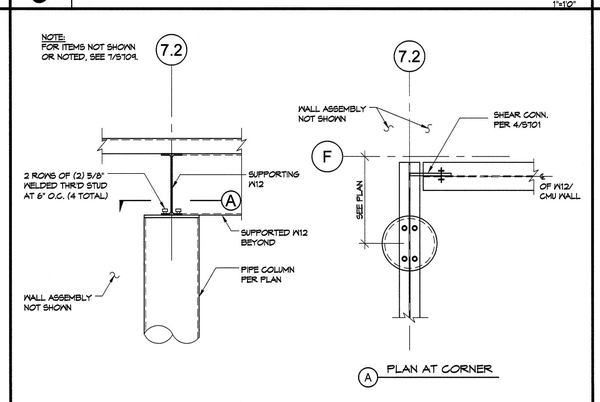

10 NORTHWEST CORNER COLUMN IN CAFETERIA 1"=1'0"

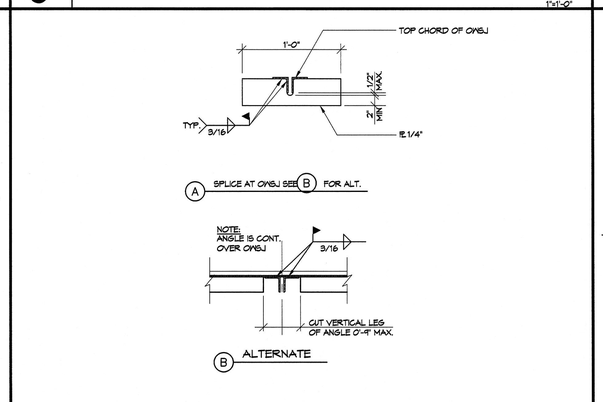

6 STRUT/ANGLE SPLICE AT OWSJ 1"=1'-0"

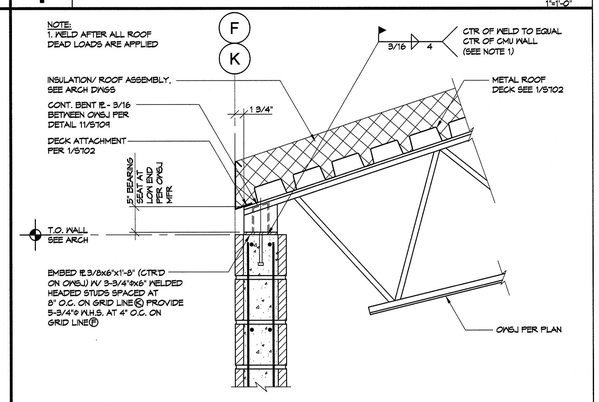

2 OWSJ CONN. AT CMU WALL - SECTOR C 1"=1'-0"

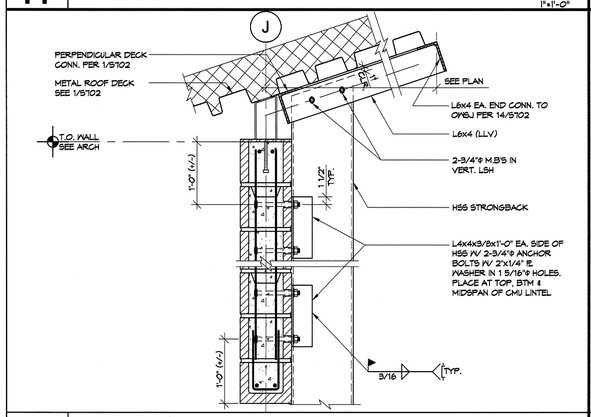

15 HSS STRONG-BACK CONN. AT ROOF 1"=1'-0"

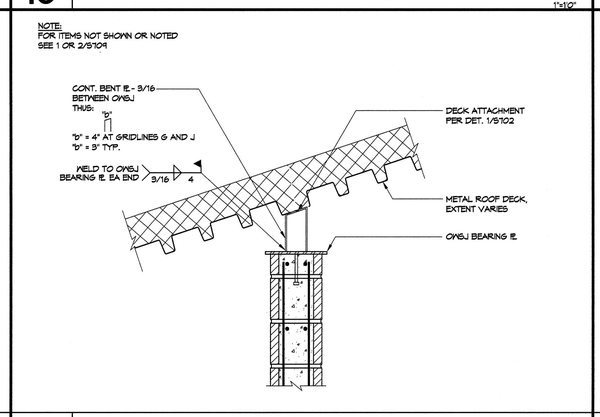

11 BLOCKING BETWEEN OWSJ - SECTOR C 1"=1'-0"

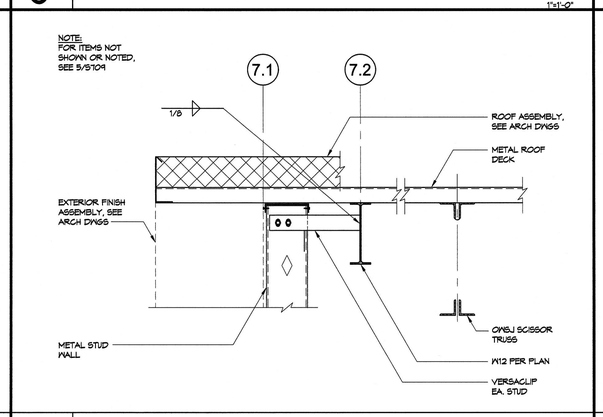

7 ROOF SECTION AT CAFETERIA WEST WALL 1"=1'-0"

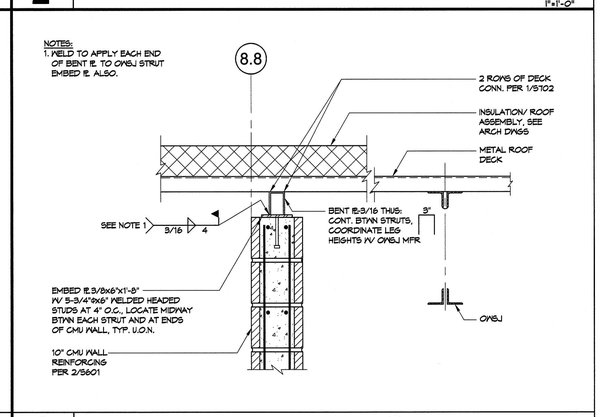

3 TOP OF CMU WALL CONN. AT LINE 8.8 1"=1'-0"

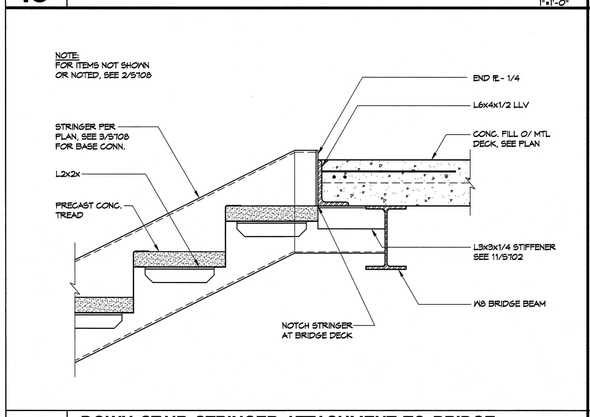

16 DOWN STAIR STRINGER ATTACHMENT TO BRIDGE AT MEDIA CENTER 1 1/2"=1'-0"

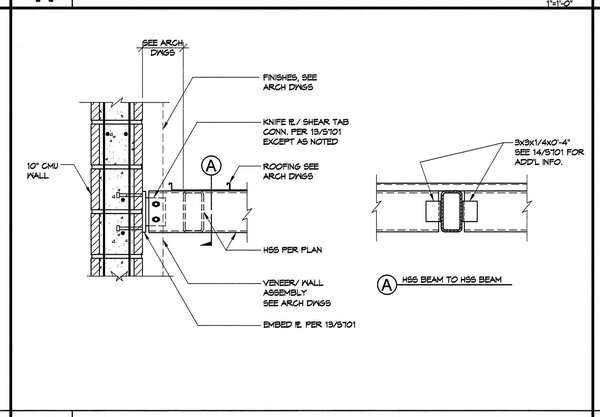

12 SECTOR C SOUTH CANOPY CONNECTION AT BUILDING 1"=1'-0"

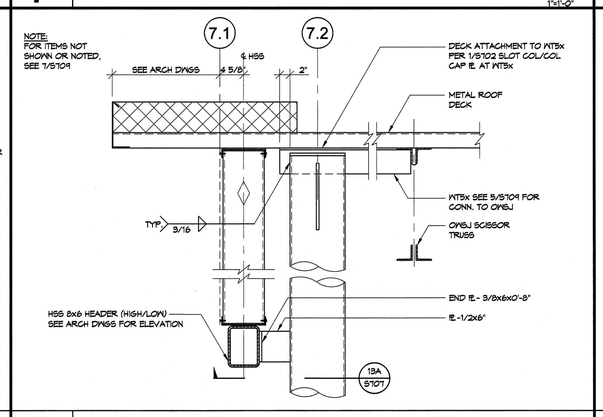

8 SECTION AT PIPE COLUMN - CAFETERIA WEST WALL 1"=1'-0"

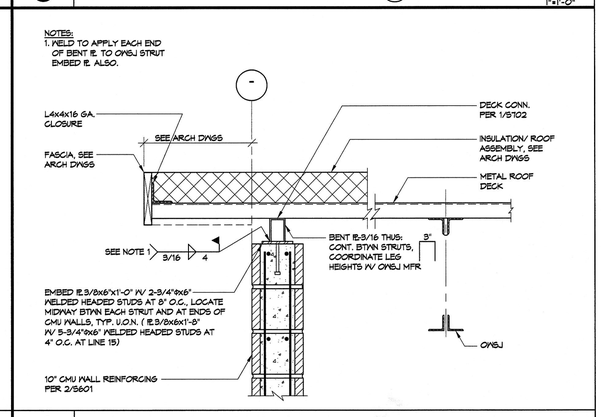

4 ROOF AT GABLED END - SECTOR C 1"=1'-0"

PIVOT ARCHITECTURE

STRUCTURAL REGISTERED PROFESSIONAL ENGINEER 95387PE OREGON JAN 23, 2001 VIKKI H. BOURCIER Expires 12-31-17

IBI GROUP

HOHBACH-LEWIN, INC. STRUCTURAL ENGINEERS 258 East 5th Ave. Eugene, OR 97401 (541) 345-1701 Fax (541) 345-1702 Suite 302

BID DOCUMENT SET

EUGENE SCHOOL DISTRICT 4J
120 WEST HILLARD AVENUE, EUGENE OREGON 97404

RIVER ROAD / EL CAMINO DEL RIO ELEMENTARY SCHOOL

STEEL DETAILS SECTOR C

PROJECT #:	1327
ISSUE DATE:	02.12.2015
DRAWN:	AWA
CHECKED:	VHB

REVISIONS:

S709

H-L #95472

© 2014 PIVOT ARCHITECTURE

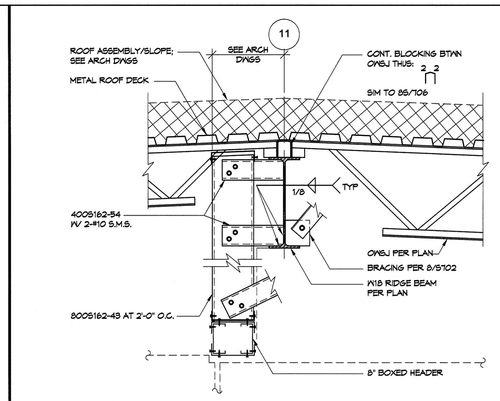

5 ROOF SECTION AT GRIDLINE (11)
1"=1'-0"

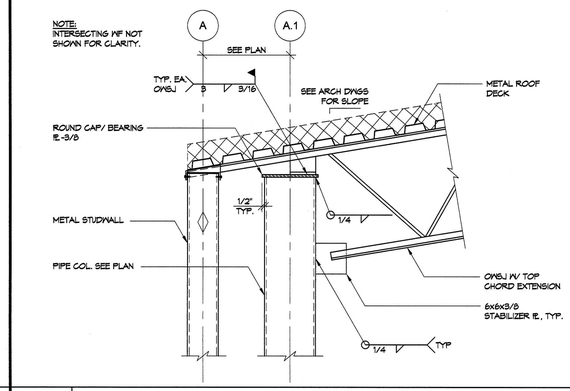

1 OWSJ TO PIPE COLUMN AT MEDIA CENTER
1"=1'-0"

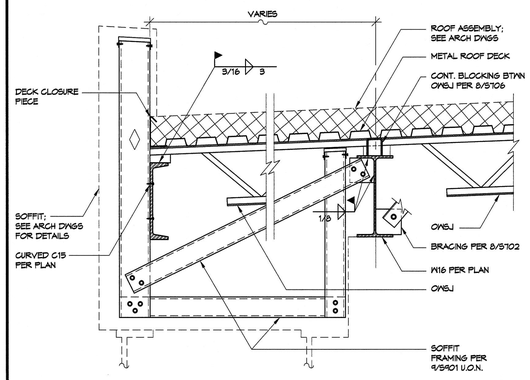

6 ROOF SECTION AT CURVED WALL
1"=1'-0"

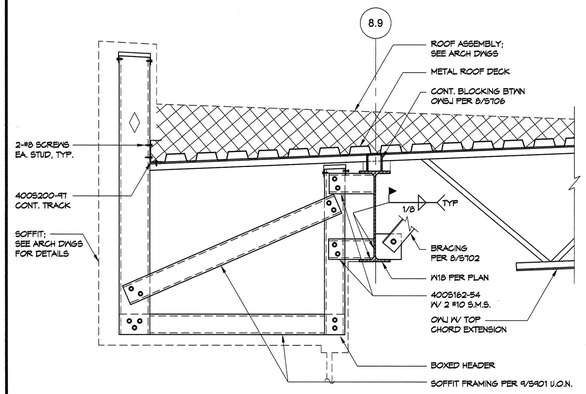

2 ROOF SECTION AT GRIDLINE (8.9)
1"=1'-0"

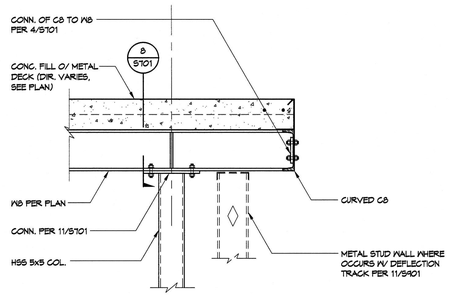

7 2ND FLOOR SECTION AT OBSERVATORY
1"=1'-0"

NOTES:
1. SEE ARCH DWGS FOR EXACT LOCATION OF ROLLING SECURITY GRILL CURTAIN
2. OWJ MFR TO DESIGN FOR AN ADDITIONAL POINT LOAD (P) OF 200# AT ANY POINT ALONG THE SPAN OF BTM CHORD OF OWSJ

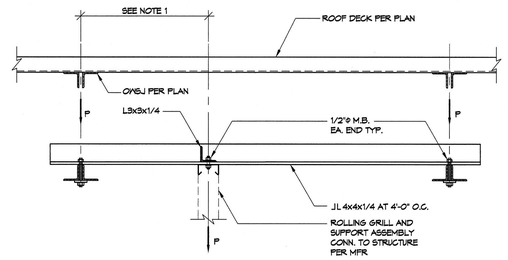

3 ROLLING SECURITY GRILL SUPPORT DETAIL
1"=1'-0"

NOTE:
FOR ITEMS NOT SHOWN OR NOTED SEE 11/S102

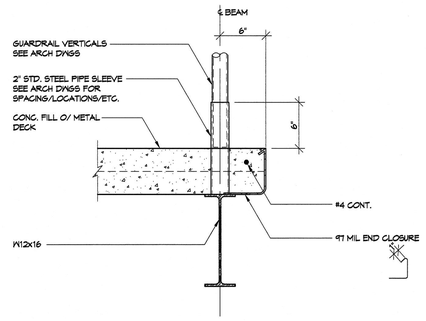

8 EDGE OF DECK AT MECH. LOFT - SECTOR C
1 1/2"=1'-0"

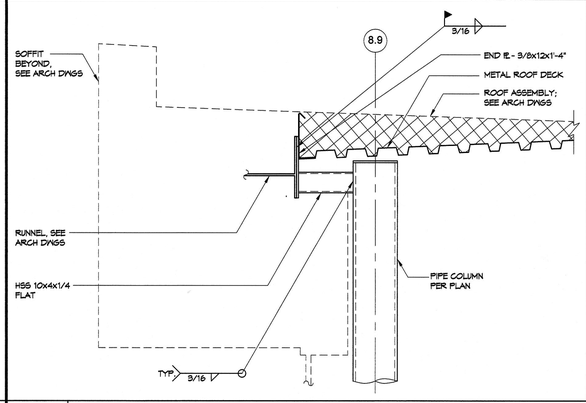

4 ROOF SECTION AT RUNNEL/GRIDLINE (8.9)

PIVOT ARCHITECTURE

STRUCTURAL REGISTERED PROFESSIONAL ENGINEER 85387PE OREGON JAN 23, 2014 VIKRI H. BOURCIER Expires: 12-31-17

IBI GROUP

HOHBACH-LEWIN, INC. STRUCTURAL ENGINEERS
296 East 5th Ave. Eugene, OR 97401
(541) 345-1701 Fax (541) 345-1702 Suite 302

BID DOCUMENT SET

EUGENE SCHOOL DISTRICT 4J
120 WEST HILLIARD AVENUE, EUGENE OREGON 97404
RIVER ROAD / EL CAMINO DEL RIO ELEMENTARY SCHOOL

STEEL DETAILS

PROJECT #:	13317
ISSUE DATE:	02.12.2016
DRAWN:	AMA
CHECKED:	VHB

REVISIONS:

S710

H-L #95472

© 2014 PIVOT ARCHITECTURE

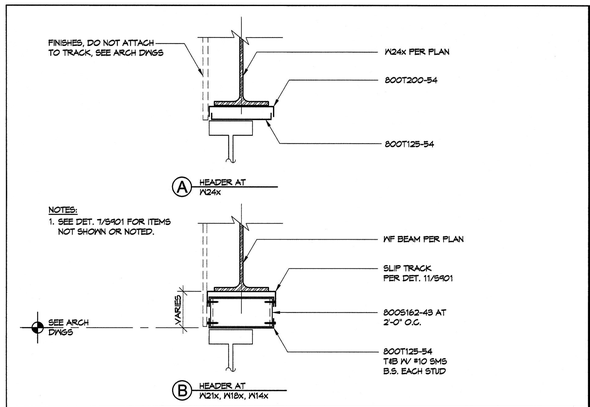

13 HEADERS AT 2ND FLOOR WF BEAM

1 1/2"=1'-0"

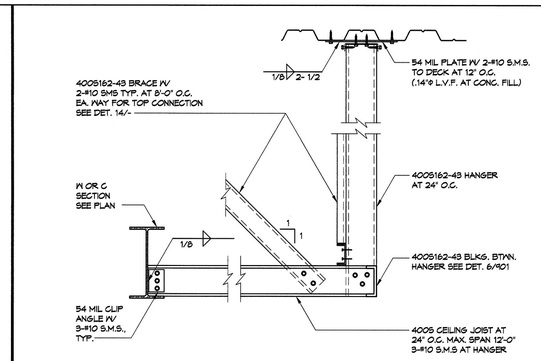

9 METAL STUD SOFFIT FRAMING TYPICAL EXTERNAL BEARING WALL

1"=1'-0"

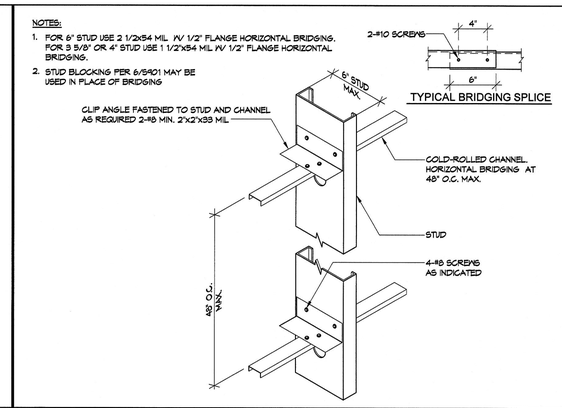

5 TYPICAL BRIDGING

N.T.S.

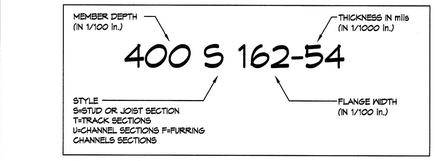

MINIMUM DELIVERABLE THICKNESS (MILS)	GAUGE	DESIGN THICKNESS (INCHES)
18	25	.0188
27	22	.0283
33	20	.0346
43	18	.0451
54	16	.0566
68	14	.0713
97	12	.1017

1 TYPICAL LIGHT GAUGE STUD DESIGNATIONS

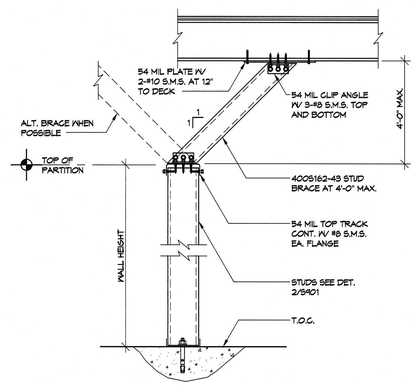

14 TYPICAL PARTITION BRACE

1"=1'-0"

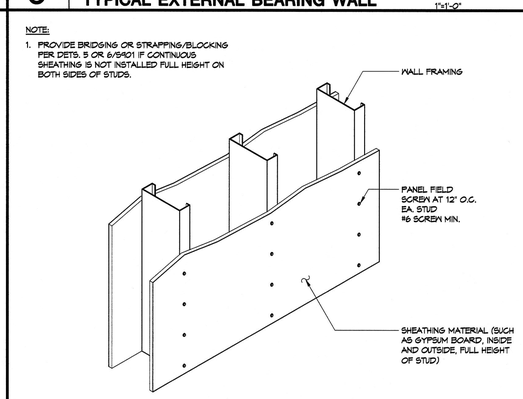

10 TYPICAL STUD BRACING WITH SHEATHING

N.T.S.

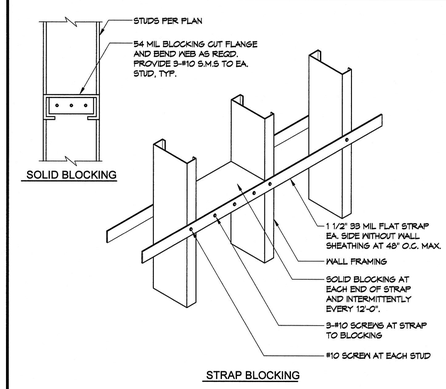

6 TYPICAL STUD BLOCKING

1 1/2"=1'-0"

NOTES:
1. STUDS SHOWN IN THE TABLES ABOVE ARE MINIMUM REQUIRED (SEE NOTE 2 FOR EXCEPTION). SEE ARCHITECTURAL DRAWINGS FOR ADDITIONAL REQUIREMENTS.
2. AT STRUCTURAL SHEARWALLS, PROVIDE 800S162-54 STUDS AT 24" O.C. OR 600S162-54 STUDS AT 24" O.C. WHEN SHOWN ON THE ARCHITECTURAL DRAWINGS AS A 6" WALL.
3. SEE DETAILS 8/S402 AND 9/S902 FOR WALL STUDS AT BRACED FRAMES IN EXTERIOR WALLS.
4. STUS AT 16" O.C. AT CMU VENEER, SEE ARCH DRAWINGS.
5. AT FIRST FLOOR WALLS ONLY, CONTRACTORS OPTION TO USE 1/4"ø EXPANSINO ANCHORS W/ 2 1/2" EMBEDMENT AT 4'-0" O.C.

EXTERIOR WALL STUD - NON BEARING PARTITION

WALL HEIGHT	STUD SECTION (3)	SPACING	1/4"ø TITEN HD BASE (5) TRACK ANCHOR SPACING
∠ 14'	600S162-43	24" O.C. (4)	24" O.C.
14'-20'	600S162-54	24" O.C.	24" O.C.
∠ 26'	600S162-68	16" O.C.	16" O.C.

INTERIOR WALL STUD - NON BEARING PARTITION (2)

WALL HEIGHT	STUD SECTION	SPACING	L.V.F. BASE TRACK ANCHOR SPACING
∠ 14'	362S162-33 600S162-33 800S162-43	24" O.C. 24" O.C. 24" O.C.	24" O.C. 24" O.C. 24" O.C.
14' - 20'	600S162-33 800S162-43	24" O.C. 24" O.C.	16" O.C. 16" O.C.
20' - 26'	600S162-33 800S162-43	16" O.C. 24" O.C.	12" O.C. 12" O.C.

2 STUD SCHEDULE - NON BEARING

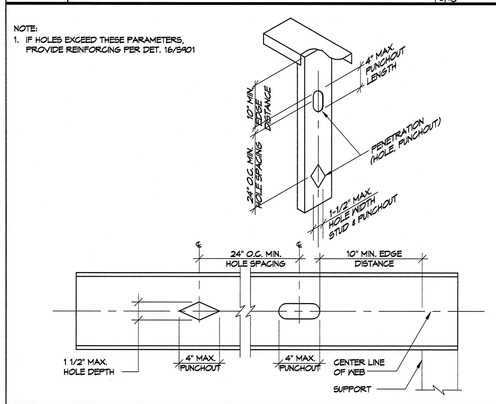

15 TYPICAL ALLOWABLE HOLES IN STUD WEB

N.T.S.

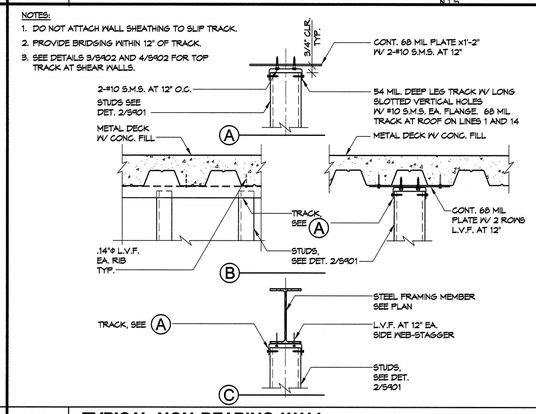

11 TYPICAL NON-BEARING WALL TOP CONNECTION

N.T.S.

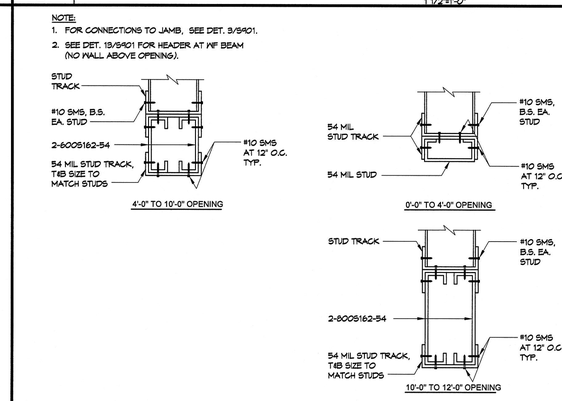

7 TYPICAL HEADER SCHEDULE

N.T.S.

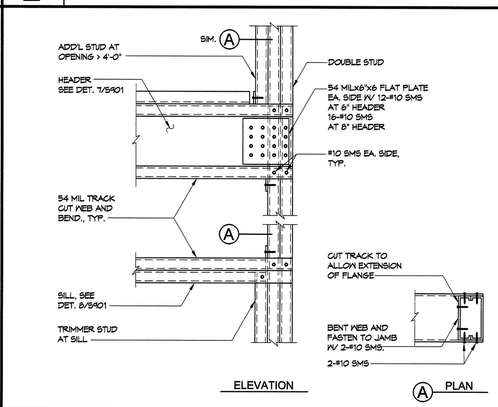

3 TYPICAL HEAD AND SILL DETAILS AT JAMB NON BEARING WALL

1 1/2"=1'-0"

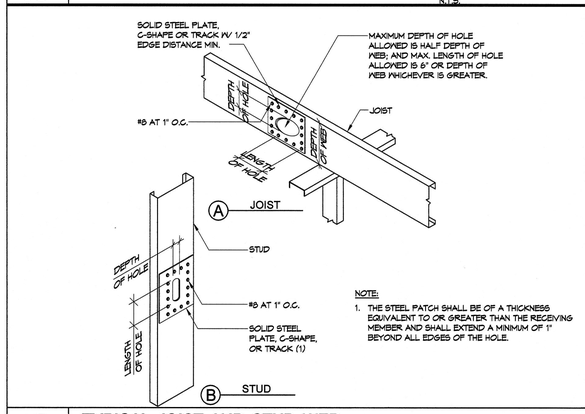

16 TYPICAL JOIST AND STUD WEB HOLES REINFORCING

N.T.S.

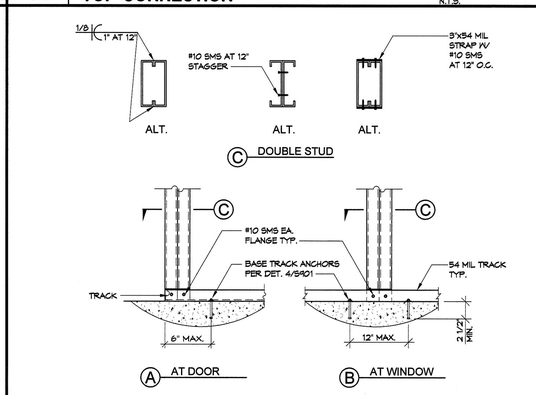

12 TYPICAL DOUBLE STUD JAMB BASE SIMILAR AT TOP

N.T.S.

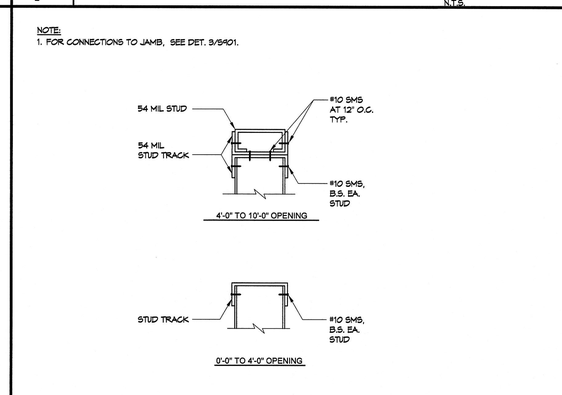

8 TYPICAL SILL SCHEDULE

N.T.S.

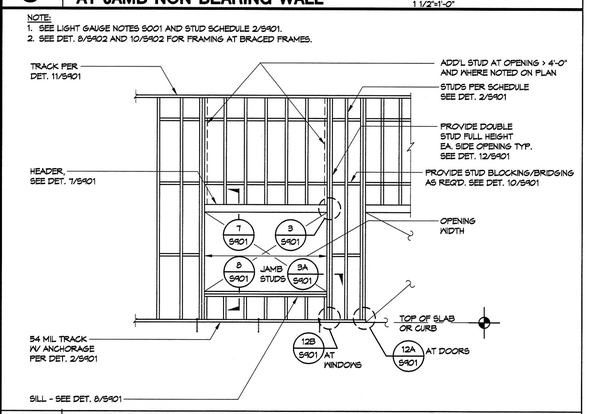

4 TYPICAL LIGHT GAUGE STUD WALL FRAMING - NON BEARING WALL

N.T.S.

PIVOT ARCHITECTURE

STRUCTURAL REGISTERED PROFESSIONAL ENGINEER 65387PE OREGON JAN 23, 2001 VIKRI H. BOURDER Expires: 12-31-17

IBI GROUP

HOHBACH-LEWIN, INC. STRUCTURAL ENGINEERS
296 East 5th Ave. Eugene, OR 97401 (541) 345-1701 Fax (541) 345-1702 Suite 202

BID DOCUMENT SET

EUGENE SCHOOL DISTRICT 4J
120 WEST HILLIARD AVENUE, EUGENE OREGON 97404

RIVER ROAD / EL CAMINO DEL RIO ELEMENTARY SCHOOL

LIGHT GAUGE FRAMING DETAILS

PROJECT #:	1337
ISSUE DATE:	02.12.2016
DRAWN:	AMA
CHECKED:	VHB

REVISIONS:

S901

H-L #9547.2

© 2014 PIVOT ARCHITECTURE

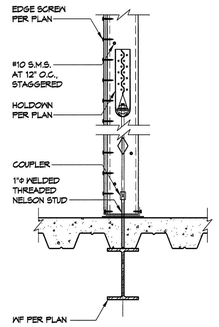

(A) AT SECOND FLOOR

HOLDOWN	MIN. POST SIZE	MIN. A.B. DIA.
S/HD15S	2- 600S250-97 (S)	1"

1. FOLLOW ALL MANUFACTURER'S GUIDELINES NECESSARY TO ACHIEVE FULL ICC DESIGN VALUES.
2. WELD HOLDOWN STUD BACK TO BACK OR STITCH SCREW
3. HOLE THROUGH SILL PLATE AT A.B. SHALL BE A.B. DIA. + 1/4"
4. HOLDOWN SHALL BE INSTALLED TIGHT TO THE HOLDOWN POST WITHOUT FILLERS OR DAPPING. DO NOT BEND HOLDOWN ANCHORS.

13

9 TYPICAL HOLDOWN AT 2ND FLOOR 1"=1'-0"

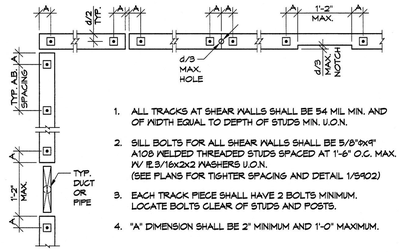

1. ALL TRACKS AT SHEAR WALLS SHALL BE 54 MIL MIN. AND OF WIDTH EQUAL TO DEPTH OF STUDS MIN. U.O.N.
2. SILL BOLTS FOR ALL SHEAR WALLS SHALL BE 5/8"ø x 9" A108 WELDED THREADED STUDS SPACED AT 1'-6" O.C. MAX. W/ IE.3/16x2x2 WASHERS U.O.N. (SEE PLANS FOR TIGHTER SPACING AND DETAIL 1/S902)
3. EACH TRACK PIECE SHALL HAVE 2 BOLTS MINIMUM. LOCATE BOLTS CLEAR OF STUDS AND POSTS.
4. "A" DIMENSION SHALL BE 2" MINIMUM AND 1'-0" MAXIMUM.

5 ANCHOR BOLT AND TRACK REQUIREMENTS N.T.S.

SHEAR WALL SYMBOL, MARK	STUD AND TRACK THICKNESS (MILS)	WELDED THREADED STUDS AT 2ND FLOOR
4	54	5/8"ø AT 1'-6" O.C.
3	54	5/8"ø AT 1'-4" O.C.

NOTES:
1. USE #8 BUGLE HEAD SCREW x1.25 INCHES LONG AT PLYWOOD SHEATHING.
2. (4) NUMBER SHOWN IN SYMBOL REPRESENTS PANEL EDGE SCREW (E.S.) IN INCHES.
3. FOR ADDITIONAL SHEAR WALL FRAMING INFORMATION., SEE DET. 2/S902
4. USE 5/8" PLYWOOD, STRUCT 1 (FIRE-TREATED)
5. SEE 9/S902 OR 4/S902 FOR TOP TRACK ATTACHMENT TO W SECTION
6. SEE 7/S902 FOR STUD ATTACHMENT TO HSS
7. AT SHEAR WALLS IN WEST STAIRWELL, PROVIDE 1/2"ø EXPANSION ANCHORS AT 1'-0" O.C. (W/ 2 1/2" EMBEDMENT)

1 SHEAR WALL SCHEDULE

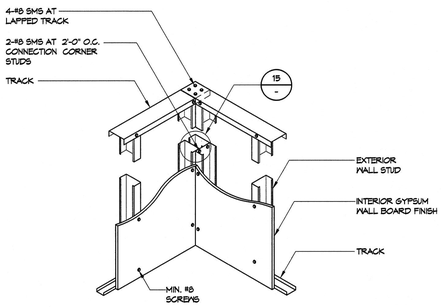

14 TYPICAL CORNER FRAMING N.T.S.

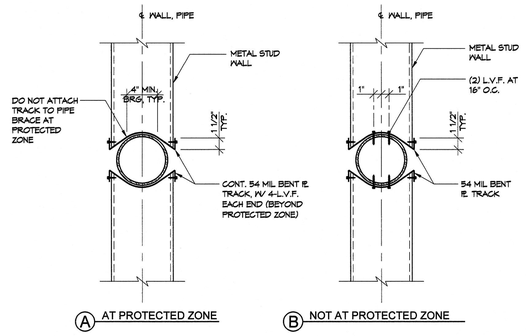

(A) AT PROTECTED ZONE (B) NOT AT PROTECTED ZONE

10 WALL STUD INSTALLATION AT BF BRACES - 6" STD PIPE 1 1/2"=1'-0"

6

NOTES:
1. SEE DETAIL 1/S902 FOR PANEL INFORMATION
2. ATTACH STUDS TO HSS SECTION TYP. PER 7/S902
3. SEE DET. 14/S902 FOR SHEAR WALL CORNER AND INTERSECTION

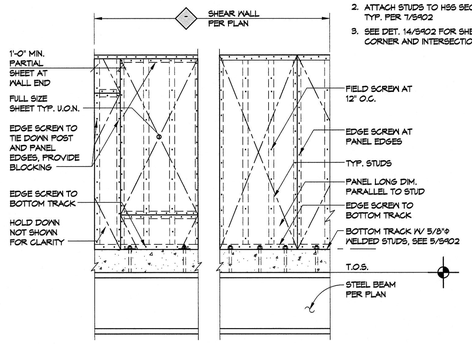

2 TYPICAL SHEAR WALL ELEVATION N.T.S.

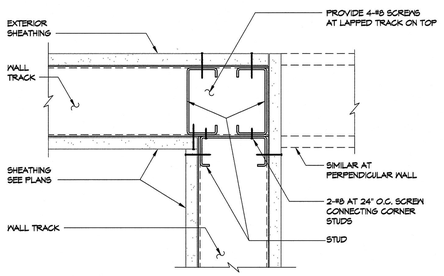

15 TYPICAL CORNER FRAMING N.T.S.

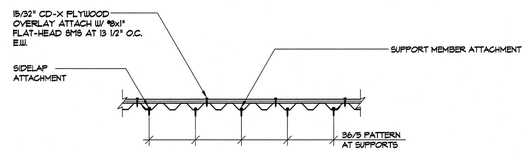

NOTE:
1. UNLESS OTHERWISE NOTED, ATTACHMENT SHALL BE:

	DECK TYPE AND GAGE	SCREW ATTACHMENT		
		AT SUPPORT MEMBERS	AT PARALLEL MEMBERS	AT SIDELAPS
FLOOR	1 5/16" VERCOR DECK-22GA	#12-14x3/4 TEKS 3 AT ALT. FLUTES	#12-14x3/4 TEKS 3 AT 1'-0"O.C.	#12-14x3/4 TEKS 1 AT 24"O.C.

11 PLATFORM FLOOR FRAMING 1"=1'-0"

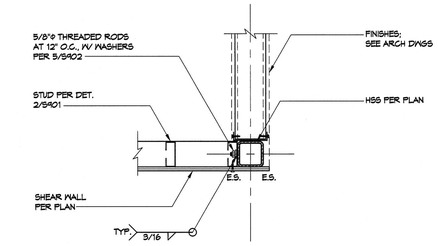

7 SHEAR WALL ATTACHMENT AT HSS COLUMN 1 1/2"=1'-0"

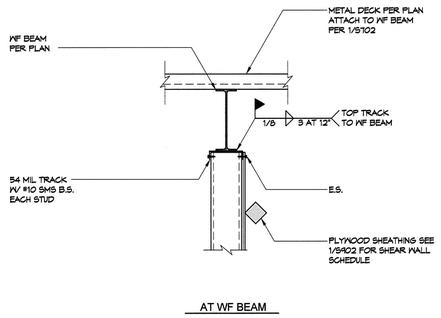

AT WF BEAM

3 TYPICAL INTERIOR SHEAR WALL TOP TRACK CONNECTION 1"=1'-0"

16

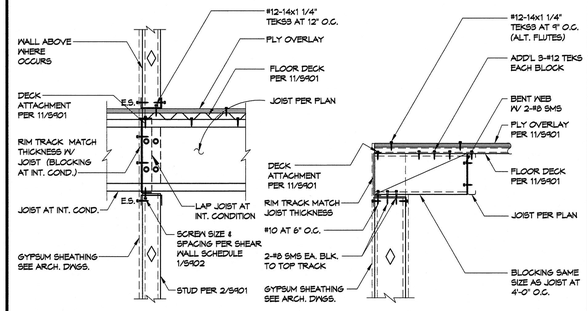

(A) JOIST PERP. TO WALL (B) JOIST PARALLEL TO WALL

12 PLATFORM FLOOR FRAMING DETAILS JOIST PARALLEL/ PERP. TO WALL 1"=1'-0"

NOTES:
SEE DETAIL 10/S902 FOR WALL STUD FRAMING AT 6" STD. PIPE

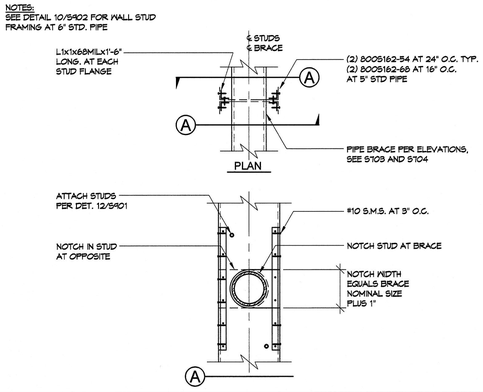

8 WALL STUD INSTALLATION AT BF BRACE ≤ 5" STD. PIPE 1 1/2"=1'-0"

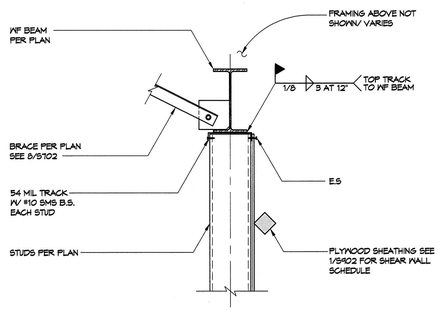

4 SHEARWALL TOP TRACK CONNECTION AT EXTERIOR WALL 1"=1'-0"

PIVOT ARCHITECTURE

STRUCTURAL ENGINEER REGISTERED PROFESSIONAL OREGON 65387PE JAN 29, 2014 MARK H. BOURGER Expires: 12-31-17

IBI GROUP

dowa

HOHBACH-LEWIN, INC. STRUCTURAL ENGINEERS
296 East 5th Ave. Eugene, OR 97401 (541) 343-3701 Fax (541) 343-1702 Suite 302

BID DOCUMENT SET
EUGENE SCHOOL DISTRICT 4J
1200 WEST HILLARD AVENUE, EUGENE OREGON 97404
RIVER ROAD / EL CAMINO DEL RIO ELEMENTARY SCHOOL

LIGHT GAUGE FRAMING DETAILS

PROJECT #:	1337
ISSUE DATE:	02.12.2015
DRAWN:	AMA
CHECKED:	VHB
REVISIONS:	

S902

H-L #6847.2

© 2014 PIVOT ARCHITECTURE

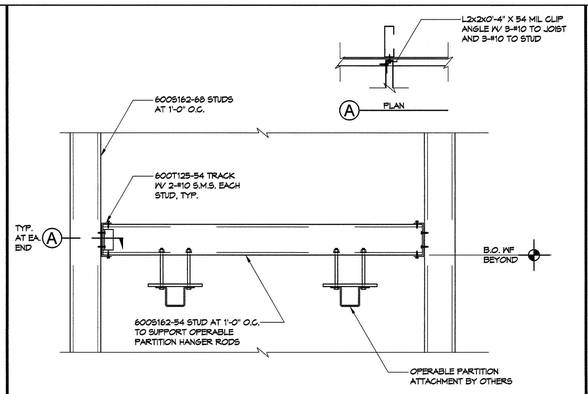

9 PARTITION SUPORT AT STUDWALLS - PROSCENIUM 1"=1'-0"

NOTE:
1. COORDINATE FINAL TOP OF PARTITION BEAM W/ SELECTED OPERABLE PARTITION MFR'S ASSEMBLY PRIOR TO FABRICATION
2. OWJ TO BE DESIGNED FOR THE FOLLOWING ADD'L VERTICAL UNIFORM LOAD APPLIED TO THE OWJ BOTTOM CHORD:
   w_{DL} = 255 plf
   w_{EQ} = 150 plf

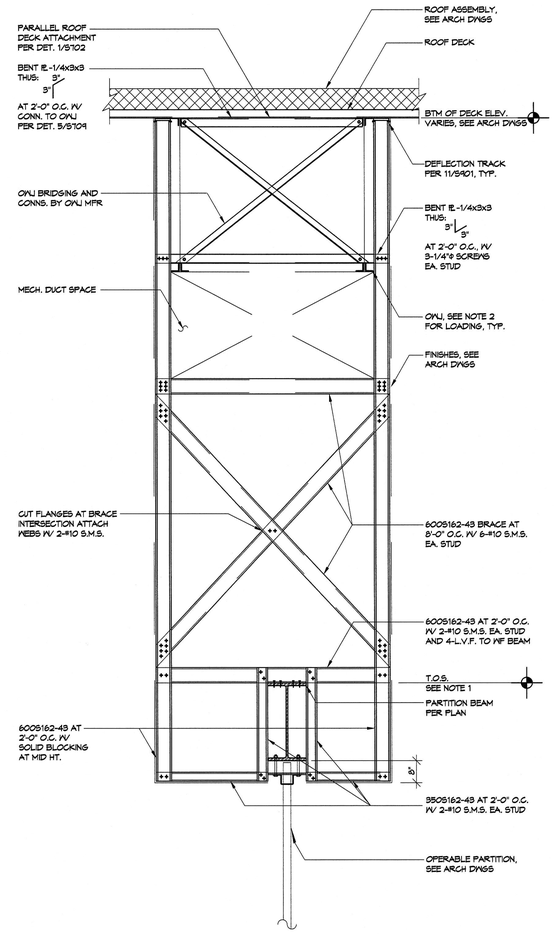

6 PARTITION BEAM SOFFIT FRAMING - GYM/ CAFETERIA 1/2"=1'-0"

NOTE:
1. COORDINATE FINAL TOP OF PARTITION BEAM W/ SELECTED OPERABLE PARTITION MFR'S ASSEMBLY PRIOR TO FABRICATION.
2. ALONG THE LENGTH OF THE PARTITION BEAM, OWJ TO BE DESIGNED FOR THE FOLLLOWING ADD'L VERTICAL UNIFORM LOAD APPLIED TO THE OWJ BOTTOM CHORD:
   w_{DL} = 255 plf
   w_{EQ} = 115 plf

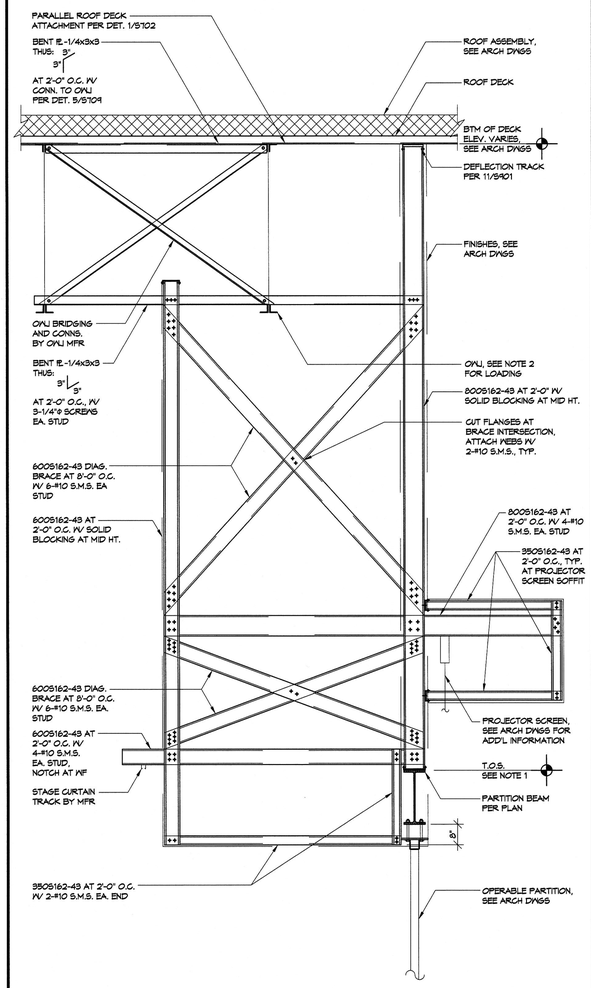

3 PARTITION BEAM SOFFIT FRAMING - PROSCENIUM 1/2"=1'-0"

13 | 9 | 6 | 3

16 | 12 | 8 | 4

PIVOT ARCHITECTURE

REGISTERED PROFESSIONAL ENGINEER STRUCTURAL 65387PE OREGON JAN 23, 2001 VIDAR H. BOLINGER Expires 12-31-17

IBI GROUP

dowa

HOHBACH-LEWIN, INC. STRUCTURAL ENGINEERS
296 East 5th Ave. Suite 302
Eugene, OR 97401
(541) 345-1701 Fax (541) 349-1702

BID DOCUMENT SET

EUGENE SCHOOL DISTRICT 4J
120 WEST HILLYARD AVENUE, EUGENE OREGON 97404

RIVER ROAD / EL CAMINO DEL RIO ELEMENTARY SCHOOL

LIGHT GAUGE FRAMING DETAILS

PROJECT #:	1337
ISSUE DATE:	02.12.2015
DRAWN:	AMA
CHECKED:	VHB
REVISIONS:	

S903

H-L #6647.2

© 2014 PIVOT ARCHITECTURE

STANDARD MECHANICAL ABBREVIATIONS

AF	AIRFOIL	IE	INVERT ELEVATION
AFF	ABOVE FINISHED FLOOR	IN	INCH(ES)
AHP	APPARATUS HOUSING PLENUM	INSUL	INSULATION
ALT	ALTERNATIVE	ISOL	ISOLAT(OR)(ION)
AL	ALUMINUM	KW	KILOWATT
APD	AIR PRESSURE DROP	KWH	KILOWATT HOUR
APPROX	APPROXIMATELY	L	LENGTH
ARCH	ARCHITECT(URAL)	LAT	LEAVING AIR TEMP
AUTO	AUTOMATIC	LB	POUND
BDD	BACKDRAFT DAMPER	LDB	LEAVING DRY BULB
BI	BACKWARD INCLINED	LF	LINEAR FEET
BLDG	BUILDING	LFT	LEAVING FLUID TEMPERATURE
BSMT	BASEMENT	LVG	LEAVING
BTU	BRITISH THERMAL UNIT	LWB	LEAVING WET BULB
BTUH	BRITISH THERMAL UNITS PER HOUR	LWT	LEAVING WATER TEMPERATURE
CFH	CUBIC FEET PER HOUR	MAX	MAXIMUM
CFM	CUBIC FEET PER MINUTE	MBH	THOUSAND BTU PER HOUR
CFS	CUBIC FEET PER SECOND	MECH	MECHANICAL
CLG	CEILING OR COOLING	MFR	MANUFACTURER
CONC	CONCRETE	MIN	MINIMUM
CONN	CONNECT(ION)	MISC	MISCELLANEOUS
CONT	CONTINUE(ED)(UATION)	MTD	MOUNTED
CL	CENTERLINE	NC	NORMALLY CLOSED
DDC	DIRECT DIGITAL CONTROL	NIC	NOT IN CONTRACT
DEFL	DEFLECTION	NO	NORMALLY OPEN
DN	DOWN	OAD	OUTSIDE AIR DAMPER
DP	DEW POINT	OC	ON CENTER DISTANCE
DWDI	DOUBLE WIDTH DOUBLE INLET	OSA	OUTSIDE AIR
DWG	DRAWING	PH	PHASE
EA	EXHAUST AIR	PP	POLYPROPYLENE
EAD	EXHAUST AIR DAMPER	PSI	POUNDS PER SQUARE INCH
EAT	ENTERING AIR TEMPERATURE	PVC	POLYVINYL CHLORIDE
EDB	ENTERING DRY BULB	PVS	PVC COATED STEEL
EFF	EFFICIENCY	R (RAD)	RADIUS
EFT	ENTERING FLUID TEMPERATURE	RA	RETURN AIR
ELEC	ELECTRIC(AL)	RAD	RETURN AIR DAMPER
ELEV	ELEVATION	REV	REVISION
ENGR	ENGINEER	RH	RELATIVE HUMIDITY
EQ	EQUAL	RPM	REVOLUTIONS PER MINUTE
EQUIP	EQUIPMENT	SA	SUPPLY AIR
ESP	EXTERNAL STATIC PRESSURE	SCFM	STANDARD CUBIC FEET PER MINUTE
EWB	ENTERING WET BULB	SD	SMOKE DAMPER
EWT	ENTERING WATER TEMPERATURE	SECT	SECTION
EX	EXTRACTOR	SENS	SENSIBLE
EXH	EXHAUST	SIM	SIMILAR
EXIST	EXISTING	SP	STATIC PRESSURE
EXP	EXPANSION	SPEC	SPECIFICATION
F	DEGREES FAHRENHEIT	SQ	SQUARE
FC	FORWARD CURVED	SF	SQUARE FOOT(FEET)
FIG	FIGURE	SQ IN	SQUARE INCH(ES)
FILT	FILTER	SS	STAINLESS STEEL
FLEX	FLEXIBLE	STL	STEEL
FPD	FLUID PRESSURE DROP	STRUCT	STRUCTUR(E)(AL)
FPM	FEET PER MINUTE	SWP	SINGLE WALL PLENUM
FPS	FEET PER SECOND	SWSI	SINGLE WIDTH SINGLE INLET
FT	FEET/FOOT	TEMP	TEMPERATURE
FTR	FINNED TUBE RADIATOR	TSP	TOTAL STATIC PRESSURE
FU	FIXTURE UNIT	TYP	TYPICAL
FUT	FUTURE	V	VOLTS
FV	FACE VELOCITY	VD	VOLUME DAMPER
GA	GAGE/GAUGE	VEL	VELOCITY
GAL	GALLON	VERT	VERTICAL
GALV	GALVANIZED	VFD	VARIABLE FREQUENCY DRIVE
GLY	GLYCOL	VTR	VENT THROUGH ROOF
GPH	GALLONS PER HOUR	W	WIDTH
GPM	GALLONS PER MINUTE	WG	WATER GAUGE
H	HEIGHT	WPD	WATER PRESSURE DROP
HORIZ	HORIZONTAL	WTD	WATER TEMPERATURE DROP
HP	HORSEPOWER	WTR	WATER TEMPERATURE RISE
HTG	HEATING	W/	WITH
ID	INSIDE(DIAMETER/DIMENSION)	W/O	WITHOUT

DUCT LEGEND

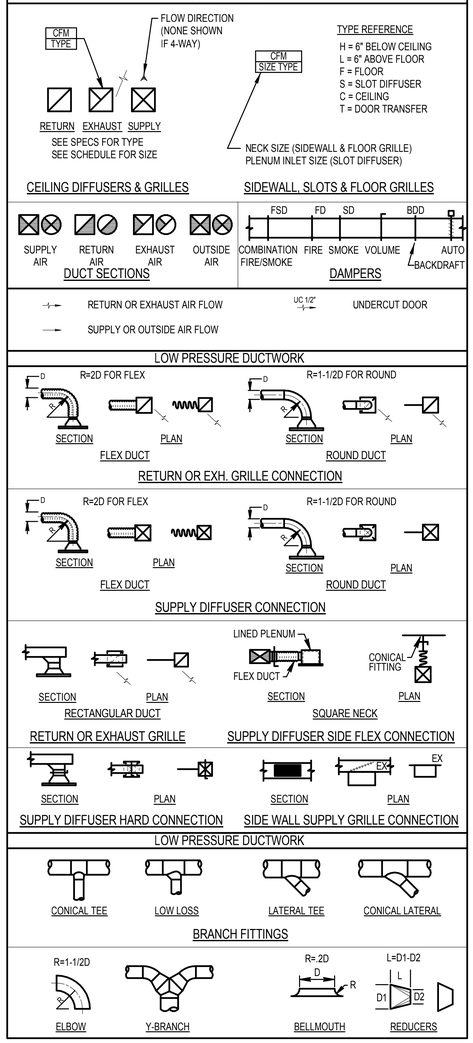

HVAC PIPING

D	D	DRAIN (CONDENSATE/INDIRECT)
PC	PC	PUMPED CONDENSATE
ICW	ICW	INDUSTRIAL COLD WATER (MAKE-UP)
CHWS	CHWS	CHILLED WATER SUPPLY
CHWR	CHWR	CHILLED WATER RETURN
HWS	HWS	HEATING WATER SUPPLY
HWR	HWR	HEATING WATER RETURN
RS	RS	REFRIGERANT SUCTION
RL	RL	REFRIGERANT LIQUID
RHG	RHG	REFRIGERANT HOT GAS
DTS	DTS	DUAL TEMPERATURE SUPPLY
DTR	DTR	DUAL TEMPERATURE RETURN

CONTROL SYMBOLS

	DAMPER WITH OPERATOR
	2-WAY CONTROL VALVE
	3-WAY CONTROL VALVE
DO	DIGITAL OUTPUT FROM DDC PANEL
DI	DIGITAL INPUT TO DDC PANEL
AO	ANALOG OUTPUT FROM DDC PANEL
AI	ANALOG INPUT TO DDC PANEL
DP	DIFFERENTIAL PRESSURE SWITCH
SP	STATIC PRESSURE CONTROLLER
VP	VELOCITY PRESSURE TRANSMITTER
DE	DAMPER END SWITCH
CO	CARBON MONOXIDE SENSOR
CO2	CARBON DIOXIDE SENSOR
AMS	AIR MONITORING STATION
VPP	VELOCITY PRESSURE PROBE
SMK	DUCT SMOKE DETECTOR
WFM	WATER FLOW METER WITH ELECTRONIC TRANSMITTER
PB	PUSH BUTTON SWITCH
P	PRESSURE TRANSMITTER
H	ELECTRONIC HUMIDITY TRANSMITTER
HL	DUCT MOUNTED HIGH LIMIT HUMIDISTAT
T	ELECTRONIC TEMPERATURE SENSOR
FS	FLOW SWITCH
T	ELECTRONIC SENSOR WITH AVERAGING

DUCT DETAILS (LOW VELOCITY)

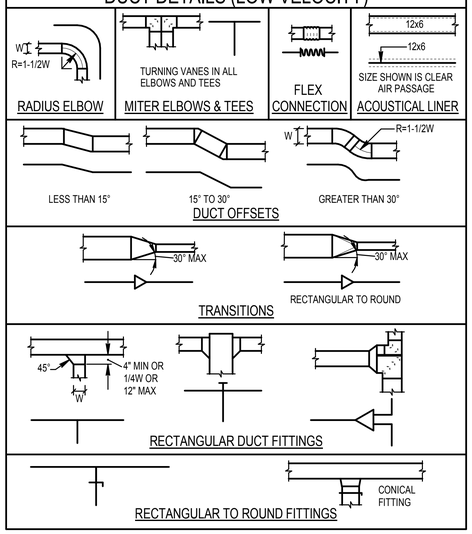

GENERAL NOTE

THIS IS A STANDARD LEGEND SHEET, THEREFORE, SOME SYMBOLS MAY APPEAR ON THIS SHEET THAT DO NOT APPEAR ON THE DRAWINGS.

MISC. VALVES & COCKS

	SHUT-OFF VALVE
	GLOBE VALVE
S	SHUT-OFF VALVE W/ TAMPER SWITCH
	TRIPLE DUTY VALVE
	CHECK VALVE
	2-WAY CONTROL VALVE
	3-WAY CONTROL VALVE
	BALANCING VALVE
FC	FLOW CONTROL VALVE
	SOLENOID VALVE
	PRESSURE REDUCING VALVE
MAV AAV	AIR VENT (MANUAL/AUTOMATIC)
	RELIEF VALVE
	STRAINER
	STRAINER W/ BLOWDOWN
DV	DRAIN VALVE
HB	HOSE BIBB
WH	WALL HYDRANT
S GH	GROUND HYDRANT
F&T/IB	STEAM TRAP
	PRESSURE GAUGE
	PRESSURE/TEMPERATURE TEST PLUG
	THERMOMETER
F	FLOW SWITCH
T	TEMPERATURE TRANSMITTER
S (SIZE)	SHOCK ARRESTOR
V	VACUUM BREAKER
WFM	WATER FLOW METER
RPBA	REDUCED PRESSURE BACKFLOW ASSEMBLY
DCVA	DOUBLE CHECK VALVE ASSEMBLY
DCDA	DOUBLE CHECK DETECTOR ASSEMBLY
BWV	BACKWATER VALVE
UG	UNDERGROUND GATE VALVE W/BOX
PIV	UNDERGROUND GATE W/POST INDICATOR
	OUTSIDE SCREW & YOKE
	Y PATTERN BOILER BLOWDOWN VALVE
	NON-RETURN STOP VALVE
	QUICK OPENING BOILER BLOWDOWN VALVE

MISC. FITTINGS & SYMBOLS

	DIRECTION OF FLOW
	DIRECTION OF SLOPE
	PIPE SLEEVE
	REDUCER
	ANCHOR
	ELBOW (90°)
	ELBOW (45°)
	TEE
	CROSS
	PIPING CONNECTIONS
	JOINT OR COUPLING POINT
	UNION
	FLANGED CONNECTION
	CAP
	PLUG OR BLIND FLANGE
	RISER
	ELBOW UP
	ELBOW DOWN
	TEE UP
	TEE DOWN
	HORIZONTAL TEE
FCX	FLEXIBLE CONNECTION
	BALL JOINT
MC	MECHANICAL COUPLING

SYMBOLS

A ACCESS PANEL	1 NOTE
B BELOW GRADE / FLOOR	

CALL OUT SYMBOLS

WALL MOUNTED PENDANT MOUNTED TEMPERATURE	CO2 CO2 CARBON DIOXIDE T CO2 T CO2 COMBINATION TEMPERATURE & CARBON DIOXIDE SENSOR

ROOM SENSORS

PIVOT ARCHITECTURE

REGISTERED PROFESSIONAL ENGINEER 18329PE OREGON March 19, 1986 NICHOLAS P. COLLINS

EXPIRES 12-31-17

IBI GROUP

PAE Portland | San Francisco | Seattle pae-engineers.com

BID SET

EUGENE SCHOOL DISTRICT 4J
120 WEST HILLYARD AVENUE, EUGENE, OREGON 97404
RIVER ROAD / EL CAMINO DEL RIO ELEMENTARY SCHOOL

SYMBOLS, LEGENDS AND ABBREVIATIONS - MECHANICAL

PROJECT #	1337.00	REVISIONS
ISSUE DATE:	2.12.2016	
DRAWN:	SC	
CHECKED:	PNC	

M001

PRINTED ON: 2/11/2016 4:12:14 PM FROM FILE: C:\Revit Local Files\13-1533 MEP15\13-1533 MEP15_karol.kluczynski.rvt

© 2014 PIVOT ARCHITECTURE

DESIGN CONDITIONS - EUGENE, OR

SPACE	WINTER		SUMMER	
	TEMPERATURE	HUMIDITY	TEMPERATURE	HUMIDITY
OUTDOOR	23.4˚ F DB	16.1˚ F DP / 12.6 HR / 26.9 ˚ F MCDB	91.7˚ F DB / 66.5˚ F MCWB	62.2˚ F DP / 84.8 HR / 74.6˚ F MCDB
INDOOR	70˚ F ± 2˚ F DB	50% RH MAX, NO MINIMUM	75˚ F ± 2˚ F DB	50% RH MAX, NO MINIMUM

GENERAL NOTES:
1. OUTDOOR CONDITIONS BASED ON ASHRAE FUNDAMENTALS 2013 99.6% AND 0.4% DATA.

CONDENSING UNIT SCHEDULE

TAG NUMBER	LOCATION	MATCHING INDOOR UNIT	CAPACITY (MBH)	TYPE	VOLT/ PHASE	AMBIENT TEMP (F)	MCA	COMP FLA	MANUFACTURER & MODEL	NOTES
ACCU-IDF	MECH A300	FCU-IDF	24	DX	208/1	95	13.6	0.70	CARRIER 24ACB7-024	1
ACCU-MDF	MECH B300	FCU-MDF	36	DX	208/1	95	22.1	1.20	CARRIER 24ACB7-036	1
ACCU-ELEC	UTILITY YARD	FCU-ELEC	24	DX	208/1	95	13.6	0.70	CARRIER 24ACB7-024	

NOTES:
1. OUTDOOR UNITS INTALLED IN MECHANICAL EQUIPMENT PLATFORMS.

BOILER SCHEDULE

TAG NUMBER	LOCATION	SERVICE	TYPE	FUEL: TYPE	FUEL: INPUT CAPACITY (MBH)	FUEL: OUTPUT CAPACITY (MBH)	FLUID: SUPPLY TEMP (°F)	FLUID: RETURN TEMP (°F)	FLUID: DESIGN FLOW (GPM)	FLUID: MIN FLOW (GPM)	FLUID: MAX WPD (FT. WG)	ELECTRICAL: FLA	ELECTRICAL: VOLT/ PHASE	MINIMUM EFFICIENCY (AFUE)	APPROX. WEIGHT (LBS)	MANUFACTURER & MODEL	NOTES
B-1	BOILER 174	BUILDING HEAT	CONDENSING	NAT. GAS/PROPANE	2,000	1,840	130	112	200	25	4.0	7	120/1	92%	3,054	LOCHINVAR CREST	1
B-2	BOILER 174	BUILDING HEAT	CONDENSING	NAT. GAS	2,000	1,840	130	112	200	25	4.0	7	120/1	92%	3,054	LOCHINVAR CREST	1

GENERAL NOTES:
A. UNITS MOUNTED ON HOUSEKEEPING PAD. PAD TO BE 8" HIGH, LENGTH AND WIDTH AS REQUIRED TO ACCOMMODATE BOLTDOWN OF BOILER TO PAD WITHOUT SPALLING OF CONCRETE.

B. MINIMUM EFFICIENCY IS AT 100% FIRE, 100 DEG F RETURN WATER TEMPERATURE AND 140 DEG F SUPPLY WATER TEMPERATURE.
C. NOT USED.
D. PROVIDE A MINIMUM SIDE CLEARANCE OF 36 INCHES FOR EACH BOILER.
E. PROVIDE 36 INCHES TOP CLEARANCE ABOVE BOILER.

NOTES:
1. MINIMUM FLOW LISTED IS ABSOLUTE MINIMUM FLOW, ALL LOADS.

FAN COIL UNIT SCHEDULE

TAG NUMBER	LOCATION	SERVICE	TYPE	MATCHING OUTDOOR UNIT	DX COOLING MBH	FAN: CFM	FAN: ESP (IN. WG)	FAN: FLA	FAN: VOLT/ PHASE	MANUFACTURER & MODEL	NOTES
FCU-IDF	IDF A219	IDF A219	DX	ACCU-IDF	18	800	0.30	4.3	208/1	CARRIER FV4C-002	1
FCU-MDF	MDF B126	MDF B126	DX	ACCU-MDF	36	1400	0.30	4.3	208/1	CARRIER FV4C-005	1
FCU-ELEC	ELEC C116	ELEC C116	DX	ACCU-ELEC	24	1000	0.30	4.3	208/1	CARRIER FV4C-003	1

NOTES:
1. INSTALL WITH MANUFACTURER'S MIXING BOX FOR ECONOMIZER OPERATION.

RETURN/EXHAUST GRILLES (C-2)

CFM RANGE	SQUARE NECK SIZE (BASED ON: TITUS 50F)	FACE SIZE: T-BAR	FACE SIZE: SURFACE
0-340	10x10	24x24	12x12
341-520	12x12	24x24	14x14
521-700	14x14	24x24	16x16
701-950	16x16	24x24	18X18
951-1200	18x18	24x24	20X20
1201-1800	22x22	24x24	24x24
1801-4000	22X46	24X48	24X48

GENERAL NOTES:

AIR COOLED CHILLER SCHEDULE

TAG NUMBER	LOCATION	SERVICE	DESIGN CAPACITY (TONS)	EVAPORATOR: EWT (°F)	EVAPORATOR: LWT (°F)	EVAPORATOR: FLUID	EVAPORATOR: DESIGN FLOW RATE (GPM)	EVAPORATOR: MAX WPD (FT. WG.)	EVAPORATOR: MINIMUM FLOW RATE (GPM)	ELECTRICAL: COMPRESSORS COUNT	ELECTRICAL: COMPRESSORS RLA	ELECTRICAL: COMPRESSORS VFD	ELECTRICAL: FANS COUNT	ELECTRICAL: FANS FLA PER FAN	ELECTRICAL: FANS VFD	ELECTRICAL: SINGLE POINT CONNECTION MCA	ELECTRICAL: SINGLE POINT CONNECTION VOLT/ PHASE	DESIGN EFFICIENCY: FULL LOAD (EER)	DESIGN EFFICIENCY: NPLV (EER)	DESIGN EFFICIENCY: FULL LOAD (COP)	DESIGN EFFICIENCY: IPLV/ NPLV (COP)	CODE AHRI EFFICIENCY: FULL LOAD (EER)	CODE AHRI EFFICIENCY: NPLV (EER)	CODE AHRI EFFICIENCY: FULL LOAD (COP)	CODE AHRI EFFICIENCY: IPLV/ NPLV (COP)	REFRIGERANT: TYPE	REFRIGERANT: QUANTITY (LBS)	APPROX. WEIGHT (LBS)	MANUFACTURER & MODEL	NOTES
ACC-1	SERVICE COURT	CHILLED WATER	112	56	44	WATER	224.0	7	113	4	218	N	8	3.6	N	260	460/3	10.3	15.4	2.95	15.5	10.1	-	-	15.5	R-410A	130	5,800	DAIKIN APPLIED AGZ	

GENERAL NOTES:
A. DESIGN EFFICIENCIES ARE AT DESIGN CONDITIONS LISTED IN THE SCHEDULE.
B. AHRI EFFICIENCIES ARE AT ARI STANDARD CONDITIONS.
C. CODE AHRI EFFICIENCY REQUIREMENTS PROVIDED FOR REFERENCE.
D. PROVIDE SCCR SUFFICIENT TO MEET THE AVAILABLE FAULT CURRENT AT THE PANELBOARD OR SWITCHBOARD FROM WHICH THE UNIT IS FED. COORDINATE WITH ELECTRICAL DRAWINGS AND ELECTRICAL CONTRACTOR.
E. PROVIDE CHILLER CAPABLE OF MINIMUM FLOW OF ATLEAST 50% OF DESIGN FLOW.

NOTES:
1. MOUNT TO CONCRETE PAD, TO BE 6" HIGH, LENGTH AND WIDTH AS REQUIRED TO ACCOMMODATE BOLTDOWN OF CHILLER TO PAD.

TERMINAL UNIT SCHEDULE

TAG NUMBER	LOCATION	SERVICE	TYPE	PRIMARY AIR: INLET (IN)	PRIMARY AIR: MAX CFM	PRIMARY AIR: MIN CFM	MANUFACTURER & MODEL	NOTES
TU-PRIN	HALL B109	PRINCIPAL	VV	7	520	104	TITUS DESV	
TU-RECPT	HEALTH B115	RECEPTION	VV	10	1100	220	TITUS DESV	
TU-WORK	WORKRM B209	WORK ROOM, OFC B207	VV	7	640	128	TITUS DESV	
TU-CONF	HALL B109	CONFERENCE	VV	8	710	142	TITUS DESV	1
TU -TECH	TECH B203	TECH B203, OFC B204	VV	7	520	104	TITUS DESV	
TU-INT	LACTATION B110	INTERIOR ADMIN	VV	7	565	113	TITUS DESV	
TU-MEDWK	HALL B109	MEDIA WORK ROOM	VV	6	400	80	TITUS DESV	
TU-GRP	HALL B109	SMALL GROUP	VV	8	780	156	TITUS DESV	1

GENERAL NOTES:
A. AIR PRESSURE DROP THROUGH TERMINAL UNIT TO BE NO GREATER THAN 0.2 IN.WG.
B. HYDRONIC COIL TO BE MOUNTED EXTERNALLY IN DUCTWORK DOWNSTREAM OF TERMINAL UNIT.

NOTES:
1. PROVIDE COMBINED TEMPERATURE AND CO2 SENSORS.

KEY:
VV = VARIABLE AIR VOLUME TERMINAL UNIT

SUPPLY AIR SLOT DIFFUSERS (S-1)

CFM RANGE	PLENUM INLET SIZE (BASED ON: TITUS TBDI-10)	# OF SLOTS	SLOT WIDTH (IN)	SLOT LENGTH (IN)	FACE SIZE
0-80	6 IN DIA OVAL	1	1	24	24x2
81-120	6 IN DIA OVAL	1	1	48	48x2
121-180	8 IN DIA OVAL	1	1	48	48x2
181-325	10 IN DIA OVAL	2	1	48	48x4

ROOF VENTILATOR SCHEDULE

TAG NUMBER	LOCATION	SERVICE	TYPE	AIRFLOW: CFM	AIRFLOW: TSP (IN. WG)	THROAT SIZE (IN)	APPROX. WEIGHT (LBS)	MANUFACTURER & MODEL	NOTES
RVE-A	ROOF ABOVE A PLATFORM	EF-A-RR	EXHAUST	1540	.05	20x20	100	GREENHECK FGR	
RVE-B	ROOF ABOVE B PLATFORM	EF-B-AA, EF-ADMIN	EXHAUST	2100	.05	24x24	100	GREENHECK FGR	1
RVR-B1	ROOF ABOVE LOBBY	MEDIA, LOBBY	RELIEF	4250	.05	42	60	GREENHECK GRSR	1
RVR-B2	ROOF ABOVE LOBBY	MEDIA, LOBBY	RELIEF	4250	.05	42	60	GREENHECK GRSR	1

GENERAL NOTES:
A. NONE

NOTES:
1. PROVIDE LOW LEAKAGE MOTORIZED DAMPER - BELIMO LOW VOLTAGE ACTUATOR

PUMP SCHEDULE

TAG NUMBER	LOCATION	SERVICE	TYPE	FLUID TYPE	PERFORMANCE: MAX FLOW (GPM)	PERFORMANCE: MIN FLOW (GPM)	PERFORMANCE: HEAD (FT. WC.)	PERFORMANCE: SHUTOFF HEAD (FT. WC.)	PERFORMANCE: PUMP EFFICIENCY %	MOTOR: TYPE	MOTOR: HP	MOTOR: RPM	MOTOR: VFD	MOTOR: VOLT/ PHASE	APPROX. WEIGHT (LBS)	MANUFACTURER & MODEL	NOTES
CP-1	BOILER A119	DUAL TEMPERATURE WATER	BASE MOUNT	WATER	200	44	105	108	70	ODP	10	1800	Y	460/3	400	B&G 1510	
CP-2	BOILER A119	DUAL TEMPERATURE WATER	BASE MOUNT	WATER	200	44	105	108	70	ODP	10	1800	Y	460/3	400	B&G 1510	

GENERAL NOTES:
A.

NOTES:

DUCT MOUNTED COIL SCHEDULE

TAG NUMBER	LOCATION	SERVICE	SIZE HxW (IN)	ECONOMIZER AIRFLOW (CFM)	COOLING CFM	HYDRONIC COIL - COOLING: TOTAL CAPACITY (MBH)	HYDRONIC COIL - COOLING: DB EAT (°F)	HYDRONIC COIL - COOLING: WB EAT (°F)	HYDRONIC COIL - COOLING: LAT (°F)	HYDRONIC COIL - COOLING: WB LAT (°F)	HYDRONIC COIL - COOLING: EWT (°F)	HYDRONIC COIL - COOLING: MIN WTD (°F)	HYDRONIC COIL - COOLING: FLOW RATE (GPM)	HYDRONIC COIL - HEATING: HEATING CFM	HYDRONIC COIL - HEATING: CAPACITY (MBH)	HYDRONIC COIL - HEATING: EAT (°F)	HYDRONIC COIL - HEATING: LAT (°F)	HYDRONIC COIL - HEATING: EWT (°F)	HYDRONIC COIL - HEATING: WTD (°F)	HYDRONIC COIL - HEATING: FLOW RATE (GPM)	RUNOUT SIZE (IN)	MANUFACTURER	NOTES
DC-PRIN	HALL B109	PRINCIPAL	16x16	520	290	2.13	65	62.5	55	53	44	10	0.4	290	6.00	65	95	130	30	0.4	3/4	GREENHECK	
DC-RECPT	HEALTH B115	RECEPTION	20x28	1,100	1,010	7.47	65	62.5	55	53	44	10	1.5	1,010	22.50	65	95	130	30	1.5	3/4	GREENHECK	
DC-WORK	WORKRM B209	WORK ROOM, OFC B207	18x18	640	320	3.51	65	62.5	55	53	44	10	0.7	320	10.50	65	95	130	30	0.7	3/4	GREENHECK	
DC-CONF	HALL B109	CONFERENCE	20x20	710	710	5.42	65	62.5	55	53	44	10	1.1	710	16.50	65	95	130	30	1.1	3/4	GREENHECK	
DC -TECH	TECH B203	TECH, OFF B204	16x16	520	340	2.67	65	62.5	55	53	44	10	0.5	340	7.50	65	95	130	30	0.5	3/4	GREENHECK	
DC-INT	LACTATION B110	INTERIOR ADMIN	18x18	565	350	2.63	65	62.5	55	53	44	10	0.5	350	7.50	65	95	130	30	0.5	3/4	GREENHECK	
DC-MEDWK	HALL B109	MEDIA WORK ROOM	14x14	400	280	2.07	65	62.5	55	53	44	10	0.4	280	6.00	65	95	130	30	0.4	3/4	GREENHECK	
DC-GRP	HALL B109	SMALL GROUP	20x20	780	780	5.98	65	62.5	55	53	44	10	1.2	780	18.00	65	95	130	30	1.2	3/4	GREENHECK	

GENERAL NOTES:
A. HYDRONIC COIL TO BE MOUNTED EXTERNALLY IN THE DUCTWORK DOWNSTREAM OF THE TERMINAL UNIT.
B. AIR PRESSURE DROP THROUGH COIL TO BE NO GREATER THAN 0.40 IN.WG.
C. WATER PRESSURE DROP THROUGH COIL NOT TO EXCEED 10 FT.
D. AIR VELOCITY ACROSS COIL NOT TO EXCEED 300 FPM.
E. MAX 10 FPI, 4 ROWS.

NOTES:
1. NOT USED.

CEILING SUPPLY DIFFUSERS (C-1)

CFM RANGE	SQUARE NECK SIZE (BASED ON: TITUS MCD)	FACE SIZE: T-BAR	FACE SIZE: SURFACE
0-200	6x6	24x24	8x8
201-320	8x8	24x24	10x10
321-440	10x10	24x24	12x12
440-550	12x12	24x24	14x14
551-680	14x14	24x24	16x16
681-800	16x16	24x24	18x18
801-1100	18x18	24x24	20x20

PIVOT ARCHITECTURE

REGISTERED PROFESSIONAL ENGINEER 18329PE OREGON JULY 15, 1994 NICHOLAS P. COLLIGAN
EXPIRES 12-31-17

IBI GROUP

PAE Portland | San Francisco | Seattle pae-engineers.com

BID SET
4J EUGENE SCHOOL DISTRICT 4J
120 WEST HILLEARD AVENUE, EUGENE, OREGON 97404
RIVER ROAD / EL CAMINO DEL RIO ELEMENTARY SCHOOL

EQUIPMENT SCHEDULE - MECHANICAL

PROJECT #	1337.00
ISSUE DATE	2.12.2016
DRAWN	SC
CHECKED	PIC

REVISIONS

M002

PRINTED ON: 2/11/2016 4:12:16 PM FROM FILE: C:\Revit Local Files\13-1533 MEP15\13-1533 MEP15_karol.kluczynski.rvt

© 2014 PIVOT ARCHITECTURE

AIR HANDLING UNIT

TAG NUMBER	LOCATION	SERVICE	MIXING BOX: MINIMUM OSA CFM	MIXING BOX: DESIGN OSA CFM	MIXING BOX: FILTER MERV RATING	SUPPLY FAN: AIRFLOW CFM	SUPPLY FAN: ECONOMIZER AIRFLOW CFM	SUPPLY FAN: FAN TYPE	SUPPLY FAN: TSP (IN. WG.)	SUPPLY FAN: ESP (IN. WG.)	SUPPLY FAN: FAN RPM	SUPPLY FAN: FAN QUANTITY	SUPPLY FAN: MOTOR BHP	SUPPLY FAN: MOTOR HP	SUPPLY FAN: VOLT/ PHASE	SUPPLY FAN: VFD	SUPPLY FAN: EC	HYDRONIC COIL - HEATING MODE: HEATING AIRFLOW CFM	HEATING MODE: EAT (°F)	HEATING MODE: LAT (°F)	HEATING MODE: GPM	HEATING MODE: EWT (°F)	HYDRONIC COIL - COOLING MODE: COOLING AIRFLOW CFM	COOLING MODE: EAT (°F DB/WB)	COOLING MODE: LAT (°F DB/WB) (°F DB/WB)	COOLING MODE: GPM	COOLING MODE: EWT (°F)	COOLING MODE: MIN WTD (°F)	DESIGN COIL FACE VELOCITY (FPM)	COIL RUNOUT PIPING (INCH)	APPROX. WEIGHT (LBS)	MANUFACTURER & MODEL	NOTES
AH-GYM	MECH C200	GYM C100	1,630	1,630	8	12,600	12,600	BC PLENUM	1.7	0.7	1,200	1	6.0	7.5	460/3	Y	N	12,600	64.0	90.0	24.0	130	12,600	76.2/62.5	54.1/52.5	53.0	44	12	450	2 1/2	3,451	AAON M2	2, 4
AH-CAFÉ	MECH C200	CAFETERIA C101	650	2,900	8	7,600	7,600	BC PLENUM	1.4	0.7	1,200	2	3.2	4 (2)	460/3	N	Y	7,600	51.0	90.0	21.4	130	7,600	78.4/63.0	54.1/52.5	23.4	44	15	450	2	900	AAON H3E	
AH-KITCH	MECH C200	KITCHEN C103	-	-	8	1,200	1,500	BC PLENUM	1.4	0.6	1,800	1	0.6	1.3	460/3	N	Y	1,200	62.0	90.0	2.4	130	1,200	75.0/62.0	54.1/52.8	5.4	44	12	450	1	550	AAON H3B	
AH-CUST	MECH C200	CUSTODIAL/GYM SUPPORT	100	100	8	900	1,700	BC PLENUM	1.4	0.6	1,800	1	0.6	1.3	460/3	N	Y	900	62.0	90.0	1.8	130	900	75.0/62.0	54.3/53.0	5.0	44	10	450	1	680	AAON H3B	
AH-MUSIC	MECH C200	MUSIC C102	65	440	8	1,200	2,000	BC PLENUM	1.8	0.7	1,800	1	0.6	1.3	460/3	N	Y	1,200	52.0	90.0	3.3	130	1,200	78./63.0	54./52.8	5.9	44	12	450	1	680	AAON H3B	
AH-COMM	MECH B300	COMMUNITY CENTER B119	40	180	8	800	1,500	BC PLENUM	1.4	0.6	1,800	1	0.6	1.3	460/3	N	Y	800	59.0	90.0	1.3	130	800	77.0/62.5	54.3/52.8	5.0	44	10	450	1	680	AAON H3B	1
AH-ADMIN	MECH B300	ADMIN AREA	200	660	8	4,080	5,300	BC PLENUM	2.6	1.5	1,200	2	4.2	2.3 (2)	460/3	N	Y	4,080	60.4	65.0	7.5	130	4,080	77.5/62.5	64.0/62.5	10.0	44	18	450	1 1/4	1,020	AAON H3D	
AH-MEDIA	MECH B300	MEDIA CENTER B116	1,000	1,000	8	4,000	5,000	BC PLENUM	1.5	0.8	1,200	2	2.8	2.3 (2)	460/3	N	Y	3,700	58.0	90.0	9.3	130	3,700	77.3/62.5	54.0/52.5	19.7	44	12	450	1 1/2	1,020	AAON H3D	
AH-STAFF	MECH B300	STAFF ROOM B200	50	130	8	850	1,200	BC PLENUM	1.3	0.7	1,800	1	0.6	1.3	460/3	N	Y	1,200	64.0	90.0	2.0	130	1,200	76.0/62.5	54.3/52.8	5.5	44	12	450	1	680	AAON H3B	1
AH-LOBBY	MECH B300	LOBBY, HALL B101, B118	250	540	8	3,200	3,500	BC PLENUM	1.3	0.8	1,800	1	0.6	1.3	460/3	N	Y	3,200	61.0	90.0	6.0	130	3,200	76.5/62.5	54.0/52.5	15.2	44	12	450	1 1/2	790	AAON H3C	1
AH-A1HALL	MECH A300	1ST FLR HALL, COMMONS	250	330	8	2,300	3,000	BC PLENUM	1.6	0.9	1800	2	1.3	4.0	460/3	N	Y	2,300	64.8	90.0	4.2	130	2,300	76.0/62.5	54.0/52.5	10.8	44	12	450	1 1/4	790	AAON H3C	
AH-A2HALL	MECH A300	2ND FLR HALL, COMMONS	250	330	8	2,300	3,000	BC PLENUM	1.6	0.9	1800	2	1.3	4.0	460/3	N	Y	2,300	64.8	90.0	4.2	130	2,300	76.0/62.5	54.0/52.5	10.8	44	12	450	1 1/4	790	AAON H3C	
AH-A100	MECH A300	CLASSROOM A106	125	480	8	1,200	1,500	BC PLENUM	1.2	0.6	1800	1	0.6	1.3	460/3	N	Y	1200	50.8	90.0	2.8	130	1200	78.6/63.0	54.3/52.8	5.9	44	12	450	1	680	AAON H3B	
AH-A101	MECH A300	CLASSROOM A105	125	480	8	900	1,500	BC PLENUM	1.2	0.6	1800	1	0.6	1.3	460/3	N	Y	900	44.0	90.0	2.2	130	900	79.8/63.0	54.3/52.8	4.6	44	12	450	1	680	AAON H3B	
AH-A103	MECH A300	CLASSROOM A104	125	480	8	900	1,500	BC PLENUM	1.2	0.6	1800	1	0.6	1.3	460/3	N	Y	900	44.0	90.0	2.2	130	900	79.8/63.0	54.3/52.8	4.6	44	12	450	1	680	AAON H3B	
AH-A104	MECH A300	CLASSROOM A109	125	480	8	1200	1,500	BC PLENUM	1.2	0.6	1800	1	0.6	1.3	460/3	N	Y	1200	50.8	90.0	2.8	130	1200	78.6/63.0	54.3/52.8	5.9	44	12	450	1	680	AAON H3B	
AH-A105	MECH A300	CLASSROOM A103	125	480	8	900	1,500	BC PLENUM	1.2	0.6	1800	1	0.6	1.3	460/3	N	Y	900	44.0	90.0	2.2	130	900	79.8/63.0	54.3/52.8	4.6	44	12	450	1	680	AAON H3B	
AH-A106	MECH A300	CLASSROOM A110	125	480	8	1200	1,500	BC PLENUM	1.2	0.6	1800	1	0.6	1.3	460/3	N	Y	1200	50.8	90.0	2.8	130	1200	78.6/63.0	54.3/52.8	5.9	44	12	450	1	680	AAON H3B	
AH-A107	MECH A300	CLASSROOM A102	125	480	8	900	1,500	BC PLENUM	1.2	0.6	1800	1	0.6	1.3	460/3	N	Y	900	44.0	90.0	2.2	130	900	79.8/63.0	54.3/52.8	4.6	44	12	450	1	680	AAON H3B	
AH-A109	MECH A300	CLASSROOM A101	125	480	8	900	1,500	BC PLENUM	1.2	0.6	1800	1	0.6	1.3	460/3	N	Y	900	44.0	90.0	2.2	130	900	79.8/63.0	54.3/52.8	4.6	44	12	450	1	680	AAON H3B	
AH-A110	MECH A300	CLASSROOM A113	125	480	8	1200	1,500	BC PLENUM	1.2	0.6	1800	1	0.6	1.3	460/3	N	Y	1200	50.8	90.0	2.8	130	1200	78.6/63.0	54.3/52.8	5.9	44	12	450	1	680	AAON H3B	
AH-A111	MECH A300	CLASSROOM A100	125	480	8	900	1,500	BC PLENUM	1.2	0.6	1800	1	0.6	1.3	460/3	N	Y	900	44.0	90.0	2.2	130	900	79.8/63.0	54.3/52.8	4.6	44	12	450	1	680	AAON H3B	
AH-A112	MECH A300	CLASSROOM A114	125	480	8	1200	1,500	BC PLENUM	1.2	0.6	1800	1	0.6	1.3	460/3	N	Y	1200	50.8	90.0	2.8	130	1200	78.6/63.0	54.3/52.8	5.9	44	12	450	1	680	AAON H3B	
AH-A200	MECH A300	CLASSROOM A206	125	480	8	1,200	1,500	BC PLENUM	1.2	0.6	1800	1	0.6	1.3	460/3	N	Y	1200	50.8	90.0	2.8	130	1200	78.6/63.0	54.3/52.8	5.9	44	12	450	1	680	AAON H3B	
AH-A201	MECH A300	CLASSROOM A205	125	480	8	900	1,500	BC PLENUM	1.2	0.6	1800	1	0.6	1.3	460/3	N	Y	900	44.0	90.0	2.2	130	900	79.8/63.0	54.3/52.8	4.6	44	12	450	1	680	AAON H3B	
AH-A203	MECH A300	CLASSROOM A204	125	480	8	900	1,500	BC PLENUM	1.2	0.6	1800	1	0.6	1.3	460/3	N	Y	900	44.0	90.0	2.2	130	900	79.8/63.0	54.3/52.8	4.6	44	12	450	1	680	AAON H3B	
AH-A204	MECH A300	CLASSROOM A209	125	480	8	1,200	1,500	BC PLENUM	1.2	0.6	1800	1	0.6	1.3	460/3	N	Y	1200	50.8	90.0	2.8	130	1200	78.6/63.0	54.3/52.8	5.9	44	12	450	1	680	AAON H3B	
AH-A205	MECH A300	CLASSROOM A203	125	480	8	900	1,500	BC PLENUM	1.2	0.6	1800	1	0.6	1.3	460/3	N	Y	900	44.0	90.0	2.2	130	900	79.8/63.0	54.3/52.8	4.6	44	12	450	1	680	AAON H3B	
AH-A206	MECH A300	CLASSROOM A210	125	480	8	1,200	1,500	BC PLENUM	1.2	0.6	1800	1	0.6	1.3	460/3	N	Y	1200	50.8	90.0	2.8	130	1200	78.6/63.0	54.3/52.8	5.9	44	12	450	1	680	AAON H3B	
AH-A207	MECH A300	CLASSROOM A202	125	480	8	900	1,500	BC PLENUM	1.2	0.6	1800	1	0.6	1.3	460/3	N	Y	900	44.0	90.0	2.2	130	900	79.8/63.0	54.3/52.8	4.6	44	12	450	1	680	AAON H3B	
AH-A209	MECH A300	CLASSROOM A201	125	480	8	900	1,500	BC PLENUM	1.2	0.6	1800	1	0.6	1.3	460/3	N	Y	900	44.0	90.0	2.2	130	900	79.8/63.0	54.3/52.8	4.6	44	12	450	1	680	AAON H3B	
AH-A210	MECH A300	CLASSROOM A213	125	480	8	1,200	1,500	BC PLENUM	1.2	0.6	1800	1	0.6	1.3	460/3	N	Y	1200	50.8	90.0	2.8	130	1200	78.6/63.0	54.3/52.8	5.9	44	12	450	1	680	AAON H3B	
AH-A211	MECH A300	CLASSROOM A200	125	480	8	900	1,500	BC PLENUM	1.2	0.6	1800	1	0.6	1.3	460/3	N	Y	900	44.0	90.0	2.2	130	900	79.8/63.0	54.3/52.8	4.6	44	12	450	1	680	AAON H3B	
AH-A212	MECH A300	ELL A214/SPEECH A223	125	480	8	1,200	1,500	BC PLENUM	1.2	0.6	1800	1	0.6	1.3	460/3	N	Y	1200	50.8	90.0	2.8	130	1200	78.6/63.0	54.3/52.8	5.9	44	12	450	1	680	AAON H3B	

GENERAL NOTES:
A. MINIMUM OSA CALCULATED BASED ON CODE AND ASHRAE STANDARD 62.
B. DUAL HEATING/COOLING COILS BASED ON MAXIMUM FACE VELOCITY OF 500 FPM, 0.5 IN WG MAXIMUM AIR PRESSURE DROP AND 12 FT WG MAXIMUM WATER PRESSURE DROP.
C. PROVIDE SCCR SUFFICIENT TO MEET THE AVAILABLE FAULT CURRENT AT THE PANELBOARD OR SWITCHBOARD FROM WHICH THE UNIT IS FED. COORDINATE WITH ELECTRICAL DRAWINGS AND ELECTRICAL CONTRACTOR.
D. ALL FANS TO BE DIRECT DRIVE UNLESS NOTED OTHERWISE.
E. SEE PLANS FOR POSITION OF RETURN AND OUTSIDE AIR CONNECTIONS
F. HEATING WATER MAXIMUM 30 DEGREE DT.
G. SEE 6/M502 AND PLANS FOR DETAIL AND LOCATION OF SMOKE DETECTOR INSTALLATION.

NOTES:
1. UNIT TO HAVE TOP SA DISCHARGE.
2. UNIT TO HAVE SIDE SA DISCHARGE, SEE DRAWINGS FOR ORIENTATION.
3. NOT USED.
4. UNIT TO BE MOUNTED ON INTEGRAL 6" BASE RAIL.

FAN SCHEDULE

TAG NUMBER	LOCATION	SERVICE	TYPE	AIRFLOW: CFM	AIRFLOW: TSP (IN WG)	AIRFLOW: FAN RPM	MOTOR: HP	MOTOR: VOLT/ PHASE	VFD	EC MOTOR	INLET dBA	APPROX. WEIGHT (LBS)	MANUFACTURER & MODEL	NOTES
EF-A-RR	MECH A300	SECTOR A	INLINE	1540	0.65	1185	3/4	115/1	NO	YES	60	90	GREENHECK SQ-140-VG	1, 4
EF-B-RR	MECH B300	SECTOR B	INLINE	1340	1.00	1529	3/4	115/1	NO	YES	62	60	GREENHECK SQ-130-VG	1
EF-C-RR	KITCH	C RESTROOMS	INLINE	1020	0.80	1401	1/2	115/1	NO	YES	57	60	GREENHECK SQ-120-VG	1, 4
EF-GREASE	KITCH	GREASE HOOD	SIDEWALL UPBLAST	1720	1.00	1420	3/4	115/1	NO	YES	62	80	GREENHECK CW-141-VG	1
EF-DISH	KITCH	DISHWASHER	SIDEWALL UPBLAST	600	0.60	1352	1/4	115/1	NO	YES	54	50	GREENHECK CW-099-VG	1, 4
RF-ADMN	MECH B300	ADMIN RETURN/RELIEF	INLINE	4500	0.75	699	1	460/3	YES		64	250	GREENHECK BSQ-240-10	
EF-ADMN	MECH B300	ADMIN RESTROOMS	INLINE	780	1.50	1850	3/4	115/1	NO	YES	62	60	GREENHECK SQ-130HP-VG	1
EF-IDF	A-IDF	A-IDF	INLINE	800	0.50	1352	1/4	115/1	NO	YES	55	50	GREENHECK SQ-100-VG	1, 2, 6
EF-MDF	B-MDF	B-MDF	INLINE	1400	0.50	1296	3/4	115/1	NO	YES	57	60	GREENHECK SQ-130-VG	1, 2, 6
EF-ELEC	ELEC	ELECTRICAL	INLINE	1000	0.50	1223	1/2	115/1	NO	YES	54	60	GREENHECK SQ-120-VG	1, 2, 6
EF-KILN	CUST C113	KILN	INLINE	150	-	-	-	115/1	-	NO	-	-	ENVIROVENT	3
EF-B-DRY	HEALTH B115	CLOTHES DRYER	DRYER BOOSTER	100	0.80	2559	0.1	115/1	NO	NO	-	15	FANTECH DEDPV-705 UL LISTED	5
EF-C-DRY	CUST C113	CLOTHES DRYER	DRYER BOOSTER	100	0.80	2559	0.1	115/1	NO	NO	-	15	FANTECH DEDPV-705 UL LISTED	5

GENERAL NOTES:

NOTES:
1. VARIABLE SPEED EC MOTOR
2. PROVIDE SCREEN OVER INLET
3. OWNER FURNISHED, CONTRACTOR INSTALLED. PROVIDE WALL MOUNT DISCONNECT ADACJENT TO KILN IN CUSTODIAL .
4. FAN TO BE PROVIDED WITH LOW LEAKAGE MOTORIZED BACKDRAFT DAMPER, WIRED ACROSS FAN MOTOR WITH 120 VOLT ACTUATOR, BELIMO LMX-120-3 OR MNX-120-3.
5. ENNUNCIATOR PANEL TO BE LOCATED AT DRYER POINT OF USE, SEE PLANS FOR LOCATION.
6. FAN PROVIDES ROOM PRESSURE RELIEF AND HEAT RECOVERY. SEE ASSOCIATED FAN COIL UNIT AND CONDENSING UNIT SCHEDULES.

CABINET UNIT HEATER SCHEDULE

TAG NUMBER	LOCATION	SERVICE	TYPE	HYDRONIC HEATING COIL: OUTPUT (MBH)	HYDRONIC HEATING COIL: EWT (°F)	HYDRONIC HEATING COIL: GPM	HYDRONIC HEATING COIL: COIL RUNOUT PIPING INCH	MOTOR: HP	MOTOR: VOLT/ PHASE	APPROX. WEIGHT (LBS)	MANUFACTURER & MODEL	NOTES
CUH-VEST	VEST B100	VEST B100	HORIZONTAL	21.5	130	1.50	3/4	124 WATTS	120/1	120	JCI FHP40	
CUH-HALLC	HALL C108	HALL C108	HORIZONTAL	21.5	130	1.50	3/4	124 WATTS	120/2	120	JCI FHP40	

GENERAL NOTES:
A. NONE

NOTES:
1. NONE

DUCT SILENCER

TAG NUMBER	LOCATION	AIRFLOW (CFM)	VELOCITY (FPM)	WIDTH x HEIGHT (IN x IN)	MAX PRESSURE DROP (IN W.C.)	LENGTH (FT)	APPROX. WEIGHT (LBS.)	TYPE	NOTES
SS-GYM	AH-GYM SUPPLY	12600	1200	38 x 40	0.30	5	175	IAC LFM	
SR-GYM	AH-GYM RETURN	12600	1000	52 x 36	0.30	5	300	IAC LFM	
SS-MEDIA	AH-MEDIA SUPPLY	3700	800	26 x 26	0.20	5	125	IAC LFM	
SR-MEDIA	AH-MEDIA RETURN	3700	800	30 x 22	0.20	5	125	IAC LFM	
SR-CAFÉ	AH-CAFÉ RETURN	7600	1000	52 x 22	0.30	5	225	IAC LFM	

GENERAL NOTES:
A. REFER TO SPECIFICATION SECTION 23 33 19 FOR ADDITONAL INFORMATION.

NOTES:

PIVOT ARCHITECTURE
REGISTERED PROFESSIONAL ENGINEER 18329PE OREGON JUNE 15, 1990 THOMAS P. COLLINS
EXPIRES 12-31-17
IBI GROUP
PAE Portland | San Francisco | Seattle pae-engineers.com

BID SET
4J EUGENE SCHOOL DISTRICT 4J
120 WEST HILLEARD AVENUE, EUGENE, OREGON 97404
RIVER ROAD / EL CAMINO DEL RIO ELEMENTARY SCHOOL

EQUIPMENT SCHEDULES - MECHANICAL

PROJECT #	1337.00
ISSUE DATE:	2.12.2016
DRAWN	SC
CHECKED	PIC

REVISIONS

M003

PRINTED ON: 2/11/2016 4:12:18 PM FROM FILE: C:\Revit Local Files\13-1533 MEP15\13-1533 MEP15_karol.kluczynski.rvt

© 2014 PIVOT ARCHITECTURE

VENTILATION SCHEDULE - MULTI ZONE UNIT - OREGON

AH-ADMIN

LOCATION	FLOOR AREA (SF)	PRIMARY AIRFLOW RATE (CFM)	OCCUPANCY CLASSIFICATION	PEOPLE OUTDOOR AIRFLOW RATE Rp (CFM/PERSON)	AREA OUTDOOR AIRFLOW RATE Ra (CFM/SF)	DEFAULT OCCUPANT DENSITY (PEOPLE/1000SF)	CODE POPULATION	DESIGN POPULATION	OUTDOOR AIRFLOW RATE Vbz (CFM)	ZONE AIR DISTRIBUTION EFFECTIVENESS Ez	OUTDOOR AIR INTAKE Voz (CFM)	PRIMARY OUTDOOR AIR FRACTION Zp	NOTES
B209 Work Room	331	269	Conference/meeting	5	0.06	50	16.6	3.0	34.9	0.8	44	0.16	
B105 Small Group	237	784	Conference/meeting	5	0.06	50	11.8	12.0	74.2	0.8	93	0.12	
B104 Conference	211	712	Conference/meeting	5	0.06	50	10.5	12.0	72.6	0.8	91	0.13	
B103 Principal	237	287	Office spaces	5	0.06	5	1.2	2.0	24.2	0.8	31	0.11	
B115 Health	317	241	Office spaces	5	0.06	5	1.6	6.0	49.0	0.8	62	0.26	
B113 Quiet Room	58	42	Office spaces	5	0.06	5	0.3	1.0	8.5	0.8	11	0.26	
B110 Lactation	79	49	Office spaces	5	0.06	5	0.4	2.0	14.7	0.8	19	0.39	
B102 Reception	740	1010	Reception areas	5	0.06	30	22.2	10.0	94.4	0.8	118	0.12	
B108 Hallway	251	42	Corridors	--	0.06	--	0.0		15.0	0.8	19	0.45	
B207 Office	106	50	Office spaces	5	0.06	5	0.5	1.0	11.4	0.8	15	0.30	
B204 Office	140	81	Office spaces	5	0.06	5	0.7	1.0	13.4	0.8	17	0.21	
B203 Tech	185	263	Office spaces	5	0.06	5	0.9	1.0	16.1	0.8	21	0.08	
TOTALS:	2892	3830					67	51	428		541	Zp max = 0.45	

TOTAL AIRFLOW: 4080 — SYSTEM VENTILATION EFFICIENCY - Ev: 0.69
SYSTEM POPULATION: 50 — OCCUPANT DIVERSITY - D: 0.93
UNCORRECTED OUTDOOR AIR INTAKE - Vou: 445
CODE REQUIRED OUTDOOR AIR INTAKE FLOWRATE - Vot: 642

GENERAL NOTES:
1. SYSTEM OUTDOOR AIR CALCULATION IS BASED ON THE SECTION 403 OF THE 2010 OREGON MECHANICAL SPECIALTY CODE.
2. REFER TO AIR HANDLING UNIT SCHEDULE FOR ACTUAL OUTDOOR AIR FLOW RATE.

NOTES:
A. DESIGN OCCUPANCY REPRESENTS THE AVERAGE OCCUPANCY, WHICH IS NOT LESS THAN 1/2 THE CODE OCCUPANCY.

VENTILATION SCHEDULE - SINGLE ZONE UNITS - OREGON

SINGLE ZONE AIRHANDLERS

LOCATION	FLOOR AREA (SF)	PRIMARY AIRFLOW RATE (CFM)	OCCUPANCY CLASSIFICATION	PEOPLE OUTDOOR AIRFLOW RATE Rp (CFM/PERSON)	AREA OUTDOOR AIRFLOW RATE Ra (CFM/SF)	DEFAULT OCCUPANT DENSITY (PEOPLE/1000SF)	CODE POPULATION	DESIGN POPULATION	OUTDOOR AIRFLOW RATE Vbz (CFM)	ZONE AIR DISTRIBUTION EFFECTIVENESS Ez	OUTDOOR AIR INTAKE Voz (CFM)	PRIMARY OUTDOOR AIR FRACTION Zp	NOTES
AH-105 (Classroom A103)	1016	900	Classrooms (age 9 plus)	10	0.12	35	35.5	35.0	471.9	1.0	472	0.52	
AH-103 (Classroom A104)	1016	900	Classrooms (age 9 plus)	10	0.12	35	35.5	35.0	471.9	1.0	472	0.52	
AH-101 (Classroom A105)	1016	900	Classrooms (age 9 plus)	10	0.12	35	35.5	35.0	471.9	1.0	472	0.52	
AH-106 (Classroom A110)	1046	1200	Classrooms (age 9 plus)	10	0.12	35	36.6	35.0	475.5	1.0	476	0.40	
AH-104 (Classroom A109)	1046	1200	Classrooms (age 9 plus)	10	0.12	35	36.6	35.0	475.5	1.0	476	0.40	
AH-100 (Classroom A105)	1046	1200	Classrooms (age 9 plus)	10	0.12	35	36.6	35.0	475.5	1.0	476	0.40	
AH-COMM (Community B119)	460	800	Conference/meeting	5	0.06	50	23.0	23.0	142.6	0.8	179	0.22	
AH-MEDIA (Media Center B116)	2301	4000	Media center	10	0.12	25	57.5	35.0	626.1	0.8	783	0.20	
AH-LOBBY (Lobby B101/B102)	1301	3200	Lobbies/prefunction	8	0.06	30	39.0	35.0	340.6	1.0	341	0.11	
AH-CAFÉ (CAFETERIA C101)	3540	7600	Cafeteria, fast food	8	0.18	100	354.0	300.0	2887.3	1.0	2888	0.38	
AH-GYM (Gym C100)	5383	12600	Gym, stadium, arena (play area)	--	0.30	--	0.0	700.0	1615.0	1.0	1615	0.13	
AH-MUSIC (Music C102)	1343	1200	Music/theater/dance	10	0.06	35	47.0	35.0	430.6	1.0	431	0.36	
AH-A112 (Classroom A114)	1012	1200	Classrooms (age 9 plus)	10	0.12	35	35.4	35.0	471.4	1.0	472	0.39	
AH-211 (Classroom A200)	1018	900	Classrooms (age 9 plus)	10	0.12	35	35.6	35.0	472.2	1.0	473	0.53	
AH-209 (Classroom A201)	1021	900	Classrooms (age 9 plus)	10	0.12	35	35.7	35.0	472.5	1.0	473	0.53	
AH-207 (Classroom A202)	1022	900	Classrooms (age 9 plus)	10	0.12	35	35.8	35.0	472.6	1.0	473	0.53	
AH-205 (Classroom A203)	1019	900	Classrooms (age 9 plus)	10	0.12	35	35.7	35.0	472.3	1.0	473	0.53	
AH-203 (Classroom A204)	1021	900	Classrooms (age 9 plus)	10	0.12	35	35.7	35.0	472.5	1.0	473	0.53	
AH-201 (Classroom A205)	1021	900	Classrooms (age 9 plus)	10	0.12	35	35.7	35.0	472.5	1.0	473	0.53	
AH-A110 (Classroom A113)	1043	1200	Classrooms (age 9 plus)	10	0.12	35	36.5	35.0	475.2	1.0	476	0.40	
AH-A210 (Classroom A213)	1057	1200	Classrooms (age 9 plus)	10	0.12	35	37.0	35.0	476.8	1.0	477	0.40	
AH-A212 (Classroom A214)	777	1200	Classrooms (age 9 plus)	10	0.12	35	27.2	35.0	443.2	1.0	444	0.37	
AH-206 (Classroom A210)	1046	1200	Classrooms (age 9 plus)	10	0.12	35	36.6	35.0	475.5	1.0	476	0.40	
AH-204 (Classroom A209)	1046	1200	Classrooms (age 9 plus)	10	0.12	35	36.6	35.0	475.5	1.0	476	0.40	
AH-200 (Classroom A206)	1049	1200	Classrooms (age 9 plus)	10	0.12	35	36.7	35.0	475.9	1.0	476	0.40	
AH-A111 (Classroom A100)	1016	900	Classrooms (age 9 plus)	10	0.12	35	35.5	35.0	471.9	1.0	472	0.52	
AH-STAFF (Staff B200)	710	850	Office spaces	5	0.06	5	3.6	12.0	102.6	0.8	129	0.15	
AH-109 (Classroom A101)	1016	900	Classrooms (age 9 plus)	10	0.12	35	35.5	35.0	471.9	1.0	472	0.52	
AH-107 (Classroom A102)	1016	900	Classrooms (age 9 plus)	10	0.12	35	35.5	35.0	471.9	1.0	472	0.52	

GENERAL NOTES:
1. SYSTEM OUTDOOR AIR CALCULATION IS BASED ON THE SECTION 403 OF THE 2010 OREGON MECHANICAL SPECIALTY CODE.
2. REFER TO AIR HANDLING UNIT SCHEDULE FOR ACTUAL OUTDOOR AIR FLOW RATE.

NOTES:
A. DESIGN OCCUPANCY REPRESENTS THE AVERAGE OCCUPANCY, WHICH IS NOT LESS THAN 1/2 THE CODE OCCUPANCY.

PIVOT ARCHITECTURE

REGISTERED PROFESSIONAL ENGINEER 18329PE OREGON JANUARY 15, 1986 NICHOLAS P. COLLINS
EXPIRES 12-31-17
2-8-2016

IBI GROUP

Iowa

PAE
Portland | San Francisco | Seattle
pae-engineers.com

BID SET

EUGENE SCHOOL DISTRICT 4J
120 WEST HILLIEARD AVENUE, EUGENE, OREGON 97404

RIVER ROAD / EL CAMINO DEL RIO ELEMENTARY SCHOOL

VENTILATION SCHEDULE - MECHANICAL

PROJECT #	1337.00
ISSUE DATE:	2.12.2016
DRAWN:	SC
CHECKED:	PIC

REVISIONS

M004

PRINTED ON: 2/11/2016 4:12:20 PM FROM FILE: C:\Revit Local Files\13-1533 MEP15\13-1533 MEP15_karol.kluczynski.rvt

© 2014 PIVOT ARCHITECTURE

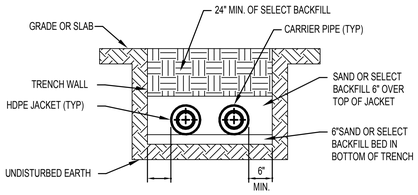

GENERAL NOTES:

1. COORDINATE PIPE DEPTH WITH BUILDING FOOTING DEPTH, AND DEPTHS OF OTHER BUILDING SERVICES.

2 PRE-INSULATED BURIED PIPES
NONE

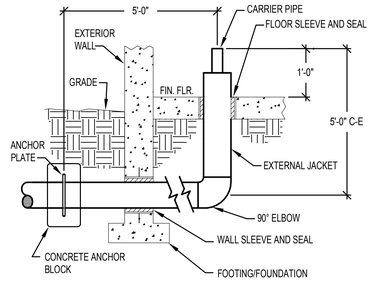

GENERAL NOTES:

1. COORDINATE PIPE DEPTH WITH BUILDING FOOTING DEPTH, AND DEPTHS OF OTHER BUILDING SERVICES.

3 PRE-INSULATED BURIED PIPES
NONE

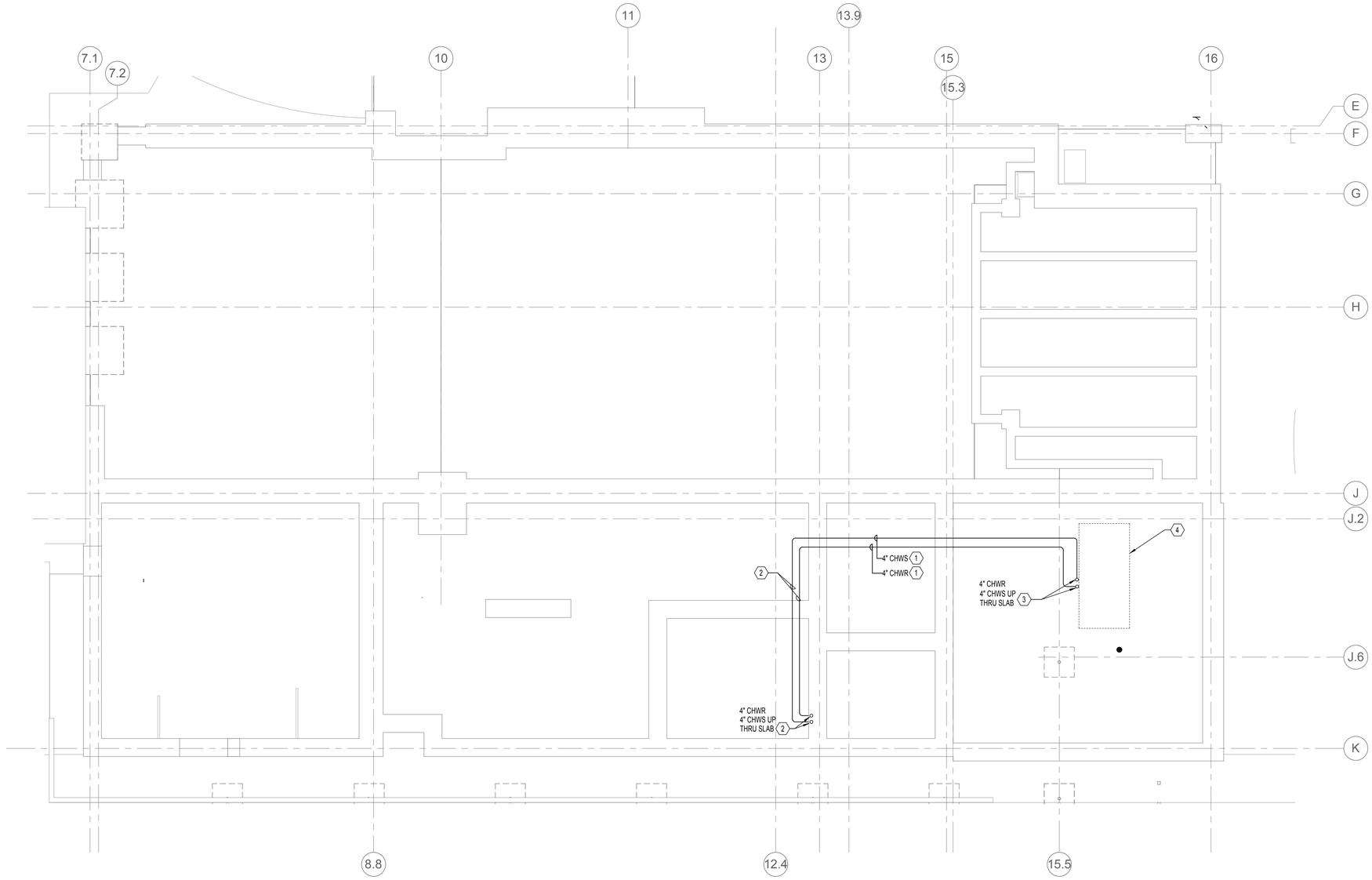

1 UNDERGROUND PLAN - SECTOR C - MECHANICAL
1/8" = 1'-0"

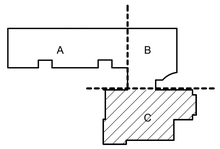

KEY PLAN

GENERAL NOTES:

A. COORDINATE W.OTHER TRADES. PROVIDE NECESSARY OFFSETS AND ROUTE CHANGES.

B. VERIFY ALL EQUIPMENT CONNECTIONS WITH MANUFACTURER'S CERTIFIED DRAWINGS. VERIFY AND PROVIDE DUCT TRANSITIONS TO FURNISHED EQUIPMENT. FIELD VERIFY AND COORDINATE ALL DIMENSIONS BEFORE FABRICATION.

C. ALL DETAILS APPLY TO THIS SHEET WHETHER TAGGED OR NOT.

NOTES:

1. SEE D2/M105 FOR PRE-INSULATED CHILLED WATER PIPE INSTALLATION BELOW GRADE.

2. D1/M105 FOR PRE-INSULATED CHILLED WATER PIPE UNDER SLAB.

3. PROVIDE HEAT TRACE FOR EXPOSED CHILLED WATER PIPING AT CHILLER. PROVIDE DOWN TO FROST LINE.

4. COORDINATE HOUSEKEEPING PAD SIZE TO MEET MANUFACTURER'S REQUIREMENTS.

PIVOT ARCHITECTURE

REGISTERED PROFESSIONAL ENGINEER 18329PE OREGON JANUARY 15, 1986 DOUGLAS P. COLLINS 2-8-2016 EXPIRES 12-31-17

IBI GROUP

Iowa

PAE Portland | San Francisco | Seattle pae-engineers.com

BID SET

4J EUGENE SCHOOL DISTRICT 4J
120 WEST HILLYARD AVENUE, EUGENE, OREGON 97404

RIVER ROAD / EL CAMINO DEL RIO ELEMENTARY SCHOOL

SECTOR C MECHANICAL PLAN - UNDERGROUND

PROJECT #	1337.00
ISSUE DATE:	2.12.2016
DRAWN:	SC
CHECKED:	PVC

REVISIONS

M105

PRINTED ON: 2/11/2016 4:12:23 PM FROM FILE: C:\Revit Local Files\13-1533 MEP15\13-1533 MEP15_karol kluczynski.rvt

© 2014 PIVOT ARCHITECTURE

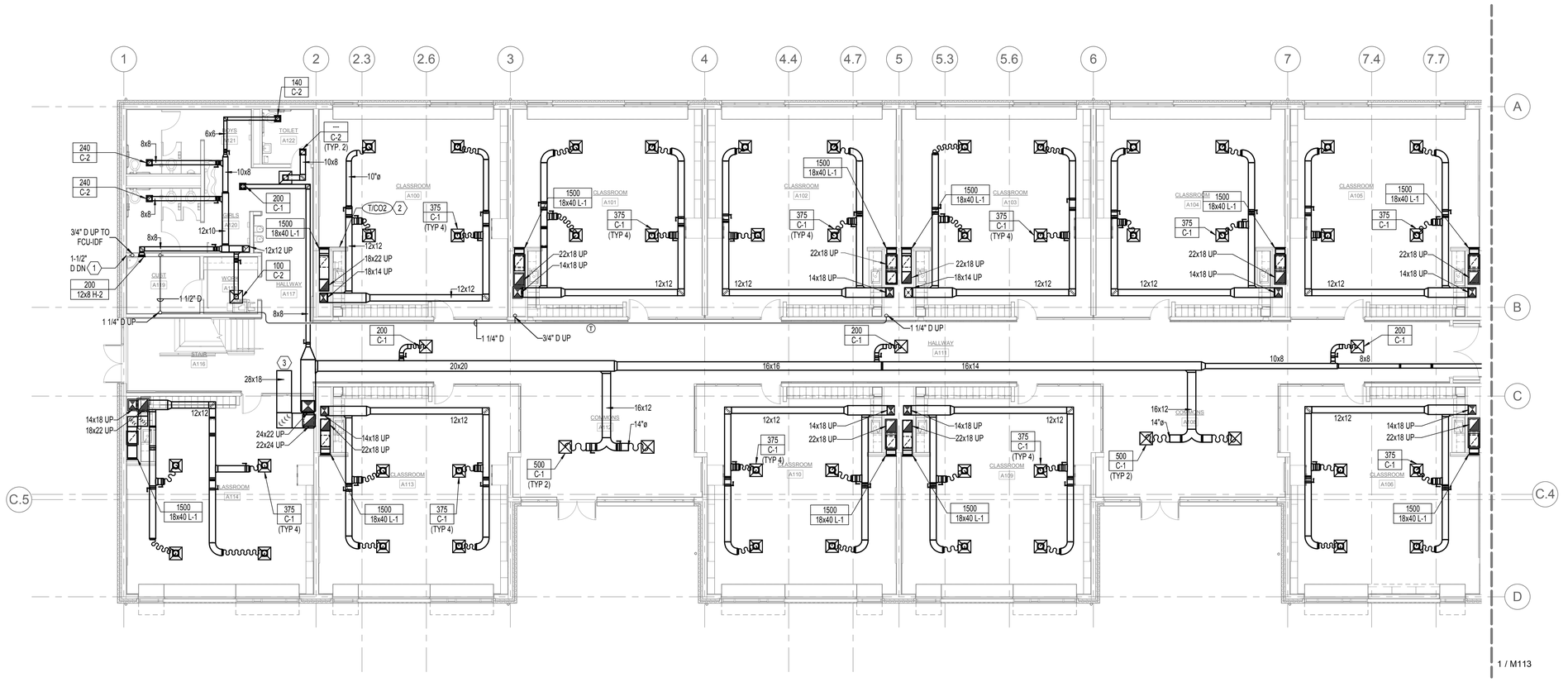

1 FLOOR PLAN - FIRST FLOOR SECTOR A - MECHANICAL

1/8" = 1'-0"

NORTH

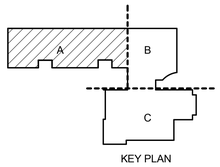

KEY PLAN

GENERAL NOTES:

A. BRANCH RUNOUT PIPING TO TU HEATING COILS AND CABINET UNIT HEATERS TO BE 3/4-INCH UNLESS OTHERWISE NOTED.

B. PROVIDE VOLUME DAMPER AT EACH BRANCH OUTLET/INLET.

C. RUN DUCTS AND PIPING CONCEALED, UNLESS SPECIFIED OTHERWISE. AND CLEAR OF CEILING INSERTS. ALL DUCTWORK SHALL BE INSTALLED AS CLOSE AS POSSIBLE TO WALL AND UNDERSIDE OF BEAMS AND JOISTS.

D. ALL WORK SHALL BE COORDINATED WITH ALL TRADES INVOLVED. OFFSETS IN PIPING AND DUCTS (INCLUDING DIVIDED DUCTS) AND TRANSITIONS AROUND OBSTRUCTIONS SHALL BE PROVIDED AT NO ADDITIONAL COST TO THE OWNER.

E. VERIFY ALL EQUIPMENT CONNECTIONS WITH MANUFACTURER'S CERTIFIED DRAWINGS. VERIFY AND PROVIDE DUCT TRANSITIONS TO FURNISHED EQUIPMENT. FIELD VERIFY AND COORDINATE ALL DIMENSIONS BEFORE FABRICATION.

F. REFER TO ARCHITECTURAL REFLECTED CEILING PLANS FOR EXACT LOCATIONS OF AIR DEVICES.

G. ALL DETAILS APPLY TO THIS SHEET WHETHER TAGGED OR NOT.

H. PIPING SHALL BE LARGEST SIZE SHOWN UNTIL SMALLER PIPE SIZE IS INDICATED INCLUDING MAINS AND BRANCH PIPING.

NOTES:

1. ROUTE CONDENSATE DRAIN LINE IN WALL. TERMINATE ABOVE MOP SINK. PROVIDE ID PLATE READING "CONDENSATE DRAINAGE FROM COOLING EQUIPMENT ABOVE".

2. TEMPERATURE SENSOR/CO2 SENSOR LOCATION TYPICAL OF ALL LEVEL 1 CLASSROOMS.

3. OPEN ENDED RETURN ABOVE CEILING.

PIVOT ARCHITECTURE

REGISTERED PROFESSIONAL ENGINEER 18329PE OREGON NOV 15, 1994 THOMAS P. COLLINS

EXPIRES 12-31-17

IBI GROUP

PAE Portland | San Francisco | Seattle pae-engineers.com

BID SET

4J EUGENE SCHOOL DISTRICT 4J
120 WEST HILLEARD AVENUE, EUGENE, OREGON 97404

RIVER ROAD / EL CAMINO DEL RIO ELEMENTARY SCHOOL

SECTOR A MECHANICAL PLAN - FIRST FLOOR

PROJECT #	1337.00
ISSUE DATE:	2.12.2016
DRAWN:	SC
CHECKED:	PIC

REVISIONS

M111

PRINTED ON: 2/11/2016 4:12:29 PM FROM FILE: C:\Revit Local Files\13-1533 MEP15\13-1533 MEP15_karol.kluczynski.rvt

© 2014 PIVOT ARCHITECTURE

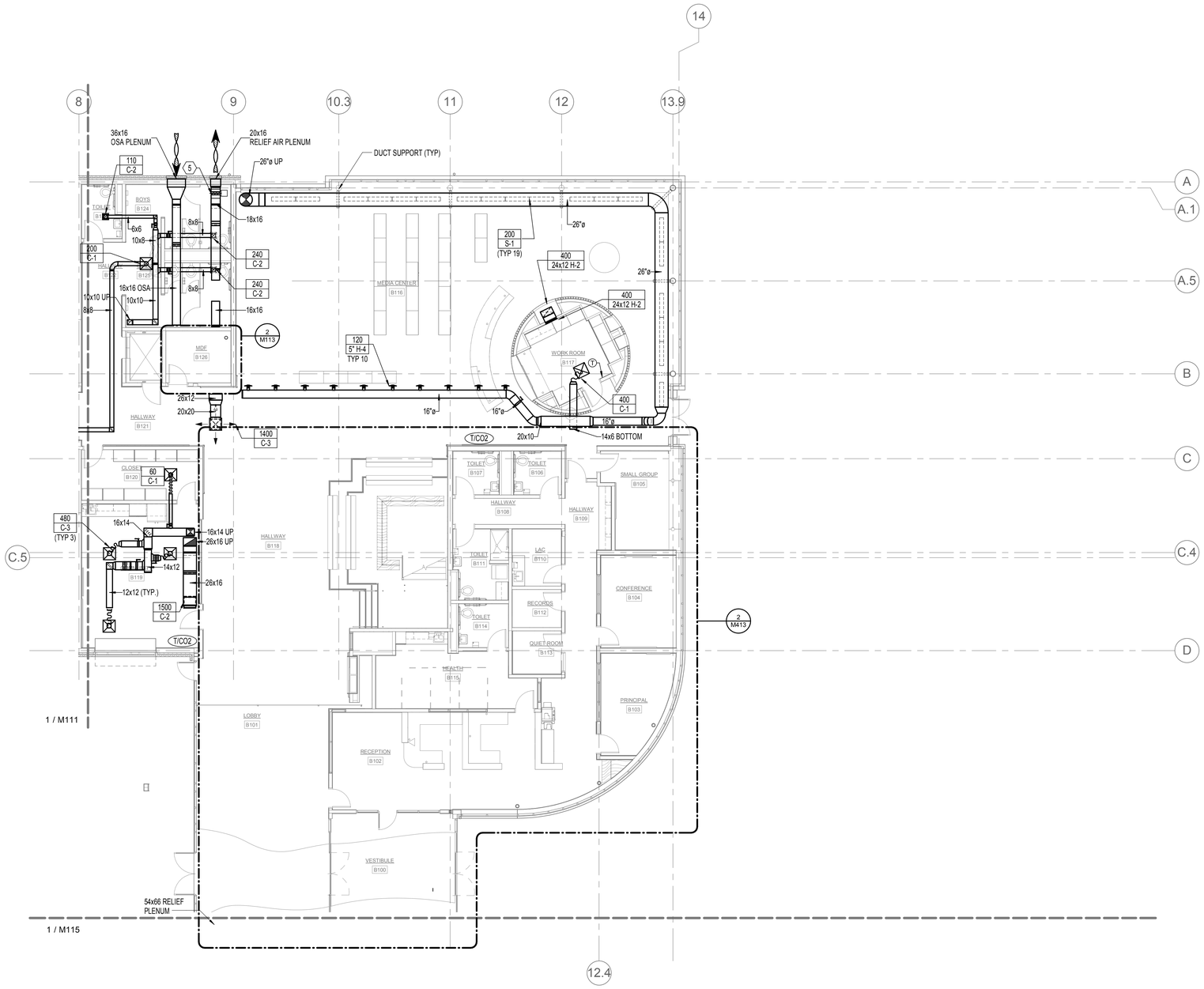

1 FLOOR PLAN - FIRST FLOOR SECTOR B - MECHANICAL
1/8" = 1'-0"

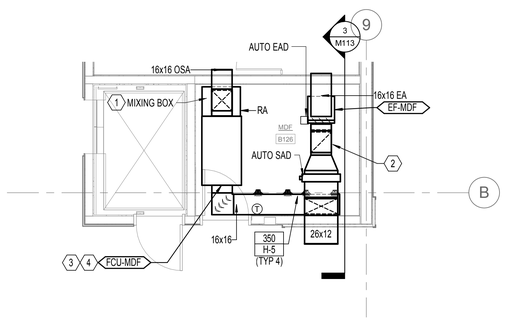

2 ENLARGED FLOOR PLAN - FIRST FLOOR SECTOR B MDF ROOM - MECHANICAL
1/4" = 1'-0"

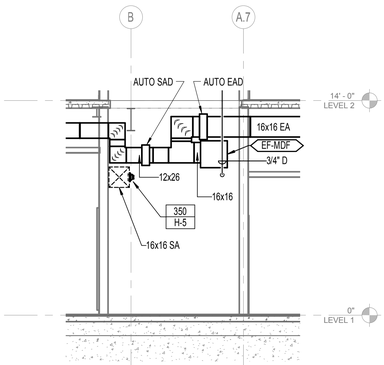

3 MDF B126 LOOKING WEST
1/4" = 1'-0"

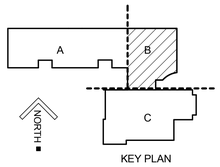

KEY PLAN

GENERAL NOTES:

A. BRANCH RUNOUT PIPING TO TU HEATING COILS AND CABINET UNIT HEATERS TO BE 3/4-INCH UNLESS OTHERWISE NOTED.

B. PROVIDE VOLUME DAMPER AT EACH BRANCH OUTLET/INLET.

C. RUN DUCTS AND PIPING CONCEALED, UNLESS SPECIFIED OTHERWISE, AND CLEAR OF CEILING INSERTS. ALL DUCTWORK SHALL BE INSTALLED AS CLOSE AS POSSIBLE TO WALL AND UNDERSIDE OF BEAMS AND JOISTS.

D. ALL WORK SHALL BE COORDINATED WITH ALL TRADES INVOLVED. OFFSETS IN PIPING AND DUCTS (INCLUDING DIVIDED DUCTS) AND TRANSITIONS AROUND OBSTRUCTIONS SHALL BE PROVIDED AT NO ADDITIONAL COST TO THE OWNER.

E. VERIFY ALL EQUIPMENT CONNECTIONS WITH MANUFACTURER'S CERTIFIED DRAWINGS. VERIFY AND PROVIDE DUCT TRANSITIONS TO FURNISHED EQUIPMENT. FIELD VERIFY AND COORDINATE ALL DIMENSIONS BEFORE FABRICATION.

F. REFER TO ARCHITECTURAL REFLECTED CEILING PLANS FOR EXACT LOCATIONS OF AIR DEVICES.

G. ALL DETAILS APPLY TO THIS SHEET WHETHER TAGGED OR NOT.

H. PIPING SHALL BE LARGEST SIZE SHOWN UNTIL SMALLER PIPE SIZE IS INDICATED INCLUDING MAINS AND BRANCH PIPING.

NOTES:

1. OAD ON TOP OF MIXING BOX. RAD ON SIDE. ACTUATION BY CONTROLS CONTRACTOR.

2. EXHAUST CONNECTS TO TOP OF EXHAUST FAN DISCHARGE, THEN TURNS NORTH. PROVIDE CONTROL DAMPER IN SUPPLY AND EXHAUST.

3. COORDINATE HVAC EQUIPMENT LAYOUT IN MDF ROOM WITH HOT AISLE/COLD AISLE SERVER ARRANGEMENT. TYP FOR IDF ROOMS.

4. PROVIDE CONDESATE PUMP. CONNECT TO OTHER GRAVITY CONDENSATE LINES NEARBY. ROUTE RS AND RL PIPING FROM FCU ABOVE HALLWAY CEILING AND UP TO CLOSEST AVAILABLE SHAFT TO ACCU-MDF IN MECHANICAL PLATFORM.

5. 18X18 CEILING ACCESS TO AUTO DAMPER

PIVOT ARCHITECTURE

REGISTERED PROFESSIONAL ENGINEER 18329PE OREGON NOV 15 1994 NICHOLAS P. COLLINS
EXPIRES 12-31-17

IBI GROUP

PAE
Portland | San Francisco | Seattle
pae-engineers.com

BID SET
4J
EUGENE SCHOOL DISTRICT 4J
120 WEST HILLEARD AVENUE, EUGENE, OREGON 97404
RIVER ROAD / EL CAMINO DEL RIO ELEMENTARY SCHOOL

SECTOR B MECHANICAL PLAN - FIRST FLOOR

PROJECT #	1337.00
ISSUE DATE:	2.12.2016
DRAWN:	SC
CHECKED:	PSC

REVISIONS

M113

PRINTED ON: 2/11/2016 4:12:37 PM FROM FILE: C:\Revit Local Files\13-1533 MEP15\13-1533 MEP15_karol.klaczynski.rvt

© 2014 PIVOT ARCHITECTURE

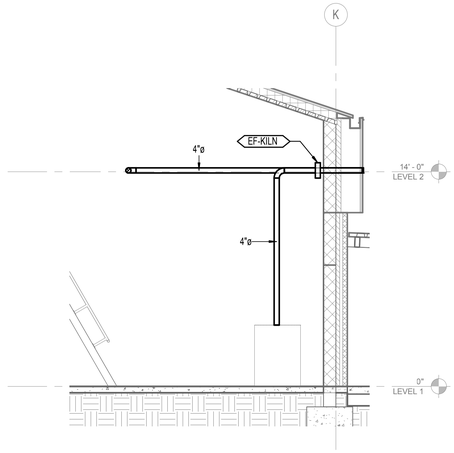

2 Section EF-C-DRYER SECTION DETAIL
1/4" = 1'-0"

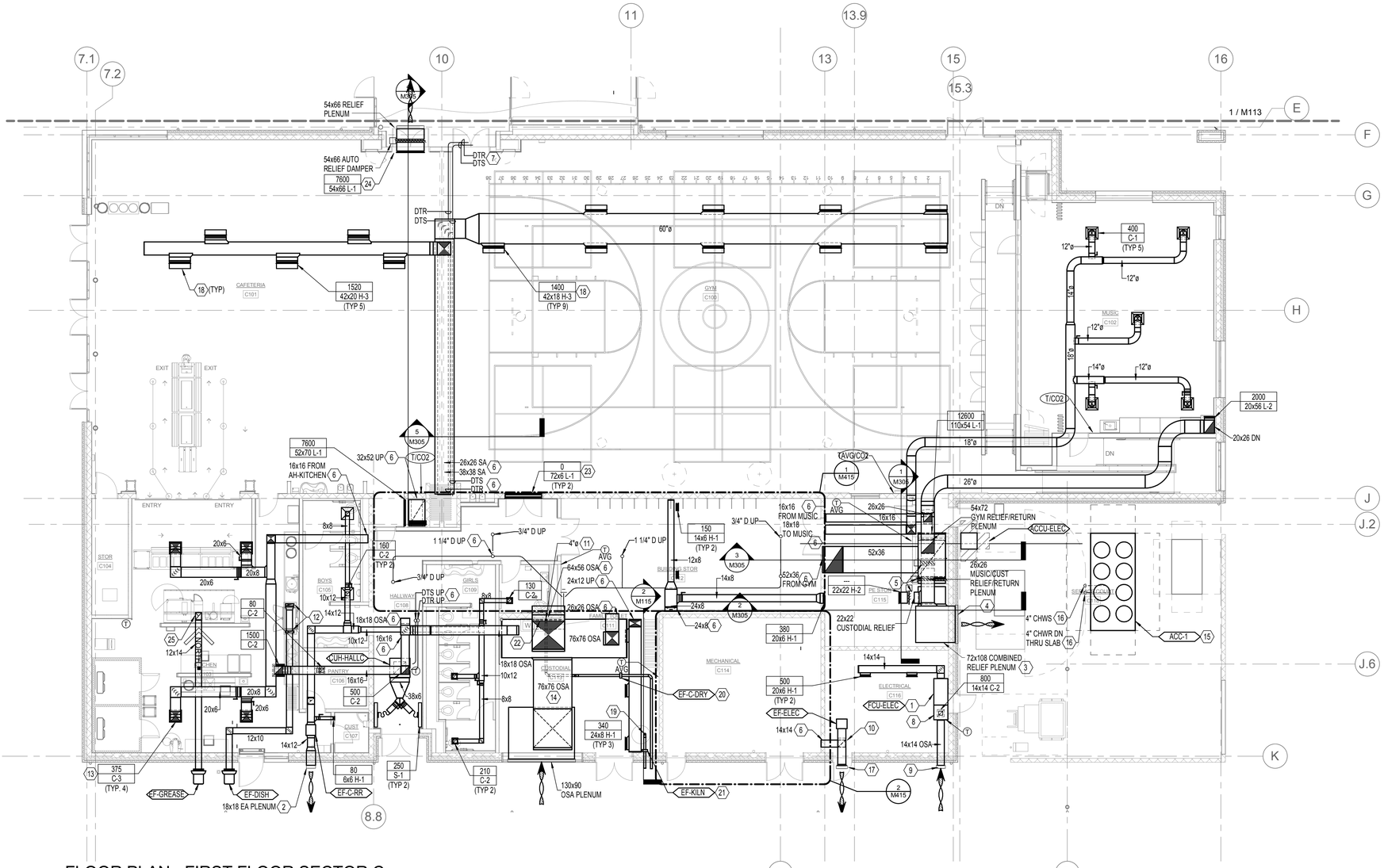

1 FLOOR PLAN - FIRST FLOOR SECTOR C - MECHANICAL
1/8" = 1'-0"

GENERAL NOTES:

A. BRANCH RUNOUT PIPING TO TU HEATING COILS AND CABINET UNIT HEATERS TO BE 3/4-INCH UNLESS OTHERWISE NOTED.

B. PROVIDE VOLUME DAMPER AT EACH BRANCH OUTLET/INLET.

C. RUN DUCTS AND PIPING CONCEALED, UNLESS SPECIFIED OTHERWISE, AND CLEAR OF CEILING INSERTS. ALL DUCTWORK SHALL BE INSTALLED AS CLOSE AS POSSIBLE TO WALL AND UNDERSIDE OF BEAMS AND JOISTS.

D. ALL WORK SHALL BE COORDINATED WITH ALL TRADES INVOLVED. OFFSETS IN PIPING AND DUCTS (INCLUDING DIVIDED DUCTS) AND TRANSITIONS AROUND OBSTRUCTIONS SHALL BE PROVIDED AT NO ADDITIONAL COST TO THE OWNER.

E. VERIFY ALL EQUIPMENT CONNECTIONS WITH MANUFACTURER'S CERTIFIED DRAWINGS. VERIFY AND PROVIDE DUCT TRANSITIONS TO FURNISHED EQUIPMENT. FIELD VERIFY AND COORDINATE ALL DIMENSIONS BEFORE FABRICATION.

F. REFER TO ARCHITECTURAL REFLECTED CEILING PLANS FOR EXACT LOCATIONS OF AIR DEVICES.

G. ALL DETAILS APPLY TO THIS SHEET WHETHER TAGGED OR NOT.

H. PIPING SHALL BE LARGEST SIZE SHOWN UNTIL SMALLER PIPE SIZE IS INDICATED INCLUDING MAINS AND BRANCH PIPING.

NOTES:

1. ROUTE RS AND RL PIPING INDOORS, ALONG EAST WALL OF PE STORAGE.

2. LOCATE ABOVE CANOPY.

3. PROVIDE HORIZONTAL SHEET METAL SEPARATION, LOCATED 82 INCHES FROM BOTTOM OF PLENUM. GYM RELIEF CONNECTED TO LOWER ~82 INCHES OF PLENUM. MUSIC ROOM AND CUSTODIAL RELIEF CONNECTED TO UPPER 26 INCHES OF PLENUM.

4. RELIEF LOUVER TO BE DIVIDED HORIZONTALY BY SHEET METAL SEPARATION LOCATED ~82 INCHES FROM BOTTOM OF LOUVER AS DESCRIBED BY NOTE 3.

5. PROVIDE AUTOMATIC CONTROL DAMPER AND BACK DRAFT DAMPER.

6. CONTINUED ON 1/M415.

7. CONTINUED ON M413.

8. MIXING BOX 14x14 WITH RETURN AND OSA AUTO DAMPER. RETURN GRILLE ON BOTTOM, AT DAMPER.

9. 26x18 OSA PLENUM AT LOUVER. 18" PLENUM DEPTH.

10. MIXING BOX WITH 14x14 RELIEF AND SUPPLY DAMPER.

11. 4" DRYER EXHAUST UP.

12. 4x16 EXHAUST DUCT CONNECTION TO DISHWASHER HOOD (TYP. 2). 200 CFM AT ENTRY SIDE, 400 CFM AT EXIT SIDE. PROVIDE VOLUME DAMPER AT EACH DUCT.

13. DIFFUSER SIZED TO LIMIT AIR VELOCITY TO 150 FPM AT DISCHARGE. PROVIDE LINED PLENUM. SEE DETAIL 6/M501.

14. ROUTE ABOVE BETWEEN TRUSSES.

15. ACC-1 COMPRESSOR SECTION TO BE ORIENTED FACING SOUTH.

16. PROVIDE HEAT TAPE ON EXPOSED CHWR/S FROM FROSTLINE TO POINT OF CHILLER CONNECTION.

17. 18x18 RELIEF PLENUM. 18" PLENUM DEPTH.

18. INSTALL DRUM LOUVER AT 30 DEGREE ANGLE DOWN.

19. 4" EXHAUST DUCT DN TO KILN.

20. TERMINATE AT DOWNTURNED ELBOW. PROVIDE BACKDRAFT DAMPER W/O SCREEN.

21. TERMINATE AT DOWNTURNED ELBOW W/ SCREEN.

22. EF-C-DRY ANNUNCIATOR PANEL.

23. MOUNT GRILLE ABOVE DOORS.

24. MOUNT W/ BOTTOM OF GRILLE AT 10 FT AFF. PROVIDE HINGED FRAME FOR GRILLE TO ENABLE ACCESS TO RELIEF DAMPER AND ACTUATOR LOCATED BEHIND GRILLE.

25. 12X14 GREASE EXHAUST CONNECTION AT HOOD. SLOPE DUCT FROM FAN TO HOOD. PROVIDE DUCT CLEANOUTS AS REQUIRED BY CODE.

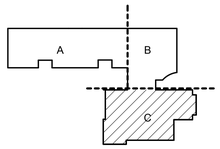

KEY PLAN

PIVOT ARCHITECTURE

REGISTERED PROFESSIONAL ENGINEER 18329PE OREGON JANUARY 15, 1982 DOUGLAS P. COLLINS
EXPIRES 12-31-17

IBI GROUP

Jones

PAE
Portland | San Francisco | Seattle
pae-engineers.com

BID SET
4J
EUGENE SCHOOL DISTRICT 4J
120 WEST HILLEARD AVENUE, EUGENE, OREGON 97404
RIVER ROAD / EL CAMINO DEL RIO ELEMENTARY SCHOOL

SECTOR C MECHANICAL PLAN - FIRST FLOOR

PROJECT #	13373.00
ISSUE DATE:	2.12.2016
DRAWN:	SC
CHECKED:	PSC

REVISIONS:

M115

PRINTED ON: 2/11/2016 4:12:44 PM FROM FILE: C:\Revit Local Files\13-1533 MEP15\13-1533 MEP15_karol.kliczynski.rvt

© 2014 PIVOT ARCHITECTURE

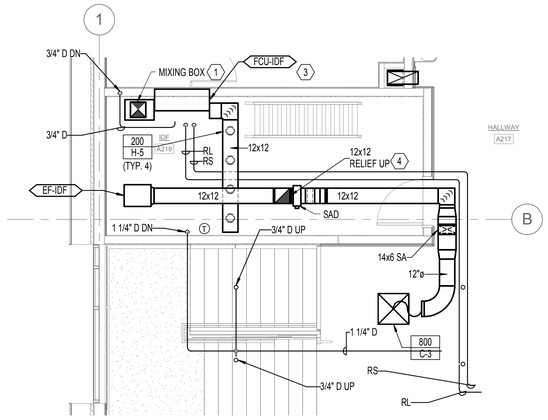

2 ENLARGED FLOOR PLAN - SECOND FLOOR SECTOR A IDF ROOM - MECHANICAL

1/4" = 1'-0"

NORTH

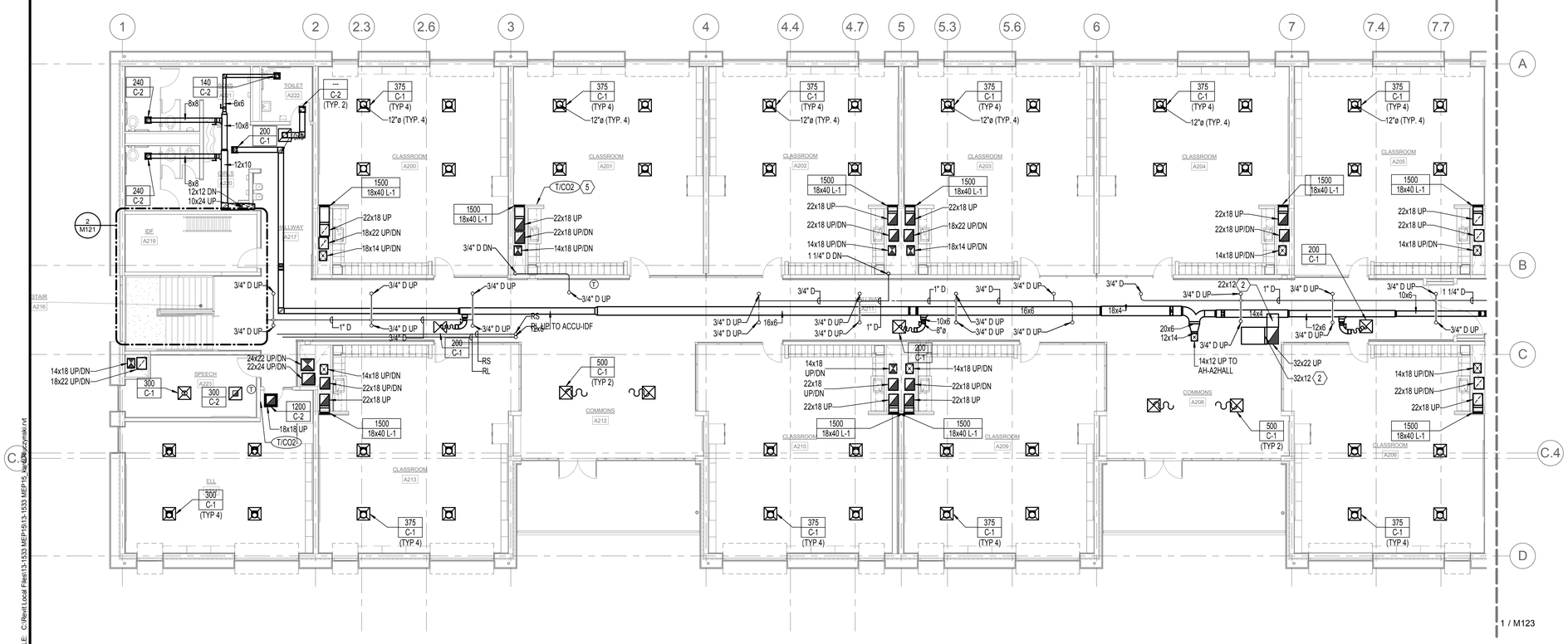

1 FLOOR PLAN - SECOND FLOOR SECTOR A - MECHANICAL

1/8" = 1'-0"

NORTH

GENERAL NOTES:

A. BRANCH RUNOUT PIPING TO TU HEATING COILS AND CABINET UNIT HEATERS TO BE 3/4-INCH UNLESS OTHERWISE NOTED.

B. PROVIDE VOLUME DAMPER AT EACH BRANCH OUTLET/INLET.

C. RUN DUCTS AND PIPING CONCEALED, UNLESS SPECIFIED OTHERWISE, AND CLEAR OF CEILING INSERTS. ALL DUCTWORK SHALL BE INSTALLED AS CLOSE AS POSSIBLE TO WALL AND UNDERSIDE OF BEAMS AND JOISTS.

D. ALL WORK SHALL BE COORDINATED WITH ALL TRADES INVOLVED. OFFSETS IN PIPING AND DUCTS (INCLUDING DIVIDED DUCTS) AND TRANSITIONS AROUND OBSTRUCTIONS SHALL BE PROVIDED AT NO ADDITIONAL COST TO THE OWNER.

E. VERIFY ALL EQUIPMENT CONNECTIONS WITH MANUFACTURER'S CERTIFIED DRAWINGS. VERIFY AND PROVIDE DUCT TRANSITIONS TO FURNISHED EQUIPMENT. FIELD VERIFY AND COORDINATE ALL DIMENSIONS BEFORE FABRICATION.

F. REFER TO ARCHITECTURAL REFLECTED CEILING PLANS FOR EXACT LOCATIONS OF AIR DEVICES.

G. ALL DETAILS APPLY TO THIS SHEET WHETHER TAGGED OR NOT.

H. PIPING SHALL BE LARGEST SIZE SHOWN UNTIL SMALLER PIPE SIZE IS INDICATED INCLUDING MAINS AND BRANCH PIPING.

NOTES:

1. 12x12 OAD ON TOP OF MIXING BOX, RAD ON BACK SIDE. ACTUATION BY CONTROLS CONTRACTOR.

2. OPEN ENDED DUCT ABOVE CLOUD CEILING.

3. COORDINATE HVAC EQUIPMENT LAYOUT IN MDF ROOM WITH HOT AISLE/COLD AISLE SERVER ARRANGEMENT. TYP FOR IDF ROOMS.

4. AUTO RELIEF AIR DAMPER IN VERTICAL DUCT.

5. LOCATION OF TEMPERATURE SENSOR/CO2 SENSOR TYPICAL LEVEL 2 CLASSROOMS.

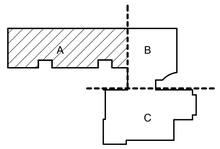

KEY PLAN

PIVOT ARCHITECTURE

REGISTERED PROFESSIONAL ENGINEER
18329PE
OREGON
JANUARY 15, 1988
THOMAS P. COLLINS
EXPIRES 12-31-17

IBI GROUP

PAE
Portland | San Francisco | Seattle
pae-engineers.com

BID SET

4J
EUGENE SCHOOL DISTRICT 4J
120 WEST HILLYARD AVENUE, EUGENE, OREGON 97404

RIVER ROAD / EL CAMINO DEL RIO ELEMENTARY SCHOOL

SECTOR A MECHANICAL PLAN - SECOND FLOOR

PROJECT #	1337.00
ISSUE DATE:	2.12.2016
DRAWN:	SC
CHECKED:	PIC
REVISIONS:	

M121

PRINTED ON: 2/11/2016 4:12:51 PM FROM FILE: C:\Revit Local Files\13-1533 MEP15\13-1533 MEP15_kaczynski.rvt

© 2014 PIVOT ARCHITECTURE

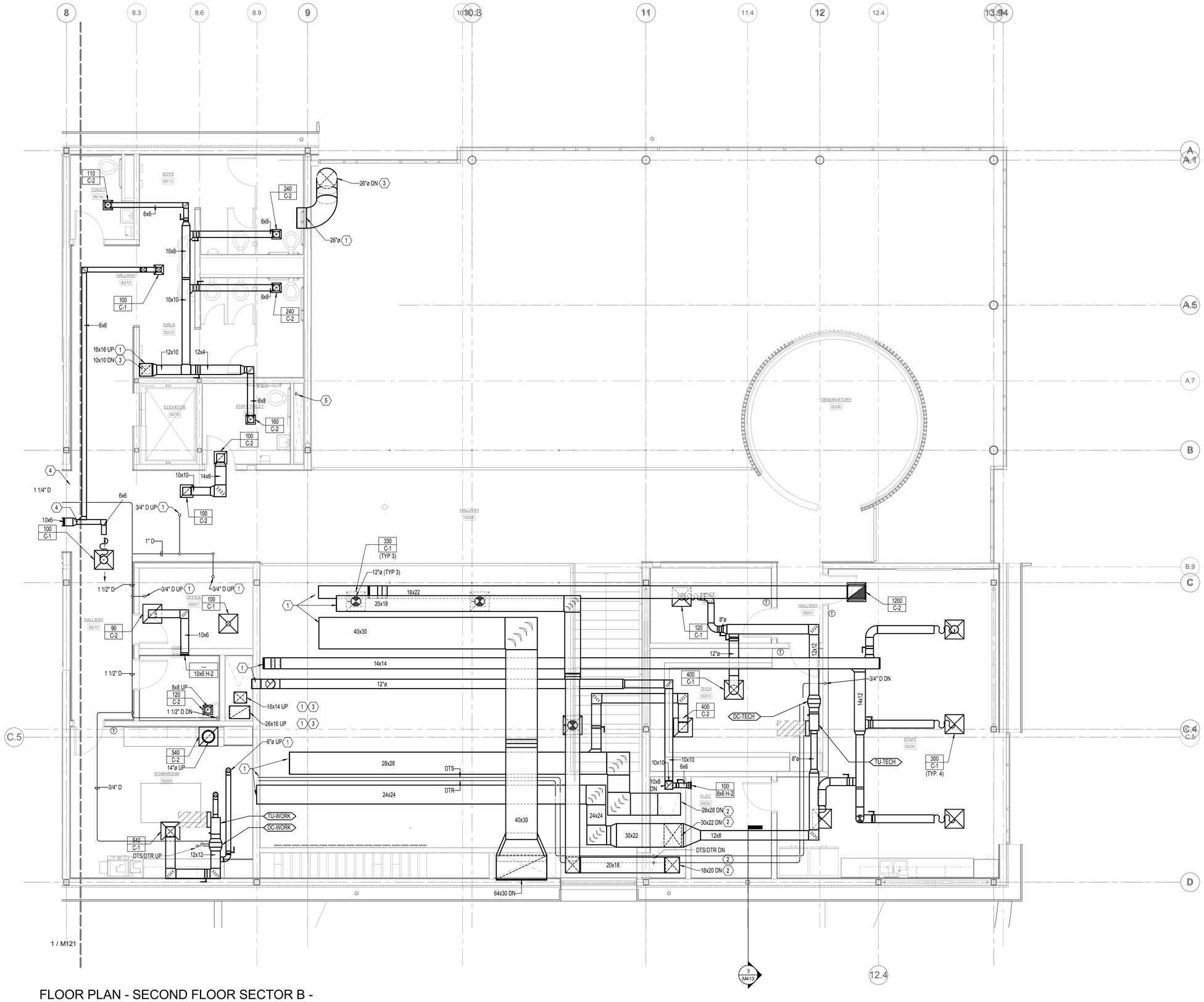

1 FLOOR PLAN - SECOND FLOOR SECTOR B - MECHANICAL

1/4" = 1'-0"

GENERAL NOTES:

A. BRANCH RUNOUT PIPING TO TU HEATING COILS AND CABINET UNIT HEATERS TO BE 3/4-INCH UNLESS OTHERWISE NOTED.

B. PROVIDE VOLUME DAMPER AT EACH BRANCH OUTLET/INLET.

C. RUN DUCTS AND PIPING CONCEALED, UNLESS SPECIFIED OTHERWISE, AND CLEAR OF CEILING INSERTS. ALL DUCTWORK SHALL BE INSTALLED AS CLOSE AS POSSIBLE TO WALL AND UNDERSIDE OF BEAMS AND JOISTS.

D. ALL WORK SHALL BE COORDINATED WITH ALL TRADES INVOLVED. OFFSETS IN PIPING AND DUCTS (INCLUDING DIVIDED DUCTS) AND TRANSITIONS AROUND OBSTRUCTIONS SHALL BE PROVIDED AT NO ADDITIONAL COST TO THE OWNER.

E. VERIFY ALL EQUIPMENT CONNECTIONS WITH MANUFACTURER'S CERTIFIED DRAWINGS. VERIFY AND PROVIDE DUCT TRANSITIONS TO FURNISHED EQUIPMENT. FIELD VERIFY AND COORDINATE ALL DIMENSIONS BEFORE FABRICATION.

F. REFER TO ARCHITECTURAL REFLECTED CEILING PLANS FOR EXACT LOCATIONS OF AIR DEVICES.

G. ALL DETAILS APPLY TO THIS SHEET WHETHER TAGGED OR NOT.

H. PIPING SHALL BE LARGEST SIZE SHOWN UNTIL SMALLER PIPE SIZE IS INDICATED INCLUDING MAINS AND BRANCH PIPING.

NOTES:

1. CONTINUED ON 1/M413.
2. CONTINUED ON 2/M413.
3. CONTINUED ON M113.
4. CONTINUED ON M111.
5. PUMPED CONDENSATE DRAIN FROM FCU-MDF TO TERMINATE AT FLOOR SINK ON MECH PLATFORM.

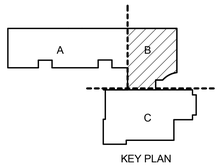

KEY PLAN

NORTH

PIVOT ARCHITECTURE

REGISTERED PROFESSIONAL ENGINEER 18329PE OREGON JANUARY 15, 1988 DOUGLAS P. COLLINS

EXPIRES 12-31-17

IBI GROUP

Iowa

PAE Portland | San Francisco | Seattle pae-engineers.com

BID SET

EUGENE SCHOOL DISTRICT 4J
120 WEST HILLEARD AVENUE, EUGENE, OREGON 97404

RIVER ROAD / EL CAMINO DEL RIO ELEMENTARY SCHOOL

SECTOR B MECHANICAL PLAN - SECOND FLOOR

PROJECT #	1337.00
ISSUE DATE:	2.12.2016
DRAWN:	SC
CHECKED:	PIC

REVISIONS:

M123

PRINTED ON: 2/11/2016 4:12:57 PM FROM FILE: C:\Revit Local Files\13-1533 MEP15\13-1533 MEP15_karol.kluczynski.rvt

© 2014 PIVOT ARCHITECTURE

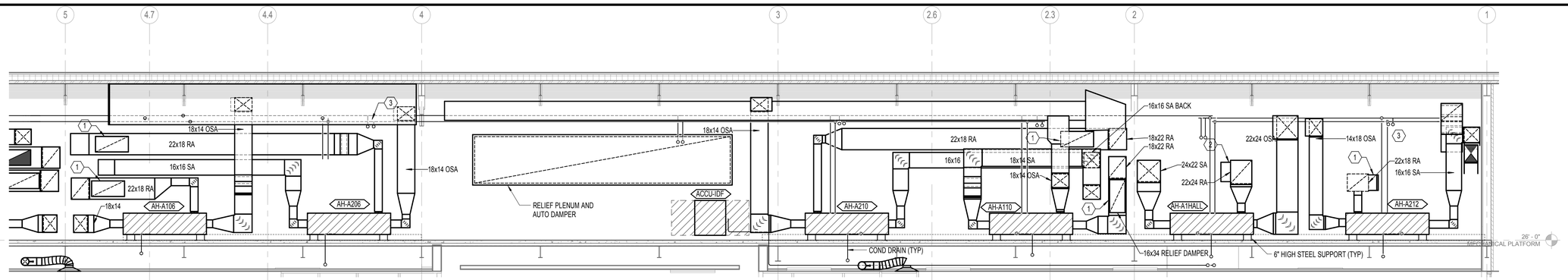

1 SECTOR A SOUTH PLATFORM E-W LOOKING SOUTH
1/4" = 1'-0"

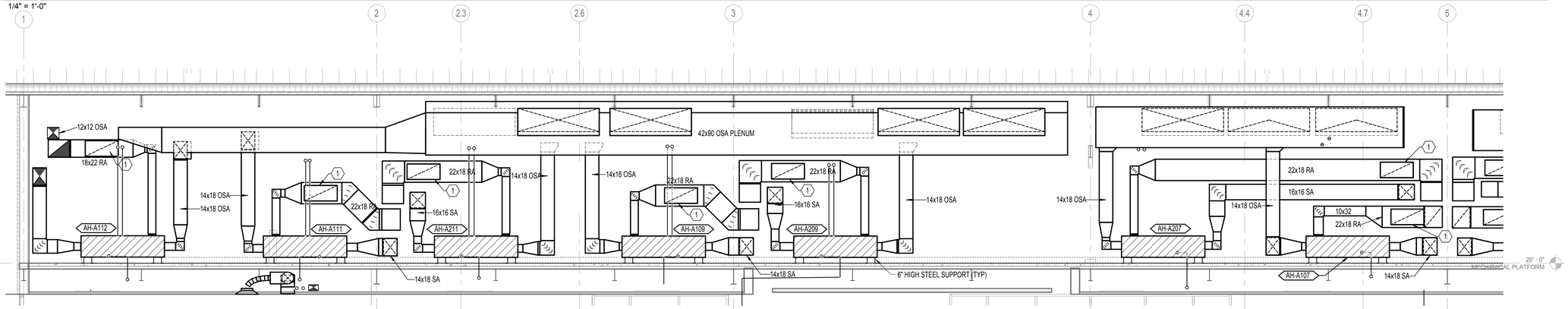

2 SECTOR A NORTH PLATFORM E-W LOOKING NORTH
1/4" = 1'-0"

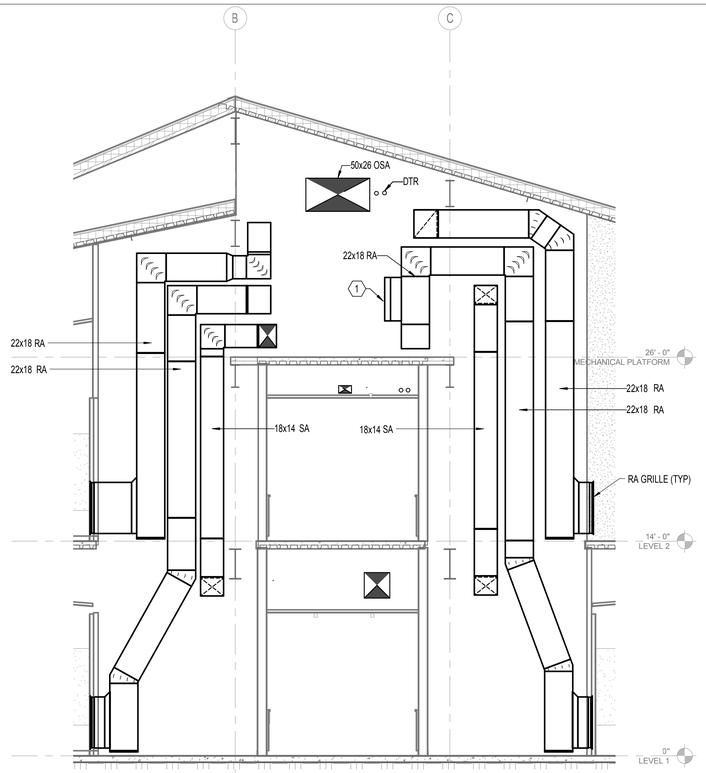

3 SECTOR A SHAFT LOOKING EAST
1/4" = 1'-0"

NOTES:

1. 16x34 AUTO RELIEF DAMPER AND BACKDRAFT DAMPER.
2. 20x36 AUTO RELIEF DAMPER AND BACKDRAFT DAMPER.
3. DTS, DTR RUNOUTS TO AIR HANDLER, TYP.

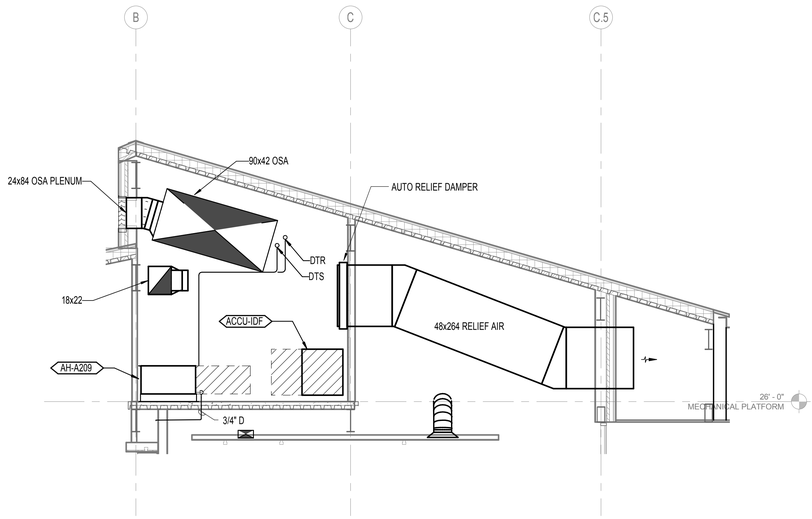

4 SECTOR A RELIEF AIR
1/4" = 1'-0"

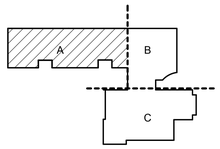

KEY PLAN

PIVOT ARCHITECTURE

REGISTERED PROFESSIONAL ENGINEER
18329PE
OREGON
NICHOLAS P. COLLOCA
EXPIRES 12-31-17

IBI GROUP

PAE
Portland | San Francisco | Seattle
pae-engineers.com

BID SET

EUGENE SCHOOL DISTRICT 4J
120 WEST HILLEARD AVENUE, EUGENE, OREGON 97404

RIVER ROAD / EL CAMINO DEL RIO ELEMENTARY SCHOOL

SECTIONS - MECHANICAL

PROJECT #	1337.00
ISSUE DATE	2.12.2016
DRAWN	SC
CHECKED	PIC

REVISIONS

M301

PRINTED ON: 2/11/2016 4:13:04 PM FROM FILE: C:\Revit Local Files\13-1533 MEP15\13-1533 MEP15_karol.kluczynski.rvt

© 2014 PIVOT ARCHITECTURE

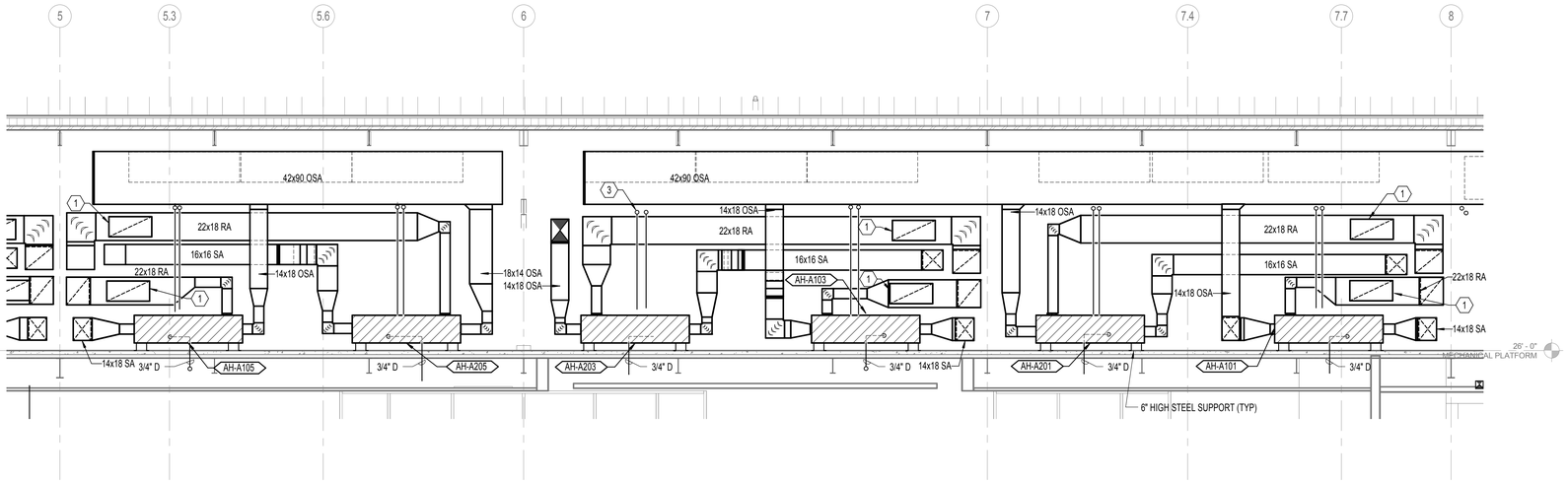

1 SECTOR A NORTH PLATFORM LOOKING NORTH
1/4" = 1'-0"

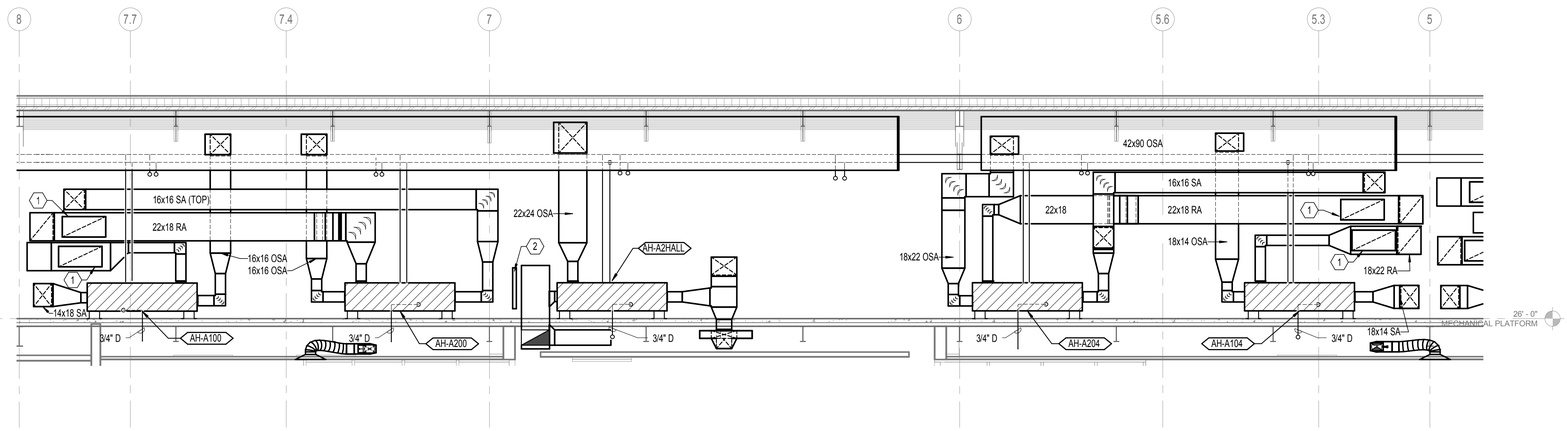

2 SECTOR A SOUTH PLATFORM LOOKING SOUTH
1/4" = 1'-0"

NOTES:

1. 16x34 AUTO RELIEF DAMPER AND BACKDRAFT DAMPER.
2. 24x32 AUTO RELIEF DAMPER AND BACKDRAFT DAMPER.
3. DTS, DTR RUNOUTS TO AIR HANDLER, TYP.

KEY PLAN

PIVOT ARCHITECTURE

REGISTERED PROFESSIONAL ENGINEER 18329PE OREGON JANUARY 15, 1986 NICHOLAS P. COLLOTON 2-12-2016 EXPIRES: 12-31-17

IBI GROUP

Nova

PAE
Portland | San Francisco | Seattle
pae-engineers.com

BID SET

EUGENE SCHOOL DISTRICT 4J
120 WEST HILLYARD AVENUE, EUGENE, OREGON 97404

RIVER ROAD / EL CAMINO DEL RIO ELEMENTARY SCHOOL

SECTIONS- MECHANICAL

PROJECT #	1337.00
ISSUE DATE:	2.12.2016
DRAWN:	SC
CHECKED:	PKC

REVISIONS

M302

PRINTED ON: 2/11/2016 4:13:10 PM FROM FILE: C:\Revit Local Files\13-1533 MEP\15-13-1533 MEP15_karol.kluczynski.rvt

© 2014 PIVOT ARCHITECTURE

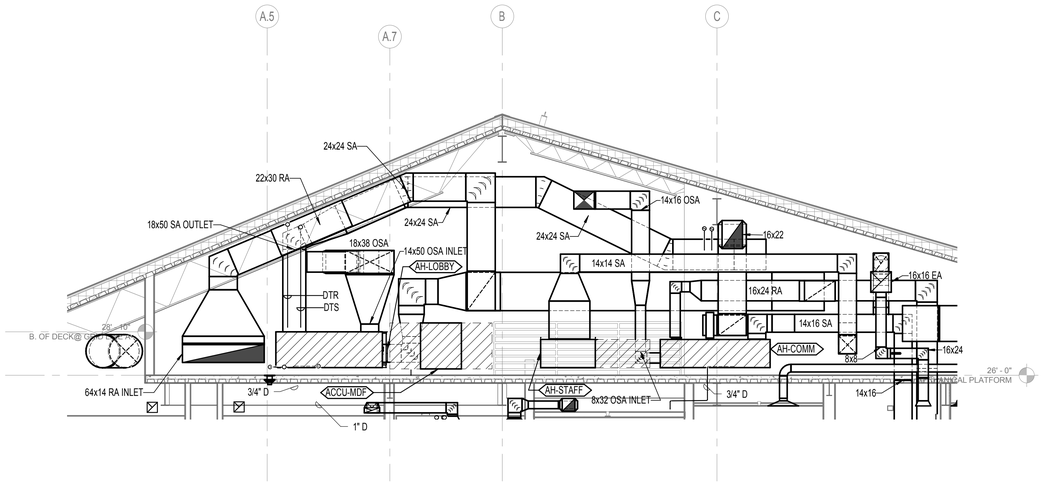

1 SECTOR B EAST PLATFORM LOOKING EAST
1/4" = 1'-0"

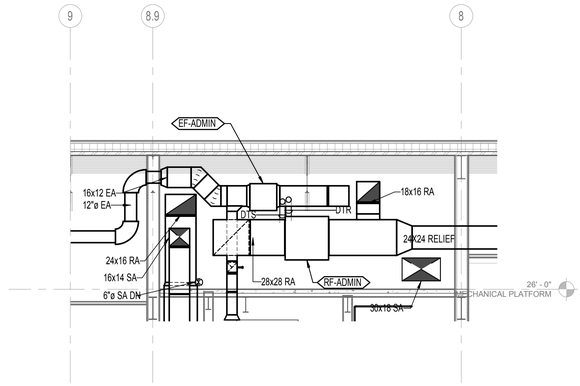

4 SECTOR B SOUTH LOOKING SOUTH
1/4" = 1'-0"

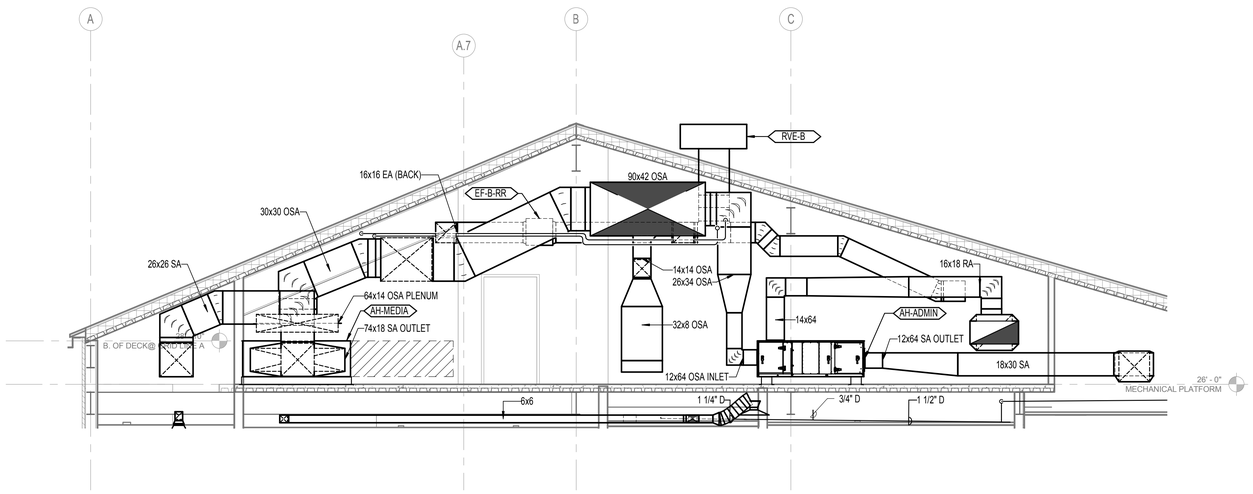

2 SECTOR B WEST PLATFORM LOOKING EAST
1/4" = 1'-0"

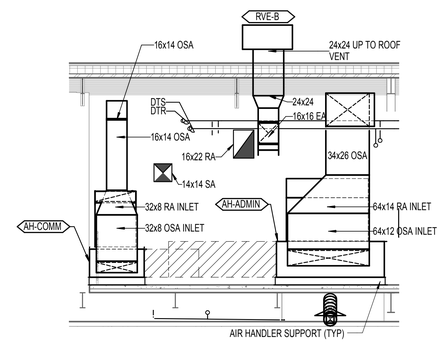

5 SECTOR B SOUTH LOOKING SOUTH 1
1/4" = 1'-0"

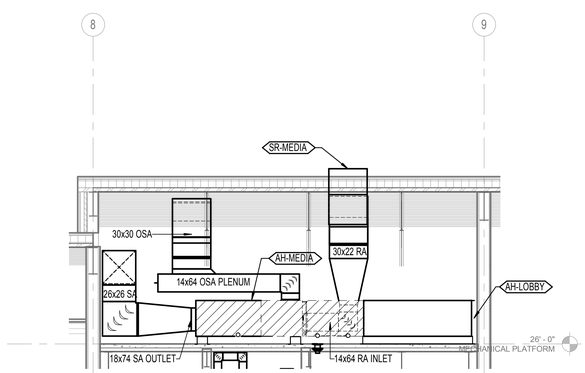

3 SECTOR B AHU-MEDIA LOOKING NORTH
1/4" = 1'-0"

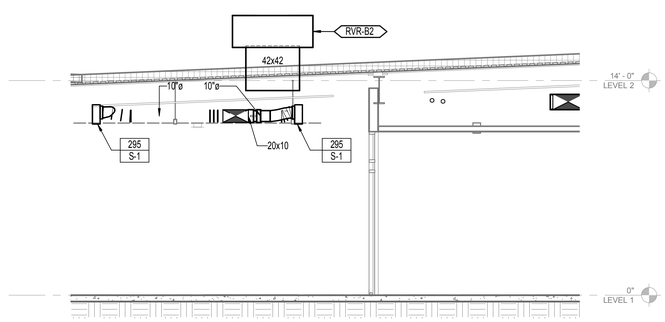

6 SECTOR B ROOF VENT
1/4" = 1'-0"

PIVOT ARCHITECTURE

REGISTERED PROFESSIONAL ARCHITECT 18329PE OREGON DOUGLAS P. COLLIER 2-8-2016 EXPIRES 12-31-17

IBI GROUP

Lowa

PAE Portland | San Francisco | Seattle pae-engineers.com

BID SET

4J EUGENE SCHOOL DISTRICT 4-J
120 WEST HILLEARD AVENUE, EUGENE, OREGON 97404

RIVER ROAD / EL CAMINO DEL RIO ELEMENTARY SCHOOL

SECTIONS - MECHANICAL

PROJECT #	1337.00
ISSUE DATE:	2.12.2016
DRAWN:	SC
CHECKED:	PIC

REVISIONS

M303

PRINTED ON: 2/11/2016 4:13:19 PM FROM FILE: C:\Revit Local Files\13-1533 MEP15\13-1533 MEP15_sand.kluczynski.rvt

© 2014 PIVOT ARCHITECTURE

NOTES:

1. PROVIDE AUTOMATIC CONTROL DAMPER AND BACKDRAFT DAMPER.

2. PROVIDE HORIZONTAL SHEET METAL SEPARATION, LOCATED 82 INCHES FROM BOTTOM OF PLENUM. GYM RELIEF CONNECTED TO LOWER ~82 INCHES OF PLENUM. MUSIC ROOM AND CUSTODIAL RELIEF CONNECTED TO UPPER 26 INCHES OF PLENUM.

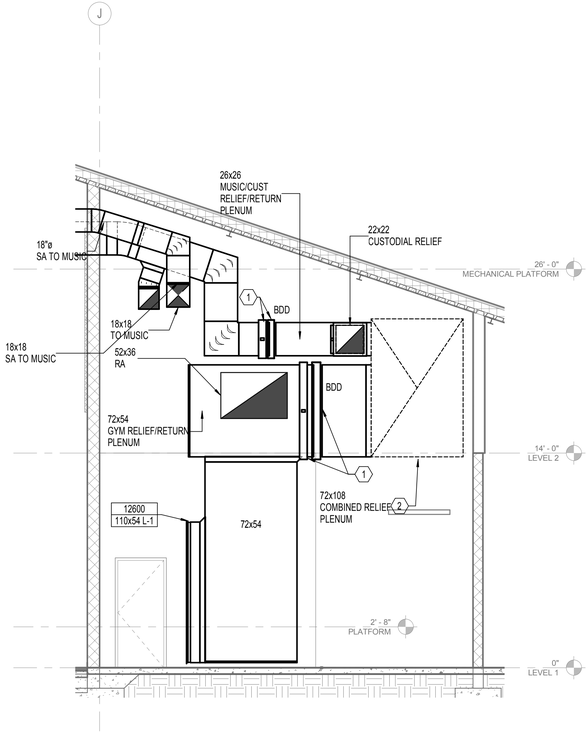

1 SECTOR C N-S SECTION GYM, MUSIC & CUSTODIAL RETURN / RELIEF
1/4" = 1'-0"

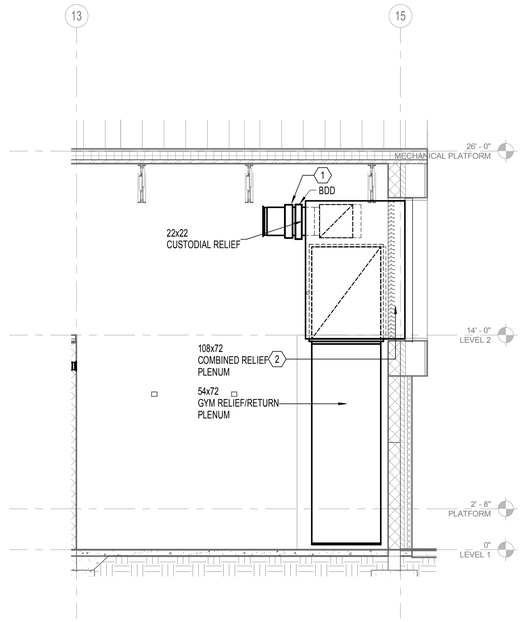

2 SECTOR C E-W SECTION 1 GYM, MUSIC & CUSTODIAL RETURN / RELIEF
1/4" = 1'-0"

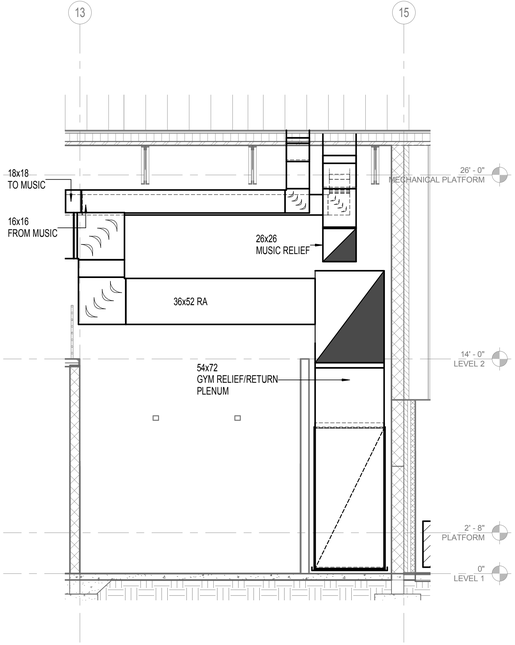

3 SECTOR C E-W SECTION 2 GYM, MUSIC & CUSTODIAL RETURN / RELIEF
1/4" = 1'-0"

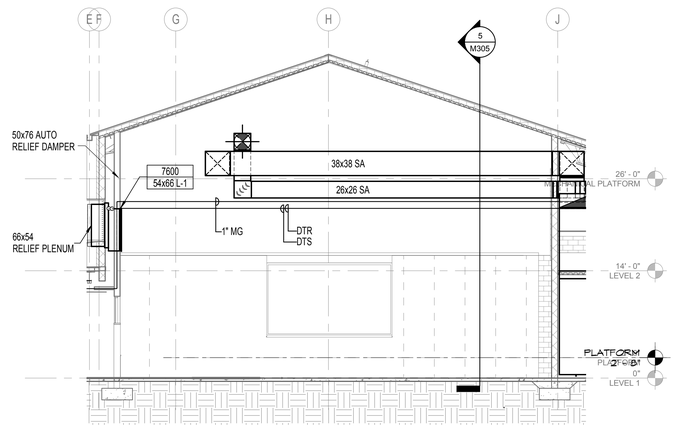

4 SECTOR C GYM LOOKING EAST
1/8" = 1'-0"

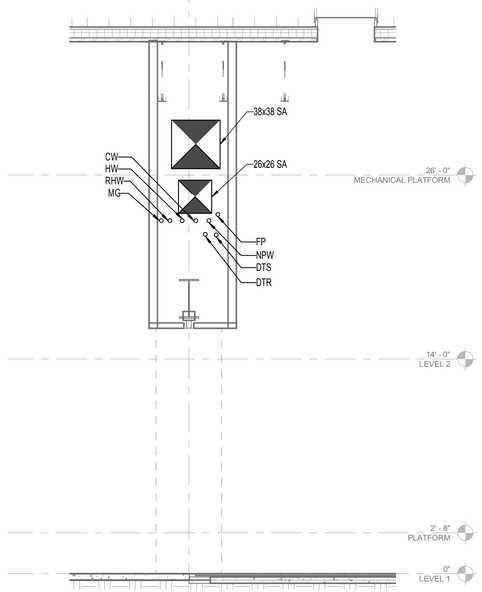

5 SECTOR C GYM/CAFETERIA LOOKING NORTH
1/4" = 1'-0"

PIVOT ARCHITECTURE

REGISTERED PROFESSIONAL ENGINEER
18329PE
OREGON
JULY 15, 1986
NICHOLAS P. COLLINS
2-12-2016
EXPIRES 12-31-17

IBI GROUP

Nova

PAE
Portland | San Francisco | Seattle
pae-engineers.com

BID SET

4J
EUGENE SCHOOL DISTRICT 4J
120 WEST HILLEARD AVENUE, EUGENE, OREGON 97404

RIVER ROAD / EL CAMINO DEL RIO ELEMENTARY SCHOOL

SECTIONS - MECHANICAL

PROJECT #	1337.00
ISSUE DATE	2.12.2016
DRAWN	SC
CHECKED	PIC

REVISIONS

M305

PRINTED ON: 2/11/2016 4:13:26 PM FROM FILE: C:\Revit Local Files\13-1533 MEP15\13-1533 MEP15_karol.kluczynski.rvt

© 2014 PIVOT ARCHITECTURE

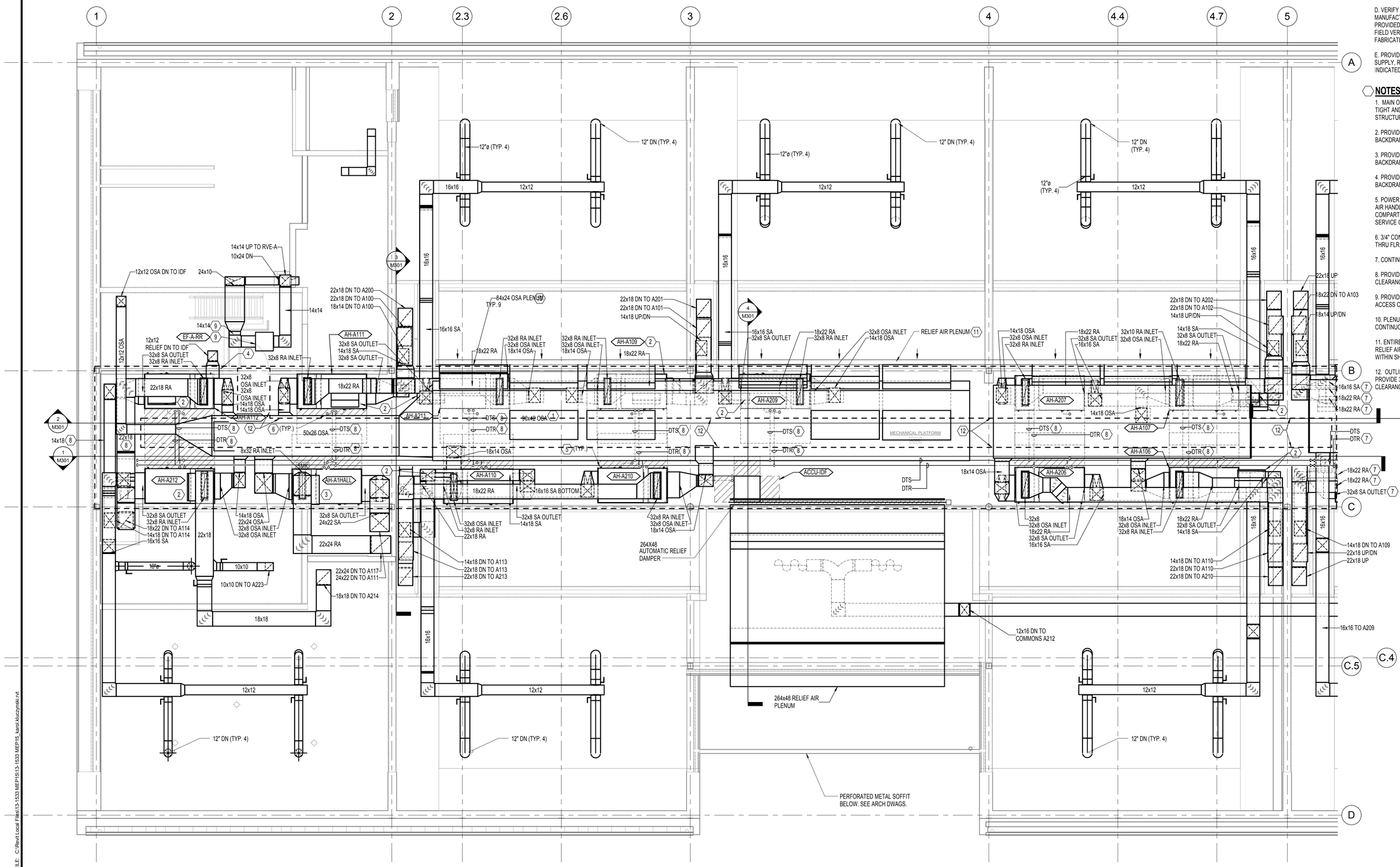

1 SECTOR A MECHANICAL PLATFORM WEST
1/4" = 1'-0"

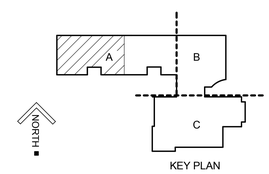

KEY PLAN

GENERAL NOTES:

A. ARRANGE EQUIPMENT, PIPING, CONDUIT AND DUCTWORK TO MAINTAIN A 3 FT. WIDE MAINTENANCE PATHWAY THRU MECH. PLATFORM WITH MIN. 6'8" CLEAR VERTICAL HT.

B. COORDINATE WORK WITH ALL TRADES INVOLVED. PROVIDE OFFSETS IN PIPING AND DUCTS AS REQUIRED TO AVOID OBSTRUCTIONS AT NO ADDITIONAL COST TO OWNER.

C. ALL DETAILS APPLY TO THIS SHEET WHETHER TAGGED OR NOT.

D. VERIFY EQUIPMENT CONNECTIONS WITH MANUFACTURER'S CERTIFIED DRAWINGS. PROVIDED DUCT TRANSITIONS TO EQUIPMENT. FIELD VERIFY DIMENSIONS PRIOR TO FABRICATION.

E. PROVIDE VOLUME DAMPER AT EACH BRANCH SUPPLY, RETURN, OR EXHAUST DUCT WHETHER INDICATED OR NOT.

NOTES:

1. MAIN OSA DUCT TO BE HUNG FROM ABOVE, TIGHT AND PARALLEL TO ANGLE OF ROOF STRUCTURE ABOVE.
2. PROVIDE 34x16 AUTOMATIC DAMPER AND BACKDRAFT DAMPER.
3. PROVIDE 36x20 AUTOMATIC DAMPER AND BACKDRAFT DAMPER.
4. PROVIDE 18x16 AUTOMATIC DAMPER AND BACKDRAFT DAMPER.
5. POWER AND CONTROL PANEL, INTEGRAL TO AIR HANDLER, ADJACENT TO BLOWER COMPARTMENT. MAINTAIN MIN 36 INCH SERVICE CLEARANCE.
6. 3/4" CONDENSATE TRAP AND DRAIN DN THRU FLR.
7. CONTINUED ON M412.
8. PROVIDE 6' 8" AFF MAINTENANCE ACCESS CLEARANCE.
9. PROVIDED MINIMUM 7' 2" AFF MAINTAINABLE ACCESS CLEARANCE.
10. PLENUM CONNECTS TO A SINGLE CONTINUOUS OSA LOUVER.
11. ENTIRE MECH. PLATFORM FUNCTIONS AS A RELIEF AIR PLENUM. MATERIALS CONTAINED WITHIN SHALL BE NON-COMBUSTIBLE.
12. OUTLINE OF MAINTENANCE PATH. PROVIDE 3' x 6' 8" AFF MAINTENANCE ACCESS CLEARANCE ALONG THIS ROUTE.

PIVOT ARCHITECTURE

REGISTERED PROFESSIONAL ENGINEER 18329PE OREGON JULY 19, 1990 NICHOLAS P. COLLIGAN EXPIRES 12-31-17 2-12-2016

IBI GROUP

PAE Portland | San Francisco | Seattle pae-engineers.com

BID SET

EUGENE SCHOOL DISTRICT 4J
120 WEST HILLEARD AVENUE, EUGENE, OREGON 97404

RIVER ROAD / EL CAMINO DEL RIO ELEMENTARY SCHOOL

SECTOR A PARTIAL MECHANICAL PLAN - EQUIPMENT PLATFORM WEST

PROJECT #	13373.00
ISSUE DATE:	2.12.2016
DRAWN:	SC
CHECKED:	PIC

REVISIONS:

M411

PRINTED ON: 2/11/2016 4:13:34 PM FROM FILE: C:\Revit Local Files\13-1533 MEP15\13-1533 MEP15_karol.kliczynski.rvt

© 2014 PIVOT ARCHITECTURE

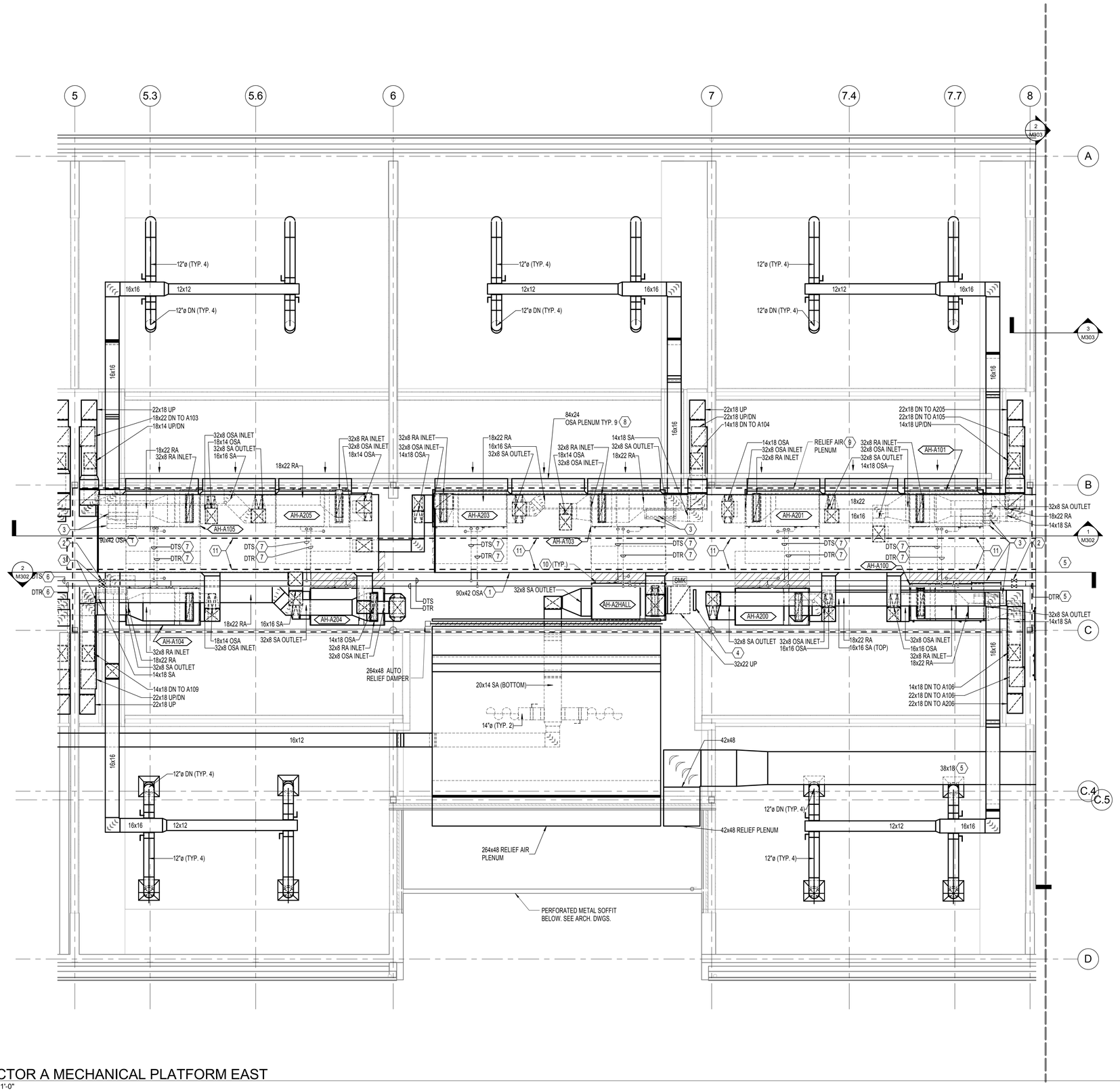

1 SECTOR A MECHANICAL PLATFORM EAST
1/4" = 1'-0"

NORTH

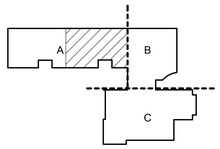

KEY PLAN

GENERAL NOTES:

A. ARRANGE EQUIPMENT, PIPING, CONDUIT AND DUCTWORK TO MAINTAIN A 3 FT. WIDE MAINTENANCE PATHWAY THRU MECH. PLATFORM WITH MIN. 6'8" CLEAR VERTICAL HT.

B. COORDINATE WORK WITH ALL TRADES INVOLVED. PROVIDE OFFSETS IN PIPING AND DUCTS AS REQUIRED TO AVOID OBSTRUCTIONS AT NO ADDITIONAL COST TO OWNER.

C. ALL DETAILS APPLY TO THIS SHEET WHETHER TAGGED OR NOT.

D. VERIFY EQUIPMENT CONNECTIONS WITH MANUFACTURER'S CERTIFIED DRAWINGS. PROVIDED DUCT TRANSITIONS TO EQUIPMENT. FIELD VERIFY DIMENSIONS PRIOR TO FABRICATION.

E. PROVIDE VOLUME DAMPER AT EACH BRANCH SUPPLY, RETURN, OR EXHAUST DUCT WHETHER INDICATED OR NOT.

NOTES:

1. MAIN OSA DUCT TO BE HUNG FROM ABOVE, TIGHT AND PARALLEL TO ANGLE OF ROOF STRUCTURE ABOVE.

2. 4" ISOLATION VALVES W/ 4" SERVICE BYPASS AND VALVE.

3. 34X16 AUTOMATIC DAMPER AND BDD.

4. 34X24 AUTOMATIC DAMPER AND BDD.

5. CONTINUED ON 1/M413

6. CONTINUED ON M411.

7. PROVIDE MINIMUM 6' 8" AFF MAINTANANCE ACCESS CLEARANCE.

8. PLENUM CONNECTS TO A SINGLE CONTINUOUS OSA LOUVER.

9. ENTIRE MECH PLATFORM FUNCTIONS AS A RELEIF AIR PLENUM. MATERIALS CONTAINED WITHIN SHALL BE NON-CONBUSTIBLE.

10. POWER AND CONTROL PANEL, INTEGRAL TO AIR HANDLER, ADJECENT TO BLOWER COMPARTMENT. MAINTAIN MIN 36 IN. SERVICE CLEARANCE.

11. OUTLINE OF MAINTENANCE PATH. PROVIDE 3' x 6' 8" AFF MAINTENANCE ACCESS CLEARANCE ALONG THIS ROUTE.

PIVOT ARCHITECTURE

REGISTERED PROFESSIONAL ENGINEER 18329PE OREGON NOV 15 1988 DOUGLAS P. COLLINS
EXPIRES 12-31-17
2-12-2016

IBI GROUP

lowa

PAE
Portland | San Francisco | Seattle
pae-engineers.com

BID SET

4J EUGENE SCHOOL DISTRICT 4J
120 WEST HILLYARD AVENUE, EUGENE, OREGON 97404

RIVER ROAD / EL CAMINO DEL RIO ELEMENTARY SCHOOL

SECTOR A PARTIAL MECHANICAL PLAN - EQUIPMENT PLATFORM EAST

PROJECT #	1337.00
ISSUE DATE:	2.12.2016
DRAWN:	SC
CHECKED:	PKC

REVISIONS

M412

PRINTED ON: 2/11/2016 4:13:41 PM FROM FILE: C:\Revit Local Files\13-1533 MEP15\13-1533 MEP15_karol kluczynski.rvt

© 2014 PIVOT ARCHITECTURE

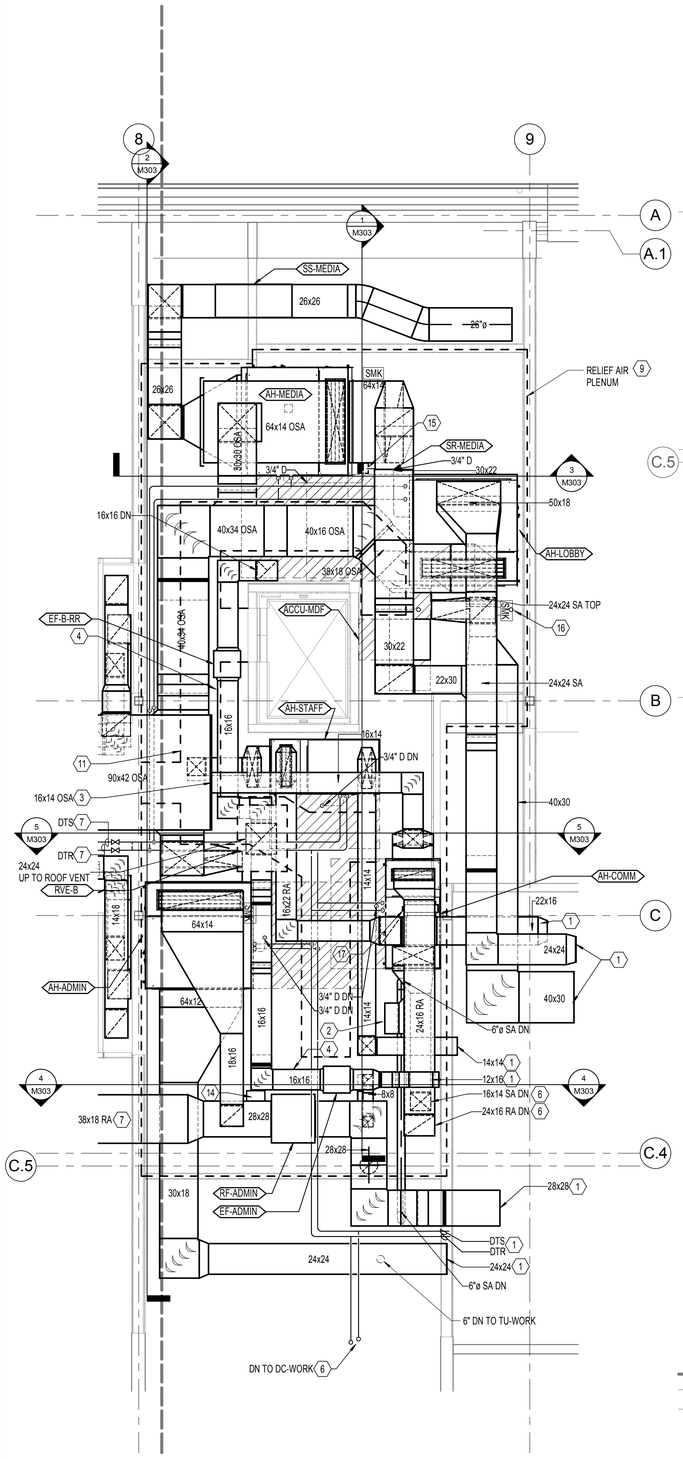

1 SECTOR B MECHANICAL PLATFORM
1/4" = 1'-0"

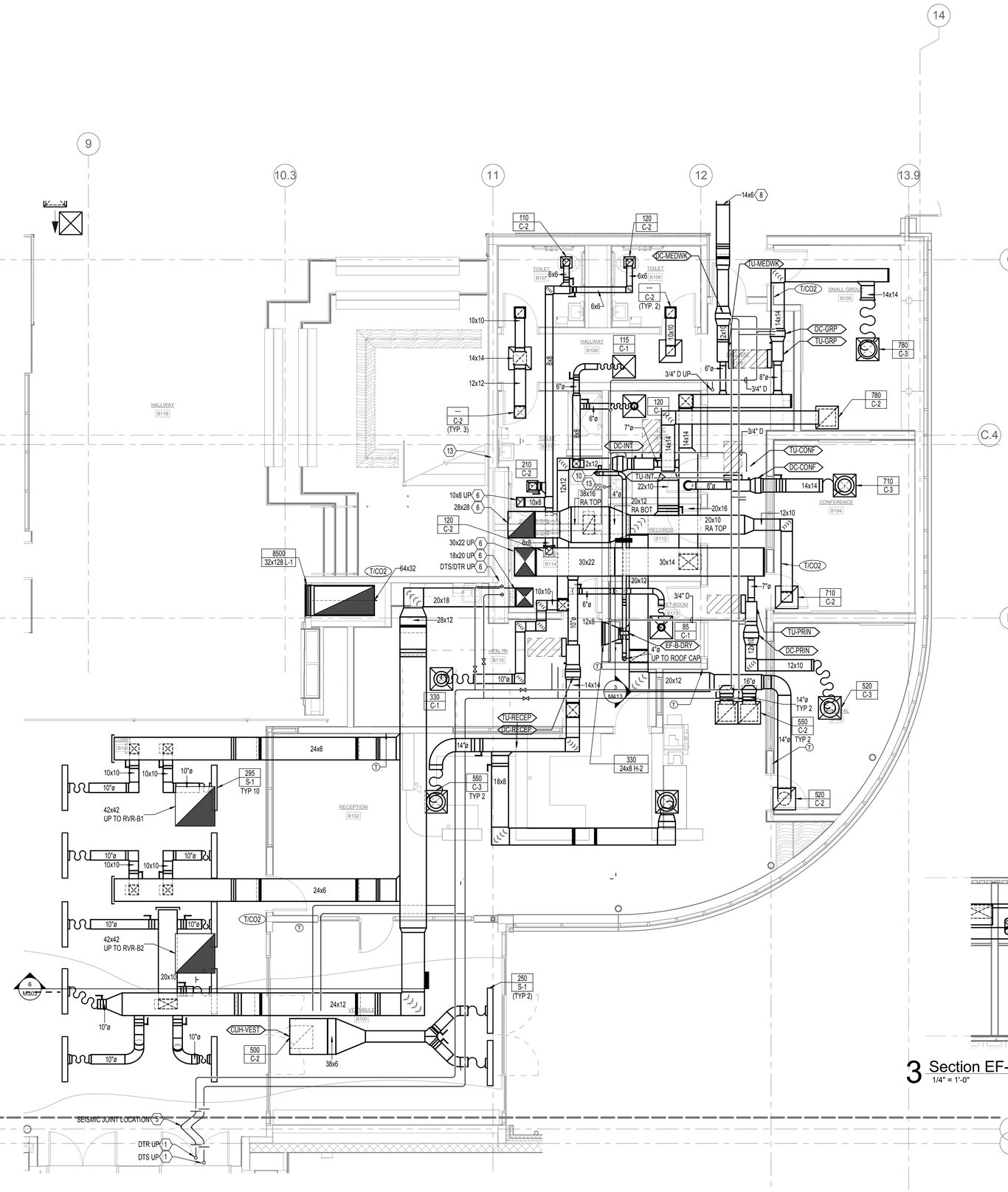

2 ENLARGED PLAN - SECTOR B ADMIN
1/4" = 1'-0"

GENERAL NOTES:

A. ARRANGE EQUIPMENT, PIPING, CONDUIT AND DUCTWORK TO MAINTAIN A 3 FT. WIDE MAINTENANCE PATHWAY THRU MECH. PLATFORM WITH MIN. 6'8" CLEAR VERTICAL HT.

B. COORDINATE WORK WITH ALL TRADES INVOLVED. PROVIDE OFFSETS IN PIPINS AND DUCTS AS REQUIRED TO AVOID OBSTRUCTIONS AT NO ADDITIONAL COST TO OWNER.

C. ALL DETAILS APPLY TO THIS SHEET WHETHER TAGGED OR NOT.

D. VERIFY EQUIPMENT CONNECTIONS WITH MANUFACTURER'S CERTIFIED DRAWINGS. PROVIDED DUCT TRANSITIONS TO EQUIPMENT. FIELD VERIFY DIMENSIONS PRIOR TO FABRICATION.

E. PROVIDE VOLUME DAMPER AT EACH BRANCH SUPPLY, RETURN, OR EXHAUST DUCT WHETHER INDICATED OR NOT.

F. REFER TO ARCH REFLECTED CEILING PLANS FOR EXACT LOCATION OF CEILING-MOUNTED DEVICES.

NOTES:

1. CONTINUED ON M123.

2. PROVIDE AUTOMATIC DAMPER AND BACKDRAFT DAMPER.

3. CONNECT TO END OF OSA PLENUM.

4. PROVIDE BACKDRAFT DAMPER.

5. PROVIDE SEISMIC V-LOOPS, SIZED SO THAT ONE PIPE NESTS WITHIN THE OTHER. COORDINATE WITH LAYOUT OF SIMILAR PLUMBING SEISMIC LOOPS IN THE SAME LOCATION.

6. CONTINUED ON M123.

7. CONTINUED ON M412.

8. CONTINUED ON M113.

9. ENTIRE MECH. PLATFORM FUNCTIONS AS A RELIEF AIR PLENUM. MATERIALS CONTAINED WITHIN SHALL BE NON-COMBUSTIBLE.

10. EF-C-DRY ANNUNCIATOR PANEL.

11. OUTLINE OF MAINTENANCE PATH. PROVIDE 3' x 6' 8" AFF MAINTENANCE ACCESS CLEARANCE ALONG THIS ROUTE.

13. CONDENSATE DRAIN DN IN WALL, TERMINATE AT FLOOR SINK W/AIR GAP.

14. VFD FOR RF-ADMIN. MOUNT NEAR FAN W/ STRUT SUPPORTS.

15. TERMINATE CONDENSATE DRAINS AT FLOOR SINK.

16. PUMPED CONDENSATE FROM MDF ROOM UP, DN. TERMINATE AT FLOOR SINK ON PLATFORM.

17. PROVIDE AUTOMATIC DAMPER AND BACKDRAFT DAMPER, SIZE 34X16.

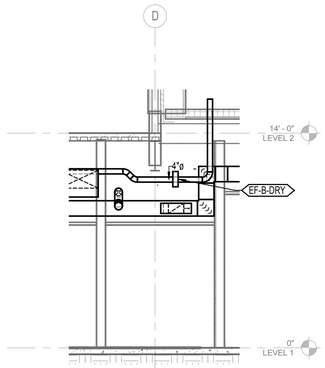

3 Section EF-B-DRYER SECTION DETAIL
1/4" = 1'-0"

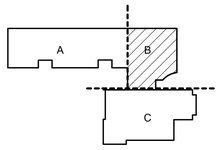

KEY PLAN

PIVOT ARCHITECTURE

REGISTERED PROFESSIONAL ENGINEER 18329PE DOUGLAS P. COLLIER OREGON EXPIRES 12-31-17

IBI GROUP

PAE Portland | San Francisco | Seattle pae-engineers.com

BID SET

EUGENE SCHOOL DISTRICT 4J
120 WEST HILLEARD AVENUE, EUGENE, OREGON 97404

RIVER ROAD / EL CAMINO DEL RIO ELEMENTARY SCHOOL

SECTOR B PARTIAL MECHANICAL PLAN - EQUIPMENT PLATFORM

PROJECT #	1537.00
ISSUE DATE:	2.12.2016
DRAWN:	SC
CHECKED:	PIC

REVISIONS:

M413

PRINTED ON: 2/11/2016 4:13:51 PM FROM FILE: C:\Revit Local Files\13-1533 MEP15_karol.kluczynski.rvt

© 2014 PIVOT ARCHITECTURE

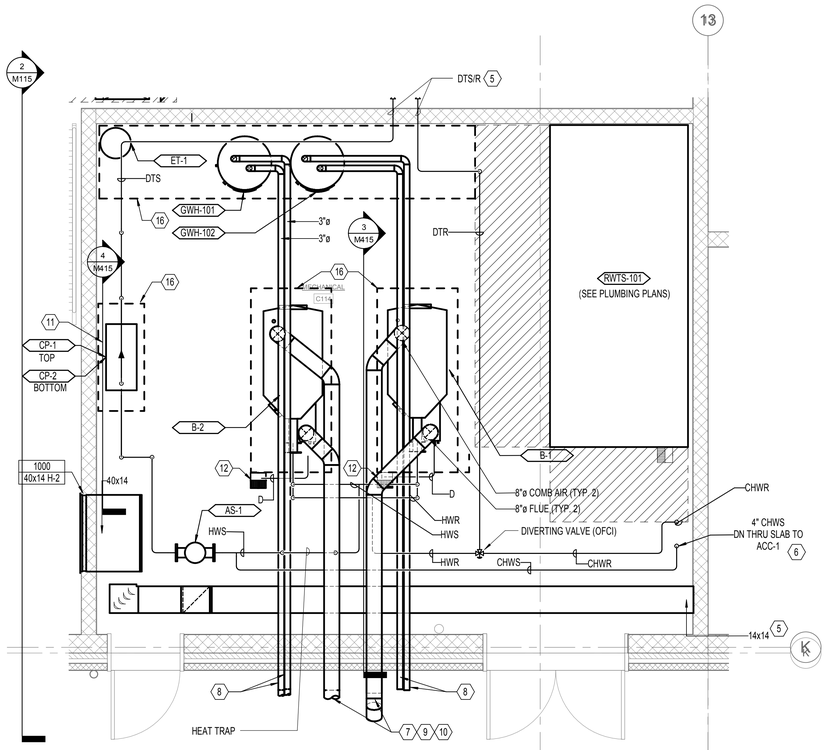

2 ENLARGED PLAN - SECTOR C BOILER ROOM
3/8" = 1'-0"

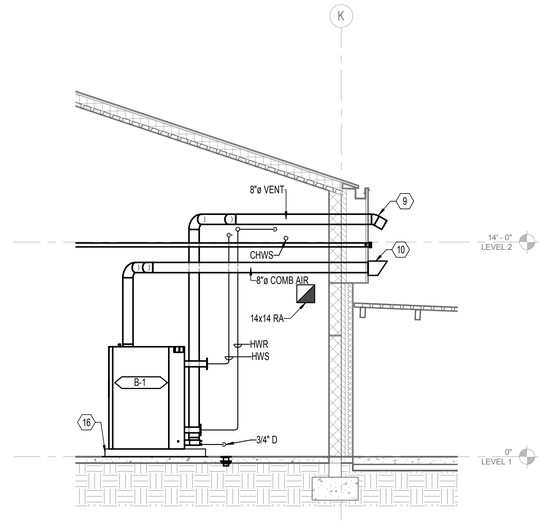

3 BOILER ROOM B-1 FACING EAST
1/4" = 1'-0"

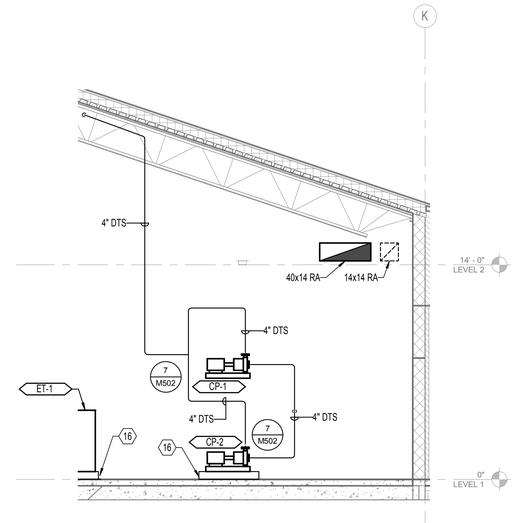

4 BOILER ROOM PUMPS FACING WEST
1/4" = 1'-0"

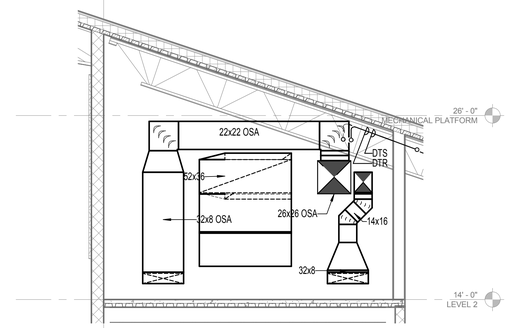

5 SECTOR C PLATFORM EAST SECTION LOOKING EAST
1/4" = 1'-0"

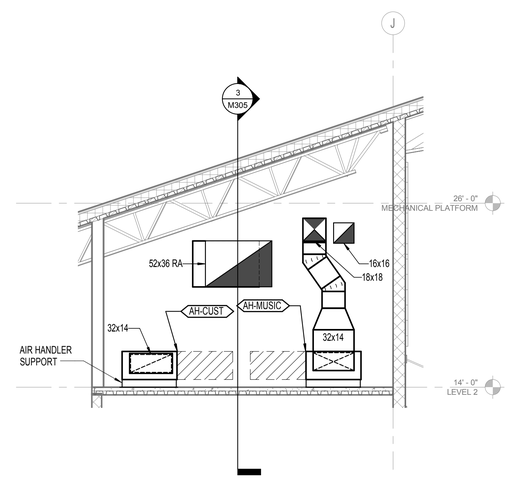

6 SECTOR C PLATFORM EAST SECTION LOOKING WEST
1/4" = 1'-0"

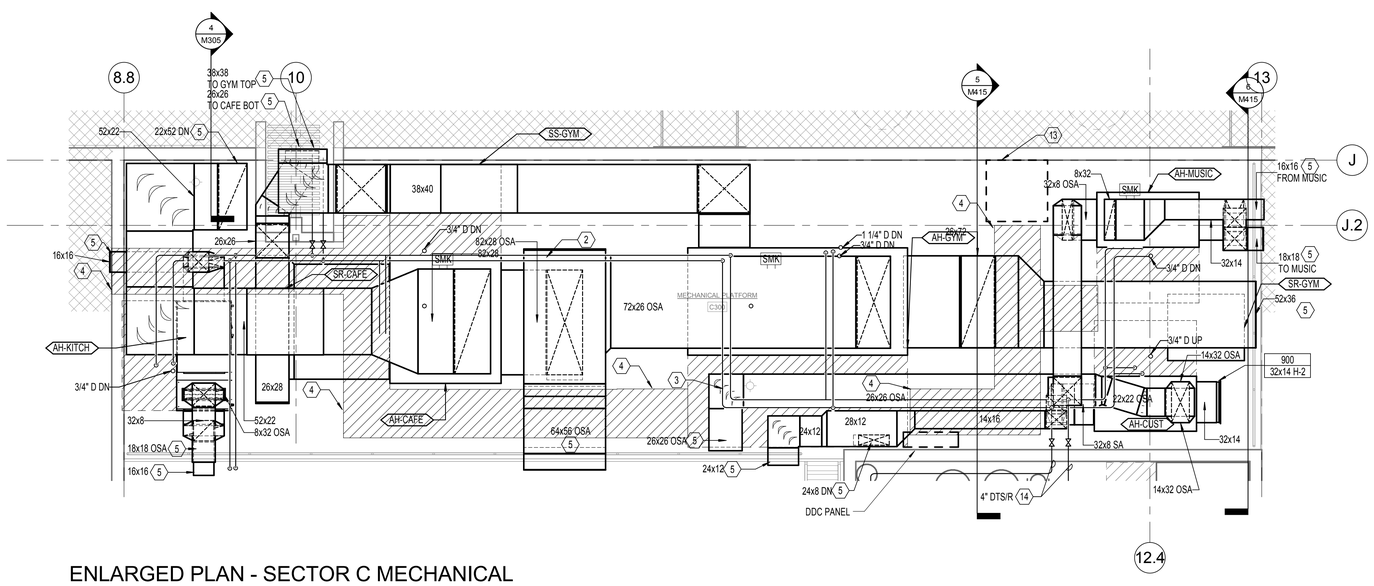

1 ENLARGED PLAN - SECTOR C MECHANICAL PLATFORM
1/4" = 1'-0"

GENERAL NOTES:

A. CONTRACTOR RESPONSIBLE FOR COORDINATING W/ OTHER TRADES. INCLUDE NECESSARY OFFSETS AND ROUTE CHANGES REQUIRED FOR COORDINATION.

NOTES:

1. TERMINATE AT EXTERIOR WALL, ABOVE CANOPY.
2. ROUTE ABOVE, THROUGH TRUSS OPENINGS.
3. ROUTE ABOVE, BETWEEN TRUSSES.
4. PROVIDE MINIMUM OF 3' x 6' 8" AFF MAINTENANCE CLEARANCE.
5. CONTINUED ON M115.
6. CONTINUED ON M105.
7. BOILER VENT (ABOVE) AND COMBUSTION AIR (BELOW) (TYP. 2).
8. WATER HEATER SIDEWALL TERMINATION KIT WITH SIDE BY SIDE VENTS AND COMBUSTION AIR CONNECTIONS. MAINTAIN MIN. 12" DISTANCE FROM BOILER VENT TERMINATION. MOUNT AT 14' AFF.
9. BOILER VENT TERMINATION TO HAVE A 30 DEGREE ELBOW DOWN WITH BIRD SCREEN. PROVIDE MIN 12" HORIZONTAL SEPARATION BETWEEN ADJACENT VENTS. MAINTAIN MAX. POSSIBLE HORIZONTAL DISTANCE FROM DOORS. SLOPE BACK TO BOILER AT MIN 1/4" PER FOOT.
10. BOILER COMBUSTION AIR OPENING WITH WEATHER HOOD AND SCREEN. INSTALL 36" DIRECTLY BENEATH CORRESPONDING BOILER VENT TERMINATION.
11. PROVIDE STEEL SUPPORT RACK FOR UPPER PUMP.
12. TERMINATE CONDENSATE DRAIN AT FLOOR SINK. SEE PLUMBING PLANS.
13. TECH PANEL AND CONDUIT AT THIS LOCATION, COORDINATE W/ TECHNOLOGY CONTRACTOR TO PROVIDE CLEARANCE.
14. CONTINUED ON 1/M415.
15. CONTINUED ON 2/M415.
16. SEE ARCH DWGS FOR CONCRETE HOUSEKEEPING PAD. COORDINATE DIMENSIONS W/ FINAL EQUIPMENT REQUIREMENTS.

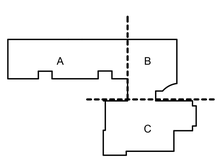

KEY PLAN

PIVOT ARCHITECTURE

REGISTERED PROFESSIONAL ENGINEER 18329PE DOUGLAS P. COLLIER OREGON EXPIRES 12-31-17

IBI GROUP

PAE Portland | San Francisco | Seattle pae-engineers.com

BID SET

EUGENE SCHOOL DISTRICT 4J
120 WEST HILLYARD AVENUE, EUGENE, OREGON 97404

RIVER ROAD / EL CAMINO DEL RIO ELEMENTARY SCHOOL

SECTOR C PARTIAL MECHANICAL PLAN

PROJECT #	1337.00
ISSUE DATE:	2.12.2016
DRAWN:	SC
CHECKED:	PIC

REVISIONS

M415

PRINTED ON: 2/11/2016 4:13:59 PM FROM FILE: C:\Revit Local Files\13-1533 MEP15\13-1533 MEP15_karol.kluczynski.rvt

© 2014 PIVOT ARCHITECTURE

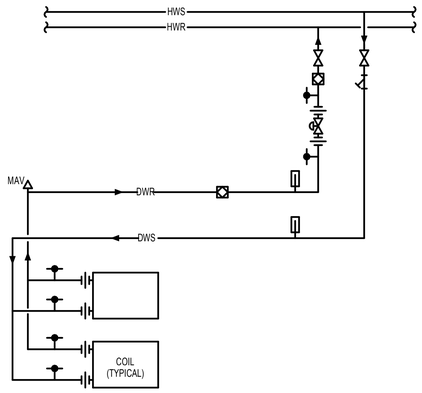

GENERAL NOTE:

1. TYPICAL FOR GYM, CAFE, AND MEDIA CENTER ONLY. SEE M502 FOR OTHER LOCATIONS.

2. OFFSET PIPING AT COIL ENDS TO ALLOW REMOVAL OF COILS.

1 AHU HEATING COIL PIPING
NONE

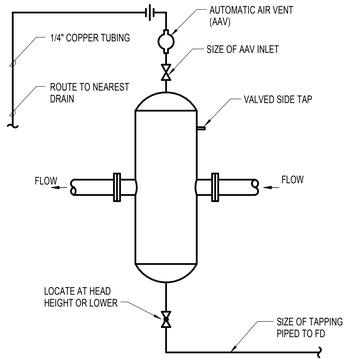

4 AIR/DIRT SEPARATOR - HIGH EFFICIENCY COALESCING
NONE

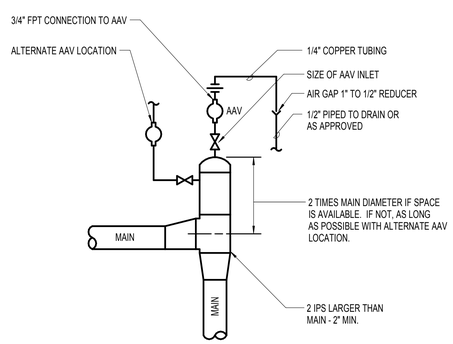

8 AUTOMATIC AIR VENT
NONE

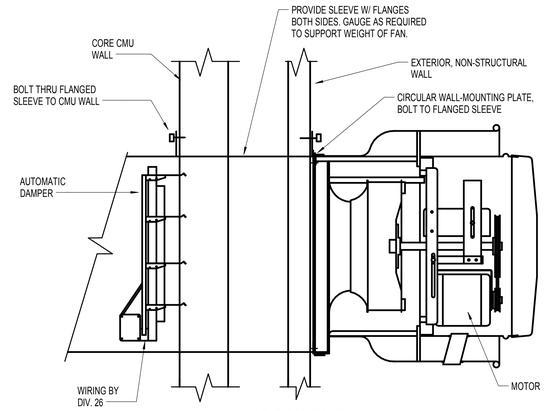

GENERAL NOTE:

1. SEE SPECIFICATIONS FOR VIBRATION ISOLATION AND SEISMIC RESTRAINT.

2. DUCT TO EXHAUST FAN CONNECTION TO BE FLANGE, GASKETED AND BOLTED TO FAN INLET PER OMSC 506.3.2.3

3. SIZE AND NUMBER OF BOLTS, GAUGE OF SLEEVE AS REQUIRED BY SPEC SECTIN 230548.

11 DISHWASH EXHAUST FAN
NONE

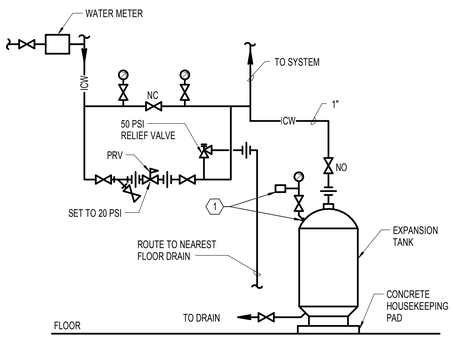

NOTE: (1) PRE-PRESSURIZE TO 20 PSI BEFORE OPENING TO SYSTEM. CONNECT TO AIR VALVE FURNISHED W/ TANK. PROVIDE EXTERNAL AIR VALVE AND CAP.

GENERAL NOTE:

1. SEE SPECIFICATIONS FOR SEISMIC RESTRAINT REQUIREMENTS.

2 EXPANSION TANK CONNECTION
NONE

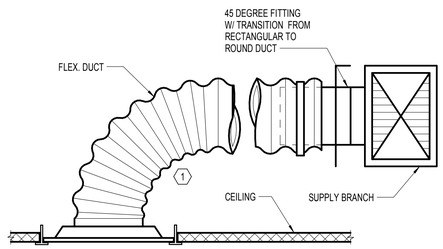

NOTES:

(1) 2 DIA. MINIMUM FLEX DUCT RADIUS (4 DIA. MAX LENGTH). WHERE 2 DIA. TURN CAN NOT BE MET USE DETAIL 6/M501

5 TYPICAL ROUND NECK T-BAR DIFFUSER
NONE

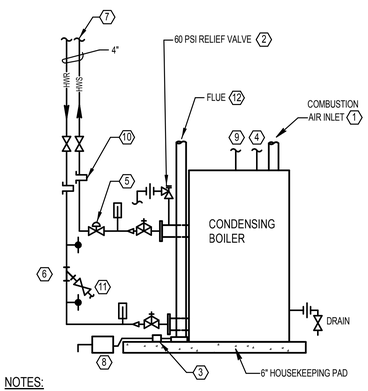

NOTES:

(1) GALV STEEL COMBUSTION AIR DUCT TO EXTERIOR. SEE M415 FOR ROUTING AND METHOD OF TERMINATION.
(2) ROUTE RELIEF PIPING TO WITHIN 6 INCHES OF FLOOR.
(3) CONNECT TRAP TO BOILER WITH TUBING FURNISHED WITH BOILER. SLOPE TOWARD FLOOR.
(4) SEE PLUMBING PLANS AND DIAGRAMS FOR GAS PIPING.
(5) MOTORIZED AUTOMATIC ISOLATION VALVE, FURNISHED WITH BOILER.
(6) PROVIDE STAINLESS STEEL 30 MESH SCREEN.
(7) PIPE ALL BOILERS IN IDENTICAL LAYOUT TO PROVIDE EQUAL PRESSURE DROPS.
(8) PH NEUTRALIZER - ROUTE OUTLET TO FLOOR SINK
(9) PROPANE PIPING SAME AS NAT GAS, BOILER B-1 ONLY. SEE PLUMBING PLANS.
(10) THERMOWELL FOR TEMPERATURE SENSOR.
(11) MIN. 1 INCH BLOWDOWN VALVE AND LINE TO FLOOR SINK.
(12) DOUBLE-WALL SS BOILER FLUE TO BLDG EXTERIOR. SEE M415 FOR ROUTING AND TERMINATION.

9 BOILER PIPING
NONE

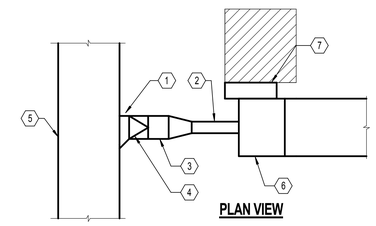

PLAN VIEW

NOTES:

(1) RECTANGULAR SHOE TAP FITTING

(2) INLET DUCT. MINIMUM STRAIGHT LENGTH = 3'-0", DUCT SIZE TO BE SAME SIZE AS TERMINAL UNIT INLET. FLEXIBLE DUCT CONNECTIONS ARE NOT ALLOWED.

(3) BRANCH DUCT. IF UNDER 5'-0" IN LENGTH, DUCT SIZE TO BE SAME SIZE AS TERMINAL UNIT INLET. IF LENGTH IS 5'-0" OR OVER, DUCT SIZE TO BE AS SHOWN ON PLAN.

(4) ROUND TO RECTANGULAR TRANSITION.

(5) RECTANGULAR LOW-PRESSURE SUPPLY DUCT.

(6) TERMINAL UNIT

(7) CONTROL ENCLOSURE. PROVIDE 36" CLEARANCE DIRECTLY IN FRONT OF ENCLOSURE. MOUNT CONTROLS AND PIPING CONNECTIONS ON SAME SIDE OF UNIT.

12 TYPICAL TERMINAL UNIT
NONE

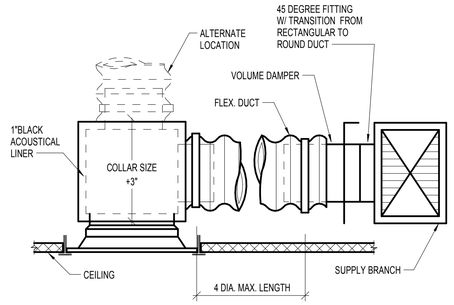

6 TYPICAL SQUARE NECK T-BAR DIFFUSER
NONE

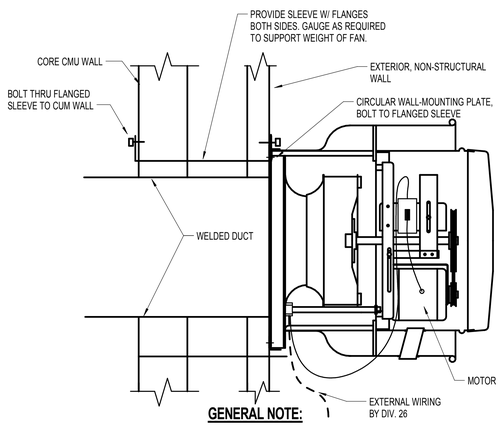

GENERAL NOTE:

1. SEE SPECIFICATIONS FOR VIBRATION ISOLATION AND SEISMIC RESTRAINT.

2. DUCT TO EXHAUST FAN CONNECTION TO BE FLANGE, GASKETED ADN BOLTED TO FAN INLET PER OMSC 506.3.2.3

3 GREASE EXHAUST FAN
NONE

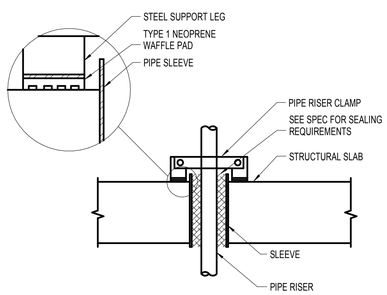

7 PIPE RISER SUPPORT
NONE

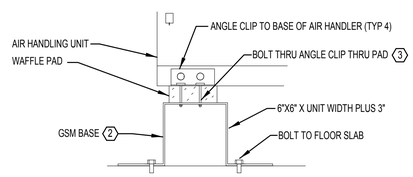

NOTES:

1. SELECT MOUNTING CLIPS,BASE AND BOLTS PER SPEC SECTION 23548.

2. PROVIDE AT FRONT AND REAR OF UNIT.

3. USE NEOPRENE WASHERS AT NUTS TO PREVENT TRANSMISSION OF VIBRATION.

10 AHU SUPPORT
NONE

PIVOT ARCHITECTURE

REGISTERED PROFESSIONAL ENGINEER 18329PE OREGON DOUGLAS P. COLLINS EXPIRES 12-31-17

IBI GROUP

Iowa

PAE Portland | San Francisco | Seattle pae-engineers.com

BID SET

4J EUGENE SCHOOL DISTRICT 4J
120 WEST HILLEARD AVENUE, EUGENE, OREGON 97404

RIVER ROAD / EL CAMINO DEL RIO ELEMENTARY SCHOOL

DETAILS - MECHANICAL

PROJECT #	1337.00
ISSUE DATE:	2.12.2016
DRAWN:	SC
CHECKED:	PIC
REVISIONS:	

M501

PRINTED ON: 2/11/2016 4:14:03 PM FROM FILE: C:\Revit Local Files\13-1533 MEP15\13-1533 MEP15_lanol.kliszczynski.rvt

© 2014 PIVOT ARCHITECTURE

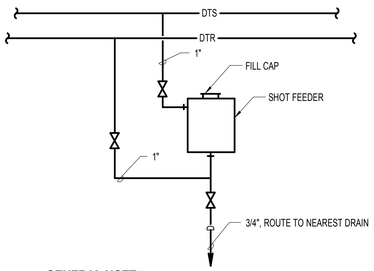

GENERAL NOTE:

1. INSULATE PIPING AND CHEMICAL FEEDER.

1 BY-PASS CHEMICAL FEEDER
NONE

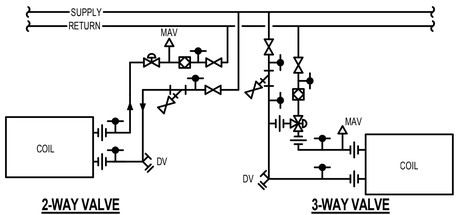

2-WAY VALVE
TYPICAL EXCEPT WHERE NOTED

3-WAY VALVE
SEE M601 FOR REQUIRED LOCATIONS

GENERAL NOTE:

1. TYPICAL OF DUCT COILS, SMALL AIR HANDLERS.

2. STRAINER BLOW OFF MAY SERVE AS DRAIN IF INSTALLED AT LOW POINT.

2 HEATING/COOLING COIL PIPING DETAIL
NONE

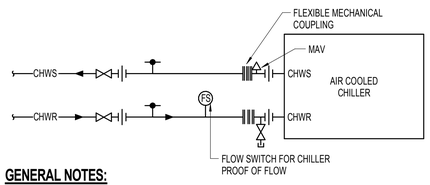

GENERAL NOTES:

1. INSTALL ALL PIPING TO ALLOW SERVICING AND REPAIR ACCESS. INCLUDE A UNION OR VICTAULIC TYPE COUPLING IN PIPING AT A LOCATION IN EACH PIPE THAT ALLOWS PIPES TO BE EASILY REMOVED FOR TUBE BUNDLE MAINTENANCE.

2. VIBRATION ISOLATION AND SEISMIC RESTRAINT PER SPECS.

3 CHILLER PIPING CONNECTIONS
NONE

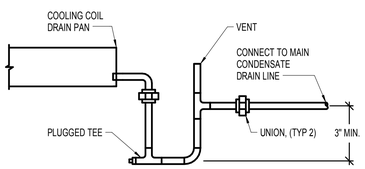

GENERAL NOTES:

1. DRAIN SIZE IS OUTLET SIZE UNLESS SHOWN LARGER.

2. LOCATE TRAP AND DRAIN PIPING AS REQUIRED TO MAINTAIN CLEARANCE IN FRONT OF AIR HANDLER ACCESS DOORS.

3. FILL TRAP W/ WATER PRIOR TO EQUIPMENT STARTUP.

4 COIL DRAIN PIPING
NONE

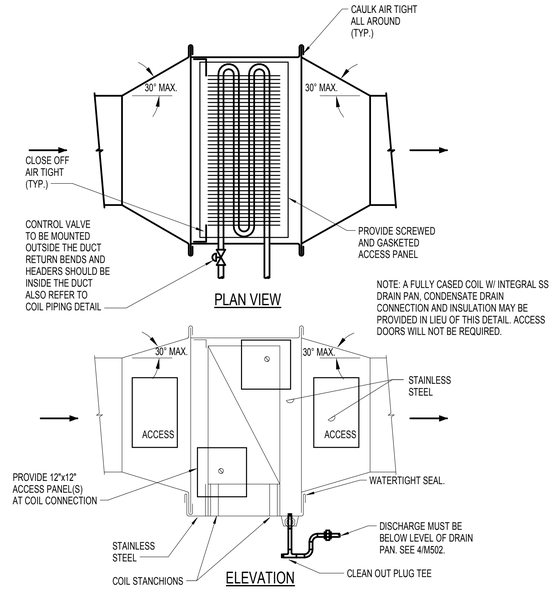

5 DUCT COOLING COIL INSTALLATION
NONE

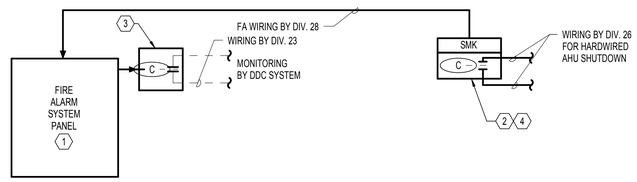

GENERAL NOTES:

1. REFER TO MECHANICAL FLOOR PLANS AND DETAILS FOR DUCT SMOKE DETECTOR QUANTITIES AND LOCATIONS. REFER TO ELECTRICAL DRAWINGS FOR ADDITIONAL DUCT SMOKE DETECTOR LOCATIONS. CONNECT DAMPERS TO 120V 20A BRANCH CIRCUITS AS INDICATED ON ELECTRICAL DRAWINGS.

2. CONTRACTOR SHALL COORDINATE DUCT SMOKE DETECTOR INSTALLATION AT EACH MAIN RETURN AIR DUCT LOCATION PRIOR TO COMMENCING WORK. DIV. 23 SHALL PROVIDE ALL DUCTWORK MODIFICATIONS REQUIRED TO ACCOMMODATE DUCT SMOKE DETECTOR INSTALLATION. PROVIDE ALL WORK TO SUIT INSTALLATION REQUIREMENTS AND ALL APPLICABLE CODES.

FAN SHUTDOWN SEQUENCE OF OPERATIONS:

UPON THE DETECTION OF SMOKE BY DUCT SMOKE DETECTOR:

DUCT DECTECTOR SHALL SHUT DOWN AIR HANDLER DIRECTLY.

NOTES:

1. REFER TO ELECTRICAL PLANS FOR FIRE ALARM PANEL LOCATION.
2. PROVIDE/MAINTAIN WORKING ACCESS TO ALL DUCT SMOKE DETECTORS.
3. REMOTE ADDRESSABLE FIRE ALARM RELAY PROVIDED BY DIV. 28 (FORM C CONTACT). MOUNT ADJACENT TO DDC PANEL IN BOILER ROOM..
4. AHU RETURN AIR DUCT SMOKE DETECTOR WITH SEPARATELY ADDRESSABLE RELAY BASE (FORM C CONTACT) FURNISHED BY DIV. 28. WIRED BY DIV. 28 TO FIRE ALARM SYSTEM. DETECTOR INSTALLED BY DIV. 23.

6 HVAC AND FIRE ALARM SYSTEM INTERFACE
NONE

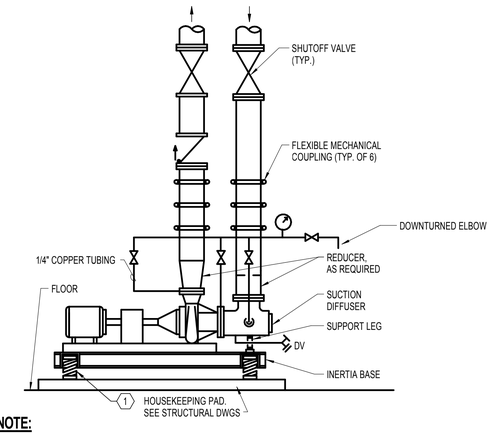

NOTE:

1. SEE SPECIFICATIONS FOR VIBRATION ISOLATION AND SEISMIC RESTRAINT.

7 BASE MOUNTED PUMP PIPING
NONE

PIVOT ARCHITECTURE

REGISTERED PROFESSIONAL ENGINEER 18329PE OREGON DOUGLAS P. COLLIER EXPIRES 12-31-17 2-12-2016

IBI GROUP

Iowa

PAE
Portland | San Francisco | Seattle
pae-engineers.com

BID SET
4J
EUGENE SCHOOL DISTRICT 4J
120 WEST HILLEARD AVENUE, EUGENE, OREGON 97404
RIVER ROAD / EL CAMINO DEL RIO ELEMENTARY SCHOOL

DETAILS - MECHANICAL

PROJECT #	1337.00	REVISIONS
ISSUE DATE:	2.12.2016	
DRAWN:	SC	
CHECKED:	PSC	

M502

PRINTED ON: 2/11/2016 4:14:05 PM FROM FILE: C:\Revit Local Files\13-1533 MEP15\13-1533 MEP15_karol.kluczynski.rvt

© 2014 PIVOT ARCHITECTURE

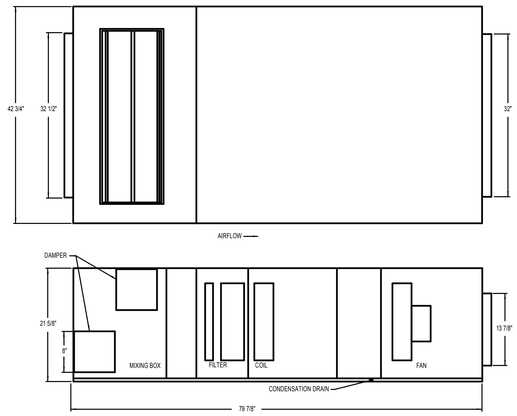

GENERAL NOTE:
A. DRAWING TO BE USED ONLY FOR DIMENSIONAL AND SUB-COMPONENT LOCATIONS.

B. REFERENCE M411, M412 AND M413 FOR AIR INLET AND OUTLET LOCATIONS.

1 GENERIC AHU DETAIL - AAON H3B
1" = 1'-0"

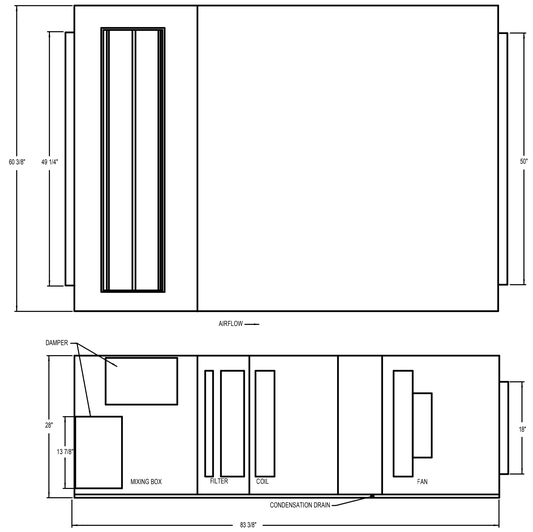

GENERAL NOTE:
A. DRAWING TO BE USED ONLY FOR DIMENSIONAL AND SUB-COMPONENT LOCATIONS.

B. REFERENCE M411, M412 AND M413 FOR AIR INLET AND OUTLET LOCATIONS.

2 GENERIC AHU DETAIL - AAON H3C
1" = 1'-0"

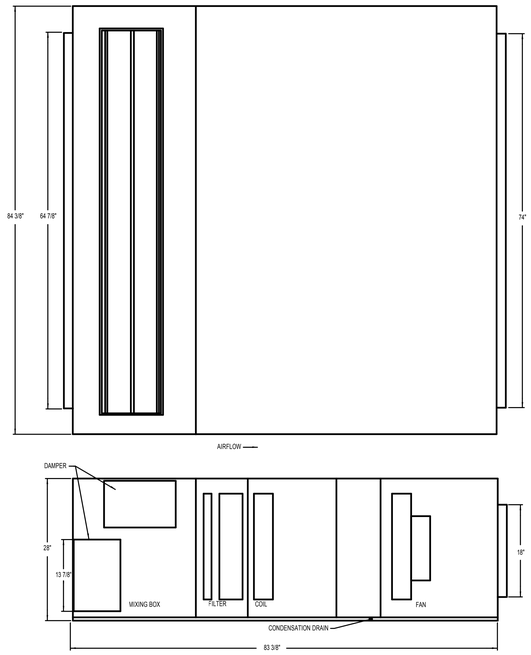

GENERAL NOTE:
A. DRAWING TO BE USED ONLY FOR DIMENSIONAL AND SUB-COMPONENT LOCATIONS.

B. REFERENCE M411, M412 AND M413 FOR AIR INLET AND OUTLET LOCATIONS.

3 GENERIC AHU DETAIL - AAON H3D
1" = 1'-0"

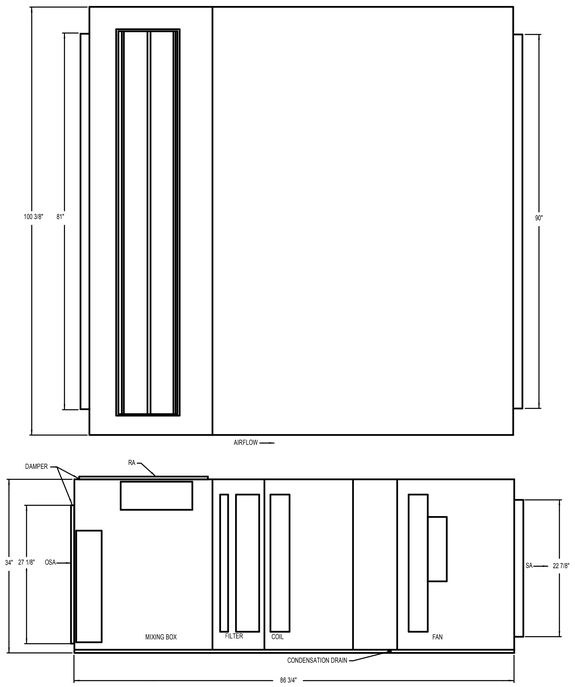

4 AHU-CAFE DETAIL - AAON H3E
1" = 1'-0"

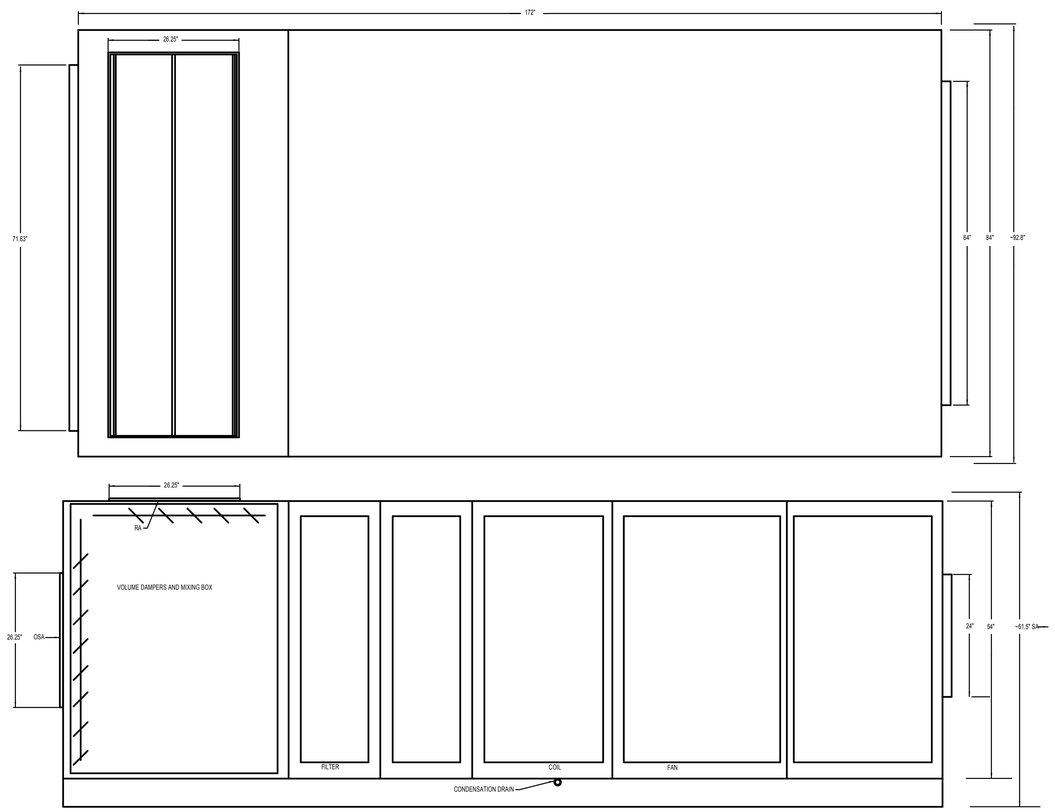

5 AHU-GYM DETAIL - AAON M2
1" = 1'-0"

PIVOT ARCHITECTURE

REGISTERED PROFESSIONAL ENGINEER
18329PE
OREGON
NOV 19, 1982
DOUGLAS P. COLLINS
EXPIRES 12-31-17
2-8-2016

IBI GROUP

Iowa

PAE
Portland | San Francisco | Seattle
pae-engineers.com

BID SET
4J
EUGENE SCHOOL DISTRICT 4-J
120 WEST HILLEARD AVENUE, EUGENE, OREGON 97404
RIVER ROAD / EL CAMINO DEL RIO ELEMENTARY SCHOOL

DETAILS - MECHANICAL

PROJECT #:	1337.00
ISSUE DATE:	2.12.2016
DRAWN:	SC
CHECKED:	PIC

REVISIONS:

M503

PRINTED ON: 2/11/2016 4:14:07 PM FROM FILE: C:\Revit Local Files\13-1533 MEP15\13-1533 MEP15_sarol.kluczynski.rvt

© 2014 PIVOT ARCHITECTURE

GENERAL NOTES:

A. FOR RUNOUT SIZES TO AIR HANDLER COILS, SEE AIR HANDLER SCHEDULE.

B. FOR RUNOUT SIZES TO DUCT-MOUNTED COILS, SEE DUCT COIL SCHEDULE.

C. SEE PLANS FOR ADDITIONAL ISOLATION VALVES.

NOTES:

1. PROVIDE STRAIGHT PIPE UPSTREAM AND DOWNSTREAM PER MANUFACTURER'S REQUIREMENTS

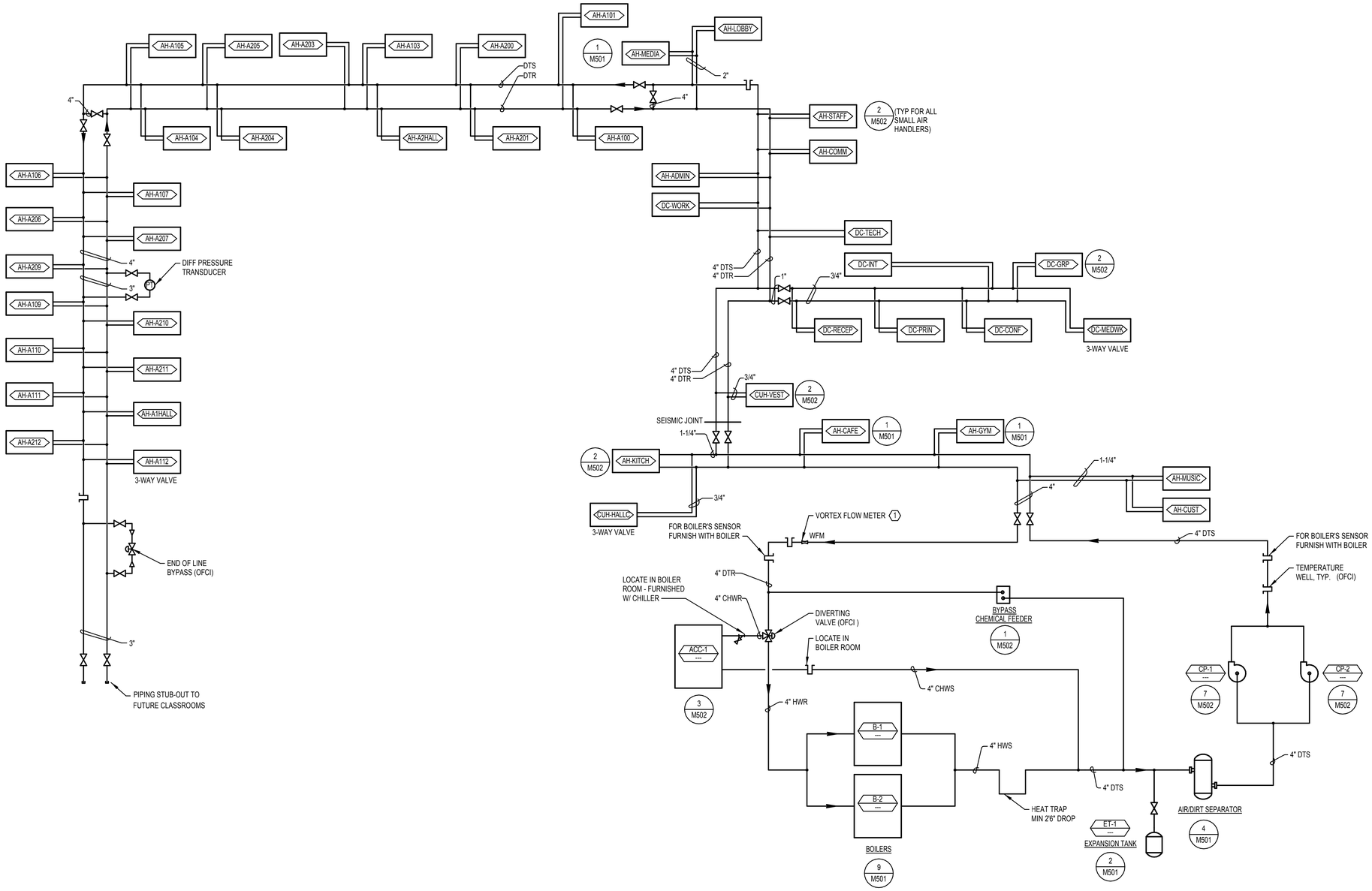

1 DUAL TEMPERATURE WATER SYSTEM DIAGRAM
NONE

PIVOT ARCHITECTURE

REGISTERED PROFESSIONAL ENGINEER 18329PE OREGON JANUARY 15, 1986 DOUGLAS P. COLLINS

EXPIRES 12-31-17

IBI GROUP

PAE
Portland | San Francisco | Seattle
pae-engineers.com

BID SET

EUGENE SCHOOL DISTRICT 4-J
120 WEST HILLEARD AVENUE, EUGENE, OREGON 97404

RIVER ROAD / EL CAMINO DEL RIO ELEMENTARY SCHOOL

FLOW DIAGRAMS - MECHANICAL

PROJECT #:	1537.00
ISSUE DATE:	2.12.2016
DRAWN:	SC
CHECKED:	PIC

REVISIONS:

M601

PRINTED ON: 2/11/2016 4:14:09 PM FROM FILE: C:\Revit Local Files\13-1533 MEP15_karol.kluczynski.rvt

© 2014 PIVOT ARCHITECTURE

STANDARD MECHANICAL ABBREVIATIONS

AF	AIRFOIL	IE	INVERT ELEVATION
AFF	ABOVE FINISHED FLOOR	IN	INCH(ES)
AHP	APPARATUS HOUSING PLENUM	INSUL	INSULATION
ALT	ALTERNATIVE	ISOL	ISOLAT(OR)(ION)
AL	ALUMINUM	KW	KILOWATT
APD	AIR PRESSURE DROP	KWH	KILOWATT HOUR
APPROX.	APPROXIMATELY	L	LENGTH
ARCH	ARCHITECT(URAL)	LAT	LEAVING AIR TEMP
AUTO	AUTOMATIC	LB	POUND
BDD	BACKDRAFT DAMPER	LDB	LEAVING DRY BULB
BI	BACKWARD INCLINED	LF	LINEAR FEET
BLDG	BUILDING	LFT	LEAVING FLUID TEMPERATURE
BSMT	BASEMENT	LVG	LEAVING
BTU	BRITISH THERMAL UNIT	LWB	LEAVING WET BULB
BTUH	BRITISH THERMAL UNITS PER HOUR	LWT	LEAVING WATER TEMPERATURE
CFH	CUBIC FEET PER HOUR	MAX	MAXIMUM
CFM	CUBIC FEET PER MINUTE	MBH	THOUSAND BTU PER HOUR
CFS	CUBIC FEET PER SECOND	MECH	MECHANICAL
CLG	CEILING OR COOLING	MFR	MANUFACTURER
CONC	CONCRETE	MIN	MINIMUM
CONN	CONNECT(ION)	MISC	MISCELLANEOUS
CONT	CONTINUE(ED)(UATION)	MTD	MOUNTED
CL	CENTERLINE	NC	NORMALLY CLOSED
DDC	DIRECT DIGITAL CONTROL	NIC	NOT IN CONTRACT
DEFL	DEFLECTION	NO	NORMALLY OPEN
DN	DOWN	OAD	OUTSIDE AIR DAMPER
DP	DEW POINT	OC	ON CENTER DISTANCE
DWDI	DOUBLE WIDTH DOUBLE INLET	OSA	OUTSIDE AIR
DWG	DRAWING	PH	PHASE
EA	EXHAUST AIR	PP	POLYPROPYLENE
EAD	EXHAUST AIR DAMPER	PSI	POUNDS PER SQUARE INCH
EAT	ENTERING AIR TEMPERATURE	PVC	POLYVINYL CHLORIDE
EDB	ENTERING DRY BULB	PVS	PVC COATED STEEL
EFF	EFFICIENCY	R (RAD)	RADIUS
EFT	ENTERING FLUID TEMPERATURE	RA	RETURN AIR
ELEC	ELECTRIC(AL)	RAD	RETURN AIR DAMPER
ELEV	ELEVATION	REV	REVISION
ENGR	ENGINEER	RH	RELATIVE HUMIDITY
EQ	EQUAL	RPM	REVOLUTIONS PER MINUTE
EQUIP	EQUIPMENT	SA	SUPPLY AIR
ESP	EXTERNAL STATIC PRESSURE	SCFM	STANDARD CUBIC FEET PER MINUTE
EWB	ENTERING WET BULB	SD	SMOKE DAMPER
EWT	ENTERING WATER TEMPERATURE	SECT	SECTION
EX	EXTRACTOR	SENS	SENSIBLE
EXH	EXHAUST	SIM	SIMILAR
EXIST	EXISTING	SP	STATIC PRESSURE
EXP	EXPANSION	SPEC	SPECIFICATION
F	DEGREES FAHRENHEIT	SQ	SQUARE
FC	FORWARD CURVED	SF	SQUARE FOOT(FEET)
FIG	FIGURE	SQ IN	SQUARE INCH(ES)
FILT	FILTER	SS	STAINLESS STEEL
FLEX	FLEXIBLE	STL	STEEL
FPD	FLUID PRESSURE DROP	STRUCT	STRUCTUR(E)(AL)
FPM	FEET PER MINUTE	SWP	SINGLE WALL PLENUM
FPS	FEET PER SECOND	SWSI	SINGLE WIDTH SINGLE INLET
FT	FEET/FOOT	TEMP	TEMPERATURE
FTR	FINNED TUBE RADIATOR	TSP	TOTAL STATIC PRESSURE
FU	FIXTURE UNIT	TYP	TYPICAL
FUT	FUTURE	V	VOLTS
FV	FACE VELOCITY	VD	VOLUME DAMPER
GA	GAGE/GAUGE	VEL	VELOCITY
GAL	GALLON	VERT	VERTICAL
GALV	GALVANIZED	VFD	VARIABLE FREQUENCY DRIVE
GLY	GLYCOL	VTR	VENT THROUGH ROOF
GPH	GALLONS PER HOUR	W	WIDTH
GPM	GALLONS PER MINUTE	WG	WATER GAUGE
H	HEIGHT	WPD	WATER PRESSURE DROP
HORIZ	HORIZONTAL	WTD	WATER TEMPERATURE DROP
HP	HORSEPOWER	WTR	WATER TEMPERATURE RISE
HTG	HEATING	W/	WITH
ID	INSIDE(DIAMETER/DIMENSION)	W/O	WITHOUT

PLUMBING PIPING

W	W	WASTE (ABOVE GRADE OR FLOOR)
W	W	WASTE (BELOW GRADE OR FLOOR)
PW	PW	PUMPED WASTE (ABOVE GRADE OR FLOOR)
PW	PW	PUMPED WASTE (BELOW GRADE OR FLOOR)
SD	SD	STORM DRAIN (ABOVE GRADE OR FLOOR)
SD	SD	STORM DRAIN (BELOW GRADE OR FLOOR)
PSD	PSD	PUMPED STORM DRAIN (ABOVE GRADE OR FLOOR)
PSD	PSD	PUMPED STORM DRAIN (BELOW GRADE OR FLOOR)
OD	OD	OVERFLOW DRAIN (ABOVE GRADE OR FLOOR)
OD	OD	OVERFLOW DRAIN (BELOW GRADE OR FLOOR)
D	D	DRAIN (CONDENSATE/INDIRECT)
	V	VENT
	CW	COLD WATER
	HW	HOT WATER
	RHW	RECIRCULATING HOT WATER
HTW	HTW	140° HOT WATER
RHTW	RHTW	140° RECIRCULATING HOT WATER
G	G	NATURAL GAS (LOW PRESSURE)
MG	MG	NATURAL GAS (MEDIUM PRESSURE)
GV	GV	GAS VENT
RWS	RWS	RAINWATER SUPPLY
NPW	NPW	NON-POTABLE WATER (FOR FLUSH VALVES)

PLUMBING SYMBOLS

TB		THRUST BLOCK
CO	CO	CLEANOUT
WCO	WCO	WALL CLEANOUT
FCO	FCO	FLOOR CLEANOUT
CTG	CTG	CLEANOUT TO GRADE
FD	FD	FLOOR DRAIN
AD	AD	AREA DRAIN
CB	CB	CATCH BASIN
FS	FS	FLOOR SINK
RD	RD	ROOF DRAIN
OD	OD	OVERFLOW DRAIN
TD	TD	TRENCH DRAIN

SYMBOLS

A	ACCESS PANEL	K	CAP EXISTING / CAP FOR FUTURE
B	BELOW GRADE / FLOOR	1	NOTE
1	KITCHEN EQUIPMENT TAG	--	EQUIPMENT TAG
1 / W	RISER DESIGNATION		RISER NUMBER / RISER TYPE
1 / P501	DETAIL DESIGNATION		DETAIL NUMBER / SHEET NUMBER

MISC. FITTINGS & SYMBOLS

- DIRECTION OF FLOW
- DIRECTION OF SLOPE
- PIPE SLEEVE
- REDUCER
- ANCHOR
- ELBOW (90°)
- ELBOW (45°)
- TEE
- CROSS
- PIPING CONNECTIONS
- JOINT OR COUPLING POINT
- UNION
- FLANGED CONNECTION
- CAP
- PLUG OR BLIND FLANGE
- RISER
- ELBOW UP
- ELBOW DOWN
- TEE UP
- TEE DOWN
- HORIZONTAL TEE
- FLEXIBLE CONNECTION
- BALL JOINT
- MC — MECHANICAL COUPLING

GENERAL NOTE

THIS IS A STANDARD LEGEND SHEET, THEREFORE, SOME SYMBOLS MAY APPEAR ON THIS SHEET THAT DO NOT APPEAR ON THE DRAWINGS.

MISC. VALVES & COCKS

- SHUT-OFF VALVE
- S — GLOBE VALVE
- SHUT-OFF VALVE W/ TAMPER SWITCH
- TRIPLE DUTY VALVE
- CHECK VALVE
- 2-WAY CONTROL VALVE
- 3-WAY CONTROL VALVE
- BALANCING VALVE
- FC — FLOW CONTROL VALVE
- S — SOLENOID VALVE
- PRESSURE REDUCING VALVE
- MAV, AAV — AIR VENT (MANUAL/AUTOMATIC)
- RELIEF VALVE
- STRAINER
- STRAINER W/ BLOWDOWN
- DV — DRAIN VALVE
- HB — HOSE BIBB
- WH — WALL HYDRANT
- G, GH — GROUND HYDRANT
- F&T/IB — STEAM TRAP
- PRESSURE GAUGE
- PRESSURE/TEMPERATURE TEST PLUG
- I — THERMOMETER
- F — FLOW SWITCH
- T — TEMPERATURE TRANSMITTER
- S (SIZE) — SHOCK ARRESTOR
- V — VACUUM BREAKER
- WFM — WATER FLOW METER
- RPBA — REDUCED PRESSURE BACKFLOW ASSEMBLY
- DCVA — DOUBLE CHECK VALVE ASSEMBLY
- DCDA — DOUBLE CHECK DETECTOR ASSEMBLY
- BWV — BACKWATER VALVE
- UG — UNDERGROUND GATE VALVE W/BOX
- PIV — UNDERGROUND GATE W/POST INDICATOR
- OUTSIDE SCREW & YOKE
- Y PATTERN BOILER BLOWDOWN VALVE
- NON-RETURN STOP VALVE
- QUICK OPENING BOILER BLOWDOWN VALVE

PIVOT ARCHITECTURE

REGISTERED PROFESSIONAL ENGINEER 18329PE OREGON JAN 15 1986 DOUGLAS P. COLLINS 2-8-2016 EXPIRES 12-31-17

IBI GROUP

nova

PAE Portland | San Francisco | Seattle pae-engineers.com

BID SET

4J EUGENE SCHOOL DISTRICT 4J
120 WEST HILLEARD AVENUE, EUGENE, OREGON 97404

RIVER ROAD / EL CAMINO DEL RIO ELEMENTARY SCHOOL

SYMBOLS, LEGENDS AND ABBREVIATIONS - PLUMBING

PROJECT #	1337.00
ISSUE DATE:	2.12.2016
DRAWN:	SC
CHECKED:	PIC
REVISIONS:	

P001

PRINTED ON: 2/11/2016 4:14:12 PM FROM FILE: C:\Revit Local Files\13-1533 MEP15\13-1533 MEP15_lanol.kliszczynski.rvt

© 2014 PIVOT ARCHITECTURE

WASTE PIPING SIZING SCHEDULE

SIZE	MAXIUM DFU COUNT	
	HORIZONTAL	VERTICAL
1-1/4"	UP TO 1 DFU	UP TO 1 DFU
1-1/2"	UP TO 2 DFU	UP TO 2 DFU
2"	UP TO 8 DFU	UP TO 16 DFU
2-1/2"	UP TO 14 DFU	UP TO 32 DFU
3"	UP TO 48 DFU	UP TO 48 DFU
4"	UP TO 216 DFU	UP TO 256 DFU
6"	UP TO 720 DFU	UP TO 1,380 DFU

NOTES:
BASIS OF DESIGN: 2014 OREGON PLUMBING SPECIALTY CODE, CHAPTER 7 "SANITARY DRAINAGE". ALL WASTE PIPING SIZED AT ...1/4"/FT UNLESS OTHERWISE NOTED.

DOMESTIC PIPING SIZING SCHEDULE

SIZE	MAXIUM DFU COUNT	
	FLUSH TANK	FLUSH VALVE
1/2"	UP TO 1 FU	- -
3/4"	UP TO 4 FU	- -
1"	UP TO 12 FU	- -
1-1/4"	UP TO 26 FU	- -
1-1/2"	UP TO 42 FU	- -
2"	UP TO 151 FU	- -
2-1/2"	UP TO 205 FU	- -
3"	UP TO 275 FU	- -

NOTES:
BASIS OF DESIGN: 2014 OREGON PLUMBING SPECIALTY CODE, APPENDIX A "RECOMMENDED RULES FOR SIZING THE WATER SUPPLY SYSTEM". PIPING SIZED ON 4 PSI/100 FT. DROP, INCOMING WATER PRESSURE OF 88 PSI AND VELOCITIES NOT TO EXCEED 8 FT/SEC. (COLD WATER) AND NOT TO EXCEED 5 FT/SEC. (HOT WATER).

NON-POTABLE PIPING SIZING SCHEDULE

SIZE	MAXIUM DFU COUNT	
	NON-FLUSH VALVE	FLUSH VALVE
1/2"	- -	- -
3/4"	- -	- -
1"	- -	- -
1-1/4"	- -	UP TO 1 FU
1-1/2"	- -	UP TO 13 FU
2"	- -	UP TO 95 FU
2-1/2"	- -	UP TO 365 FU
3"	- -	UP TO 559 FU

NOTES:
BASIS OF DESIGN: 2014 OREGON PLUMBING SPECIALTY CODE, APPENDIX A "RECOMMENDED RULES FOR SIZING THE WATER SUPPLY SYSTEM". PIPING SIZED ON 6 PSI/100 FT. DROP, VELOCITIES NOT TO EXCEED 8 FT/SEC. (NON-POTABLE WATER)

PLUMBING FIXTURE SCHEDULE

ITEM	DESCRIPTION	ROUGH-IN SIZE (INCHES)					NOTES
		W	V	NPW	CW	HW	
WC-1	WATER CLOSET	4	2	1-1/4	-	-	WALL HUNG, SUPPLIED BY RAIN WATER 1.28 GPF, CHILDREN ADA
WC-2	WATER CLOSET	4	2	1-1/4	-	-	WALL HUNG, SUPPLIED BY RAIN WATER 1.28 GPF, ADULT ADA
U-1	URINAL	2	1-1/2	1	-	-	WALL HUNG, SUPPLIED BY RAIN WATER 0.5 GPM, ADA
L-1	LAVATORY	2	1-1/2	-	1/2	1/2	TEMPERATURE SELECTION/METERING WALL HUNG, 20"x19", ADA
WS-1	WASH STATION	2	1-1/2	-	1/2	1/2	WALL HUNG,SINGLE BOWL WITH 2 LAV 0.5 GPM, ADA
WS-2	WASH STATION	2	1-1/2	-	1/2	1/2	WALL HUNG,SINGLE BOWL WITH 3 LAV 0.5 GPM, ADA
S-1	SINK	2	1-1/2	-	1/2	1/2	STAINLESS STEEL COUNTER MOUNT, BUBBLER,
S-2	SINK	2	1-1/2	-	1/2	1/2	STAINLESS STEEL COUNTER MOUNT
S-3	SINK	2	1-1/2	-	1/2	1/2	STAINLESS STEEL, DOUBLE BOWL, COUNTER MOUNT
DF-1	DRINKING FOUNTAIN	2	1-1/2	-	1/2	-	DAUL HEIGHT, STAINLESS STEEL WALL MOUNTED
SH-1	SHOWER	2	1-1/2	-	3/4	3/4	FIBERGLASS ENCLOSURE, PRESSURE BALANCE MIXING VALVE, 1.5GPM SHOWER HEAD
MS-1	MOP SINK	3	2	-	3/4	3/4	FLOOR/CORNER MOUNTED, WALL MOUNTED FAUCET W/VACUUM BREAKER & HOSE THREAD OUTLET
WH-1	WALL HYDRANT	-	-	-	3/4	-	REMOVABLE HANDLE, FREEZE PROOF, W/VACUUM BREAKER
WH-2	WALL HYDRANT	-	-	-	1/2	1/2	DUAL TEMPERATURE, FREEZE PROOF, W/VACUUM BREAKER
SB-1	SUPPLY BOX	2	1-1/2	-	1/2	1/2	RECESSED, BOTTOM SUPPLIES, INTEGRAL SHOCK ARRESTOR
SB-2	SUPPLY BOX	2	1-1/2	-	1/2	-	RECESSED, BOTTOM SUPPLIES, INTEGRAL SHOCK ARRESTOR
WSCB-1	WATER SUPPLY CONTROL BOX	-	-	-	1/2	1/2	RECESSED, BOTTOM SUPPLIES, INTEGRAL SHOCK ARRESTOR

KITCHEN EQUIPMENT CONNECTION SCHEDULE

ITEM	DESCRIPTION	ROUGH-IN SIZE (INCHES)				NOTES
		W	CW	HW	G	
19	CUBE ICE MACHINE	-	1/2	-	-	3
20	HAND WASHING SINK	1-1/2	1/2	1/2		2
22	PREP SINK	1-1/2	1/2	1/2		1
30	KETTLE PANTRY FAUCET	-	1/2	1/2	-	
31	CONVECTION STEAMER	-	-	-	-	1 3
33	DOUBLE STACK COMBI-OVEN STEAMERS	2	4(3/4)	-	-	
44	TRIPLE COMPARTMENT SINK	(3) 2	1/2	1/2	-	
46	WAREWASHER WITH BOOSTER HEATER	2	-	1/2	-	
47	HOSE REEL WITH RECESSED CONTROL	-	1/2	1/2	-	
48	WASTE COLLECTOR	2	3/4	3/4	-	1

NOTES:

1. PROVIDE INDIRECT WASTE TO FLOOR SINK.
2. ALL KITCHEN FIXTURES PROVIDED WITH 140°F HOT WATER. PROVIDE SYMMONS 410-B MIXING VALVE AT CW & HW SUPPLIES TO TEMPER OUTLET WATER TO 100 F AT HAND WASH LOCATIONS. SEE KITCHEN PLUMBING PLAN FOR LOCATIONS.
3. PROVIDE BACKFLOW PROTECTION AS REQUIRED BY CODE. ROUTE INDIRECT WASTE TO NEAREST FLOOR SINK.

PLUMBING EQUIPMENT SCHEDULE

ITEM	DESCRIPTION	ELECTRICAL
GWH-101 GWH-102 (DOMESTIC SYSTEM)	GAS WATER HEATER 199 CFH INPUT, 90 GALLON STORAGE 233 GPH RECOVERY @ 100°F RISE BASED ON: LOCHINVAR SHIELD	120 V, 1 PH
DET-101 (DOMESTIC SYSTEM)	DOMESTIC WATER EXPANSION TANK 11 GALLONS ACCEPTANCE VOLUME 18 GALLONS TANK VOLUME BASED ON: ITT WTA SERIES	-
MMV-101 (DOMESTIC SYSTEM)	MASTER MIXING VALVE 23 GPM FLOW RATE, WITH 5 PSI LOSS 140 F INLET TEMPERATURE 120 F OUTLET TEMPERATURE BASED ON: LEONARD NEW GENERATION MIXING VALVE	-
RHWP-101 (DOMESTIC SYSTEM)	RECIRCULATING HOT WATER PUMP IN-LINE CENTRIFUGAL PUMP 3 GPM @ 25 FT HEAD BASED ON: BELL & GOSSETT PL SERIES	2/5 HP 120 V, 1 PH
RHTWP-101 (KITCHEN SYSTEM)	RECIRCULATING HOT WATER PUMP IN-LINE CENTRIFUGAL PUMP 1.1 GPM @ 20 FT HEAD BASED ON: BELL & GOSSETT PL SERIES	1/12 HP 120 V, 1 PH
TP-101 THRU TP-301	ELECTRONIC TRAP PRIMER 1-20 OPENING MANIFOLD CALIBRATED FOR EQUAL WATER DISTRIBUTION, 1/2" OUTLET CONNECTION, TIME CLOCK, SOLENOID VALVE AND VACUUM BREAKER, RECESSED STAINLESS STEEL ENCLOSURE WITH DOOR. BASED ON: PRECISION PLUMBING PRODUCTS PRIMETIME ELECTRONIC TRAP PRIMER, PTS SERIES	120 V, 1 PH
RPBA-1 HVAC MAKE UP)	REDUCED PRESSURE BACKFLOW ASSEMBLY 10 GPM @ 14 PSIG LOSS BASED ON: FEBCO 860 (1")	
RPBA-2 (RWS SYSTEM)	REDUCED PRESSURE BACKFLOW ASSEMBLY 160 GPM @ 12 PSIG LOSS BASED ON: FEBCO 860 (2-1/2")	-
RWTS-101 (RAINWATER SYSTEM SKID)	RAINWATER PUMP/FILTER SKID SYSTEM: PREPACKAGED SKID BASED ON FLOW THERM MODEL FTSS-RW-CL VIBRATION ISOLATION: TYPE 5, 2"MIN. DEFLECTION. ELECTRICAL CONNECTIONS AND CONTROLS BY OTHERS. SINGLE POINT ELECTRICAL CONNECTION	480 V, 3 PH
RWTS-101 (RAINWATER SYSTEM SKID)	RAIN WATER RECLAMATION STORAGE TANK 540 GALLON CAPACITY 48"DIAMETER x 86-1/2"TALL, 17"DIAMETER ACCESS WAY BASED ON: POLYPROCESSING	-
RWTS-101 (RAINWATER SYSTEM SKID)	RAIN WATER HYPO TREATMENT: DUPLEX CHEMICAL FEED PUMPS SIMPLEX MAGNETIC DRIVE RECIRCULATION PUMP WITH NEMA 4 PANEL. ORP CONTROLLER. BASIS OF DESIGN: WATER CONTROL CORP. DISINFECTIONS SYSTEM	(2) 5 HP 480 V, 3 PH
SP-101	SUMP PUMP 50 GPM @ 12 FT HEAD BASED ON: GRUNDFOS	1/2 HP 120 V, 1 PH
RWCTP-101	RAIN WATER CISTERN TRANSFER PUMP 50 GPM @ 18 FT HEAD BASED ON: WEIL	1/2 HP 120 V, 1 PH

PLUMBING DESIGN CRITERIA

DOMESTIC WATER PIPING SYSTEM
BASIS OF DESIGN: 2014 OREGON PLUMBING SPECIALTY CODE, APPENDIX A "RECOMMENDED RULES FOR SIZING THE WATER SUPPLY SYSTEM". PIPING SIZED ON 3 PSI/100 FT. DROP, VELOCITIES NOT TO EXCEED 8 FT/SEC. (COLD WATER) AND NOT TO EXCEED 5 FT/SEC. (HOT WATER).

WASTE AND VENT PIPING SYSTEM
BASIS OF DESIGN: 2014 OREGON PLUMBING SPECIALTY CODE, CHAPTER 7 "SANITARY DRAINAGE". ALL WASTE PIPING SIZED AT %%1331/4"/FT UNLESS OTHERWISE NOTED.

ROOF DRAIN/STORM DRAIN PIPING SYSTEMS
BASIS OF DESIGN: 2014 OREGON PLUMBING SPECIALTY CODE, CHAPTER 11 "STORM DRAINAGE". STORM DRAIN PIPING SIZED AT 1/8" PER FT SLOPE UNLESS OTHERWISE NOTED AND A RAINFALL RATE OF 1.3" / HR.

NATURAL GAS SYSTEM
BASIS OF DESIGN: 2014 OREGON MECHANICAL SPECIALTY CODE, APPENDIX C, "FUEL GAS", SECTION C402 "PIPE SIZING". EQUIVALENT LENGTH OF PIPE: 400 FT (MPG), 50 FT (G)

PIVOT ARCHITECTURE

REGISTERED PROFESSIONAL ENGINEER 18329PE OREGON JULY 15, 1986 DOUGLAS P. COLLIER 2-8-2016 EXPIRES 12-31-17

IBI GROUP

lowa

PAE Portland | San Francisco | Seattle pae-engineers.com

BID SET

EUGENE SCHOOL DISTRICT 4J
120 WEST HILLIEARD AVENUE, EUGENE, OREGON 97404

RIVER ROAD / EL CAMINO DEL RIO ELEMENTARY SCHOOL

EQUIPMENT SCHEDULES - PLUMBING

PROJECT #	1337.00
ISSUE DATE:	2.12.2016
DRAWN:	SC
CHECKED:	PIC

REVISIONS

P002

PRINTED ON: 2/11/2016 4:14:14 PM FROM FILE: C:\Revit Local Files\13-1533 MEP\15_karol.kluczynski.rvt

© 2014 PIVOT ARCHITECTURE

GENERAL NOTES:

A. VERIFY EXACT SIZES, LOCATIONS, INVERTS AND ELEVATIONS PRIOR TO RUNNING ANY PIPE.

B. REFER TO ARCHITECTURAL PLANS FOR EXACT LOCATIONS OF FIXTURES.

C. INSTALL FLOOR DRAINS, FLOOR SINKS, AND FLOOR CLEANOUTS FLUSH WITH FINISHED FLOOR.

D. ALL FLUSH FIXTURES TO BE SERVED WITH NON-POTABLE WATER.

E. ALL WORK SHALL BE COORDINATED WITH ALL TRADES INVOLVED. OFFSETS IN PIPING AND DUCTS (INCLUDING DIVIDED DUCTS) AND TRANSITIONS AROUND OBSTRUCTIONS SHALL B PROVIDED AT NO ADDITIONAL COST TO THE OWNER.

F. ALL DETAILS APPLY TO THIS SHEET WHETHER TAGGED OR NOT.

G. IT SHALL BE THE RESPONSIBILITY OF THIS CONTRACTOR TO CORDINATE THE WORK WITH THAT OF ALL OTHER TRADES, INCLUDING BUT NOT LIMITED TO: ELECTRICAL, SPRINKLER, HVAC, STRUCTURAL AND GENERAL ARCHITECTURE.

H. REFER TO RISER DIAGRAM FOR COMPLETE SIZES, SHUT-OFF VALVE AND WATER HAMMER ARRESTER LOCATIONS.

I. PROVIDE TRAP PRIMER LINES TO FIXTURES AS REQUIRED.

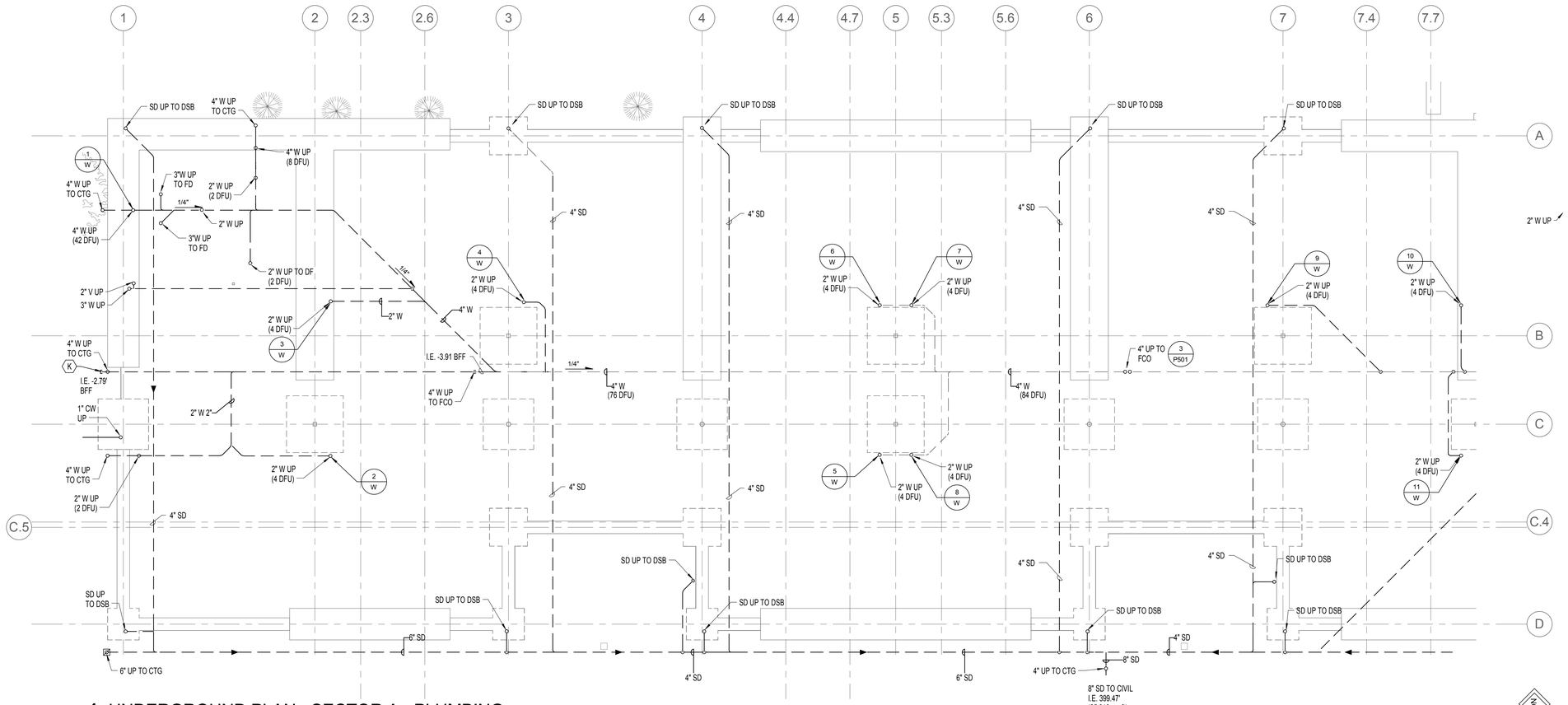

1 UNDERGROUND PLAN - SECTOR A - PLUMBING
1/8" = 1'-0"

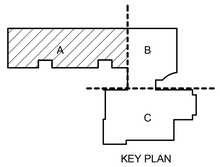

KEY PLAN

PIVOT ARCHITECTURE

REGISTERED PROFESSIONAL ENGINEER 18329PE OREGON JULY 16, 1986 DOUGLAS P. COLLINS
EXPIRES 12-31-17
2-8-2016

IBI GROUP

PAE
Portland | San Francisco | Seattle
pae-engineers.com

BID SET
EUGENE SCHOOL DISTRICT 4J
120 WEST HILLIEARD AVENUE, EUGENE, OREGON 97404
RIVER ROAD / EL CAMINO DEL RIO ELEMENTARY SCHOOL

SECTOR A PLUMBING PLAN - UNDERGROUND

PROJECT #	1537.00
ISSUE DATE:	2.12.2016
DRAWN:	SC
CHECKED:	PKC
REVISIONS	

P101

PRINTED ON: 2/11/2016 4:14:17 PM FROM FILE: C:\Revit Local Files\13-1533 MEP15\13-1533 MEP15_karol.klaczynski.rvt

© 2014 PIVOT ARCHITECTURE

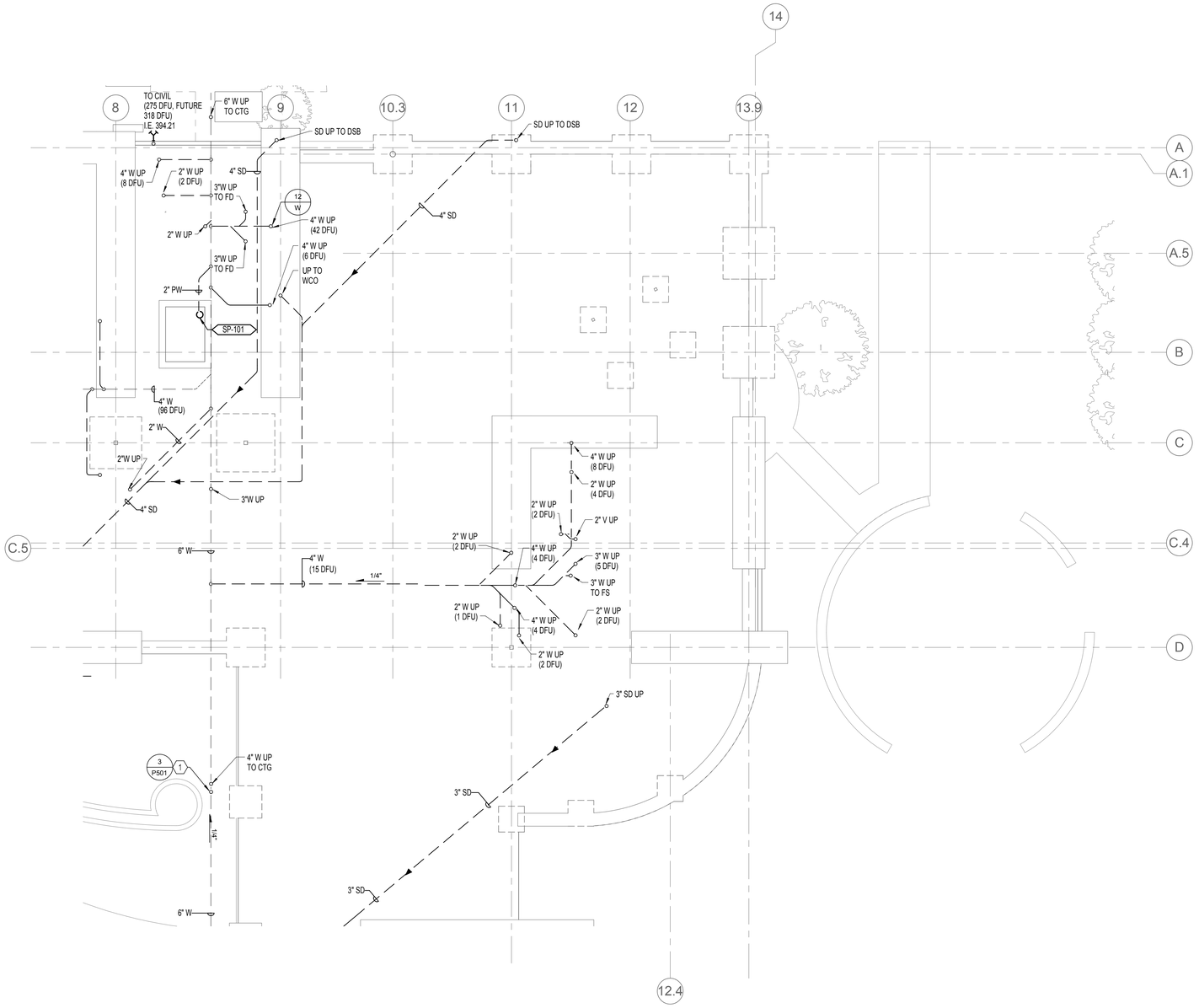

1 UNDERGROUND PLAN - SECTOR B - PLUMBING
1/8" = 1'-0"

NORTH

GENERAL NOTES:

A. VERIFY EXACT SIZES, LOCATIONS, INVERTS AND ELEVATIONS PRIOR TO RUNNING ANY PIPE.

B. REFER TO ARCHITECTURAL PLANS FOR EXACT LOCATIONS OF FIXTURES.

C. INSTALL FLOOR DRAINS, FLOOR SINKS, AND FLOOR CLEANOUTS FLUSH WITH FINISHED FLOOR.

D. ALL FLUSH FIXTURES TO BE SERVED WITH NON-POTABLE WATER.

E. ALL WORK SHALL BE COORDINATED WITH ALL TRADES INVOLVED. OFFSETS IN PIPING AND DUCTS (INCLUDING DIVIDED DUCTS) AND TRANSITIONS AROUND OBSTRUCTIONS SHALL B PROVIDED AT NO ADDITIONAL COST TO THE OWNER.

F. ALL DETAILS APPLY TO THIS SHEET WHETHER TAGGED OR NOT.

G. IT SHALL BE THE RESPONSIBILITY OF THIS CONTRACTOR TO CORDINATE THE WORK WITH THAT OF ALL OTHER TRADES, INCLUDING BUT NOT LIMITED TO: ELECTRICAL, SPRINKLER, HVAC, STRUCTURAL AND GENERAL ARCHITECTURE.

H. REFER TO RISER DIAGRAM FOR COMPLETE SIZES, SHUT-OFF VALVE AND WATER HAMMER ARRESTER LOCATIONS.

I. PROVIDE TRAP PRIMER LINES TO FIXTURES AS REQUIRED.

NOTES:

1. COORDINATE LOCATION WITH LANDSCAPING AND ARCHITECT.

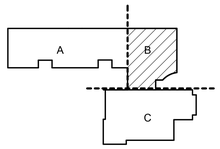

KEY PLAN

PIVOT ARCHITECTURE

REGISTERED PROFESSIONAL ENGINEER
18329PE
OREGON
JANUARY 15, 1982
NICHOLAS P. COLLIER
EXPIRES 12-31-17
2-8-2016

IBI GROUP

Jones

PAE
Portland | San Francisco | Seattle
pae-engineers.com

BID SET

4J
EUGENE SCHOOL DISTRICT 4J
120 WEST HILLEARD AVENUE, EUGENE, OREGON 97404
RIVER ROAD / EL CAMINO DEL RIO ELEMENTARY SCHOOL

SECTOR B PLUMBING PLAN - UNDERGROUND

PROJECT #	1337.00
ISSUE DATE:	2.12.2016
DRAWN:	SC
CHECKED:	PSC

REVISIONS

P103

PRINTED ON: 2/11/2016 4:14:20 PM FROM FILE: C:\Revit Local Files\13-1533 MEP15\13-1533 MEP15_karol.kluczynski.rvt

© 2014 PIVOT ARCHITECTURE

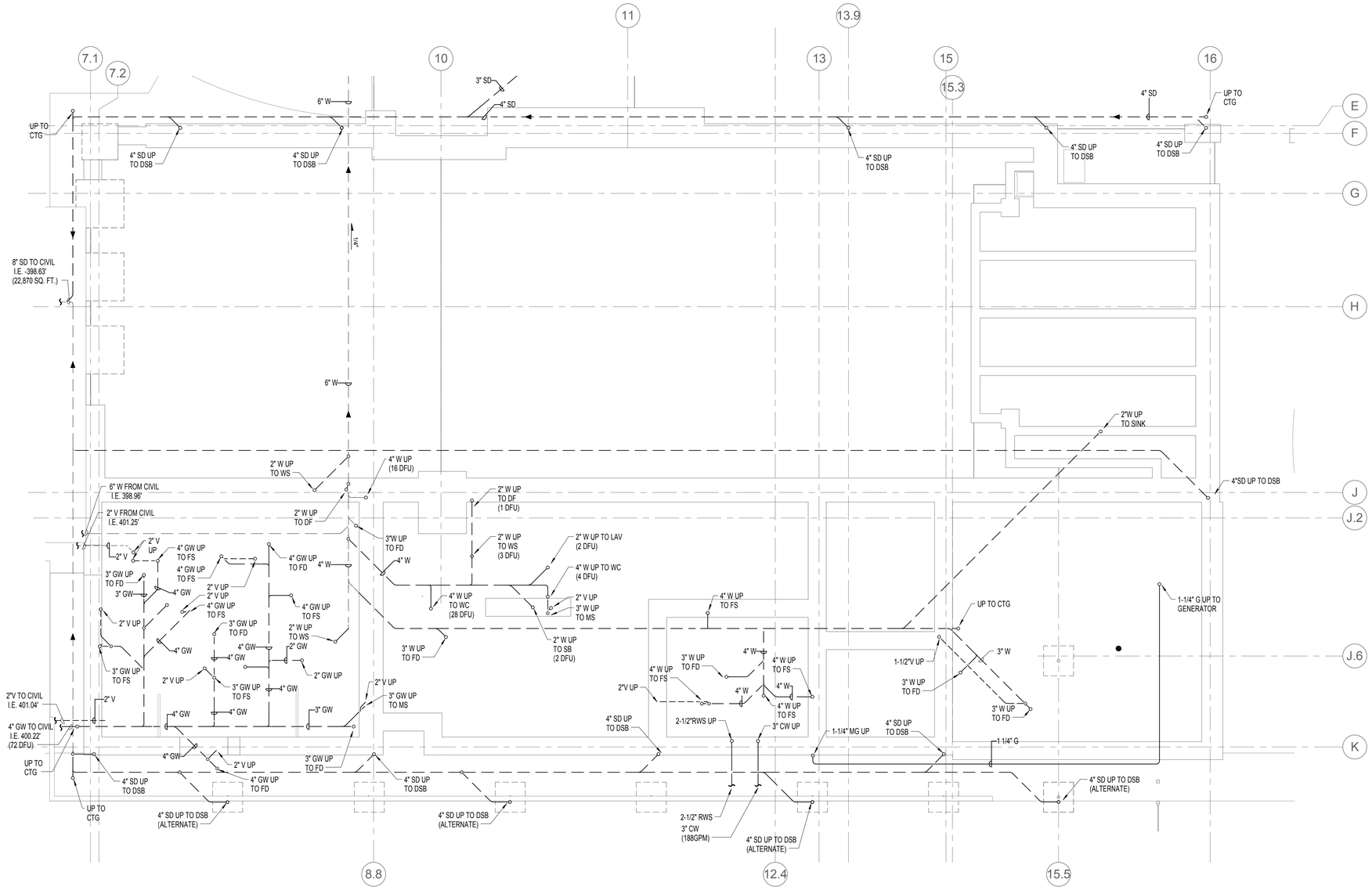

1 UNDERGROUND PLAN - SECTOR C - PLUMBING
1/8" = 1'-0"

GENERAL NOTES:

A. VERIFY EXACT SIZES, LOCATIONS, INVERTS AND ELEVATIONS PRIOR TO RUNNING ANY PIPE.

B. REFER TO ARCHITECTURAL PLANS FOR EXACT LOCATIONS OF FIXTURES.

C. INSTALL FLOOR DRAINS, FLOOR SINKS, AND FLOOR CLEANOUTS FLUSH WITH FINISHED FLOOR.

D. ALL FLUSH FIXTURES TO BE SERVED WITH NON-POTABLE WATER.

E. ALL WORK SHALL BE COORDINATED WITH ALL TRADES INVOLVED. OFFSETS IN PIPING AND DUCTS (INCLUDING DIVIDED DUCTS) AND TRANSITIONS AROUND OBSTRUCTIONS SHALL B PROVIDED AT NO ADDITIONAL COST TO THE OWNER.

F. ALL DETAILS APPLY TO THIS SHEET WHETHER TAGGED OR NOT.

G. IT SHALL BE THE RESPONSIBILITY OF THIS CONTRACTOR TO CORDINATE THE WORK WITH THAT OF ALL OTHER TRADES, INCLUDING BUT NOT LIMITED TO: ELECTRICAL, SPRINKLER, HVAC, STRUCTURAL AND GENERAL ARCHITECTURE.

H. REFER TO RISER DIAGRAM FOR COMPLETE SIZES, SHUT-OFF VALVE AND WATER HAMMER ARRESTER LOCATIONS.

I. PROVIDE TRAP PRIMER LINES TO FIXTURES AS REQUIRED.

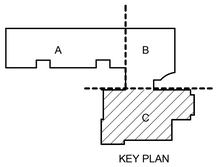

KEY PLAN

PIVOT ARCHITECTURE

REGISTERED PROFESSIONAL ENGINEER 18329PE OREGON JANUARY 15, 1986 NICHOLAS P. COLLINS
EXPIRES 12-31-17
2-8-2016

IBI GROUP

PAE
Portland | San Francisco | Seattle
pae-engineers.com

BID SET
EUGENE SCHOOL DISTRICT 4J
120 WEST HILLIEARD AVENUE, EUGENE, OREGON 97404
RIVER ROAD / EL CAMINO DEL RIO ELEMENTARY SCHOOL

SECTOR C PLUMBING PLAN - UNDERGROUND

PROJECT #	1537.00
ISSUE DATE:	2.12.2016
DRAWN:	SC
CHECKED:	PIC

REVISIONS

P105

PRINTED ON: 2/11/2016 4:14:23 PM FROM FILE: C:\Revit Local Files\13-1533 MEP15\13-1533 MEP15_karol.kluczynski.rvt

© 2014 PIVOT ARCHITECTURE

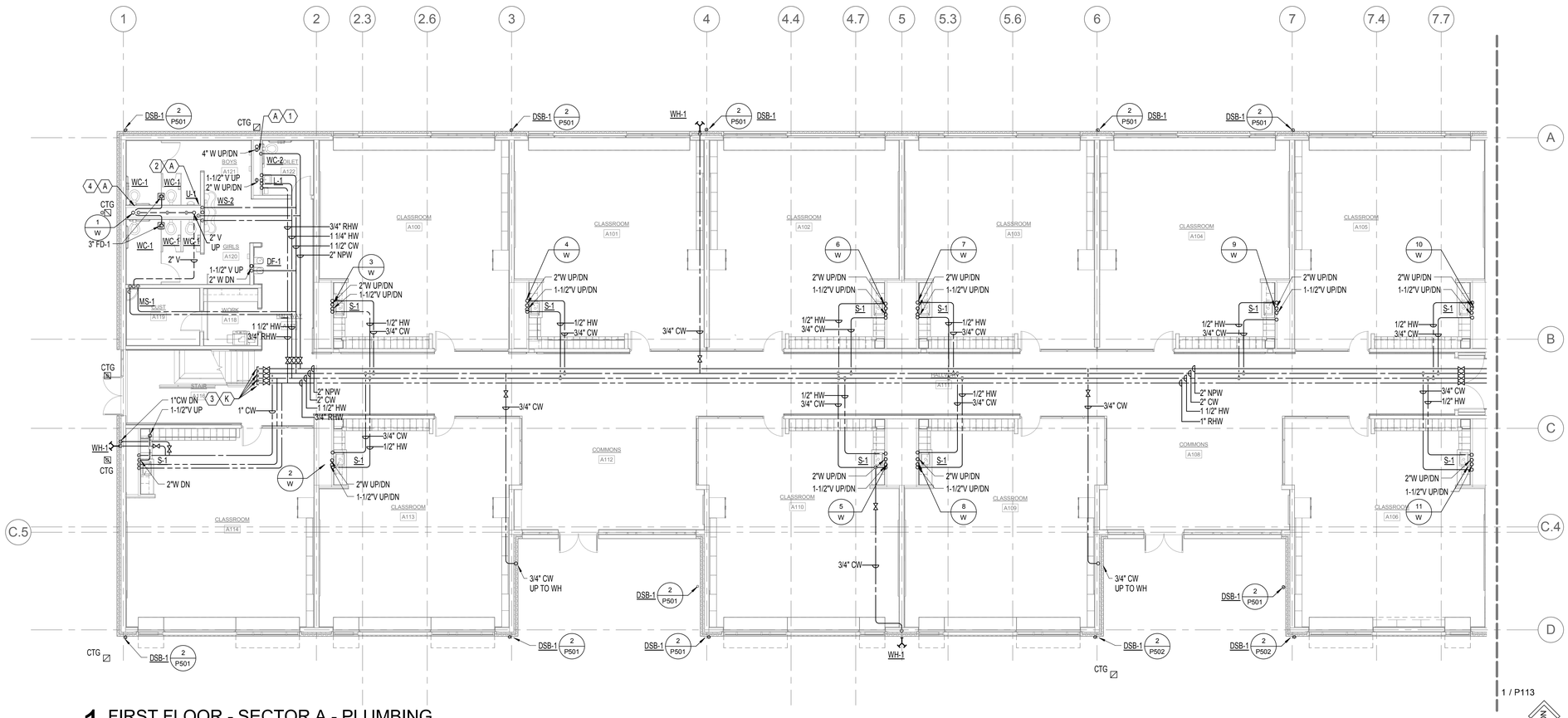

1 FIRST FLOOR - SECTOR A - PLUMBING
1/8" = 1'-0"

GENERAL NOTES:

A. VERIFY EXACT SIZES, LOCATIONS, INVERTS AND ELEVATIONS PRIOR TO RUNNING ANY PIPE.

B. REFER TO ARCHITECTURAL PLANS FOR EXACT LOCATIONS OF FIXTURES.

C. INSTALL FLOOR DRAINS, FLOOR SINKS, AND FLOOR CLEANOUTS FLUSH WITH FINISHED FLOOR.

D. ALL FLUSH FIXTURES TO BE SERVED WITH NON-POTABLE WATER.

E. ALL WORK SHALL BE COORDINATED WITH ALL TRADES INVOLVED. OFFSETS IN PIPING AND DUCTS (INCLUDING DIVIDED DUCTS) AND TRANSITIONS AROUND OBSTRUCTIONS SHALL B PROVIDED AT NO ADDITIONAL COST TO THE OWNER.

F. ALL DETAILS APPLY TO THIS SHEET WHETHER TAGGED OR NOT.

G. IT SHALL BE THE RESPONSIBILITY OF THIS CONTRACTOR TO CORDINATE THE WORK WITH THAT OF ALL OTHER TRADES, INCLUDING BUT NOT LIMITED TO: ELECTRICAL, SPRINKLER, HVAC, STRUCTURAL AND GENERAL ARCHITECTURE.

H. REFER TO RISER DIAGRAM FOR COMPLETE SIZES, SHUT-OFF VALVE AND WATER HAMMER ARRESTER LOCATIONS.

I. PROVIDE TRAP PRIMER LINES TO FIXTURES AS REQUIRED.

NOTES:

1. PROVIDE WATER HAMMER ARRESTOR & SHUT OFF VALVES BEHIND ACCESS PANEL. COORDINATE ACCESS PANEL LOCATION AND FINISH WITH ARCHITECT.

2. PROVIDE SHUT OFF VALVE BEHIND ACCESS PANEL. COORDINATE ACCESS PANEL LOCATION AND FINISH WITH ARCHITECT.

3. CAPPED 1-1/2" CW, 1-1/4" HW, 1" RHW AND 2" NPW FOR FUTURE CONNECTION. VALVES TO BE N.C.

4. PROVIDE WATER HAMMER ARRESTOR BEHIND ACCESS PANEL. COORDINATE ACCESS PANEL LOCATION AND FINISH WITH ARCHITECT.

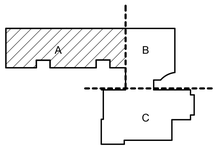

KEY PLAN

PIVOT ARCHITECTURE

REGISTERED PROFESSIONAL ENGINEER
18329PE
OREGON
NOV 15 1988
NICHOLAS P. COLLINS
EXPIRES 12-31-17
2-8-2016

IBI GROUP

iowa

PAE
Portland | San Francisco | Seattle
pae-engineers.com

BID SET

EUGENE SCHOOL DISTRICT 4J
120 WEST HILLIEARD AVENUE, EUGENE, OREGON 97404

RIVER ROAD / EL CAMINO DEL RIO ELEMENTARY SCHOOL

SECTOR A PLUMBING PLAN - FIRST FLOOR

PROJECT #	1337.00
ISSUE DATE:	2.12.2016
DRAWN:	SC
CHECKED:	PRC

REVISIONS

P111

PRINTED ON: 2/11/2016 4:14:29 PM FROM FILE: C:\Revit Local Files\13-1533 MEP15\13-1533 MEP15_karol.kiuczynski.rvt

© 2014 PIVOT ARCHITECTURE

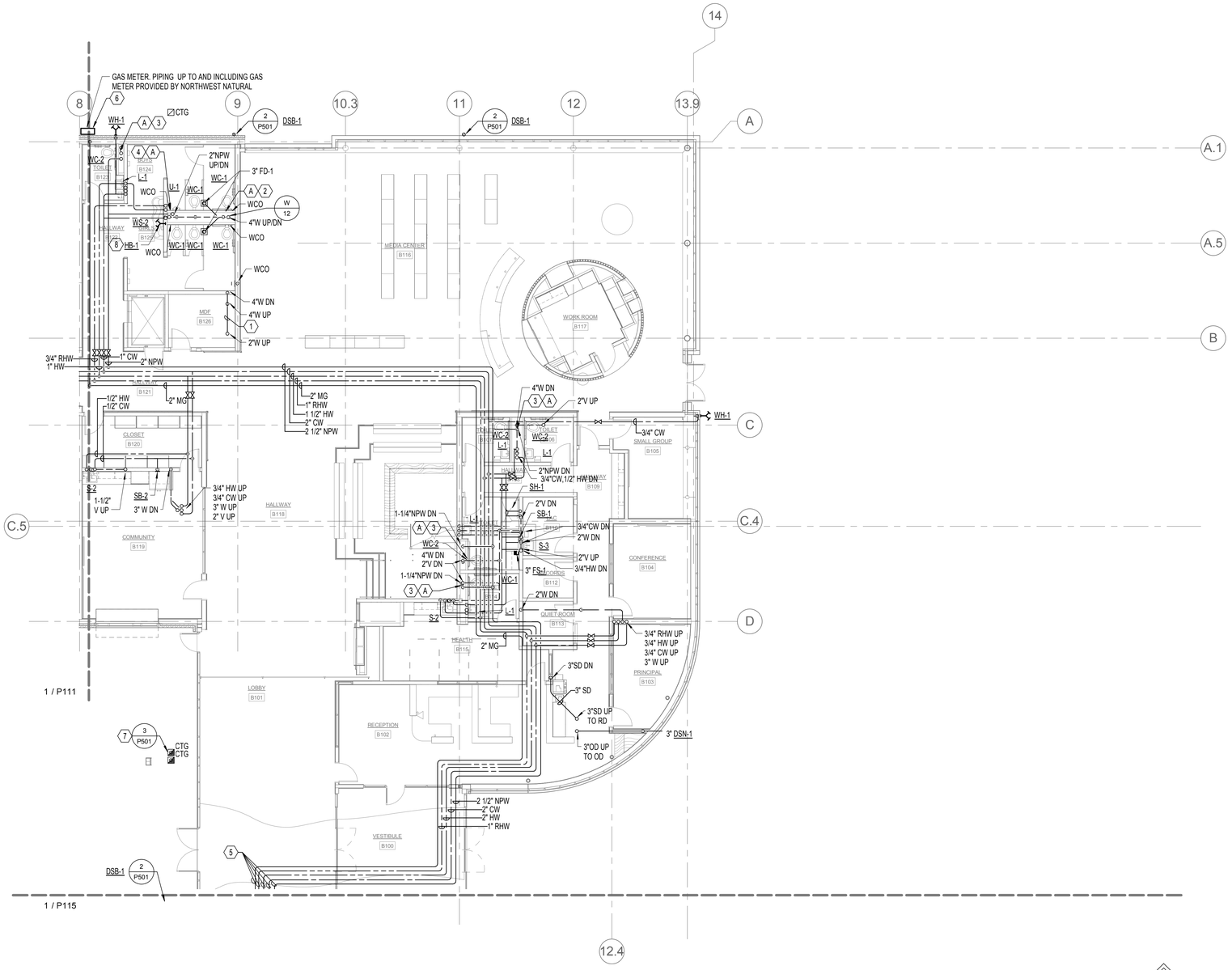

1 FIRST FLOOR - SECTOR B - PLUMBING
1/8" = 1'-0"

NORTH

GENERAL NOTES:

A. VERIFY EXACT SIZES, LOCATIONS, INVERTS AND ELEVATIONS PRIOR TO RUNNING ANY PIPE.

B. REFER TO ARCHITECTURAL PLANS FOR EXACT LOCATIONS OF FIXTURES.

C. INSTALL FLOOR DRAINS, FLOOR SINKS, AND FLOOR CLEANOUTS FLUSH WITH FINISHED FLOOR.

D. ALL FLUSH FIXTURES TO BE SERVED WITH NON-POTABLE WATER.

E. ALL WORK SHALL BE COORDINATED WITH ALL TRADES INVOLVED. OFFSETS IN PIPING AND DUCTS (INCLUDING DIVIDED DUCTS) AND TRANSITIONS AROUND OBSTRUCTIONS SHALL B PROVIDED AT NO ADDITIONAL COST TO THE OWNER.

F. ALL DETAILS APPLY TO THIS SHEET WHETHER TAGGED OR NOT.

G. IT SHALL BE THE RESPONSIBILITY OF THIS CONTRACTOR TO CORDINATE THE WORK WITH THAT OF ALL OTHER TRADES, INCLUDING BUT NOT LIMITED TO: ELECTRICAL, SPRINKLER, HVAC, STRUCTURAL AND GENERAL ARCHITECTURE.

H. REFER TO RISER DIAGRAM FOR COMPLETE SIZES, SHUT-OFF VALVE AND WATER HAMMER ARRESTER LOCATIONS.

I. PROVIDE TRAP PRIMER LINES TO FIXTURES AS REQUIRED.

NOTES:

1. PROVIDE DRIP PROTECTION, VIA DRIP PAN.

2. PROVIDE WATER HAMMER ARRESTOR LOCATED BEHIND ACCESS PANEL. COORDINATE ACCESS PANEL LOCATION AND FINISH WITH ARCHITECT.

3. PROVIDE WATER HAMMER ARRESTOR & SHUT OFF VALVES BEHIND ACCESS PANEL.

4. PROVIDE SHUTOFF VALVE BEHIND ACCESS PANEL. COORDINATE ACCESS PANEL LOCATION AND FINISH WITH ARCHITECT.

5. EXPANSION JOINT/SEISMIC CONNECTORS SHALL BE COORDINATED WITH STRUCTURAL ENGINEER AT ALL PIPING CROSSING EXPANSION JOINTS.

6. PROVIDE GAS SIESMIC VALVE, INSTALL DOWN STREAM OF GAS METER.

7. COORDINATE LOCATION WITH LANDSCAPING AND ARCHITECT. COORDINATE WITH CONCRETE AND SCORNE PATTERNS.

8. HOSE BIB MOUNTED UNDER WASH STATION.

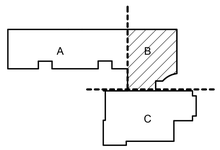

KEY PLAN

PIVOT ARCHITECTURE

REGISTERED PROFESSIONAL ENGINEER 18329PE OREGON JULY 15, 1986 DOUGLAS P. COLLIER
EXPIRES 12-31-17
2-12-2016

IBI GROUP

Iowa

PAE
Portland | San Francisco | Seattle
pae-engineers.com

BID SET

EUGENE SCHOOL DISTRICT 4J
120 WEST HILLIEARD AVENUE, EUGENE, OREGON 97404

RIVER ROAD / EL CAMINO DEL RIO ELEMENTARY SCHOOL

SECTOR B PLUMBING PLAN - FIRST FLOOR

PROJECT #	1337.00
ISSUE DATE:	2.12.2016
DRAWN:	SC
CHECKED:	PIC

REVISIONS:

P113

PRINTED ON: 2/11/2016 4:14:36 PM FROM FILE: C:\Revit Local Files\13-1533 MEP15_karol.kluczynski.rvt

© 2014 PIVOT ARCHITECTURE

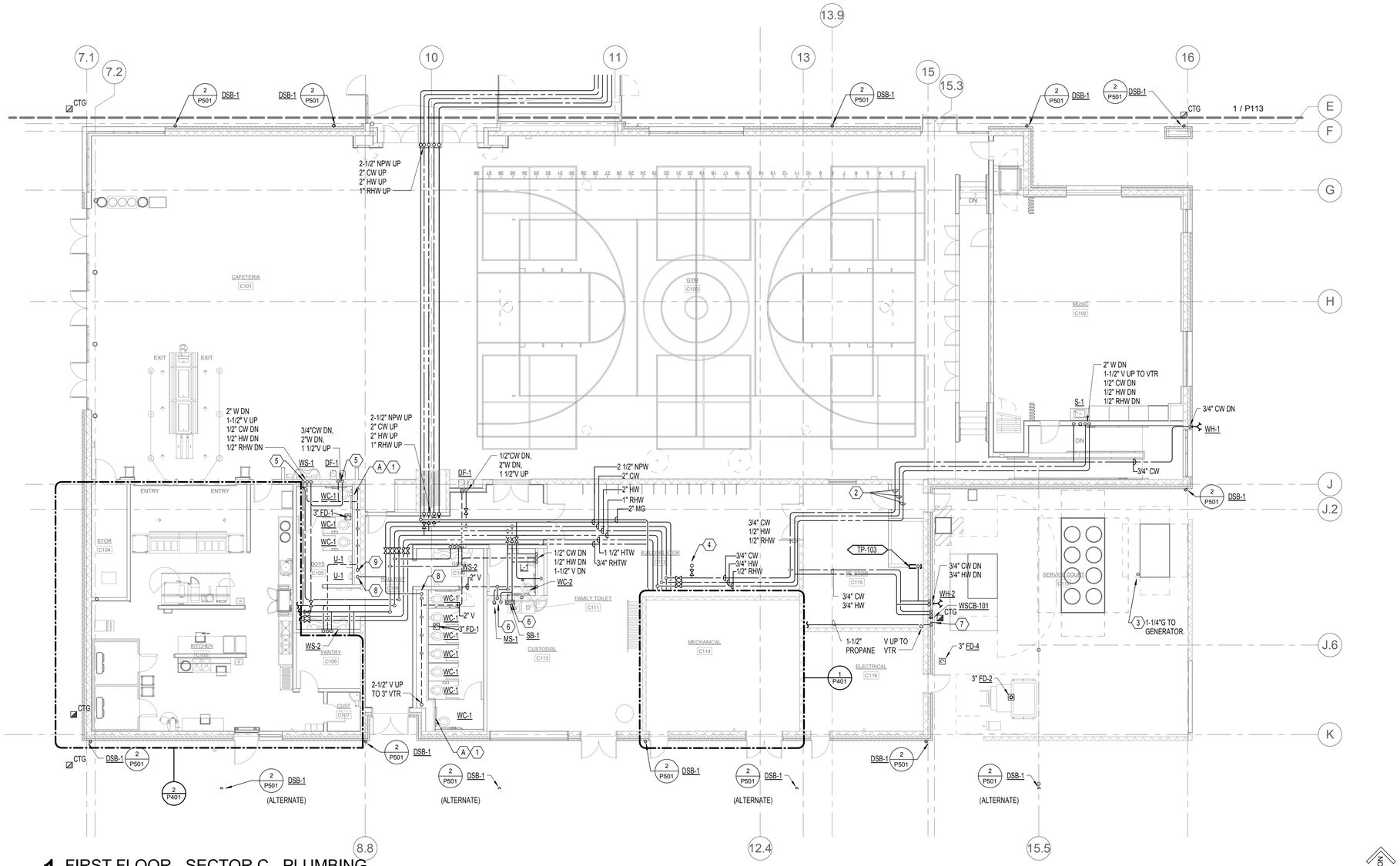

1 FIRST FLOOR - SECTOR C - PLUMBING
1/8" = 1'-0"

GENERAL NOTES:

A. VERIFY EXACT SIZES, LOCATIONS, INVERTS AND ELEVATIONS PRIOR TO RUNNING ANY PIPE.

B. REFER TO ARCHITECTURAL PLANS FOR EXACT LOCATIONS OF FIXTURES.

C. INSTALL FLOOR DRAINS, FLOOR SINKS, AND FLOOR CLEANOUTS FLUSH WITH FINISHED FLOOR.

D. ALL FLUSH FIXTURES TO BE SERVED WITH NON-POTABLE WATER.

E. ALL WORK SHALL BE COORDINATED WITH ALL TRADES INVOLVED. OFFSETS IN PIPING AND DUCTS (INCLUDING DIVIDED DUCTS) AND TRANSITIONS AROUND OBSTRUCTIONS SHALL B PROVIDED AT NO ADDITIONAL COST TO THE OWNER.

F. ALL DETAILS APPLY TO THIS SHEET WHETHER TAGGED OR NOT.

G. IT SHALL BE THE RESPONSIBILITY OF THIS CONTRACTOR TO CORDINATE THE WORK WITH THAT OF ALL OTHER TRADES, INCLUDING BUT NOT LIMITED TO: ELECTRICAL, SPRINKLER, HVAC, STRUCTURAL AND GENERAL ARCHITECTURE.

H. REFER TO RISER DIAGRAM FOR COMPLETE SIZES, SHUT-OFF VALVE AND WATER HAMMER ARRESTER LOCATIONS.

I. PROVIDE TRAP PRIMER LINES TO FIXTURES AS REQUIRED.

NOTES:

1. PROVIDE WATER HAMMER ARRESTOR LOCATED BEHIND ACCESS PANEL. COORDINATE ACCESS PANEL LOCATION AND FINISH WITH ARCHITECT.

2. ROUTE PIPING IN JOIST SPACE, TIGHT TO STRUCTURE.

3. PROVIDE ANODLESS RISER WHERE TRANSITIONS FROM STEEL TO POLY PIPE OCCUR.

4. 3/4" CW UP TO HOSE BIB IN MECHANICAL PLATFORM. COORDINATE LOCATION WITH ALL TRADES.

5. ROUTE PIPING IN FURRED WALL. COORDINATE WITH ARCHITECT.

6. PIPING TO BE SURFACE MOUNTED ON CMU WALL.

7. PROPANE TANK CONNECTION. COORDINATE LOCATIONS WITH ALL TRADES.

8. 2" NPW DN

9. 2-1/2" V UP TO 3" VTR.

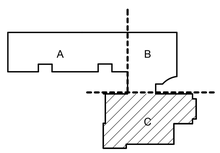

KEY PLAN

PIVOT ARCHITECTURE

REGISTERED PROFESSIONAL ENGINEER
18329PE
DOUGLAS P. COLLINS
EXPIRES 12-31-17

IBI GROUP

PAE
Portland | San Francisco | Seattle
pae-engineers.com

BID SET
EUGENE SCHOOL DISTRICT 4J
120 WEST HILLYARD AVENUE, EUGENE, OREGON 97404
RIVER ROAD / EL CAMINO DEL RIO ELEMENTARY SCHOOL

SECTOR C PLUMBING PLAN - FIRST FLOOR

PROJECT #	1337.00
ISSUE DATE:	2.12.2016
DRAWN:	SC
CHECKED:	PKC

REVISIONS

P115

PRINTED ON: 2/12/2016 10:02:23 AM FROM FILE: C:\Revit Local Files\13-1533 MEP\15-13-1533 MEP15_Travis.lewis.rvt

© 2014 PIVOT ARCHITECTURE

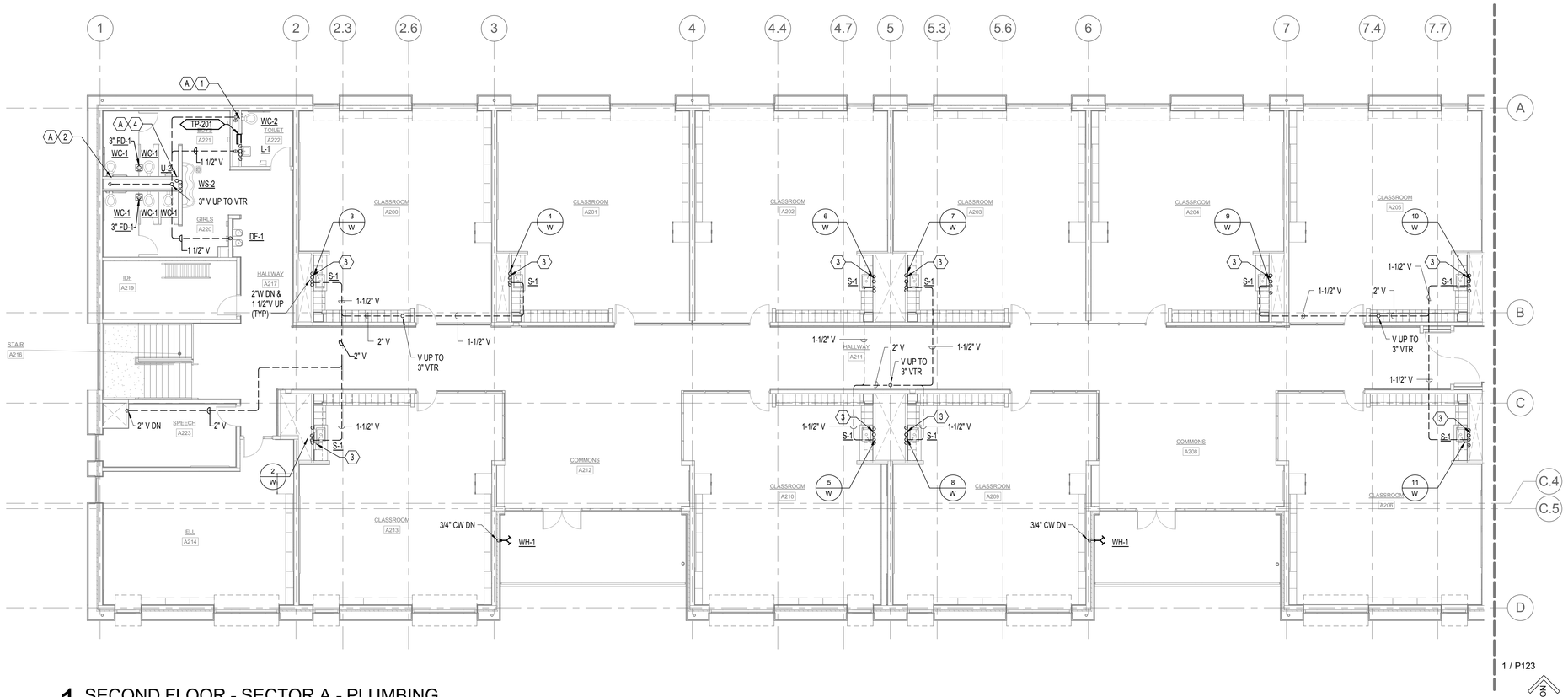

1 SECOND FLOOR - SECTOR A - PLUMBING

1/8" = 1'-0"

GENERAL NOTES:

A. VERIFY EXACT SIZES, LOCATIONS, INVERTS AND ELEVATIONS PRIOR TO RUNNING ANY PIPE.

B. REFER TO ARCHITECTURAL PLANS FOR EXACT LOCATIONS OF FIXTURES.

C. INSTALL FLOOR DRAINS, FLOOR SINKS, AND FLOOR CLEANOUTS FLUSH WITH FINISHED FLOOR.

D. ALL FLUSH FIXTURES TO BE SERVED WITH NON-POTABLE WATER.

E. ALL WORK SHALL BE COORDINATED WITH ALL TRADES INVOLVED. OFFSETS IN PIPING AND DUCTS (INCLUDING DIVIDED DUCTS) AND TRANSITIONS AROUND OBSTRUCTIONS SHALL B PROVIDED AT NO ADDITIONAL COST TO THE OWNER.

F. ALL DETAILS APPLY TO THIS SHEET WHETHER TAGGED OR NOT.

G. IT SHALL BE THE RESPONSIBILITY OF THIS CONTRACTOR TO CORDINATE THE WORK WITH THAT OF ALL OTHER TRADES, INCLUDING BUT NOT LIMITED TO: ELECTRICAL, SPRINKLER, HVAC, STRUCTURAL AND GENERAL ARCHITECTURE.

H. REFER TO RISER DIAGRAM FOR COMPLETE SIZES, SHUT-OFF VALVE AND WATER HAMMER ARRESTER LOCATIONS.

I. PROVIDE TRAP PRIMER LINES TO FIXTURES AS REQUIRED.

NOTES:

1. PROVIDE WATER HAMMER ARRESTOR & SHUT OFF VALVES BEHIND ACCESS PANEL. COORDINATE ACCESS PANEL LOCATION AND FINISH WITH ARCHITECT.

2. PROVIDE WATER HAMMER ARRESTOR LOCATED BEHIND ACCESS PANEL. COORDINATE ACCESS PANEL LOCATION AND FINISH WITH ARCHITECT.

3. 3/4" CW, HW, UP FROM BELOW. 2" W DOWN.

4. PROVIDE WATER HAMMER ARRESTOR LOCATED BEHIND ACCESS PANEL. COORDINATE ACCESS PANEL LOCATION AND FINISH WITH ARCHITECT.

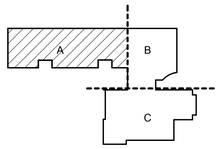

KEY PLAN

PIVOT ARCHITECTURE

REGISTERED PROFESSIONAL ENGINEER 18329PE OREGON JULY 19, 1990 NICHOLAS P. COLLIGAN
EXPIRES 12-31-17

IBI GROUP

Iowa

PAE
Portland | San Francisco | Seattle
pae-engineers.com

BID SET

4J EUGENE SCHOOL DISTRICT 4J
120 WEST HILLEARD AVENUE, EUGENE, OREGON 97404

RIVER ROAD / EL CAMINO DEL RIO ELEMENTARY SCHOOL

SECTOR A PLUMBING PLAN - SECOND FLOOR

PROJECT #	1337.00
ISSUE DATE:	2.12.2016
DRAWN:	SC
CHECKED:	PIC

REVISIONS

P121

PRINTED ON: 2/11/2016 4:14:48 PM FROM FILE: C:\Revit Local Files\13-1533 MEP15\13-1533 MEP15_lanol.kliszczynski.rvt

© 2014 PIVOT ARCHITECTURE

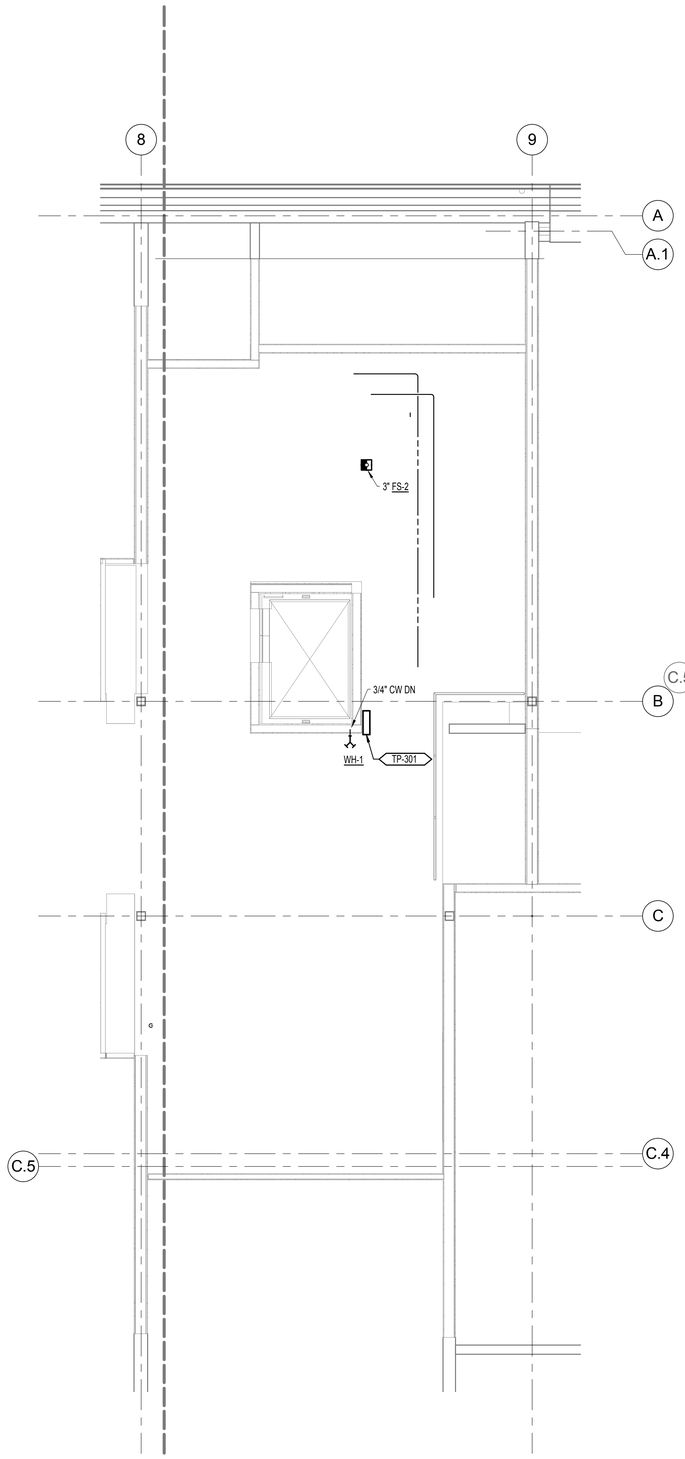

2 SECTOR B MECHANICAL PLATFORM - Plumb
1/4" = 1'-0"

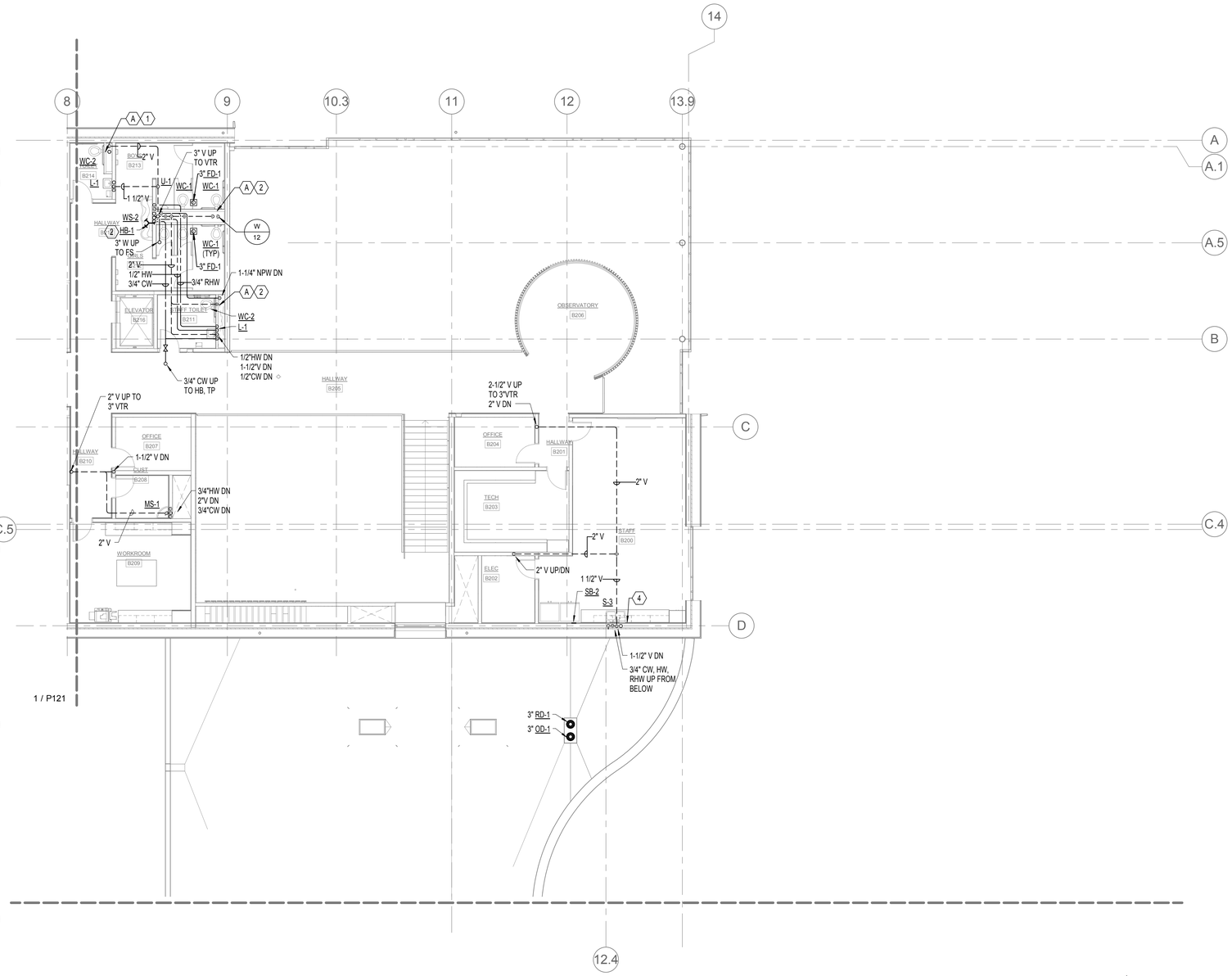

1 SECOND FLOOR - SECTOR B - PLUMBING
1/8" = 1'-0"

NORTH

GENERAL NOTES:

A. VERIFY EXACT SIZES, LOCATIONS, INVERTS AND ELEVATIONS PRIOR TO RUNNING ANY PIPE.

B. REFER TO ARCHITECTURAL PLANS FOR EXACT LOCATIONS OF FIXTURES.

C. INSTALL FLOOR DRAINS, FLOOR SINKS, AND FLOOR CLEANOUTS FLUSH WITH FINISHED FLOOR.

D. ALL FLUSH FIXTURES TO BE SERVED WITH NON-POTABLE WATER.

E. ALL WORK SHALL BE COORDINATED WITH ALL TRADES INVOLVED. OFFSETS IN PIPING AND DUCTS (INCLUDING DIVIDED DUCTS) AND TRANSITIONS AROUND OBSTRUCTIONS SHALL B PROVIDED AT NO ADDITIONAL COST TO THE OWNER.

F. ALL DETAILS APPLY TO THIS SHEET WHETHER TAGGED OR NOT.

G. IT SHALL BE THE RESPONSIBILITY OF THIS CONTRACTOR TO CORDINATE THE WORK WITH THAT OF ALL OTHER TRADES, INCLUDING BUT NOT LIMITED TO: ELECTRICAL, SPRINKLER, HVAC, STRUCTURAL AND GENERAL ARCHITECTURE.

H. REFER TO RISER DIAGRAM FOR COMPLETE SIZES, SHUT-OFF VALVE AND WATER HAMMER ARRESTER LOCATIONS.

I. PROVIDE TRAP PRIMER LINES TO FIXTURES AS REQUIRED.

NOTES:

1. PROVIDE WATER HAMMER ARRESTOR & SHUT OFF VALVES BEHIND ACCESS PANEL. COORDINATE ACCESS PANEL LOCATION AND FINISH WITH ARCHITECT.

2. PROVIDE WATER HAMMER ARRESTOR LOCATED BEHIND ACCESS PANEL. COORDINATE ACCESS PANEL LOCATION AND FINISH WITH ARCHITECT.

3. 3/4" CW UP TO HOSE BIB IN MECHANICAL PLATFORM. COORDINATE LOCATION WITH ALL TRADES.

4. PROVIDE 1/2" HW TO ADJACENT DISHWASHER. ROUTE WASTE FROM DISHWASHER TO TAILPIECE OF SINK.

5. HOSE BIB MOUNTED UNDER WASH STATION.

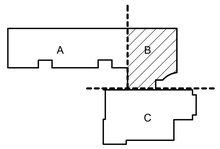

KEY PLAN

PIVOT ARCHITECTURE

REGISTERED PROFESSIONAL ARCHITECT 18329PE OREGON NOV 15, 1994 DOUGLAS P. COLLIER
EXPIRES 12-31-17

IBI GROUP

Iowa

PAE
Portland | San Francisco | Seattle
pae-engineers.com

BID SET
EUGENE SCHOOL DISTRICT 4J
120 WEST HILLYARD AVENUE, EUGENE, OREGON 97404
RIVER ROAD / EL CAMINO DEL RIO ELEMENTARY SCHOOL

SECTOR B PLUMBING PLAN - SECOND FLOOR

PROJECT #	1337.00
ISSUE DATE:	2.12.2016
DRAWN:	SC
CHECKED:	PKC

REVISIONS:

P123

PRINTED ON: 2/11/2016 4:14:53 PM FROM FILE: C:\Revit Local Files\13-1533 MEP15\13-1533 MEP15_karol.kluczynski.rvt

© 2014 PIVOT ARCHITECTURE

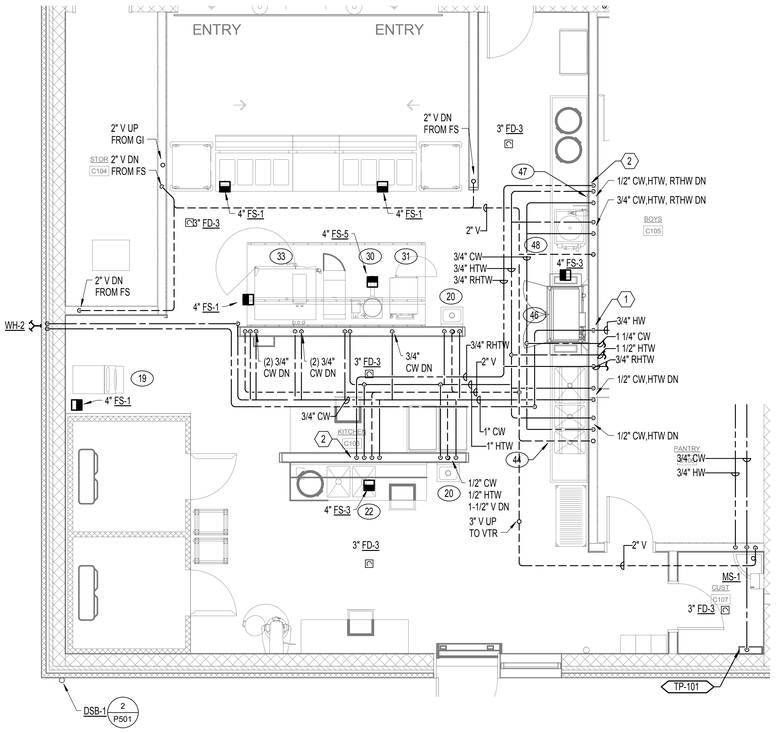

GENERAL NOTES:

A. REFER TO FOOD SERVICE PLANS FOR MORE INFORMATION.

NOTES:

1. PROVIDE WATER PRESSURE REDUCING VALVE ON DOMESTIC HOT WATER LINES SERVING DISHWATER. ROUTE OVERFLOW TO NEAREST FLOOR SINK.

2. PROVIDE BALANCING VALVE ON RHTW LINE. SET TO 0.5GPM.

2 ENLARGED KITCHEN PLAN - PLUMBING

1/4" = 1'-0"

NORTH

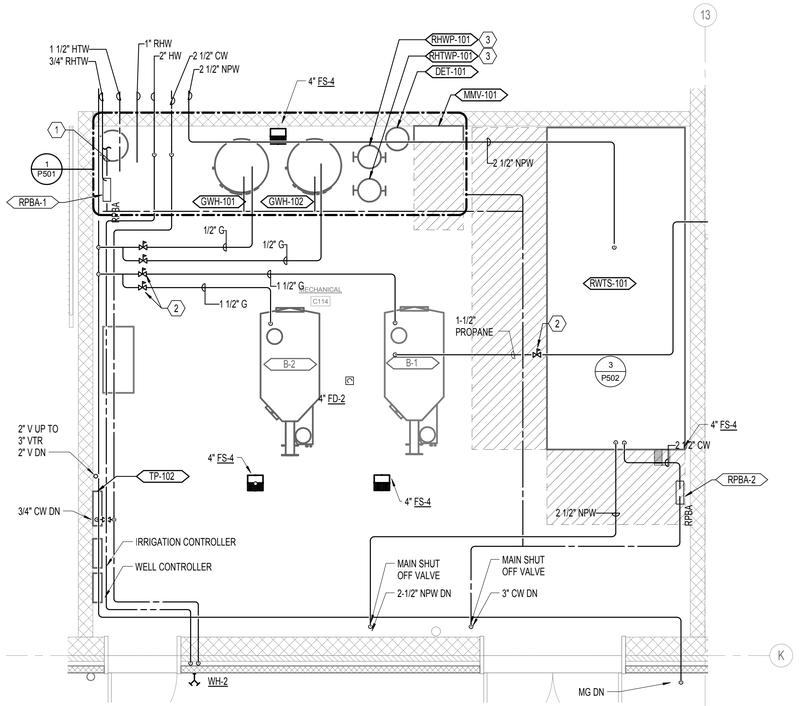

GENERAL NOTES:

A. MECHANICAL EQUIPMENT SHOWN FOR REFERENCE ONLY.
B. REFER TO 1/P501 FOR ADDITIONAL WORK RELATED TO DHW SYSTEM.

NOTES:

1. TO HVAC MAKE UP.
2. LOCATE GAS REGULATOR A MINIMUM OF 10 FEET FROM BOILERS.
3. WALL-MOUNTED. OFFSET FOR CLARITY.

1 ENLARGED FLOOR PLAN - MECHANICAL ROOM C114 - PLUMBING

3/8" = 1'-0"

NORTH

PIVOT ARCHITECTURE

REGISTERED PROFESSIONAL ENGINEER 18329PE OREGON JULY 15, 1986 DOUGLAS P. COLLINS 2-12-2016 EXPIRES 12-31-17

IBI GROUP

Iowa

PAE Portland | San Francisco | Seattle pae-engineers.com

BID SET

4J EUGENE SCHOOL DISTRICT 4J
120 WEST HILLEARD AVENUE, EUGENE, OREGON 97404
RIVER ROAD / EL CAMINO DEL RIO ELEMENTARY SCHOOL

ENLARGED PLANS - PLUMBING

PROJECT #	1337.00
ISSUE DATE:	2.12.2016
DRAWN:	SC
CHECKED:	PIC
REVISIONS:	

P401

PRINTED ON: 2/12/2016 10:02:26 AM FROM FILE: C:\Revit Local Files\13-1533 MEP15\13-1533 MEP15_Travis lewis.rvt

© 2014 PIVOT ARCHITECTURE

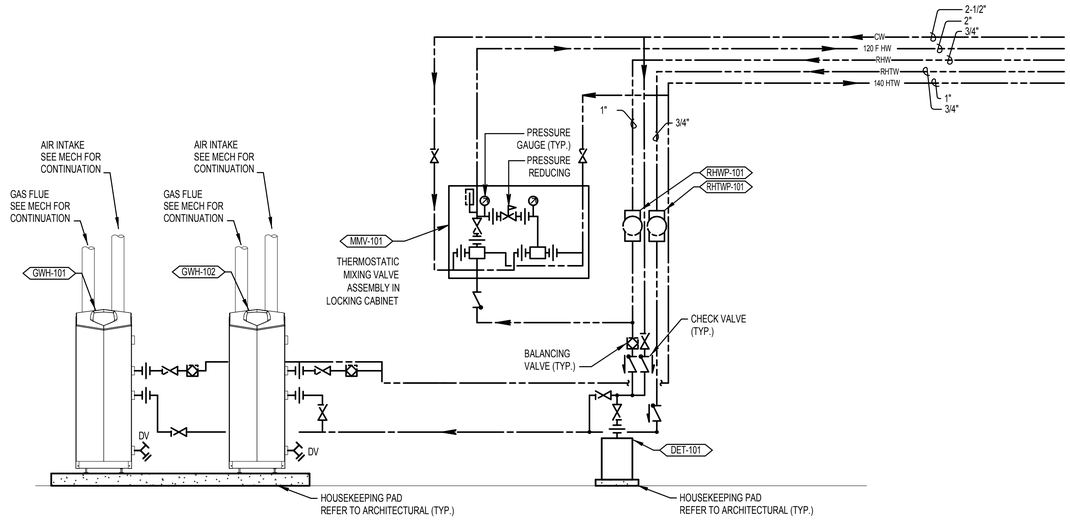

GENERAL NOTES:

A. PROVIDE PIPING CONFIGURATION AND PIPE SIZE BETWEEN SYSTEM COMPONENTS IN ACCORDANCE WITH MANUFACTURERS INSTALLATION GUIDELINES. MAINTAIN EQUAL PRESSURE DROP AT CONNECTIONS TO EACH WATER HEATER.

1 GAS WATER HEATER DETAIL
NONE

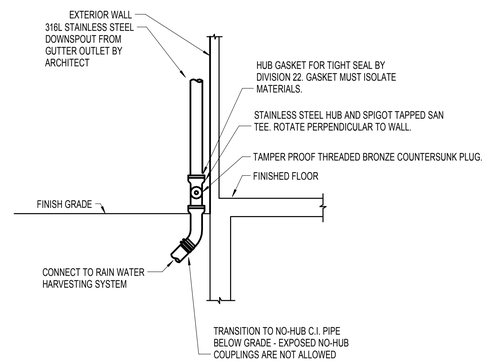

2 DOWNSPOUT CONNECTION
NONE

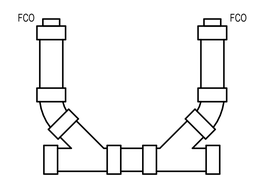

3 BI-DIRECTIONAL CLEANOUT DETAIL
NONE

PIVOT ARCHITECTURE

REGISTERED PROFESSIONAL ENGINEER 18329PE OREGON JANUARY 15, 1986 DOUGLAS P. COLLINS

EXPIRES 12-31-17

IBI GROUP

PAE
Portland | San Francisco | Seattle
pae-engineers.com

BID SET

EUGENE SCHOOL DISTRICT 4J
120 WEST HILLIEARD AVENUE, EUGENE, OREGON 97404

RIVER ROAD / EL CAMINO DEL RIO ELEMENTARY SCHOOL

DETAILS - PLUMBING

PROJECT #	1337.00
ISSUE DATE:	2.12.2016
DRAWN:	SC
CHECKED:	PKC

REVISIONS

P501

PRINTED ON: 2/11/2016 4:15:00 PM FROM FILE: C:\Revit Local Files\13-1533 MEP15\13-1533 MEP15_karol.klucznyski.rvt

© 2014 PIVOT ARCHITECTURE

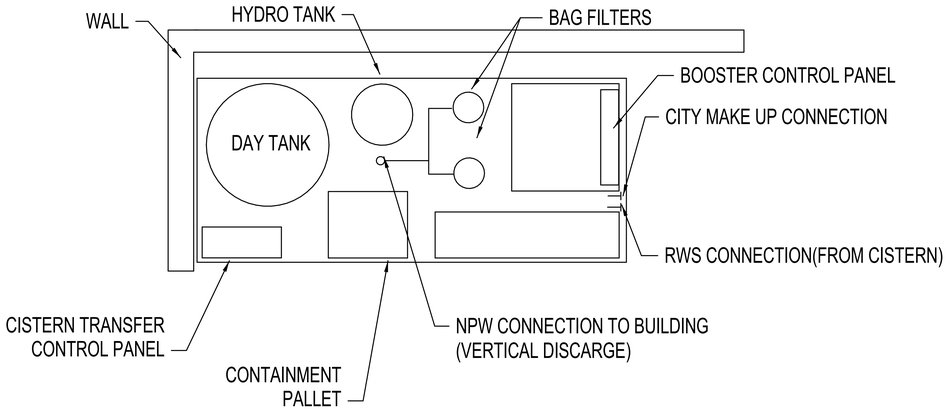

3 RAINWATER SKID DETAIL
N.T.S.

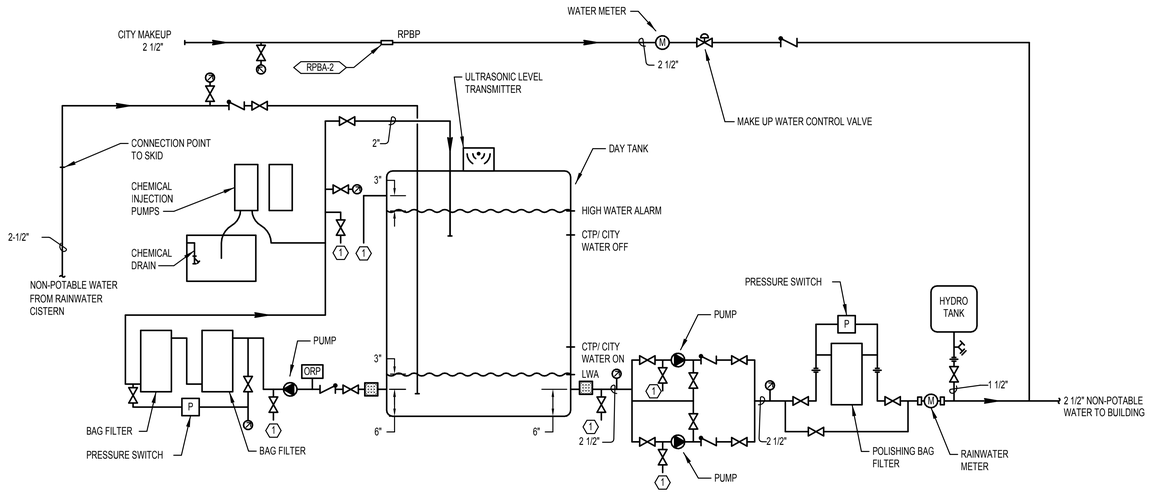

GENERAL NOTE:

A. LOCATE RAINWATER TREATMENT SKID ON TOP OF HOUSEKEEPING PAD.

NOTE:

1. ROUTE TO FLOOR SINK. DRAIN INDIRECTLY.

1 RAINWATER HARVESTING TREATMENT & DISTRIBUTION SYSTEM
N.T.S.

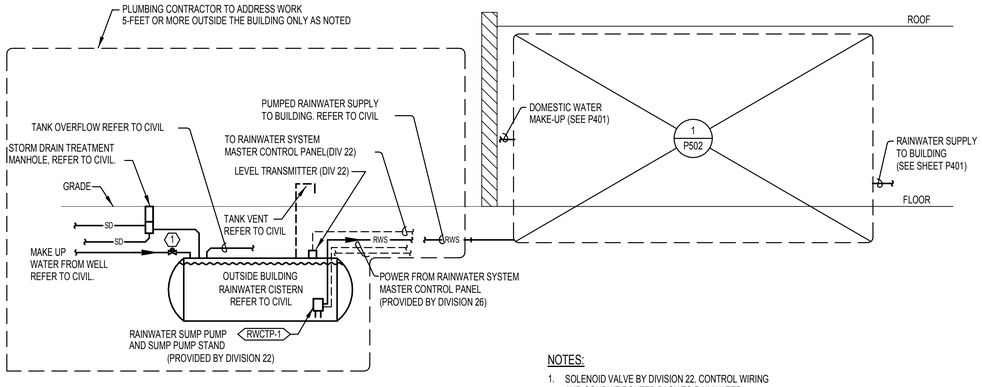

NOTES:

1. SOLENOID VALVE BY DIVISION 22. CONTROL WIRING AND CONDUIT ROUTED BACK TO RAINWATER SYSTEM MASTER CONTROL PANEL.

2 RAINWATER SYSTEM DIAGRAM
N.T.S.

PIVOT ARCHITECTURE

REGISTERED PROFESSIONAL ENGINEER 18329PE OREGON JANUARY 15, 1982 DOUGLAS P. COLLIER 2-12-2016 EXPIRES 12-31-17

IBI GROUP

Iowa

PAE Portland | San Francisco | Seattle pae-engineers.com

BID SET

4J EUGENE SCHOOL DISTRICT 4J
120 WEST HILLEARD AVENUE, EUGENE, OREGON 97404

RIVER ROAD / EL CAMINO DEL RIO ELEMENTARY SCHOOL

DETAILS - PLUMBING

PROJECT #	1337.00
ISSUE DATE:	2.12.2016
DRAWN:	SC
CHECKED:	PIC

REVISIONS

P502

PRINTED ON: 2/11/2016 4:15:02 PM FROM FILE: C:\Revit Local Files\13-1533 MEP15\13-1533 MEP15_karol.kluczynski.rvt

© 2014 PIVOT ARCHITECTURE

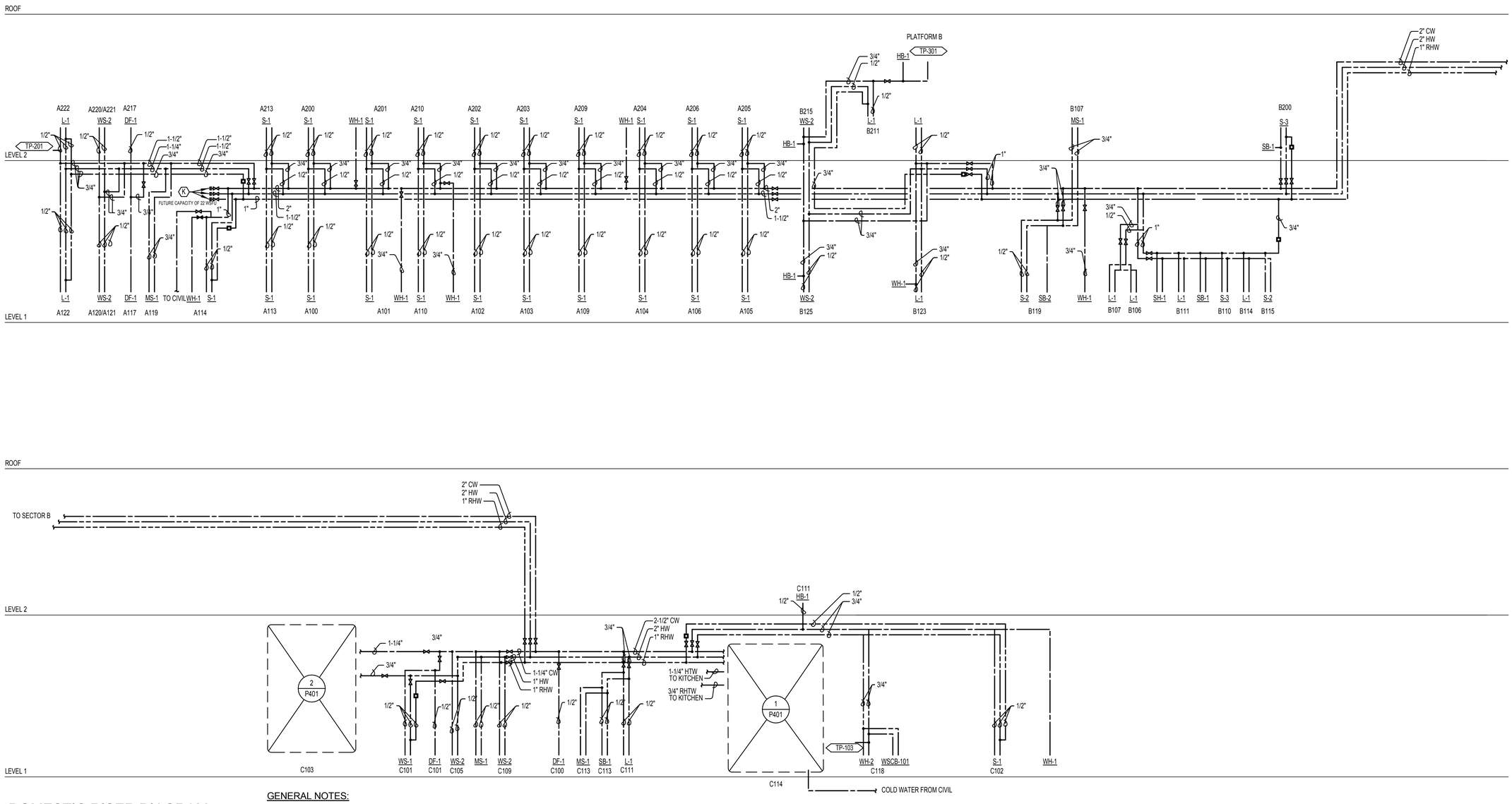

1 DOMESTIC RISER DIAGRAM

NONE

GENERAL NOTES:

1. SET ALL BALANCE VALVES TO 0.5 GPM UNLESS NOTED.

PIVOT ARCHITECTURE

REGISTERED PROFESSIONAL ENGINEER 18329PE OREGON JUNE 15, 1990 THOMAS P. COLLOPY

EXPIRES 12-31-17

IBI GROUP

PAE Portland | San Francisco | Seattle pae-engineers.com

BID SET

EUGENE SCHOOL DISTRICT 4J
120 WEST HILLEARD AVENUE, EUGENE, OREGON 97404

RIVER ROAD / EL CAMINO DEL RIO ELEMENTARY SCHOOL

RISER DIAGRAMS - PLUMBING

PROJECT #	1337.00
ISSUE DATE	2.12.2016
DRAWN	SC
CHECKED	PIC

REVISIONS

P601

PRINTED ON: 2/12/2016 10:02:28 AM FROM FILE: C:\Revit Local Files\13-1533 MEP15\13-1533 MEP15_Travis.lewis.rvt

© 2014 PIVOT ARCHITECTURE

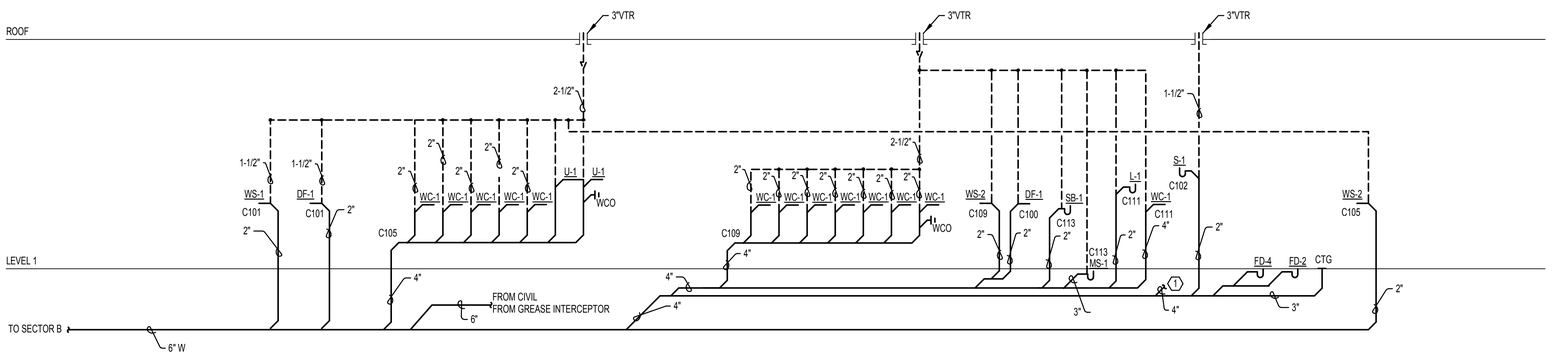

NOTES:

1. FOR FLOOR SINKS AND FLOOR DRAINS IN BOILER ROOM. SEE1/P401 AND 1/P105.

1 WASTE AND VENT RISER DIAGRAM

NONE

PRINTED ON: 2/12/2016 10:17:04 AM FROM FILE: C:\Revit Local Files\13-1533 MEP15\13-1533 MEP15_Travis.levels.rvt

PIVOT ARCHITECTURE

REGISTERED PROFESSIONAL ENGINEER 18329PE THOMAS P. COLLOPY OREGON 2-12-2016 EXPIRES 12-31-17

IBI GROUP

Iowa

PAE Portland | San Francisco | Seattle pae-engineers.com

BID SET

EUGENE SCHOOL DISTRICT 4J
120 WEST HILLYARD AVENUE, EUGENE, OREGON 97404

RIVER ROAD / EL CAMINO DEL RIO ELEMENTARY SCHOOL

RISER DIAGRAMS - PLUMBING

PROJECT #	1337.00
ISSUE DATE:	2.12.2016
DRAWN:	SC
CHECKED:	PVC

REVISIONS:

P602

© 2014 PIVOT ARCHITECTURE

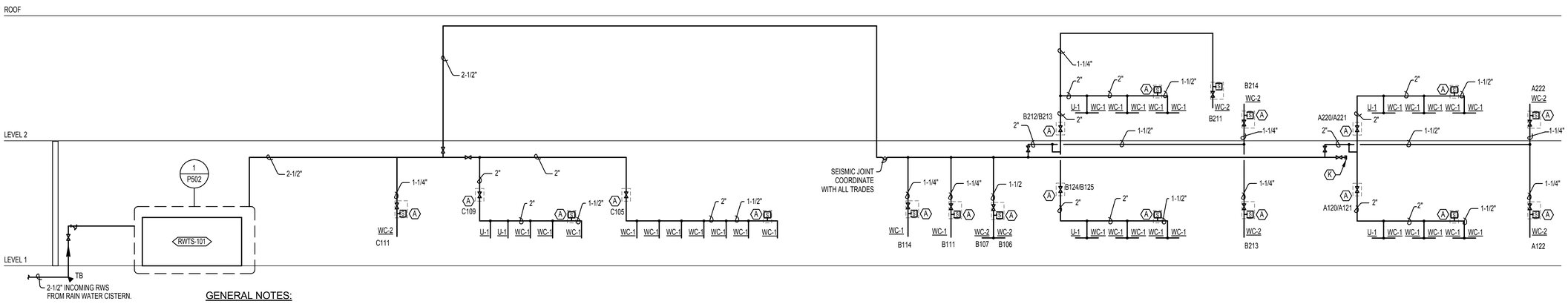

GENERAL NOTES:

1. SIZE SHOCK ARRESTORS IN ACCORDANCE WITH PDI STANDARDS.

1 NON-POTABLE WATER RISER DIAGRAM

NONE

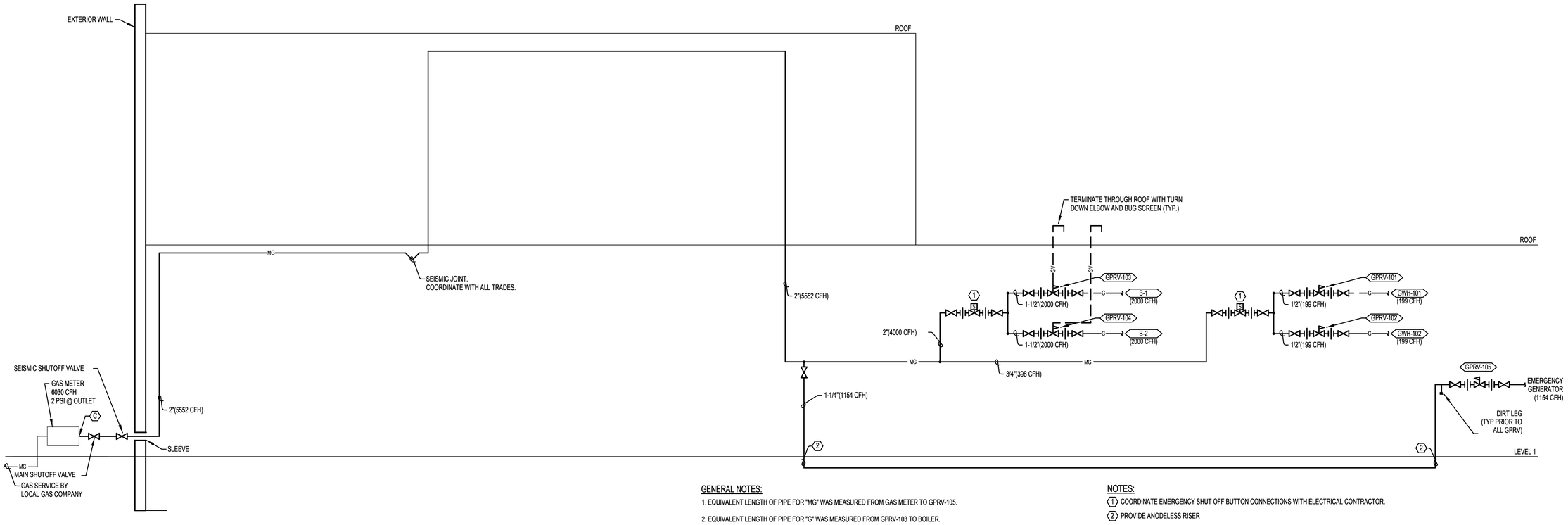

GENERAL NOTES:

1. EQUIVALENT LENGTH OF PIPE FOR "MG" WAS MEASURED FROM GAS METER TO GPRV-105.

2. EQUIVALENT LENGTH OF PIPE FOR "G" WAS MEASURED FROM GPRV-103 TO BOILER.

NOTES:

1. COORDINATE EMERGENCY SHUT OFF BUTTON CONNECTIONS WITH ELECTRICAL CONTRACTOR.
2. PROVIDE ANODELESS RISER

2 GAS RISER DIAGRAM

NONE

PIVOT ARCHITECTURE

REGISTERED PROFESSIONAL ENGINEER 18329PE DOUGLAS P. COLLIER OREGON 2-8-2016 EXPIRES 12-31-17

IBI GROUP

PAE Portland | San Francisco | Seattle pae-engineers.com

BID SET

EUGENE SCHOOL DISTRICT 4J
120 WEST HILLYARD AVENUE, EUGENE, OREGON 97404
RIVER ROAD / EL CAMINO DEL RIO ELEMENTARY SCHOOL

RISER DIAGRAMS - PLUMBING

PROJECT #	1337.00
ISSUE DATE:	2.12.2016
DRAWN:	SC
CHECKED:	PIC

REVISIONS

P603

PRINTED ON: 2/11/2016 4:15:08 PM FROM FILE: C:\Revit Local Files\13-1533 MEP15_karol.kluczynski.rvt

© 2014 PIVOT ARCHITECTURE

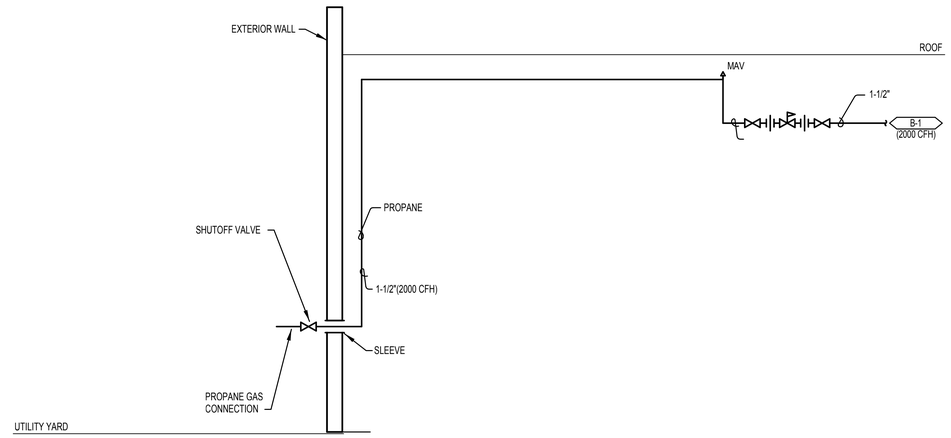

1 PROPANE RISER DIAGRAM
NONE

PRINTED ON: 2/11/2016 4:15:10 PM FROM FILE: C:\Revit Local Files\13-1533 MEP15\13-1533 MEP15_karol.kluczynski.rvt

PIVOT ARCHITECTURE

REGISTERED PROFESSIONAL ENGINEER 18329PE OREGON JANUARY 15, 1986 DOUGLAS P. COLLINS
2-8-2016
EXPIRES 12-31-17

IBI GROUP

PAE
Portland | San Francisco | Seattle
pae-engineers.com

BID SET
EUGENE SCHOOL DISTRICT 4J
120 WEST HILLEARD AVENUE, EUGENE, OREGON 97404
RIVER ROAD / EL CAMINO DEL RIO ELEMENTARY SCHOOL

RISER DIAGRAGMS - PLUMBING

PROJECT #	1337.00
ISSUE DATE	2.12.2016
DRAWN	SC
CHECKED	PIC

REVISIONS

P604

© 2014 PIVOT ARCHITECTURE

STANDARD MECHANICAL ABBREVIATIONS

AF	AIRFOIL	IE	INVERT ELEVATION
AFF	ABOVE FINISHED FLOOR	IN	INCH(ES)
AHP	APPARATUS HOUSING PLENUM	INSUL	INSULATION
ALT	ALTERNATIVE	ISOL	ISOLAT(OR)(ION)
AL	ALUMINUM	KW	KILOWATT
APD	AIR PRESSURE DROP	KWH	KILOWATT HOUR
APPROX	APPROXIMATELY	L	LENGTH
ARCH	ARCHITECT(URAL)	LAT	LEAVING AIR TEMP
AUTO	AUTOMATIC	LB	POUND
BDD	BACKDRAFT DAMPER	LDB	LEAVING DRY BULB
BI	BACKWARD INCLINED	LF	LINEAR FEET
BLDG	BUILDING	LFT	LEAVING FLUID TEMPERATURE
BSMT	BASEMENT	LVG	LEAVING
BTU	BRITISH THERMAL UNIT	LWB	LEAVING WET BULB
BTUH	BRITISH THERMAL UNITS PER HOUR	LWT	LEAVING WATER TEMPERATURE
CFH	CUBIC FEET PER HOUR	MAX	MAXIMUM
CFM	CUBIC FEET PER MINUTE	MBH	THOUSAND BTU PER HOUR
CFS	CUBIC FEET PER SECOND	MECH	MECHANICAL
CLG	CEILING OR COOLING	MFR	MANUFACTURER
CONC	CONCRETE	MIN	MINIMUM
CONN	CONNECT(ION)	MISC	MISCELLANEOUS
CONT	CONTINUE(ED)(UATION)	MTD	MOUNTED
CL	CENTERLINE	NC	NORMALLY CLOSED
DDC	DIRECT DIGITAL CONTROL	NIC	NOT IN CONTRACT
DEFL	DEFLECTION	NO	NORMALLY OPEN
DN	DOWN	OAD	OUTSIDE AIR DAMPER
DP	DEW POINT	OC	ON CENTER DISTANCE
DWDI	DOUBLE WIDTH DOUBLE INLET	OSA	OUTSIDE AIR
DWG	DRAWING	PH	PHASE
EA	EXHAUST AIR	PP	POLYPROPYLENE
EAD	EXHAUST AIR DAMPER	PSI	POUNDS PER SQUARE INCH
EAT	ENTERING AIR TEMPERATURE	PVC	POLYVINYL CHLORIDE
EDB	ENTERING DRY BULB	PVS	PVC COATED STEEL
EFF	EFFICIENCY	R (RAD)	RADIUS
EFT	ENTERING FLUID TEMPERATURE	RA	RETURN AIR
ELEC	ELECTRIC(AL)	RAD	RETURN AIR DAMPER
ELEV	ELEVATION	REV	REVISION
ENGR	ENGINEER	RH	RELATIVE HUMIDITY
EQ	EQUAL	RPM	REVOLUTIONS PER MINUTE
EQUIP	EQUIPMENT	SA	SUPPLY AIR
ESP	EXTERNAL STATIC PRESSURE	SCFM	STANDARD CUBIC FEET PER MINUTE
EWB	ENTERING WET BULB	SD	SMOKE DAMPER
EWT	ENTERING WATER TEMPERATURE	SECT	SECTION
EX	EXTRACTOR	SENS	SENSIBLE
EXH	EXHAUST	SIM	SIMILAR
EXIST	EXISTING	SP	STATIC PRESSURE
EXP	EXPANSION	SPEC	SPECIFICATION
F	DEGREES FAHRENHEIT	SQ	SQUARE
FC	FORWARD CURVED	SF	SQUARE FOOT(FEET)
FIG	FIGURE	SQ IN	SQUARE INCH(ES)
FILT	FILTER	SS	STAINLESS STEEL
FLEX	FLEXIBLE	STL	STEEL
FPD	FLUID PRESSURE DROP	STRUCT	STRUCTUR(E)(AL)
FPM	FEET PER MINUTE	SWP	SINGLE WALL PLENUM
FPS	FEET PER SECOND	SWSI	SINGLE WIDTH SINGLE INLET
FT	FEET/FOOT	TEMP	TEMPERATURE
FTR	FINNED TUBE RADIATOR	TSP	TOTAL STATIC PRESSURE
FU	FIXTURE UNIT	TYP	TYPICAL
FUT	FUTURE	V	VOLTS
FV	FACE VELOCITY	VD	VOLUME DAMPER
GA	GAGE/GAUGE	VEL	VELOCITY
GAL	GALLON	VERT	VERTICAL
GALV	GALVANIZED	VFD	VARIABLE FREQUENCY DRIVE
GLY	GLYCOL	VTR	VENT THROUGH ROOF
GPH	GALLONS PER HOUR	W	WIDTH
GPM	GALLONS PER MINUTE	WG	WATER GAUGE
H	HEIGHT	WPD	WATER PRESSURE DROP
HORIZ	HORIZONTAL	WTD	WATER TEMPERATURE DROP
HP	HORSEPOWER	WTR	WATER TEMPERATURE RISE
HTG	HEATING	W/	WITH
ID	INSIDE(DIAMETER/DIMENSION)	W/O	WITHOUT

FIRE PROTECTION SYMBOLS

FP	FIRE PROTECTION
SPR	FIRE SPRINKLER
DP	DRY PIPE SPRINKLER
PA	PRE-ACTION SYSTEM
WSP	WET STANDPIPE
DSP	DRY STANDPIPE
FDC	FIRE DEPARTMENT CONNECTION
SRC	STANDPIPE ROOF CONNECTION
SO	STANDPIPE OUTLET
	UPRIGHT SPRINKLER HEAD
	PENDANT SPRINKLER HEAD
	SIDEWALL SPRINKLER HEAD
F	FLOW SWITCH
S	SUPERVISED SHUT-OFF VALVE
DPV	DRY PIPE VALVE ASSEMBLY
PAV	PRE-ACTION VALVE ASSEMBLY

SYMBOLS

A	ACCESS PANEL	K	CAP EXISTING / CAP FOR FUTURE
B	BELOW GRADE / FLOOR	1	NOTE
1	KITCHEN EQUIPMENT TAG	--	EQUIPMENT TAG

MISC. FITTINGS & SYMBOLS

	DIRECTION OF FLOW
	DIRECTION OF SLOPE
	PIPE SLEEVE
	REDUCER
	ANCHOR
	ELBOW (90°)
	ELBOW (45°)
	TEE
	CROSS
	PIPING CONNECTIONS
	JOINT OR COUPLING POINT
	UNION
	FLANGED CONNECTION
	CAP
	PLUG OR BLIND FLANGE
	RISER
	ELBOW UP
	ELBOW DOWN
	TEE UP
	TEE DOWN
	HORIZONTAL TEE
	FLEXIBLE CONNECTION
	BALL JOINT
MC	MECHANICAL COUPLING

GENERAL NOTE

THIS IS A STANDARD LEGEND SHEET, THEREFORE, SOME SYMBOLS MAY APPEAR ON THIS SHEET THAT DO NOT APPEAR ON THE DRAWINGS.

MISC. VALVES & COCKS

	SHUT-OFF VALVE
	GLOBE VALVE
S	SHUT-OFF VALVE W/ TAMPER SWITCH
	TRIPLE DUTY VALVE
	CHECK VALVE
	2-WAY CONTROL VALVE
	3-WAY CONTROL VALVE
	BALANCING VALVE
FC	FLOW CONTROL VALVE
SOL	SOLENOID VALVE
	PRESSURE REDUCING VALVE
MAV AAV	AIR VENT (MANUAL/AUTOMATIC)
	RELIEF VALVE
	STRAINER
	STRAINER W/ BLOWDOWN
DV	DRAIN VALVE
HB	HOSE BIBB
WH	WALL HYDRANT
G GH	GROUND HYDRANT
F&T/IB	STEAM TRAP
	PRESSURE GAUGE
	PRESSURE/TEMPERATURE TEST PLUG
	THERMOMETER
F	FLOW SWITCH
T	TEMPERATURE TRANSMITTER
S (SIZE)	SHOCK ARRESTOR
V	VACUUM BREAKER
WFM	WATER FLOW METER
RPBA	REDUCED PRESSURE BACKFLOW ASSEMBLY
DCVA	DOUBLE CHECK VALVE ASSEMBLY
DCDA	DOUBLE CHECK DETECTOR ASSEMBLY
BWV	BACKWATER VALVE
UG	UNDERGROUND GATE VALVE W/BOX
PIV	UNDERGROUND GATE W/POST INDICATOR
	OUTSIDE SCREW & YOKE
	Y PATTERN BOILER BLOWDOWN VALVE
	NON-RETURN STOP VALVE
	QUICK OPENING BOILER BLOWDOWN VALVE

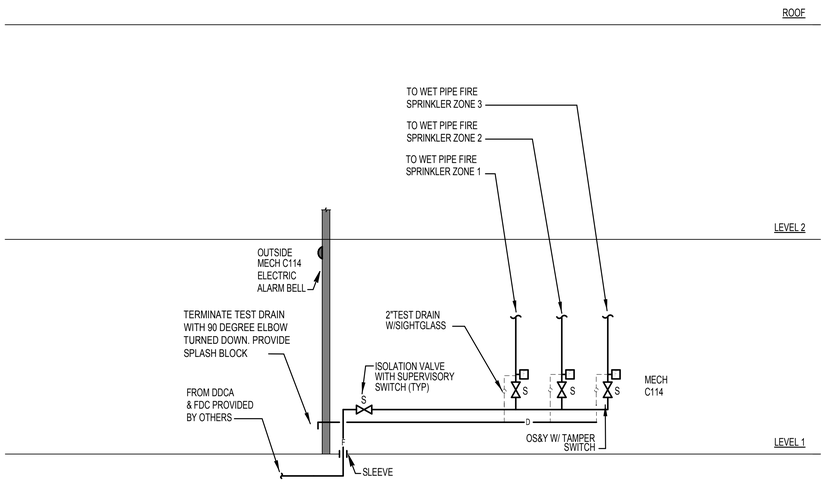

GENERAL NOTES:

1. DIVISION 28 FIRE ALARM TO WIRE SUPERVISORY SWITCHES, FLOW SWITCHES AND TAMPER SWITCHES. REFER TO FIRE ALARM DRAWINGS FOR MORE INFORMATION.

1 FIRE PROTECTION RISER DIAGRAM
NONE

PIVOT ARCHITECTURE

REGISTERED PROFESSIONAL ENGINEER 18329PE OREGON JULY 15, 1986 NICHOLAS P. COLLIGAN
EXPIRES 12-31-17

IBI GROUP

PAE Portland | San Francisco | Seattle pae-engineers.com

BID SET
EUGENE SCHOOL DISTRICT 4J
120 WEST HILLYARD AVENUE, EUGENE, OREGON 97404
RIVER ROAD / EL CAMINO DEL RIO ELEMENTARY SCHOOL

SYMBOLS, LEGENDS, AND ABBREVIATIONS - FIRE PROTECTION

PROJECT #	1337.00	REVISIONS:
ISSUE DATE:	2.12.2016	
DRAWN:	SC	
CHECKED:	PNC	

FP001

PRINTED ON: 2/11/2016 4:11:57 PM FROM FILE: C:\Revit Local Files\13-1533 MEP15\13-1533 MEP15_karol kluczynski.rvt

© 2014 PIVOT ARCHITECTURE

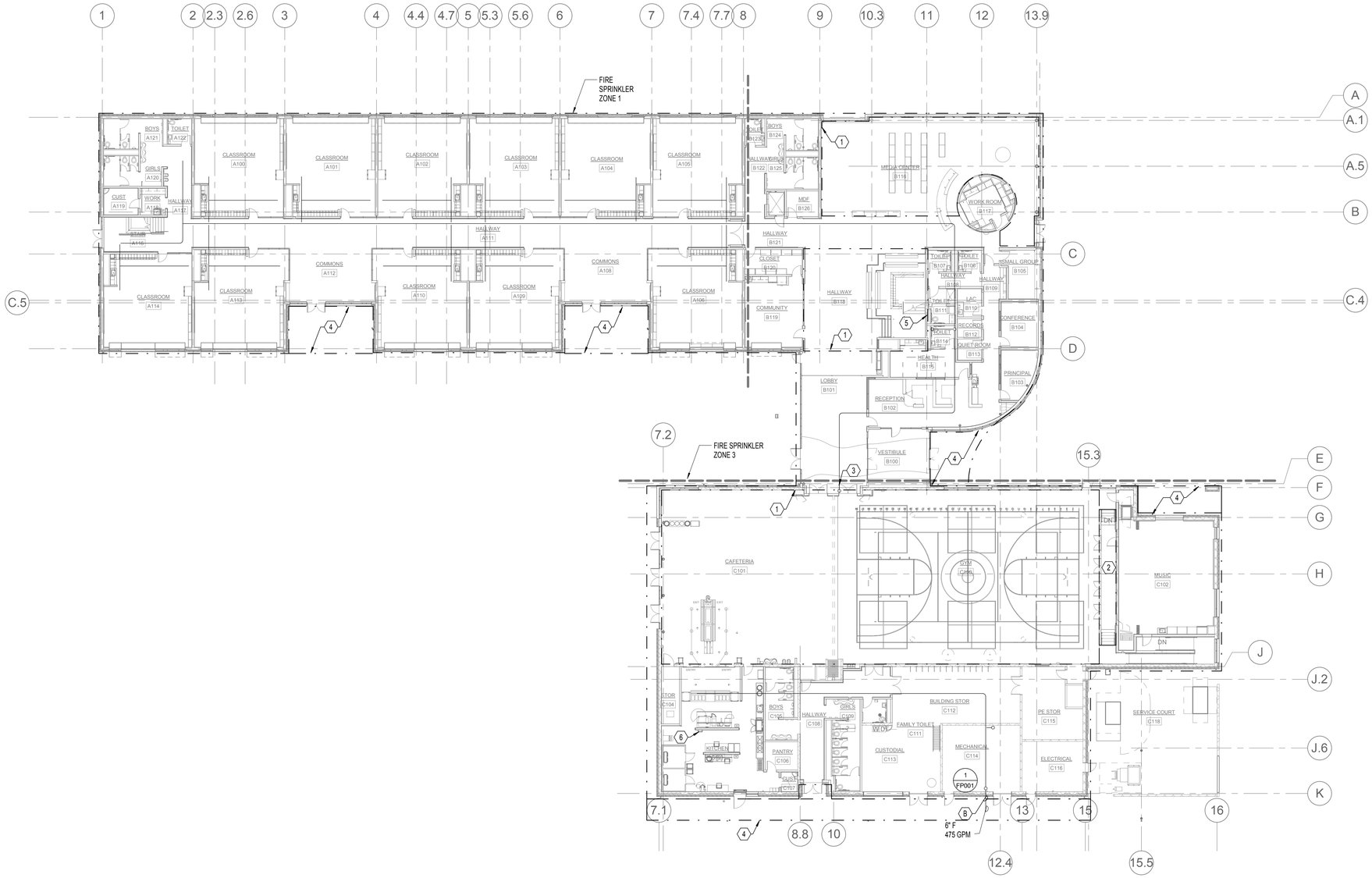

1 FIRST FLOOR - FIRE PROTECTION
1/16" = 1'-0"

NORTH

GENERAL NOTES:

A. IT SHALL BE THE RERESPONSIBLITY OF THIS CONTRACTOR TO COORDINATE THE WORK WITH THAT OF ALL OTHER TRADES, INCLUDING BUT NOT LIMITED TO: ELECTRICAL, FIRE SPRINKLER, HVAC, STRUCTURAL AND GENERAL ARCHITECTURE.

B. IT IS THE INTENTION THAT THE ENTIRE BUILDING WILL BE FULLY SRPINKLERED IN ACCORDANCE WITH NFPA 13 AND LOCAL FIRE CODE.

C. ALL ZONES WITHIN THIS SCOPE ARE CONSIDERED LIGHT HAZARD AREAS. PROVIDE FULL COVERAGE AS REQUIRED.

NOTES:

1. AREA PROTECTED FROM ABOVE

2. PROVIDE FIRE SPRINKLERS UNDER PLATFORM, IN COMPLIANCE WITH NFPA.

3. EXPANSION JOINT/SEISMIC CONNECTORS SHALL BE COORDINATED WITH STRUCTURAL ENGINEER AT ALL PIPING CROSSING EXPANSION JOINTS.

4. PROTECT AREA WITH DRY BULB SIDEWALL HEADS

5. COORDINATE SPINKLER HEAD LOCTIONS WITH OWNER PRIOR TO SUBMITTAL OF SHOP DRAWINGS. HEAD LOCATIONS SHALL NOT BE WITHIN 12' A.F.F. BELOW STAIRS AND RAISED SEATING.

6. PROVIDE 1" FP LINE TO ANSUL SYSTEM. COORDINATE WITH FOOD SERVICE CONSULTANT.

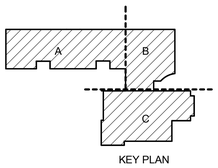

KEY PLAN

PIVOT ARCHITECTURE

REGISTERED PROFESSIONAL ENGINEER 18329PE OREGON JULY 15, 1986 DOUGLAS P. COLLINS
EXPIRES 12-31-17

IBI GROUP

Iowa

PAE
Portland | San Francisco | Seattle
pae-engineers.com

BID SET
EUGENE SCHOOL DISTRICT 4J
120 WEST HILLIEARD AVENUE, EUGENE, OREGON 97404
RIVER ROAD / EL CAMINO DEL RIO ELEMENTARY SCHOOL

OVERALL FIRE PROTECTION PLAN - FIRST FLOOR

PROJECT #	1537.00
ISSUE DATE:	2.12.2016
DRAWN:	SC
CHECKED:	PIC

REVISIONS

FP101

PRINTED ON: 2/11/2016 4:12:04 PM FROM FILE: C:\Revit Local Files\13-1533 MEP15\13-1533 MEP15_karol.kluczynski.rvt

© 2014 PIVOT ARCHITECTURE

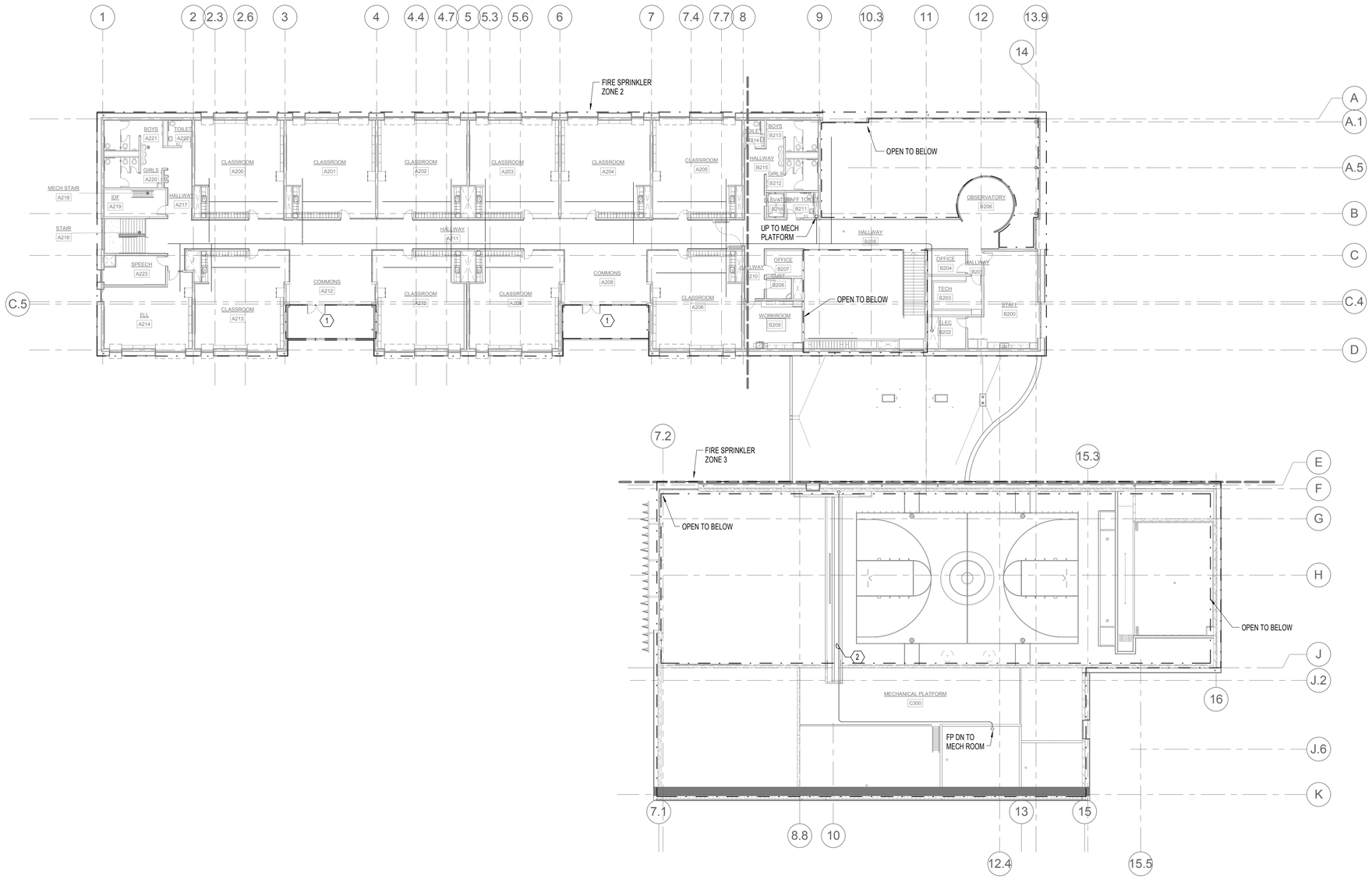

1 SECOND FLOOR - FIRE PROTECTION
1/16" = 1'-0"

GENERAL NOTES:

A. IT SHALL BE THE RERESPONSIBLITY OF THIS CONTRACTOR TO COORDINATE THE WORK WITH THAT OF ALL OTHER TRADES, INCLUDING BUT NOT LIMITED TO: ELECTRICAL, FIRE SPRINKLER, HVAC, STRUCTURAL AND GENERAL ARCHITECTURE.

B. IT IS THE INTENTION THAT THE ENTIRE BUILDING WILL BE FULLY SRPINKLERED IN ACCORDANCE WITH NFPA 13 AND LOCAL FIRE CODE.

C. ALL ZONES WITHIN THIS SCOPE ARE CONSIDERED LIGHT HAZARD AREAS. PROVIDE FULL COVERAGE AS REQUIRED.

D. EXPANSION JOINT/SEISMIC CONNECTORS SHALL BE COORDINATED WITH STRUCTURAL ENGINEER AT ALL PIPING CROSSING EXPANSION JOINTS.

NOTES:

1. PROTECT AREA WITH DRY BULB SIDEWALL HEADS

2. ROUTE MAIN IN CHASE ABOVE FOLDING DOOR.

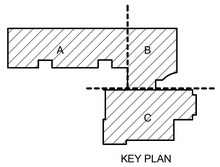

KEY PLAN

PIVOT ARCHITECTURE

REGISTERED PROFESSIONAL ENGINEER 18329PE OREGON JULY 15, 1986 DOUGLAS P. COLLINS
EXPIRES 12-31-17
2-8-2016

IBI GROUP

Iowa

PAE
Portland | San Francisco | Seattle
pae-engineers.com

BID SET

4J
EUGENE SCHOOL DISTRICT 4J
120 WEST HILLEARD AVENUE, EUGENE, OREGON 97404

RIVER ROAD / EL CAMINO DEL RIO ELEMENTARY SCHOOL

OVERALL FIRE PROTECTION PLAN - SECOND FLOOR

PROJECT #	1337.00
ISSUE DATE:	2.12.2016
DRAWN:	SC
CHECKED:	PIC

REVISIONS:

FP102

PRINTED ON: 2/11/2016 4:12:11 PM FROM FILE: C:\Revit Local Files\13-1533 MEP15\13-1533 MEP15_sarol.kluczynski.rvt

© 2014 PIVOT ARCHITECTURE

ABBREVIATIONS

AFF	ABOVE FINISHED FLOOR
A	AMPERE (AMP)
AL	ALUMINUM
ARCH	ARCHITECT / ARCHITECTURAL
ATS	AUTOMATIC TRANSFER SWITCH
CB	CIRCUIT BREAKER
C	CONDUIT
CCTV	CLOSED CIRCUIT TELEVISION
CKT	CIRCUIT
CLG	CEILING
CT	CURRENT TRANSFORMER
CU	COPPER
DN	DOWN
EM	EMERGENCY
EMT	ELECTRIC METALLIC TUBING
EP	EXPLOSION PROOF
EPO	EMERGENCY POWER OFF
EWC	ELECTRIC WATER COOLER
FA	FIRE ALARM
FACP	FIRE ALARM CONTROL PANEL
FLA	FULL LOAD AMPS
FLUOR	FLUORESCENT
FCIC	FURNISHED BY CONTRACTOR INSTALLED BY CONTRACTOR
FOIC	FURNISHED BY OWNER INSTALLED BY CONTRACTOR
FOIO	FURNISHED BY OWNER INSTALLED BY OWNER
FSD	FIRE SMOKE DAMPER
GFP	GROUND FAULT PROTECTION
GFI	GROUND FAULT INTERRUPTER
G	GROUND FAULT CIRCUIT INTERRUPTER
GRC	GALVANIZED RIGID CONDUIT
GRD	GROUND
HP	HORSEPOWER
HPS	HIGH PRESSURE SODIUM
HV	HIGH VOLTAGE
HZ	HERTZ
IG	ISOLATED GROUND
INC	INCANDESCENT
JB	JUNCTION BOX
KW	KILOWATT
KWH	KILOWATT HOUR
KV	KILOVOLT
KVA	KILOVOLT AMP
KVAR	KILOVOLT AMPS REACTIVE
LA	LIGHTNING ARRESTOR
LTG	LIGHTING
LV	LOW VOLTAGE
MATV	MASTER ANTENNA TELEVISION
MCA	MINIMUM CIRCUIT AMPS
MCB	MAIN CIRCUIT BREAKER
MCC	MOTOR CONTROL CENTER
MDP	MAIN DISTRIBUTION PANEL
MECH	MECHANICAL
MH	METAL HALIDE
MLO	MAIN LUGS ONLY
MV	MERCURY VAPOR
MTS	MANUAL TRANSFER SWITCH
NIC	NOT IN CONTRACT
NL	NIGHT LIGHT CIRCUIT
PA	PUBLIC ADDRESS
PE	PHOTO ELECTRIC CELL
PF	POWER FACTOR
PNL	PANELBOARD
PVC	POLYVINYL CHLORIDE CONDUIT
PWR	POWER
SDP	SUB-DISTRIBUTION PANEL
STR	STARTER
SV	SOLENOID VALVE
SW	SWITCH
TD	TIME DELAY
TP	TAMPERPROOF
TTB	TELEPHONE TERMINAL BOARD
TTC	TELEPHONE TERMINAL CABINET
TV	TELEVISION
TYP	TYPICAL
UG	UNDERGROUND
UPS	UNINTERRUPTABLE POWER SUPPLY
V	VOLTAGE
VA	VOLT AMPERES
VP	VAPOR PROOF
W	WATTS
WP	WEATHER PROOF
XFMR	TRANSFORMER
XFSW	TRANSFER SWITCH

EQUIPMENT

- ELECTRICAL EQUIPMENT (GENERIC)
- PANELBOARD: SURFACE, RECESSED
- CABINET: SURFACE, RECESSED
- TRANSFORMER
- GROUND ROD, IN TEST WELL
- GROUND PAD
- DISCONNECT SWITCH
- PLYWOOD BACKBOARD
- ATS SWITCH
- CONDUIT ROUTING WITH PULL BOX

DESIGNATION SYMBOLS

--- / 123	EQUIPMENT DESIGNATOR SEE SCHEDULE.
E / X	EXISTING TO REMAIN, EXISTING TO BE REMOVED
R / F	EXISTING TO BE RELOCATED, FUTURE
N / C	NEW, CONNECT TO
1	NOTE

NOTE

THIS IS A STANDARD LEGEND SHEET, THEREFORE, SOME SYMBOLS MAY APPEAR ON THIS SHEET THAT DO NOT APPEAR ON THE DRAWINGS.

MOUNTING HEIGHTS

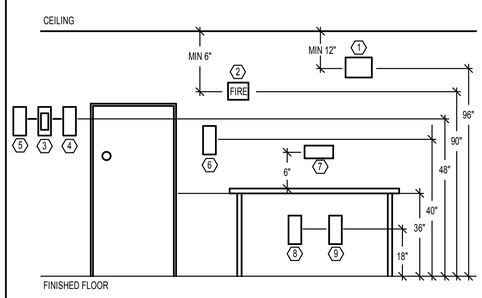

GENERAL NOTES:

A. LOCATE ALL FIRE ALARM DEVICES PER CODE.

B. LOCATE ALL ACCESSIBLE SWITCHES PER ADA GUIDELINES.

C. FIELD COORDINATE ALL ABOVE COUNTER DEVICES WITH MILLWORK CONTRACTOR.

D. IF APPLICABLE, TELCOM CONSULTANTS DRAWINGS TAKE PRECEDENCE OVER THIS DETAIL FOR TELCOM DEVICES.

NOTES:

1. OCCUPANCY SENSOR
2. FIRE ALARM STROBES
3. FIRE ALARM PULL STATION
4. LIGHT SWITCH
5. CARD READER
6. WALL PHONE
7. ABOVE COUNTER RECEPTACLE
8. RECEPTACLE
9. DATA OUTLET

INTERIOR LIGHTING

EMERGENCY	NORMAL	
N / A		UNI-STRUT LIGHTING ASSEMBLY
N / A		TRACK LIGHTING: W/CURRENT LIMITER
		MONOPOINT LUMINAIRE
		DOWNLIGHT: RECESSED SQUARE, ROUND
		DOWNLIGHT:SURFACE SQUARE, ROUND
		WALL WASHER: SURFACE SQUARE, ROUND
		WALL WASHER: RECESSED SQUARE, ROUND
N / A		WALL WASHER: RECESSED LINEAR
		VOLUMETRIC: SURFACE
		VOLUMETRIC: RECESSED
		LINEAR FLUORESCENT LUMINAIRE: STANDARD
		PENDANT LUMINAIRE: SQUARE, ROUND
		PENDANT LUMINAIRE: LINEAR LENGTH TO SCALE
		WALL SCONCE: SURFACE SQUARE, CYLINDER
		WALL MOUNTED LINEAR LUMINAIRE
N / A		UNDERCABINET TASK LIGHT
N / A		STEP LIGHT
		EXIT LIGHT:CEILING, WALL MOUNTED DIRECTIONAL ARROWS AS INDICATED FILLED SIDES ARE ILLUMINATED
L##		FIXTURE IDENTIFICATION, SEE LUMINAIRE SCHEDULE

LIGHTING SWITCHES & CONTROLS

$a	LOWER-CASE LETTER NEAR SWITCH DENOTES CIRCUIT CONTROLLED (TYP)
$ / $2	WALL SWITCH: 1 POLE, 2 POLE
$3 / $4	WALL SWITCH: 3 WAY, 4 WAY
$K / $U	WALL SWITCH: KEY LOCK, MOMENTARY
$LV / $P	WALL SWITCH: LOW VOLTAGE, PILOT
$T / $D	WALL SWITCH: OCC. SENSOR, DIMMER
CS #	WALL CONTROL STATION, # INDICATES STATION ID
PE / PE	PHOTOELECTRIC CELL: WALL MOUNTED, CEILING MOUNTED
OS / OS X / X	OCCUPANCY SENSOR: WALL MOUNTED, CEILING MOUNTED "X" DESIGNATES DEVICE TYPE: S: IN COMBINATION WITH WALL SWITCH U: ULTRASONIC DT: DUAL TECHNOLOGY, ULTRASONIC/INFRARED
PP	(POWER PACK) AUXILIARY RELAY DEVICE
D	LED DRIVER

SITE & LANDSCAPE LIGHTING

EMERGENCY	NORMAL	
		POLE LUMINAIRE: SINGLE-MULTIPLE HEADS, MAY VARY AS SHOWN
		POLE LUMINAIRE: PEDESTRIAN SCALE
		BOLLARD: SQUARE, ROUND
N / A		IN-GRADE MARKER
N / A		INGRADE ACCENT
S##		FIXTURE IDENTIFICATION, SEE LUMINAIRE SCHEDULE

SIGNAL

FIRE ALARM

- SPRINKLER SYSTEM SWITCH: FLOW, TAMPER
- MANUAL FIRE ALARM STATION
- DETECTOR: SMOKE
- DETECTOR: BEAM
- DUCT DETECTOR, TYPE AS NOTED
- FIRE ALARM: VISUAL
- FIRE ALARM: HORN; HORN W/VISUAL
- FIREMANS PHONE JACK
- MAGNETIC DOOR HOLDER, CLOSER
- FIRE ALARM SPEAKER STROBE: WALL, CEILING

ONE-LINE

- CIRCUIT BREAKER
- SWITCH, FUSED SWITCH
- BUSS
- AUTOMATIC SWITCH
- METER
- PANEL
- FEEDER CALLOUT
- FAULT CURRENT CALLOUT
- GENERATOR

EWEB UTILITY CONTACT

DEBBIE JENKINS

4200 ROOSEVELT BLVD.
EUGENE, OR 97402

OFFICE/FAX: 541-685-7117

EMAIL: DEBBIE.JENKINS@EWEB.ORG

POWER

- WALL RECEPTACLE: SINGLE, DUPLEX
- WALL RECEPTACLE: EMERGENCY, QUADPLEX
- WALL RECEPTACLE: ISOLATED GROUND
- CEILING RECEPTACLE: DUPLEX, QUADPLEX
- FIRE RATED FLOOR POKE-THRU
- DENOTES RECEPTACLE ABOVE COUNTER
- SPECIAL PURPOSE OUTLET AS NOTED, EMERGENCY
- FLUSH IN-FLOOR OUTLET: DUPLEX, QUAD
- SURFACE OUTLET STRIP: DIMENSION AS SHOWN
- JUNCTION BOX
- MOTOR STARTER: MANUAL, MAGNETIC, COMBINATION
- MOTOR CONNECTION
- CONTACTOR, RELAY, SOLENOID
- PUSH BUTTON STATION
- WIRING CONCEALED IN CEILING OR WALL
- WIRING CONCEALED IN FLOOR OR UNDERGROUND
- INDICATES INSULATED GREEN GROUND WIRE
- HOME RUN DESTINATION SHOWN
- CONDUIT ELL: UP, DN.

ELECTRICAL EQUIPMENT DESIGNATION

21LSC1

VOLTAGE:
BLANK - 208V/120V
2 - 208Y/120V
4 - 480Y/277V

BUILDING LEVEL:
1 - FIRST LEVEL
2 - SECOND LEVEL
L - LOFT

POWER TYPE:
BLANK - NORMAL
SB - STANDBY
LS - LIFE SAFTEY

BUILDING SECTOR:
A - A SECTOR
B - B SECTOR
C - C SECTOR
D - D SECTOR

IDENTIFIER:
1 - FIRST IN SERIES OF EQUIPMENT
2 - SECOND IN SERIES OF EQUIPMENT
ETC.

PIVOT ARCHITECTURE

REGISTERED PROFESSIONAL ENGINEER 11612 OREGON JULY 16, 1987 STEPHEN J. TURNIA
EXPIRES 6-30-16

IBI GROUP

Nova

PAE
Portland | San Francisco | Seattle
pae-engineers.com

BID SET

EUGENE SCHOOL DISTRICT 4-J
120 WEST HILLEARD AVENUE, EUGENE, OREGON 97404

RIVER ROAD / EL CAMINO DEL RIO ELEMENTARY SCHOOL

SYMBOLS, LEGENDS, AND ABBREVIATIONS - ELECTRICAL

PROJECT #:	1337.00
ISSUE DATE:	2.12.2016
DRAWN:	SC
CHECKED:	PIC

REVISIONS

E001

PRINTED ON: 2/11/2016 4:09:15 PM FROM FILE: C:\Revit Local Files\13-1533 MEP15\13-1533 MEP15_kanol.kluczynski.rvt

© 2014 PIVOT ARCHITECTURE

Tag	Description	Size	Watts	Lamp(s)	Ballast/Driver	Voltage	Product	Mounting	Finish	Notes
L1A	SUSPENDED LED LINEAR DIRECT/INDIRECT	NOMINAL 8 INCH WIDE X 2 INCH DEEP X AS SHOWN ON DRAWINGS	41W/4FT	LED, 3500K 4500 DELIVERED LUMENS PER FOUR FOOT SECTION	0-10 DIMMING ELECTRONIC	UNIVERSAL VOLTAGE	PEERLESS STAPLE SERIES, LEDALITE , AX1S, COOPER OR APPROVED	SUSPENDED AIRCRAFT CABLE	STANDARD AS SELECTED BY ARCHITECT	NOMINAL DISTRIBUTION IS TO BE 60% INDIRECT 40 % DIRECT. WITH DUST COVER
L1B	SUSPENDED LED LINEAR DIRECT/INDIRECT	NOMINAL 8 INCH WIDE X 2 INCH DEEP X AS SHOWN ON DRAWINGS	41W/4FT	LED, 3500K 4500 DELIVERED LUMENS PER FOUR FOOT SECTION	0-10 DIMMING ELECTRONIC	UNIVERSAL VOLTAGE	PEERLESS STAPLE SERIES, LEDALITE , AX1S, COOPER OR APPROVED	SUSPENDED AIRCRAFT CABLE	STANDARD AS SELECTED BY ARCHITECT	NOMINAL DISTRIBUTION IS TO BE 40% INDIRECT 60% DIRECT. WITH DUST COVER
L2A	RECESSED LENSED LED	4 INCH X 4 INCH X 4 FEET LONG	32W/4FT	LED 3500 K 3000 LUMENS PER FOUR FOOT SECTION	0-10 DIMMING ELECTRONIC	UNIVERSAL VOLTAGE	AX1S BEAM SERIES, NULITE, NEO RAY OR APPROVED	CEILING RECESSED	STANDARD AS SELECTED BY ARCHITECT	ACP CEILING FLUSHED MOUNT INSTALLATION
L2B	SAME AS TYPE L2A EXCEPT WALL MOUNT - FLANGELESS	4 INCH X 4 INCH X 4 FEET LONG	32W/4FT	LED 3500 K 3000 LUMENS PER FOUR FOOT SECTION	0-10 DIMMING ELECTRONIC	UNIVERSAL VOLTAGE	AX1S BEAM SERIES, NULITE, NEO RAY OR APPROVED	WALL SURFACE (11' AFF)	STANDARD AS SELECTED BY ARCHITECT	SURFACE WALL MOUNT INSTALLATION
L2C	SAME AS TYPE L2A EXCEPT WALL WASH MOUNT - FLANGELESS	4 INCH X 4 INCH X 4 FEET LONG	32W/4FT	LED 3500 K 3000 LUMENS PER FOUR FOOT SECTION	0-10 DIMMING ELECTRONIC	UNIVERSAL VOLTAGE	AX1S BEAM SERIES, NULITE, NEO RAY OR APPROVED	CEILING RECESSED	STANDARD AS SELECTED BY ARCHITECT	FLANGELESS CEILING FLUSHED MOUNT INSTALLATION
L2D	SAME AS TYPE L2A EXCEPT 2" WIDE	4 INCH X 2 INCH X 4 FEET LONG	30W/4FT	LED 3500 K 3000 LUMENS PER FOUR FOOT SECTION	0-10 DIMMING ELECTRONIC	UNIVERSAL VOLTAGE	AX1S BEAM SERIES, NULITE, NEO RAY OR APPROVED	CEILING RECESSED	STANDARD AS SELECTED BY ARCHITECT	FLANGELESS WOOD LATH CEILING FLUSHED MOUNT INSTALLATION
L2E	SAME AS TYPE L2A	4 INCH X 4 INCH X 4 FEET LONG	32W/4FT	LED 3500 K 3000 LUMENS PER FOUR FOOT SECTION	0-10 DIMMING ELECTRONIC	UNIVERSAL VOLTAGE	AX1S BEAM SERIES, NULITE, NEO RAY OR APPROVED	CEILING RECESSED	STANDARD AS SELECTED BY ARCHITECT	GYP CEILING FLUSHED MOUNT INSTALLATION
L2F	SAME AS TYPE L2A EXCEPT VERTICAL WALL WASH MOUNT - FLANGELESS	4 INCH X 4 INCH X 4 FEET LONG	32W/4FT	LED 3500 K 3000 LUMENS PER FOUR FOOT SECTION	0-10 DIMMING ELECTRONIC	UNIVERSAL VOLTAGE	AX1S BEAM SERIES, NULITE, NEO RAY OR APPROVED	WALL RECESSED	STANDARD AS SELECTED BY ARCHITECT	FLANGELESS VERTICAL WALL MOUNT INSTALLATION
L3	NOT USED									
L4A	RECESSED LED 2X2	2X2 FEET SQUARE	37	LED, 3500 K 3700 LUMENS	0-10 DIMMING ELECTRONIC	UNIVERSAL VOLTAGE	LITHONIA 2ALL SERIES, CORELITE ENCOUNTER SERIES LEDALITE PURE FX SERIES, AX1S DAYBRITE	CEILING RECESSED	STANDARD AS SELECTED BY ARCHITECT	
L4B	RECESSED LED 2X2 FOOD SERVICE RATED	2X2 FEET SQUARE	45	LED, 3500K 4400 LUMENS	0-10 DIMMING ELECTRONIC	UNIVERSAL VOLTAGE	KURTZON FP SERIES PARAMOUNT APPROVED PENDING VERIFICATION OF SPEC COMPLIANCE	CEILING RECESSED	STANDARD AS SELECTED BY ARCHITECT	FOOD SERVICE RATED. GYP CEILING INSTALLATION
L4C	RECESSED LED 2X2 FOOD SERVICE RATED	2X2 FEET SQUARE	45	LED, 3500K 4400 LUMENS	0-10 DIMMING ELECTRONIC	UNIVERSAL VOLTAGE	KURTZON FP SERIES PARAMOUNT APPROVED PENDING VERIFICATION OF SPEC COMPLIANCE	CEILING RECESSED	STANDARD AS SELECTED BY ARCHITECT	FOOD SERVICE RATED. ACP CEILING INSTALLATION
L5A	RECESSED LED DOWNLIGHT	6 INCH ROUND APERTURE	28	LED, 3500K, 1800 LUMENS	0-10 DIMMING ELECTRONIC	UNIVERSAL VOLTAGE	GOTHAM EVO SERIES PORTFOLIO LD6A SERIES, INDY, LIGHTOLIER CALCULYTE	CEILING RECESSED	CLEAR ALZAK REFLECTOR	GYP CEILING FLUSHED MOUNT INSTALLATION
L5B	RECESSED LED DOWNLIGHT	6 INCH ROUND APERTURE	28	LED, 3500K, 1800 LUMENS	0-10 DIMMING ELECTRONIC	UNIVERSAL VOLTAGE	GOTHAM EVO SERIES PORTFOLIO LD6A SERIES, INDY, LIGHTOLIER CALCULYTE	CEILING RECESSED	CLEAR ALZAK REFLECTOR	ACP CEILING FLUSHED MOUNT INSTALLATION
L5C	RECESSED LED DOWNLIGHT	6 INCH ROUND APERTURE	28	LED, 3500K, 1800 LUMENS	0-10 DIMMING ELECTRONIC	UNIVERSAL VOLTAGE	GOTHAM EVO SERIES PORTFOLIO LD6A SERIES, INDY, LIGHTOLIER CALCULYTE	CEILING RECESSED	CLEAR ALZAK REFLECTOR	WOOD LATH CEILING FLUSHED MOUNT INSTALLATION - WET LISTED.
L6A	SURFACE MOUNTED LINEAR LED	NOMINAL 8 INCH WIDE X FOUR FEET LONG	40	LED, 3500K ,4000 LUMENS	0-10 DIMMING ELECTRONIC	UNIVERSAL VOLTAGE	LITHONIA STL SERIES, OR PRE-BID APPROVED	SURFACE CEILING	STANDARD AS SELECTED BY ARCHITECT	GYP CEILING FLUSHED MOUNT INSTALLATION
L6B	SURFACE MOUNTED LINEAR LED	NOMINAL 8 INCH WIDE X FOUR FEET LONG	40	LED, 3500K ,4000 LUMENS	0-10 DIMMING ELECTRONIC	UNIVERSAL VOLTAGE	LITHONIA STL SERIES, OR PRE-BID APPROVED	SURFACE CEILING	STANDARD AS SELECTED BY ARCHITECT	ACP CEILING FLUSHED MOUNT INSTALLATION

Tag	Description	Size	Watts	Lamp(s)	Ballast/Driver	Voltage	Product	Mounting	Finish	Notes
L7A	SURFACE OR SUSPENDED LED LENSED STRIP	NOMINAL 3 INCH WIDE X 4 FEET LONG	32	LED 3500K 2000 LUMENS	0-10 DIMMING ELECTRONIC	UNIVERSAL VOLTAGE	LITHONIA ZL2N SERIES, METALLUX SNLED SERIES WILLIAMS DAYBRITE LF SERIES OR PREBID APPROVED	SURFACE CEILING, OR CHAIN HUNG	STANDARD AS SELECTED BY ARCHITECT	GYP CEILING FLUSHED MOUNT INSTALLATION
L7B	SURFACE OR SUSPENDED LED LENSED STRIP	NOMINAL 3 INCH WIDE X 4 FEET LONG	32	LED 3500K 2000 LUMENS	0-10 DIMMING ELECTRONIC	UNIVERSAL VOLTAGE	LITHONIA ZL2N SERIES, METALLUX SNLED SERIES WILLIAMS DAYBRITE LF SERIES OR PREBID APPROVED	SURFACE CEILING, OR CHAIN HUNG	STANDARD AS SELECTED BY ARCHITECT	ACP CEILING FLUSHED MOUNT INSTALLATION
L8A	LED HIGHBAY DIRECT/INDIRECT	19 INCH HIGH X 22 INCH DIAMETER	250	80 CRI 4000K 27000 LUMENS WIDE DISTRIBUTION	INTEGRAL 0-10 DIMMING ELECTRONIC WITH DIMMING TEMINAL AT EACH LUMINAIRE	UNIVERSAL VOLTAGE	HOLOPHANE PHUZION SERIES	SUSPENDED WITH SWIVEL MOUNT PENDANT AND HOOK AND CORD TO LUMINAIRE	STANDARD AS SELECTED BY ARCHITECT	PROVIDE WIRE GUARD FROSTED LENS. PROVIDE STEM LENGTH AS NECESSARY TO MOUNT LUMINAIRE AT 25' AFF.
L9	NOT USED									
L10A	LED CYLINDER - SURFACE MOUNTED	6.1 INCH HIGH X 6 INCH DIAMETER	39.1	LED 3500K, 4000 LUMEN 41 DEGREE	0-10 DIMMING ELECTRONIC	UNIVERSAL VOLTAGE	V2 LIGHTING CORE SERIES, PORTFOLIO.	SURFACE CEILING	STANDARD AS SELECTED BY ARCHITECT	ACP CEILING MOUNT INSTALLATION
L10B	LED CYLINDER - PENDANT	15.4 INCH HIGH X 6 INCH DIAMETER	46.8	LED 3500K, 5000 LUMEN 41 DEGREE	0-10 DIMMING ELECTRONIC	UNIVERSAL VOLTAGE	V2 LIGHTING CORE SERIES, PORTFOLIO.	SUSPENDED AIRCRAFT CABLE	STANDARD AS SELECTED BY ARCHITECT	PROVIDE STEM LENGTH AS NECESSARY TO MOUNT LUMINAIRES AT 25' AFF.
L11	LED STEP LIGHT	5 1/4 X 2 7/8 X 4	1.1	LED 4000K, 36 LUMEN	ELELCTRONIC NON DIM	120 V	BEGA 1325 LED, VVE-EF OR PRE BID APPROVED	RECESSED WALL	STANDARD AS SELECTED BY ARCHITECT	
L12	NOT USED									
L13	LINEAR WET LOCATION LED	NOMINAL 8 INCH WIDE X 4 FEET LONG	39 WATT	LED 2975 LUMEN 4100 K	ELECTRONIC	277V	LITHONIA VAP SERIES, BEGHELLI OR PRE BID APPROVED	CEILING MOUNT OR SUSPENDED	STANDARD AS SELECTED BY ARCHITECT	
X	UNIVERSAL LED EXIT SIGN	13-7/8 X 8.5	3 WATT	GREEN LED	ELECTRONIC	277V	LITHONIA EXTREME SERIES, UNIVERSAL MOUNT		STANDARD AS SELECTED BY ARCHITECT	WHITE WITH GREEN LETTERS UNIVERSAL MOUNT, UNIVERSAL FIELD ADJUSTABLE DIRECTIONAL ARROWS
XI	WEATHERPROOF EXIT SIGN	13-7/8 X 8.5	3 WATT	GREEN LED	ELECTRONIC	277V	LITHONIA EXTREME SERIES, UNIVERSAL MOUNT		STANDARD AS SELECTED BY ARCHITECT	WEATHERPROOF ENCLOSURE WHITE WITH GREEN LETTERS UNIVERSAL MOUNT, UNIVERSAL FIELD ADJUSTABLE DIRECTIONAL ARROWS
SI A	SITE AREA LED POLE LIGHT	20 INCH DIAMETER	135	LED 4000K 14000 LUMEN	DUAL DRIVER FOR LIGHT REDUCTION	UNIVERSAL VOLTAGE	LITHONIA OMERO SERIES TYPE III DISTRIBUTION, OR PRE BID APPROVED		STANDARD AS SELECTED BY ARCHITECT	18 FOOT POLE ON FLUSH BASE SEE DETAIL. PROVIDE DUAL-CHANNEL SEPARATION FOR LINE VOLTAGE AND COMMUNICATIONS CABLE. PROVIDE ACCESS HOLE FOR FUTURE CAMERA.
SI B	SITE AREA LED POLE LIGHT	20 INCH DIAMETER	135	LED 4000K 14000 LUMEN	DUAL DRIVER FOR LIGHT REDUCTION	UNIVERSAL VOLTAGE	LITHONIA OMERO SERIES TYPE IV DISTRIBUTION, OR PRE BID APPROVED		STANDARD AS SELECTED BY ARCHITECT	18 FOOT POLE ON FLUSH BASE SEE DETAIL. PROVIDE DUAL-CHANNEL SEPARATION FOR LINE VOLTAGE AND COMMUNICATIONS CABLE. PROVIDE ACCESS HOLE FOR FUTURE CAMERA.
SI C	SITE AREA LED POLE LIGHT	20 INCH DIAMETER	135	LED 4000K 14000 LUMEN	DUAL DRIVER FOR LIGHT REDUCTION	UNIVERSAL VOLTAGE	LITHONIA OMERO SERIES TYPE V DISTRIBUTION, OR PRE BID APPROVED		STANDARD AS SELECTED BY ARCHITECT	18 FOOT POLE ON FLUSH BASE SEE DETAIL. PROVIDE DUAL-CHANNEL SEPARATION FOR LINE VOLTAGE AND COMMUNICATIONS CABLE. PROVIDE ACCESS HOLE FOR FUTURE CAMERA.
S2	SITE AREA LED POLE LIGHT	20 INCH DIAMETER	135	LED 4000K 14000 LUMEN	DUAL DRIVER FOR LIGHT REDUCTION	UNIVERSAL VOLTAGE	LITHONIA OMERO SERIES TYPE IV DISTRIBUTION, OR PRE BID APPROVED		STANDARD AS SELECTED BY ARCHITECT	12 FOOT POLE ON FLUSH BASE SEE DETAIL. PROVIDE DUAL-CHANNEL SEPARATION FOR LINE VOLTAGE AND COMMUNICATIONS CABLE. PROVIDE ACCESS HOLE FOR FUTURE CAMERA.
S3A	SITE LED LIGHT COLUMN	6.5 INCH WIDE X 4 FEET TALL	19.6	LED 416 LUMEN 4000K	ELECTRONIC	277V	BEGA 8619 SERIES, OR PRE BID APPROVED		STANDARD AS SELECTED BY ARCHITECT	FLUSH BASE
S4	WALL MOUNTED LED BUILDING MOUNTED	16 INCH WIDE X 8 INCH HIGH	24	2000 LUMEN TYPE III 4000 K	ELECTRONIC	277V	LITHONIA WST, GARDCO OR PRE BID APPROVED		STANDARD AS SELECTED BY ARCHITECT	

GENERAL NOTES:

A. CONTRACTOR TO COORDINATE LUMINAIRES WITH CEILING TYPE PRIOR TO PURCHASE.

PIVOT ARCHITECTURE

REGISTERED PROFESSIONAL ARCHITECT 11612 OREGON JULY 16, 1985 STEPHEN J. TURINA 02.09.16 EXPIRES 6-30-16

IBI GROUP

PAE Portland | San Francisco | Seattle pae-engineers.com

BID SET

4J EUGENE SCHOOL DISTRICT 4J
120 WEST HILLYARD AVENUE, EUGENE, OREGON 97404

RIVER ROAD / EL CAMINO DEL RIO ELEMENTARY SCHOOL

LUMINAIRE SCHEDULE

PROJECT #	1337.00
ISSUE DATE:	2.12.2016
DRAWN:	SC
CHECKED:	PKC

REVISIONS

E002

PRINTED ON: 2/11/2016 4:16:56 PM FROM FILE: C:\Revit Local Files\13-1533 MEP15\13-1533 MEP15_karol kluczynski.rvt

© 2014 PIVOT ARCHITECTURE

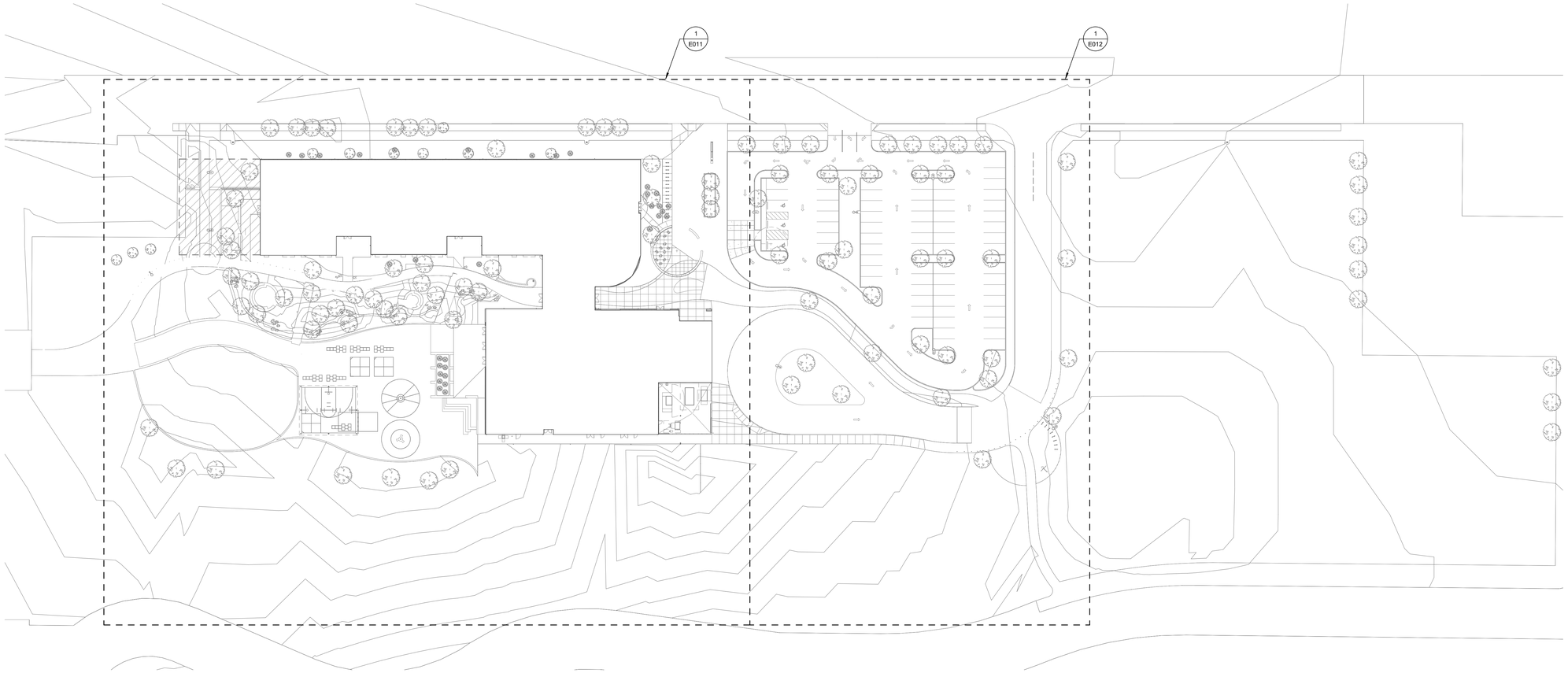

1 OVERALL SITE PLAN - ELECTRICAL
1" = 40'-0"

NORTH

PIVOT ARCHITECTURE

REGISTERED PROFESSIONAL ENGINEER
11612
OREGON
JULY 15, 1980
STEPHEN J. TURNAK
2.09.16
EXPIRES 6-30-16

IBI GROUP

PAE
Portland | San Francisco | Seattle
pae-engineers.com

BID SET
EUGENE SCHOOL DISTRICT 4J
120 WEST HILLEARD AVENUE, EUGENE, OREGON 97404
RIVER ROAD / EL CAMINO DEL RIO ELEMENTARY SCHOOL

OVERALL SITE PLAN - ELECTRICAL

PROJECT #	1337.00
ISSUE DATE	2.12.2016
DRAWN	SC
CHECKED	PIC

REVISIONS

E010

PRINTED ON: 2/11/2016 4:09:23 PM FROM FILE: C:\Revit Local Files\13-1533 MEP15\13-1533 MEP15_karol.kluczynski.rvt

© 2014 PIVOT ARCHITECTURE

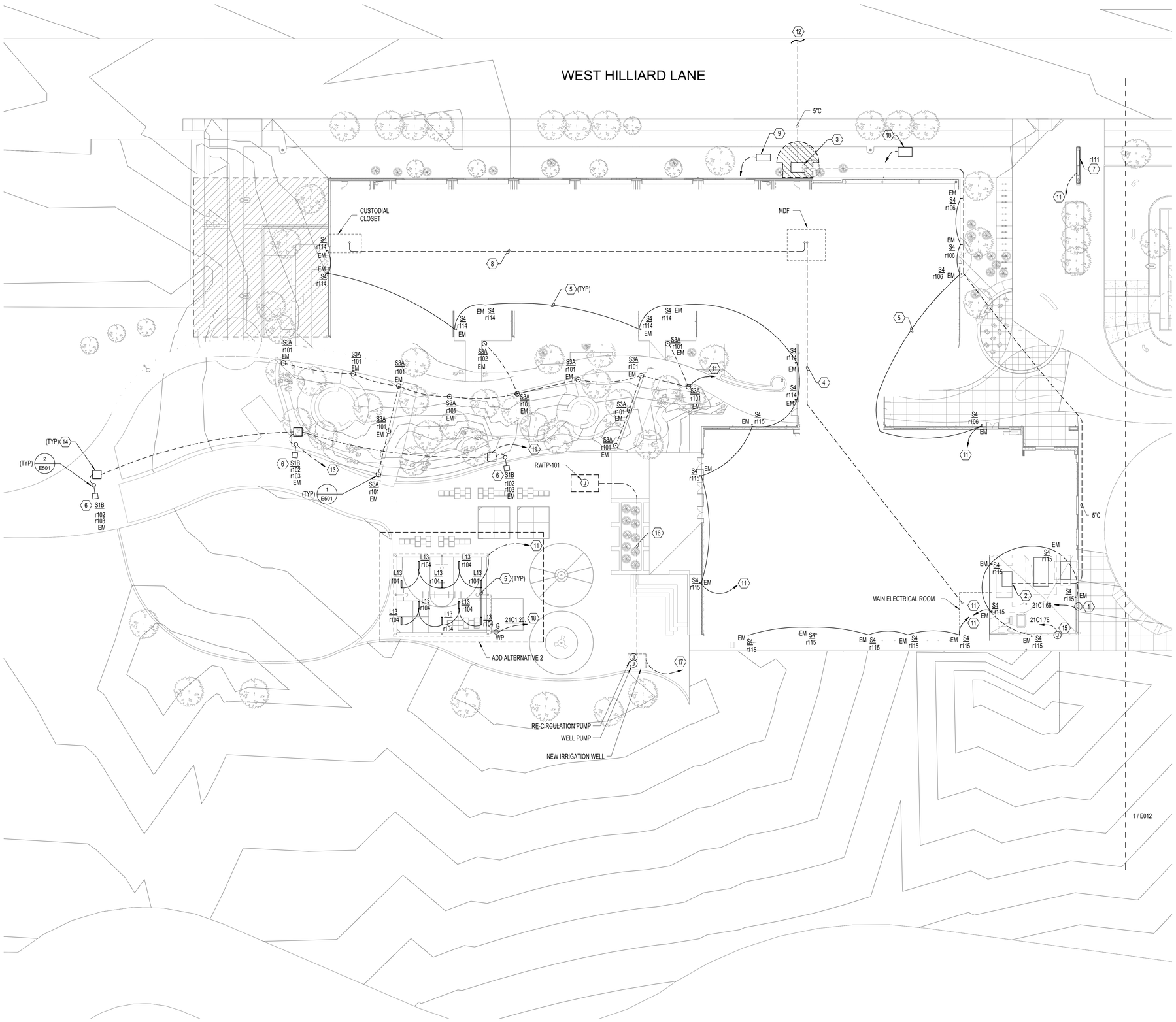

1 ENLARGED SITE PLAN WEST - ELECTRICAL
1" = 20'-0"

GENERAL NOTES:

A. ELECTRICAL WORK SHOWN IS DIAGRAMMATIC AND IS MEANT TO REPRESENT GENERAL ROUTING AND EQUIPMENT LOCATIONS. NOT EVERY BEND, OFFSET, PULLBOX, ETC, IS SHOWN. CONTRACTOR SHALL PROVIDE ALL WORK REQUIRED FOR A COMPLETE INSTALLATION.

B. COORDINATE ALL UNDERGROUND SITE WORK WITH EXISTING AND NEW UTILITIES.

C. ALL BRANCH CIRCUITING AT BUILDING EXTERIOR AND SITE SHALL BE #10AWG MINIMUM, UNLESS OTHERWISE NOTED.

D. PROVIDE SEPARATE NEUTRAL CONDUCTOR FOR EACH BRANCH CIRCUIT.

E. REFER TO LIGHTING RELAY SCHEDULE ON SHEET E702 FOR ADDITIONAL INFORMATION.

F. PROVIDE NO MORE THAN (6) CURRENT CARRYING CONDUCTORS (INCLUDING NEUTRAL) PER HOMERUN.

G. COORDINATE INSTALLATION OF NEW ELECTRICAL SERVICE WITH EWEB.

H. REFER TO '4J LIGHTING CONTROL INTERFACE' DETAIL ON SHEET E501 FOR SITE CONTROL INFORMATION.

I. REFER TO TELECOMMUNICATION AND ARCHITECTURAL DRAWINGS FOR SITE CARD READER LOCATIONS AND REQUIREMENTS.

J. ALL UNDERGROUND AND EXPOSED CONDUIT SHALL BE MINIMUM 3/4" C.

K. REFER TO A/V DRAWINGS FOR LOW VOLTAGE CONDUIT RUNS AND ADDITIONAL REQUIREMENTS.

NOTES:

1. PROVIDE CONNECTION TO MOTORIZED GATE. COORDINATE CONTROL AND ADDITIONAL REQUIREMENTS WITH VENDOR.

2. TRANSFORMER VAULT. UTILITY VAULT CO MODEL "EC5-2.2302" REFERENCE EWEB DESIGN STANDARD MANUAL FOR ADDITIONAL INFORMATION.

3. PROVIDE EWEB VAULT SE-3 FLUSH WITH GRADE, WITH CABINET LID MOUNTED ABOVE GRADE. SE-3 SHALL HAVE 10' FRONT AND 3' SIDE CLEARANCE AS SHOWN.

4. PROVIDE (1) 2" CONDUIT WITH PULL STRING FOR FUTURE EXPANSION (ELECTRICAL POWER) FROM ELECTRICAL ROOM C116 TO MDF B126. CAP CONDUIT AND PROVIDE LABEL STATING "FOR FUTURE EXPANSION ONLY".

5. NOTE NOT USED.

6. PROVIDE (2) RELAYS PER POLE FOR LIGHT CONTROL BASED ON TIME CLOCK INPUT.

7. PROVIDE CONNECTION TO MONUMENT SIGN. PROVIDE IN ADDITION AN UNSWITCHED CIRCUIT AS REQUIRED FOR SCREENBOARD READER VIA PANEL 21C1:42 IN SAME HOMERUN AS MONUMENT SIGN WITH (2) #10 CU & (1) #10 CU GRD. PROVIDE (1) 1"C FOR AV WIRING. VERIFY WITH A/V DRAWINGS FOR ADDITIONAL CONTROL REQUIREMENTS.

8. PROVIDE 2" CONDUIT WITH PULL STRING FOR FUTURE EXPANSION (ELECTRICAL POWER) FROM MDF B126 TO CUSTODIAN A119. CAP CONDUIT AND PROVIDE LABEL STATING "FOR FUTURE EXPANSION ONLY".

9. PROVIDE ELECTRICAL CONNECTION (2 #4 AWG CU, AND 1 #4 AWG CU GRD IN 1" CONDUIT) TO EACH OF THE (2) 1500 WATT HEATER IN RF BFP VAULT. CIRCUIT TO PANEL 21B1:43,45. IN ADDITIONAL PROVIDE (1) 3/4"C FOR CONTROL WIRINGS.

10. PROVIDE ELECTRICAL CONNECTION (2 #4 AWG CU, AND 1 # 4 AWG CU GRD IN 1" CONDUIT) TO 1/2 HP PUMP IN DCD BFP VAULT. CIRCUIT TO PANEL 21B1:47. IN ADDITIONAL PROVIDE (1) 3/4"C FOR CONTROL WIRINGS FROM VAULT TO MECHANICAL ROOM C119.

11. CIRCUIT TO LCP-1C LOCATED IN MAIN ELECTRICAL ROOM C116. REFER TO RELAY SCHEDULE ON SHEET E702 FOR CIRCUITING INFORMATION.

12. PROVIDE (1) 5"C ACROSS WEST HILLIARD LANE FROM EWEB NEW VAULT SE-3 TO EWEB SERVICE POLE #572 (APPROXIMATELY 75' AWAY). PROVIDE (1) 5"C RISER, 10 FEET UP EWEB POLE WITH MOUNTING BRACKETS PER EWEB STANDARDS. VERIFY WITH EWEB AND EWEB DESIGN DRAWINGS PRIOR TO INSTALLATION.

13. PROVIDE 2 #10 AWG CU, AND 1 #10 AWG CU GRD IN 3/4" CONDUIT TO IDF ROOM. OWNER TO FURNISH NETWORK SWITCH. CIRCUIT FROM PANEL IDF2:17. REFER TO TECHNOLOGY DRAWING FOR ADDITIONAL INFORMATION ON SIGNAL PROVISION.

14. PROVIDE OLDCASTLE CHRISTY N09 PULLBOX LOCKABLE, WITH BARRIER (OR APPROVED EQUAL) NEAR EACH POLE LIGHT BASE.

15. PROVIDE CONNECTION TO DOOR ACCESS EQUIPMENT. COORDINATE EXACT LOCATION AND ADDTIONAL CONTROL REQUIREMENT WITH A/V CONSULTANT PRIOR TO INSTALLATION.

16. PROVIDE (2) RACEWAYS (1) 1"C FOR CONTROL AND (1) 3/4"C FOR POWER FEEDER. REFER TO M/E COORDINATION SCHEDULE FOR FEEDER INFORMATION.

17. REFER TO M/E COORDINATION SCHEDULE ON SHEET E701 FOR EQUIPMENT FEEDER AND ADDITIONAL REQUIREMENTS. HOMERUNS BACK TO MECHANCIAL ROOM C114.

18. PROVIDE 2#10 CU, 1 #10 CU GRD IN 1/2" CONDUIT BACK TO ELECTRICAL ROOM C116.

PIVOT ARCHITECTURE

REGISTERED PROFESSIONAL ENGINEER 11612 OREGON JULY 15, 1980 STEPHEN J. TURNA 02.09.16 EXPIRES: 6-30-16

IBI GROUP

lowa

PAE Portland | San Francisco | Seattle pae-engineers.com

BID SET

4J EUGENE SCHOOL DISTRICT 4-J
120 WEST HILLIEARD AVENUE, EUGENE, OREGON 97404

RIVER ROAD / EL CAMINO DEL RIO ELEMENTARY SCHOOL

ENLARGED SITE PLAN WEST - ELECTRICAL

PROJECT #:	1537.00
ISSUE DATE:	2.12.2016
DRAWN:	SC
CHECKED:	PIC

REVISIONS:

E011

PRINTED ON: 2/11/2016 4:09:32 PM FROM FILE: C:\Revit Local Files\13-1533 MEP15\13-1533 MEP15_karol.kluczynski.rvt

© 2014 PIVOT ARCHITECTURE

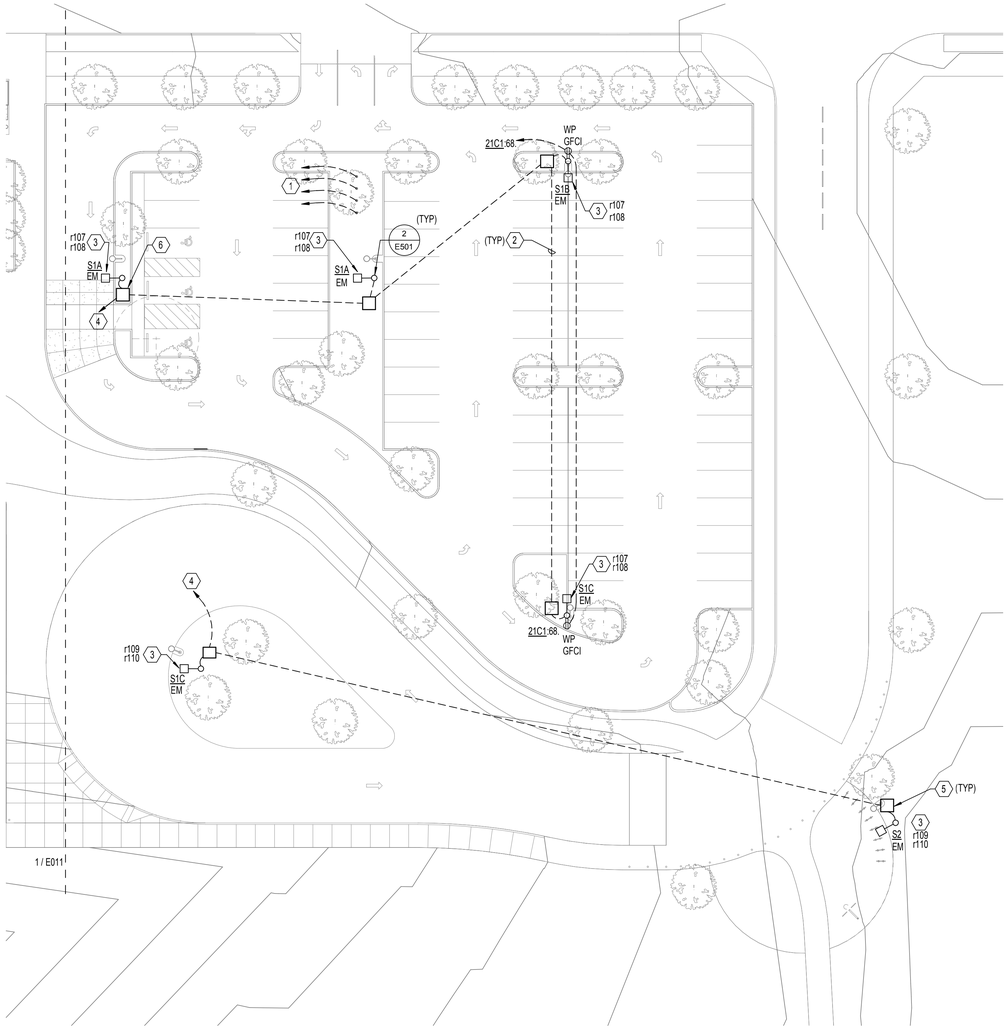

1 ENLARGED SITE PLAN EAST - ELECTRICAL
1" = 20'-0"

NORTH

GENERAL NOTES:

A. ELECTRICAL WORK SHOWN IS DIAGRAMMATIC AND IS MEANT TO REPRESENT GENERAL ROUTING AND EQUIPMENT LOCATIONS. NOT EVERY BEND, OFFSET, PULLBOX, ETC, IS SHOWN. CONTRACTOR SHALL PROVIDE ALL WORK REQUIRED FOR A COMPLETE INSTALLATION.

B. COORDINATE ALL UNDERGROUND SITE WORK WITH EXISTING AND NEW UTILITIES.

C. ALL BRANCH CIRCUITING AT BUILDING EXTERIOR AND SITE SHALL BE #10AWG MINIMUM, UNLESS OTHERWISE NOTED.

D. PROVIDE SEPARATE NEUTRAL CONDUCTOR FOR EACH BRANCH CIRCUIT.

E. REFER TO LIGHTING RELAY SCHEDULE ON SHEET E702 FOR ADDITIONAL INFORMATION.

F. PROVIDE NO MORE THAN (6) CURRENT CARRYING CONDUCTORS (INCLUDING NEUTRAL) PER HOMERUN.

G. REFER TO 'AJ LIGHTING CONTROL INTERFACE' DETAIL ON SHEET E501 FOR SITE CONTROL INFORMATION.

NOTES:

1. PROVIDE (4) 3" CONDUITS FROM ELECTRICAL ROOM C116 FOR FUTURE CAR CHARGING STATIONS. CAP AND LOCATE ENDS WITH PULL STRINGS. COORDINATE EXACT LOCATION WITH ARCHITECT.

2. PROVIDE 3/4"C FOR BRANCH CIRCUIT TO SITE LUMINAIRES.

3. PROVIDE (2) RELAYS PER POLE FOR LIGHTING CONTROL BASED ON TIME CLOCK INPUT.

4. CIRCUIT TO LCP-1C LOCATED IN MAIN ELECTRICAL ROOM C116. REFER TO RELAY SCHEDULE ON SHEET E702 FOR CIRCUITING INFORMATION.

5. PROVIDE OLDCASTLE CHRISTY N09 PULLBOX LOCKABLE, WITH BARRIER (OR APPROVED EQUAL) NEAR EACH POLE LIGHT BASE.

6. PROVIDE 2 #10 AWG CU. AND 1 #10 AWG CU GRD IN 3/4" CONDUIT TO MDF ROOM. OWNER TO FURNISH NETWORK SWITCH. CIRCUIT FROM PANEL MDF-9. REFER TO TECHNOLOGY DRAWING FOR ADDITIONAL INFORMATION.

PIVOT ARCHITECTURE

REGISTERED PROFESSIONAL ENGINEER
16123
OREGON
JULY 15, 1987
STEPHEN J. TURNA
2.09.16
EXPIRES 6-30-16

IBI GROUP

Iowa

PAE
Portland | San Francisco | Seattle
pae-engineers.com

BID SET
EUGENE SCHOOL DISTRICT 4J
120 WEST HILLIEARD AVENUE, EUGENE, OREGON 97404
RIVER ROAD / EL CAMINO DEL RIO ELEMENTARY SCHOOL

ENLARGED SITE PLAN EAST - ELECTRICAL

PROJECT #	1337.00
ISSUE DATE:	2.12.2016
DRAWN:	SC
CHECKED:	PIC

REVISIONS

E012

PRINTED ON: 2/11/2016 4:09:36 PM FROM FILE: C:\Revit Local Files\13-1533 MEP15\13-1533 MEP15_karol.kluczynski.rvt

© 2014 PIVOT ARCHITECTURE

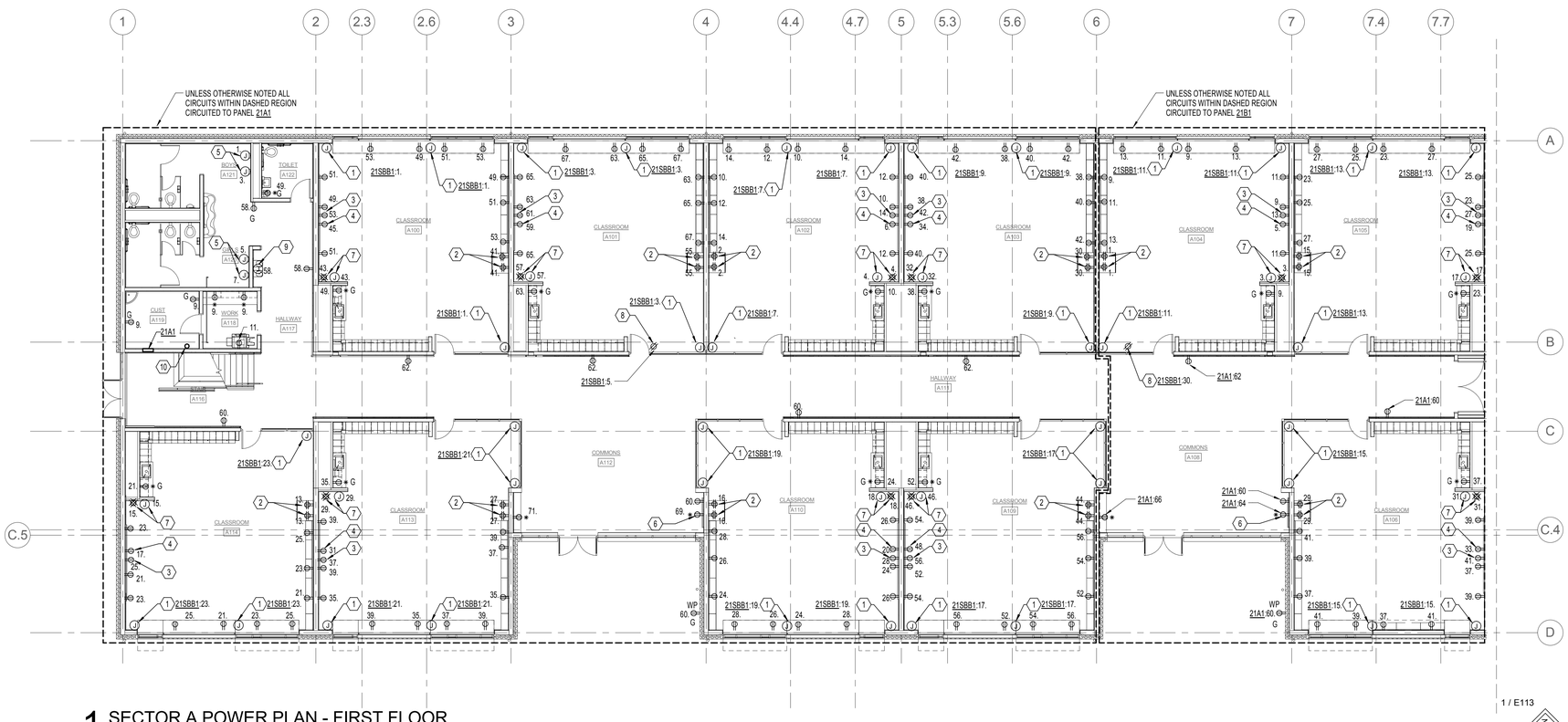

1 SECTOR A POWER PLAN - FIRST FLOOR

1/8" = 1'-0"

GENERAL NOTES:

A. AREA ABOVE ALL ELECTRICAL PANELS AND SWITCH BOARDS SHALL BE KEPT CLEAR OF ALL EQUIPMENT FOREIGN TO THE ELECTRICAL INSTALLATION INCLUDING PIPING, DUCTWORK, SUPPORTS, ETC. COORDINATE INSTALLATION WITH ALL OTHER TRADES.

B. ALL PENETRATIONS AND ROUTING PATHS OF EXPOSED CONDUIT SHALL BE COORDINATED AND REVIEWED BY ARCHITECT AND ENGINEER PRIOR TO INSTALLATION.

C. PROVIDE SEPARATE NEUTRAL CONDUCTOR FOR EACH BRANCH CIRCUIT, SHARED NEUTRALS ARE NOT PERMITTED.

D. PROVIDE NO MORE THAN (6) CURRENT CARRYING CONDUCTORS PER HOMERUN.

E. ALL BRANCH CIRCUITING SHALL BE #10 AWG., UNLESS OTHERWISE NOTED.

F. DEVICE AND EQUIPMENT CONNECTION LOCATIONS ARE SHOWN SCHEMATIC AND APPROXIMATE. REFER TO ARCHITECTURAL CEILING PLANS, FLOOR PLANS, ELEVATIONS AND SECTIONS FOR ADDITIONAL INFORMATION IMPACTING DEVICE ROUGH-IN. TYPICAL DIMENSIONED DEVICE LOCATIONS SHALL BE CONFIRMED WITH THE ARCHITECT PRIOR TO ROUGH-IN. WHERE CONFLICT OCCURS, DECISION OF THE ARCHITECT SHALL GOVERN.

G. PROVIDE WALL ROUGH-IN AT WALL CAVITY WHERE T-STATS ARE INDICATED, SINGLE GANG BOX WITH MUD RING, 1/2" CONDUIT TO ACCESSIBLE CEILING SPACE. COORDINATE WITH ALL OTHER TRADES TO AVOID CONFLICTS. MUST BE 18" AWAY FROM DOOR JAMBS.

NOTES:

1.PROVIDE CONNECTION TO MOTORIZED ROLLER SHADES. COORDINATE WITH MANUFACTURES FOR ADDITIONAL REQUIREMENTS.

2. RECEPTACLE FOR TABLET CHARGING. COORDINATE EXACT LOCATION WITH ARCHITECT.

3. RECEPTACLE FOR MONITOR SHALL BE MOUNTED BELOW PROJECTOR RECEPTACLE. COORDINATE EXACT HEIGHT WITH ARCHITECTURAL DRAWINGS AND AV DRAWINGS.

4. RECEPTACLE FOR SHORT THROW PROJECTOR, COORDINATE EXACT HEIGHT WITH ARCHITECTURAL DRAWINGS AND AV DRAWINGS.

5. PROVIDE CONNECTION TO HAND DRYERS. COORDINATE EXACT MOUNTING LOCATION WITH ARCHITECTURAL DRAWINGS.

6. PROVIDE CONNECTION FOR 32" DISPLAY SCREEN. RECEPTACLE SHALL BE MOUNTED BEHIND CENTER OF DISPLAY. COORDINATE EXACT LOCATION WITH A/V DRAWINGS.

7. PROVIDE CONNECTION TO A/V EQUIPMENT LOCATED IN CEILING MOUNTED ENCLOSURE (PROVIDED BY A/V CONTRACTOR). COORDINATE EXACT LOCATION WITH A/V DRAWINGS.

8. PROVIDE CONNECTION TO SHADE MOTOR TRANSFORMER. COORDINATE WITH MANUFACTURER FOR ADDITIONAL REQUIREMENTS.

9. PROVIDE CONNECTION TO BOTTLE FILLER.

10. 1-1/2" CONDUIT STUB-UP INTO WALL MOUNTED NEMA 1 6"X6"X6" ENCLOSURE. REFER TO SHEET E011 FOR PATHWAY OF FUTURE EXPANSION RACEWAY.

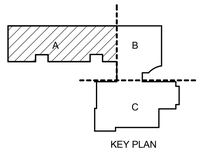

KEY PLAN

PIVOT ARCHITECTURE

REGISTERED PROFESSIONAL ENGINEER
OREGON
STEPHEN J. TURNER
EXPIRES 6-30-16

IBI GROUP

dowa

PAE
Portland | San Francisco | Seattle
pae-engineers.com

BID SET

4J EUGENE SCHOOL DISTRICT 4J
200 WEST HILLYARD AVENUE, EUGENE, OREGON 97404

RIVER ROAD / EL CAMINO DEL RIO ELEMENTARY SCHOOL

SECTOR A POWER PLAN - FIRST FLOOR

PROJECT #	13327.00
ISSUE DATE:	2.12.2016
DRAWN:	SC
CHECKED:	PKC

REVISIONS:

E111

PRINTED ON: 2/15/2016 9:09:00 AM FROM FILE: C:\Revit Local Files\13-1533 MEP15\13-1533 MEP15_Khem.Mai.rvt

© 2014 PIVOT ARCHITECTURE

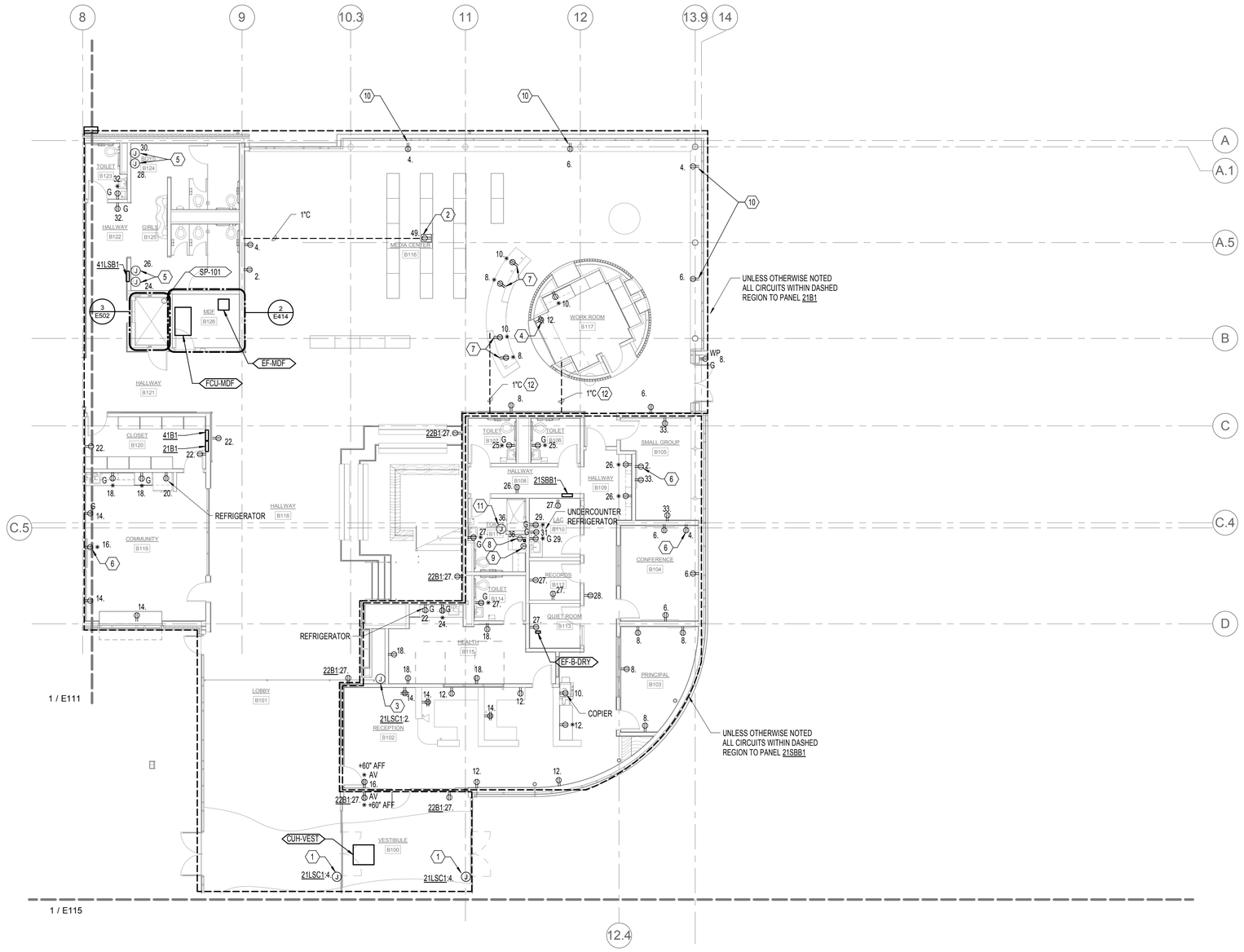

1 SECTOR B POWER PLAN - FIRST FLOOR

1/8" = 1'-0"

NORTH

GENERAL NOTES:

A. AREA ABOVE ALL ELECTRICAL PANELS AND SWITCH BOARDS SHALL BE KEPT CLEAR OF ALL EQUIPMENT FOREIGN TO THE ELECTRICAL INSTALLATION INCLUDING PIPING, DUCTWORK, SUPPORTS, ETC. COORDINATE INSTALLATION WITH ALL OTHER TRADES.

B. ALL PENETRATIONS AND ROUTING PATHS OF EXPOSED CONDUIT SHALL BE COORDINATED AND REVIEWED BY ARCHITECT AND ENGINEER PRIOR TO INSTALLATION.

C. PROVIDE SEPARATE NEUTRAL CONDUCTOR FOR EACH BRANCH CIRCUIT, SHARED NEUTRALS ARE NOT PERMITTED.

D. PROVIDE NO MORE THAN (6) CURRENT CARRYING CONDUCTORS PER HOMERUN.

E. REFER TO MECHANICAL EQUIPMENT CONNECTION SCHEDULE ON SHEET E701 FOR ADDITIONAL INFORMATION.

F. DEVICE AND EQUIPMENT CONNECTION LOCATIONS ARE SHOWN SCHEMATIC AND APPROXIMATE. REFER TO ARCHITECTURAL CEILING PLANS, FLOOR PLANS, ELEVATIONS AND SECTIONS FOR ADDITIONAL INFORMATION IMPACTING DEVICE ROUGH-IN. TYPICAL DIMENSIONED DEVICE LOCATIONS SHALL BE CONFIRMED WITH THE ARCHITECT PRIOR TO ROUGH-IN. WHERE CONFLICT OCCURS, DECISION OF THE ARCHITECT SHALL GOVERN.

NOTES:

1. PROVIDE CONNECTION TO DOOR OPERATOR. INSTALL AND CONNECT TO CONTROL SWITCHES. COORDINATE WITH VENDOR AND ARCHITECT FOR EXACT LOCATION AND ADDITIONAL REQUIREMENTS.

2. COMBINED POWER/DATA/AV FLOORBOX. PROVIDE LEGRAND 6-GANG FLOORBOX RFB6 OR APPROVED EQUAL. PROVIDE 3 RFB6GFI PLATE FOR AV, 1 RFB6DP PLATE FOR DATA , 1 RFB6B, 1 RFB6DP FOR ELECTRICAL AND COVER PBTCBK-NA. COORDINATE ADDITIONAL REQUIREMENTS WITH A/V DRAWINGS.

3. PROVIDE CONNECTION TO MOTORIZED GATE. COORDINATE WITH DOOR INSTALLER. INSTALL AND CONNECT CONTROL SWITCHES.

4. RECEPTACLES TO BE MOUNTED INSIDE CABINETRY. COORDINATE EXACT LOCATION WITH ARCHITECT.

5. PROVIDE CONNECTION TO HAND DRYER.COORDINATE EXACT MOUNTING LOCATION WITH MANUFACTURE.

6. RECEPTACLE FOR AV EQUIPMENT, COORDINATE EXACT HEIGHT WITH ARCHITECTURAL DRAWINGS.

7. RECEPTACLES TO BE MOUNTED IN CABINETRY ABOVE COUNTER.

8. PROVIDE RECEPTACLE FOR WASHER. COORDINATE EXACT LOCATION WITH ARCHITECT.

9. PROVIDE COMPLETE ELECTRICAL CONNECTION FOR DRYER (0F0I) FROM AVAILABLE SPACE IN PANEL 21SSB1. COORDINATE EXACT MANUFACTURER REQUIREMENTS WITH 4J PRIOR TO ROUGH-IN. COORDINATE EXACT LOCATION WITH ARCHITECT.

10. MOUNT RECEPTACLE IN BASE BOARD OF CASEWORK. COORDINATE EXACT LOCATION AND ADDITIONAL REQUIREMENTS WITH ARCHITECT.

11. PROVIDE CONNECTION TO DRYER BOOSTER FAN. COORDINATE EXACT LOCATION AND CONTROL REQUIREMENTS WITH VENDOR AND ARCHITECT.

12. ROUTE POWER TO FIXED ISLAND CASEWORK.

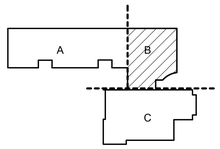

KEY PLAN

PIVOT ARCHITECTURE

REGISTERED PROFESSIONAL ENGINEER
STEPHEN J. TURNA
OREGON
JULY 15, 1987
EXPIRES: 6-30-16

IBI GROUP

PAE
Portland | San Francisco | Seattle
pae-engineers.com

BID SET

4J
EUGENE SCHOOL DISTRICT 4J
120 WEST HILLEARD AVENUE, EUGENE, OREGON 97404

RIVER ROAD / EL CAMINO DEL RIO ELEMENTARY SCHOOL

SECTOR B POWER PLAN - FIRST FLOOR

PROJECT #	1337.00
ISSUE DATE:	2.12.2016
DRAWN:	SC
CHECKED:	PSC

REVISIONS

E113

PRINTED ON: 2/11/2016 4:09:47 PM FROM FILE: C:\Revit Local Files\13-1533 MEP15\13-1533 MEP15_karol.kluczynski.rvt

© 2014 PIVOT ARCHITECTURE

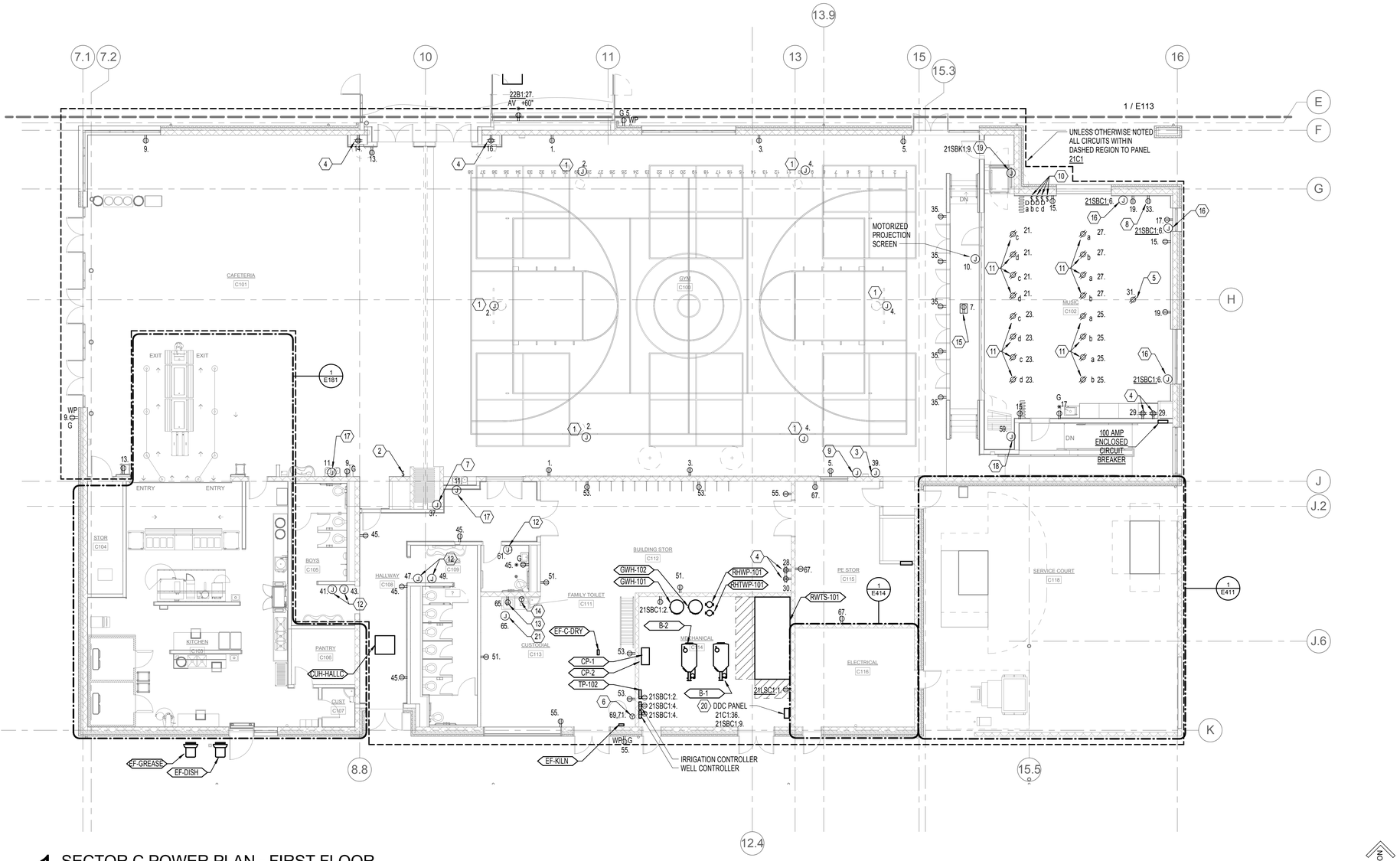

1 SECTOR C POWER PLAN - FIRST FLOOR
1/8" = 1'-0"

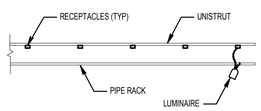

2 STAGE LIGHTING DETAIL
NONE

GENERAL NOTES:

A. AREA ABOVE ALL ELECTRICAL PANELS AND SWITCH BOARDS SHALL BE KEPT CLEAR OF ALL EQUIPMENT FOREIGN TO THE ELECTRICAL INSTALLATION INCLUDING PIPING, DUCTWORK, SUPPORTS, ETC. COORDINATE INSTALLATION WITH ALL OTHER TRADES.

B. ALL PENETRATIONS AND ROUTING PATHS OF EXPOSED CONDUIT SHALL BE COORDINATED AND REVIEWED BY ARCHITECT AND ENGINEER PRIOR TO INSTALLATION.

C. PROVIDE SEPARATE NEUTRAL CONDUCTOR FOR EACH BRANCH CIRCUIT, SHARED NEUTRALS ARE NOT PERMITTED.

D. PROVIDE NO MORE THAN (6) CURRENT CARRYING CONDUCTORS PER HOMERUN.

E. ALL BRANCH CIRCUITING SHALL BE #10AWG., UNLESS OTHERWISE NOTED.

F. REFER TO MECHANICAL EQUIPMENT CONNECTION SCHEDULE ON SHEET E701 FOR ADDITIONAL INFORMATION.

G. DEVICE AND EQUIPMENT CONNECTION LOCATIONS ARE SHOWN SCHEMATIC AND APPROXIMATE. REFER TO ARCHITECTURAL CEILING PLANS, FLOOR PLANS, ELEVATIONS AND SECTIONS FOR ADDITIONAL INFORMATION IMPACTING DEVICE ROUGH-IN. TYPICAL DIMENSIONED DEVICE LOCATIONS SHALL BE CONFIRMED WITH THE ARCHITECT PRIOR TO ROUGH-IN. WHERE CONFLICT OCCURS, DECISION OF THE ARCHITECT SHALL GOVERN.

NOTES:

1. PROVIDE CONNECTION TO MOTORIZED RETRACTABLE BASKETBALL HOOP. COORDINATE EXACT LOCATION WITH ARCHITECTURAL DRAWINGS. COORDINATE ANY ADDITIONAL CONTROL WIRING REQUIREMENTS WITH VENDOR.

2. PROVIDE CONNECTION TO SWITCH SKYLIGHT SHADES. COORDINATE WITH IT/AV DRAWINGS FOR ADDITIONAL REQUIREMENTS OF CAFETERIA SKYLIGHT SHADE CONTROL.

3. BASKETBALL HOOP CONTROLLERS, COORDINATE EXACT LOCATION WITH ARCHITECTURAL DRAWINGS.

4. RECEPTACLE TO SERVE AUDIO EQUIPMENT. AUDIO EQUIPMENT TO BE INSTALLED IN A FREE STANDING RACK. RECEPTACLES TO BE MOUNTED WITHIN CABINETRY.

5. RECEPTACLE FOR PROJECTOR, COORDINATE EXACT HEIGHT WITH ARCHITECTURAL DRAWINGS AND CONTROL REQUIREMENTS WITH A/V DRAWINGS.

6. KILN. PROVIDE 50A/2P, NEMA 6-50 RECEPTACLE, 2- #6 CU, 1- # 10 CU GRD IN 1"C VIA SDP.

7. PROVIDE CONNECTION AND CONTROL FOR MOTORIZED GYM WALL PARTITION.

8. PROVIDE CONNECTION FOR 27" DISPLAY SCREEN. RECEPTACLE SHALL BE MOUNTED BEHIND CENTER OF DISPLAY. COORDINATE EXACT LOCATION WITH A/V DRAWINGS.

9. PROVIDE CONNECTION TO SWITCH FOR GYM SKYLIGHT SHADE CONTROL.

10. DIMMER SWITCHES TO CONTROL THEATRICAL PIPE RACK RECEPTACLE.

11. POWER FOR THEATRICAL PIPE RACK. PROVIDE NEMA 5-15R TWIST LOCK SINGLE OUTLET. COORDINATE EXACT LOCATION AND ADDITIONAL REQUIREMENTS WITH ARCHITECT. REFER TO DETAIL 2/E115 FOR MOUNTING REQUIREMENTS.

12. PROVIDE CONNECTIONS FOR HAND DRYERS.COORDINATE EXACT MOUNTING LOCATION WITH MANUFACTURE.

13. PROVIDE CONNECTION FOR WASHER. COORDINATE EXACT LOCATION WITH ARCHITECT.

14. PROVIDE COMPLETE ELECTRICAL CONNECTION FOR DRYER FROM AVAILABLE SPACE IN PANEL 21C1. COORDINATE EXACT MANUFACTURER REQUIREMENTS WITH 4J PRIOR TO ROUGH-IN. COORDINATE EXACT LOCATION WITH ARCHITECT.

15. COMBINED POWER/DATA/AV FLOORBOX. PROVIDE LEGRAND 6-GANG FLOORBOX RFB6 OR APPROVED EQUAL. PROVIDE 3 RFB6GFI PLATE FOR AV, 1 RFB6DP PLATE FOR DATA , 1 RFB6B, 1 RFB6DP FOR ELECTRICAL AND COVER FPBTCBK-NA. COORDINATE ADDITIONAL REQUIREMENTS WITH A/V DRAWINGS.

16. PROVIDE CONNECTION AND CONTROL TO MOTORIZED ROLLER SHADES. COORDINATE WITH MANUFACTURER FOR ADDITIONAL REQUIREMENTS.

17. PROVIDE CONNECTION TO BOTTLE FILLER.

18. PROVIDE CONNECTION AND INSTALL CONTROL TO PARTITION WALL. COORDINATE ADDITIONAL CONTROL AS REQUIREMENTS WITH MANUFACTURERS AND LOCATION WITH ARCHITECT.

19. PROVIDE CONNECTION TO ADA LIFT. COORDINATE ADDITIONAL REQUIREMENTS WITH VENDOR.

20. PROVIDE BOTH NORMAL AND OPTIONAL STANDBY POWER CONNECTIONS TO DDC PANEL. COORDINATE EXACT LOCATION WITH ARCHITECT.

21. PROVIDE CONNECTION TO DRYER BOOSTER FAN. COORDINATE EXACT LOCATION AND CONTROL REQUIREMENTS WITH VENDOR AND ARCHITECT.

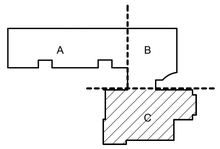

KEY PLAN

PIVOT ARCHITECTURE

REGISTERED PROFESSIONAL ENGINEER
STEPHEN J. TURNA
OREGON
JULY 16, 1987
EXPIRES: 6-30-16

IBI GROUP

PAE
Portland | San Francisco | Seattle
pae-engineers.com

BID SET
EUGENE SCHOOL DISTRICT 4J
120 WEST HILLYARD AVENUE, EUGENE, OREGON 97404
RIVER ROAD / EL CAMINO DEL RIO ELEMENTARY SCHOOL

SECTOR C POWER PLAN - FIRST FLOOR

PROJECT #	1537.00
ISSUE DATE:	2.12.2016
DRAWN:	SC
CHECKED:	PRC

REVISIONS

E115

PRINTED ON: 2/11/2016 4:09:52 PM FROM FILE: C:\Revit Local Files\13-1533 MEP15_karol.kluczynski.rvt

© 2014 PIVOT ARCHITECTURE

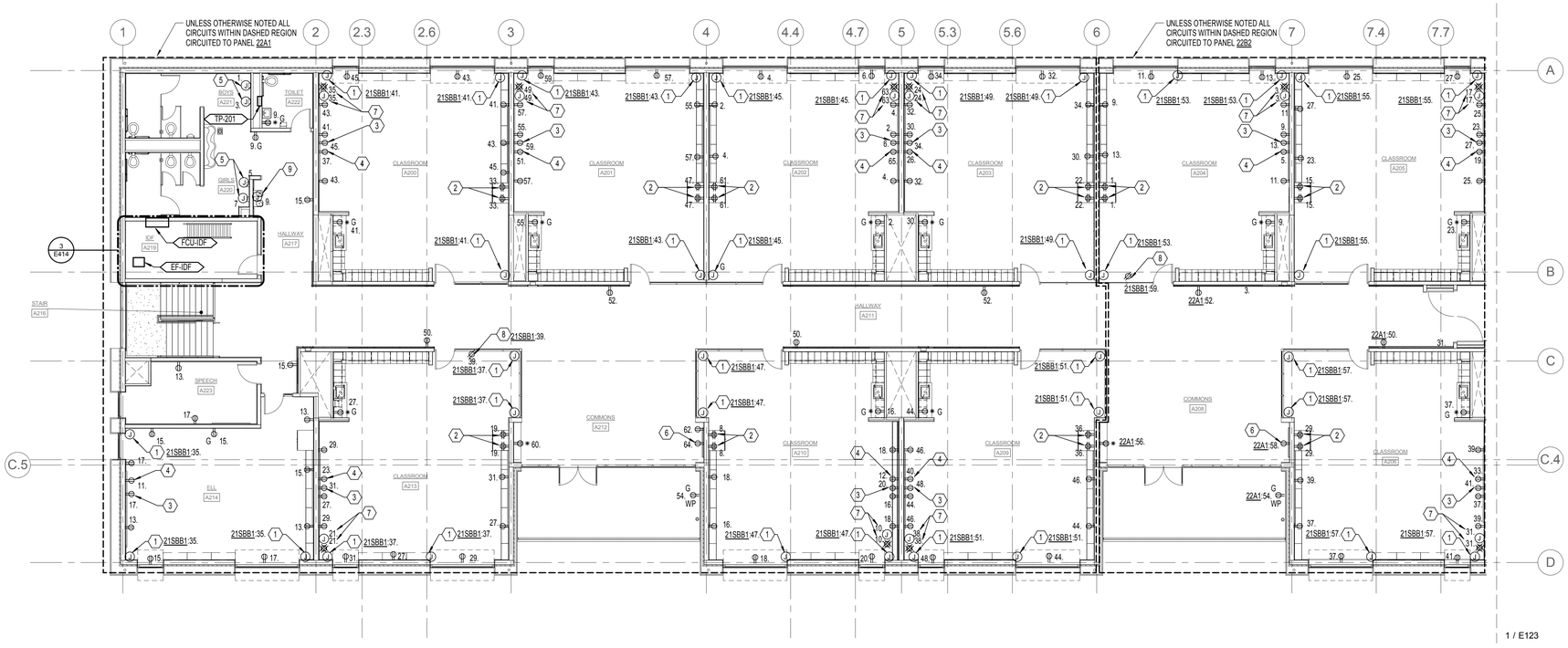

1 SECTOR A POWER PLAN - SECOND FLOOR

1/8" = 1'-0"

GENERAL NOTES:

A. AREA ABOVE ALL ELECTRICAL PANELS AND SWITCH BOARDS SHALL BE KEPT CLEAR OF ALL EQUIPMENT FOREIGN TO THE ELECTRICAL INSTALLATION INCLUDING PIPING, DUCTWORK, SUPPORTS, ETC. COORDINATE INSTALLATION WITH ALL OTHER TRADES.

B. ALL PENETRATIONS AND ROUTING PATHS OF EXPOSED CONDUIT SHALL BE COORDINATED AND REVIEWED BY ARCHITECT AND ENGINEER PRIOR TO INSTALLATION.

C. PROVIDE SEPARATE NEUTRAL CONDUCTOR FOR EACH BRANCH CIRCUIT, SHARED NEUTRALS ARE NOT PERMITTED.

D. PROVIDE NO MORE THAN (6) CURRENT CARRYING CONDUCTORS PER HOMERUN.

E. ALL BRANCH CIRCUITING SHALL BE #10AWG., UNLESS OTHERWISE NOTED.

F. REFER TO MECHANICAL EQUIPMENT CONNECTION SCHEDULE ON SHEET E701 FOR ADDITIONAL INFORMATION.

G. DEVICE AND EQUIPMENT CONNECTION LOCATIONS ARE SHOWN SCHEMATIC AND APPROXIMATE. REFER TO ARCHITECTURAL CEILING PLANS, FLOOR PLANS, ELEVATIONS AND SECTIONS FOR ADDITIONAL INFORMATION IMPACTING DEVICE ROUGH-IN. TYPICAL DIMENSIONED DEVICE LOCATIONS SHALL BE CONFIRMED WITH THE ARCHITECT PRIOR TO ROUGH-IN. WHERE CONFLICT OCCURS, DECISION OF THE ARCHITECT SHALL GOVERN.

H. PROVIDE WALL ROUGH-IN AT WALL CAVITY WHERE T-STATS ARE INDICATED, SINGLE GANG BOX WITH MUD RING, 1/2" CONDUIT TO ACCESSIBLE CEILING SPACE. COORDINATE WITH ALL OTHER TRADES TO AVOID CONFLICTS. MUST BE 18" AWAY FROM DOOR JAMBS.

NOTES:

1.PROVIDE CONNECTION TO MOTORIZED ROLLER SHADES. COORDINATE WITH MANUFACTURES FOR ADDITIONAL REQUIREMENTS.

2. RECEPTACLE FOR TABLET CHARGING. COORDINATE EXACT LOCATION WITH ARCHITECT.

3. RECEPTACLE FOR MONITOR SHALL BE MOUNTED BELOW PROJECTOR RECEPTACLE. COORDINATE EXACT HEIGHT WITH ARCHITECTURAL DRAWINGS AND AV DRAWINGS.

4. RECEPTACLE FOR SHORT THROW PROJECTOR, COORDINATE EXACT HEIGHT WITH ARCHITECTURAL DRAWINGS.

5. PROVIDE CONNECTIONS FOR HAND DRYERS.COORDINATE EXACT MOUNTING LOCATION WITH ARCHITECTURAL DRAWINGS.

6. PROVIDE CONNECTION FOR 32" DISPLAY SCREEN. RECEPTACLE SHALL BE MOUNTED BEHIND CENTER OF DISPLAY. COORDINATE EXACT LOCATION WITH A/V DRAWINGS.

7. PROVIDE CONNECTION TO A/V EQUIPMENT LOCATED IN CEILING MOUNTED ENCLOSURE (PROVIDED BY A/V CONTRACTOR). COORDINATE EXACT LOCATION WITH A/V DRAWINGS.

8. PROVIDE CONNECTION TO SHADE MOTOR TRANSFORMER. COORDINATE WITH MANUFACTURER FOR ADDITIONAL REQUIREMENTS.

9. PROVIDE CONNECTION TO BOTTLE FILLER.

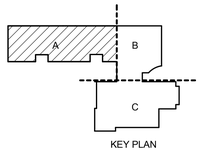

KEY PLAN

PIVOT ARCHITECTURE

REGISTERED PROFESSIONAL ENGINEER 11612 OREGON STEPHEN J. TURNER EXPIRES 6-30-16

IBI GROUP

dowa

PAE Portland | San Francisco | Seattle pae-engineers.com

BID SET

EUGENE SCHOOL DISTRICT 4J
200 WEST HILLRIDGE AVENUE, EUGENE, OREGON 97404

RIVER ROAD / EL CAMINO DEL RIO ELEMENTARY SCHOOL

SECTOR A POWER PLAN - SECOND FLOOR

PROJECT #	1337.00
ISSUE DATE:	2.12.2016
DRAWN:	SC
CHECKED:	PIC

REVISIONS

E121

PRINTED ON: 2/15/2016 9:09:05 AM FROM FILE: C:\Revit Local Files\13-1533 MEP15\13-1533 MEP15_Khiem.Mai.rvt

© 2014 PIVOT ARCHITECTURE

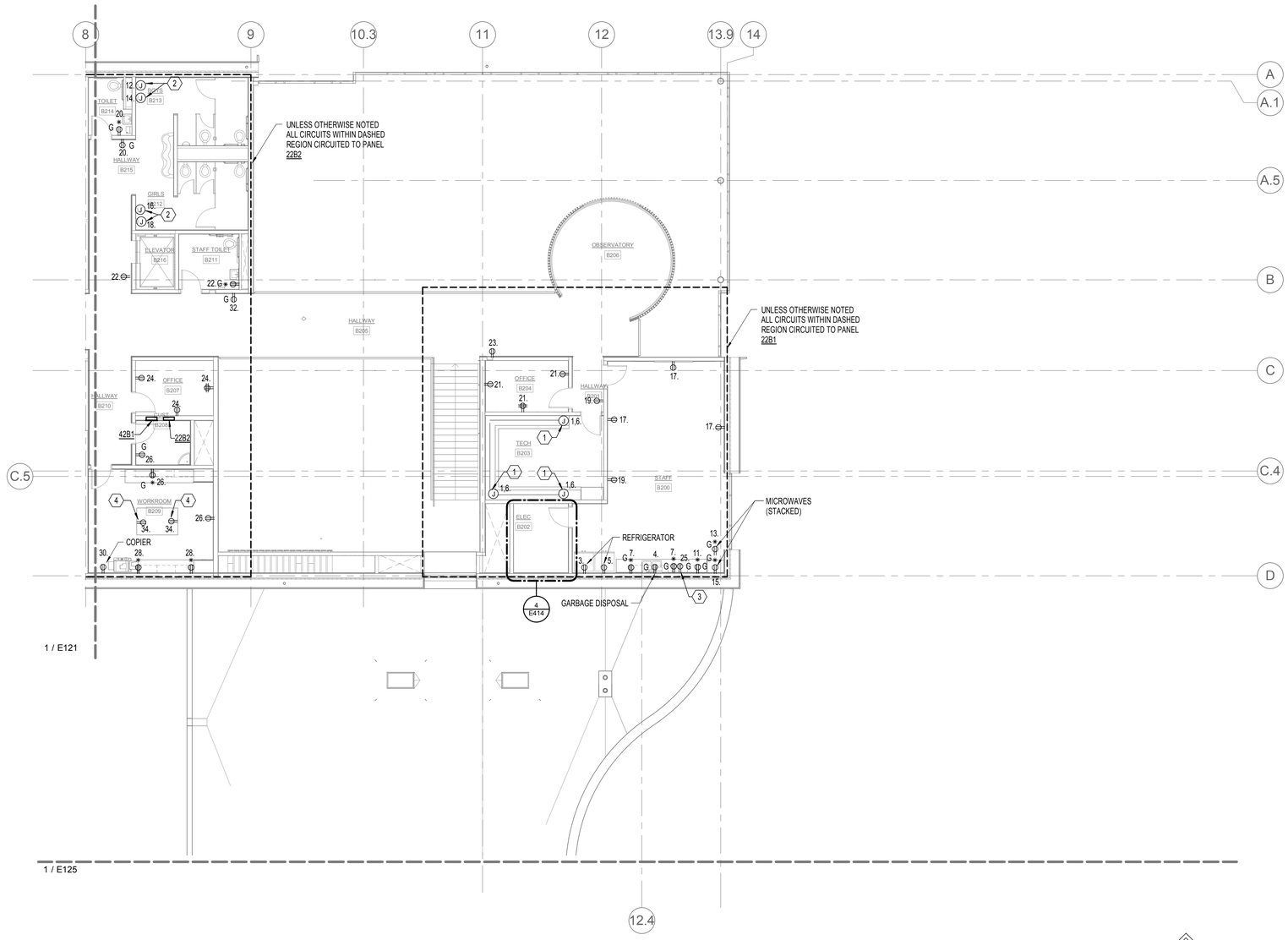

1 SECTOR B POWER PLAN - SECOND FLOOR

5 1/8" = 1'-0"

NORTH

GENERAL NOTES:

A. AREA ABOVE ALL ELECTRICAL PANELS AND SWITCH BOARDS SHALL BE KEPT CLEAR OF ALL EQUIPMENT FOREIGN TO THE ELECTRICAL INSTALLATION INCLUDING PIPING, DUCTWORK, SUPPORTS, ETC. COORDINATE INSTALLATION WITH ALL OTHER TRADES.

B. ALL PENETRATIONS AND ROUTING PATHS OF EXPOSED CONDUIT SHALL BE COORDINATED AND REVIEWED BY ARCHITECT AND ENGINEER PRIOR TO INSTALLATION.

C. PROVIDE SEPARATE NEUTRAL CONDUCTOR FOR EACH BRANCH CIRCUIT, SHARED NEUTRALS ARE NOT PERMITTED.

D. PROVIDE NO MORE THAN (6) CURRENT CARRYING CONDUCTORS PER HOMERUN.

E. REFER TO MECHANICAL EQUIPMENT CONNECTION SCHEDULE ON SHEET E701 FOR ADDITIONAL INFORMATION.

F. DEVICE AND EQUIPMENT CONNECTION LOCATIONS ARE SHOWN SCHEMATIC AND APPROXIMATE. REFER TO ARCHITECTURAL CEILING PLANS, FLOOR PLANS, ELEVATIONS AND SECTIONS FOR ADDITIONAL INFORMATION IMPACTING DEVICE ROUGH-IN. TYPICAL DIMENTIONED DEVICE LOCATIONS SHALL BE CONFIRMED WITH THE ARCHITECT PRIOR TO ROUGH-IN. WHERE CONFLICT OCCURS, DECISION OF THE ARCHITECT SHALL GOVERN.

NOTES:

1. PROVIDE TWO SURFACE RACEWAY ONE AT 40" AFF AND ONE AT 56" AFF AS SHOWN. RECEPTACLES 6" SPACING FROM CENTER. WIREMOLD 4000 OR APPROVED EQUAL.

2. PROVIDE CONNECTIONS FOR HAND DRYERS. COORDINATE EXACT MOUNTING LOCATION WITH ARCHITECTURAL DRAWINGS.

3. DISHWASHER. PROVIDE APPLIANCE CONDUIT AND CAP PER MANUFACTURERS RECOMMENDATION.

4. MOUNTED RECEPTACLE IN CABINETRY. COORDINATE WITH ARCHITECT AND MANUFACTURE FOR ADDITIONAL REQUIREMENTS.

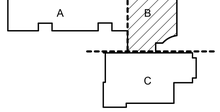

KEY PLAN

PIVOT ARCHITECTURE

REGISTERED PROFESSIONAL ENGINEER
16127
OREGON
JULY 15, 1987
STEPHEN J. TURNER
EXPIRES: 6-30-16

IBI GROUP

PAE
Portland | San Francisco | Seattle
pae-engineers.com

BID SET

EUGENE SCHOOL DISTRICT 4J
120 WEST HILLIEARD AVENUE, EUGENE, OREGON 97404

RIVER ROAD / EL CAMINO DEL RIO ELEMENTARY SCHOOL

SECTOR B POWER PLAN - SECOND FLOOR

PROJECT #	1537.00
ISSUE DATE:	2.12.2016
DRAWN:	SC
CHECKED:	PIC

REVISIONS

E123

PRINTED ON: 2/11/2016 4:10:02 PM FROM FILE: C:\Revit Local Files\13-1533 MEP15\13-1533 MEP15_karol.kluczynski.rvt

© 2014 PIVOT ARCHITECTURE

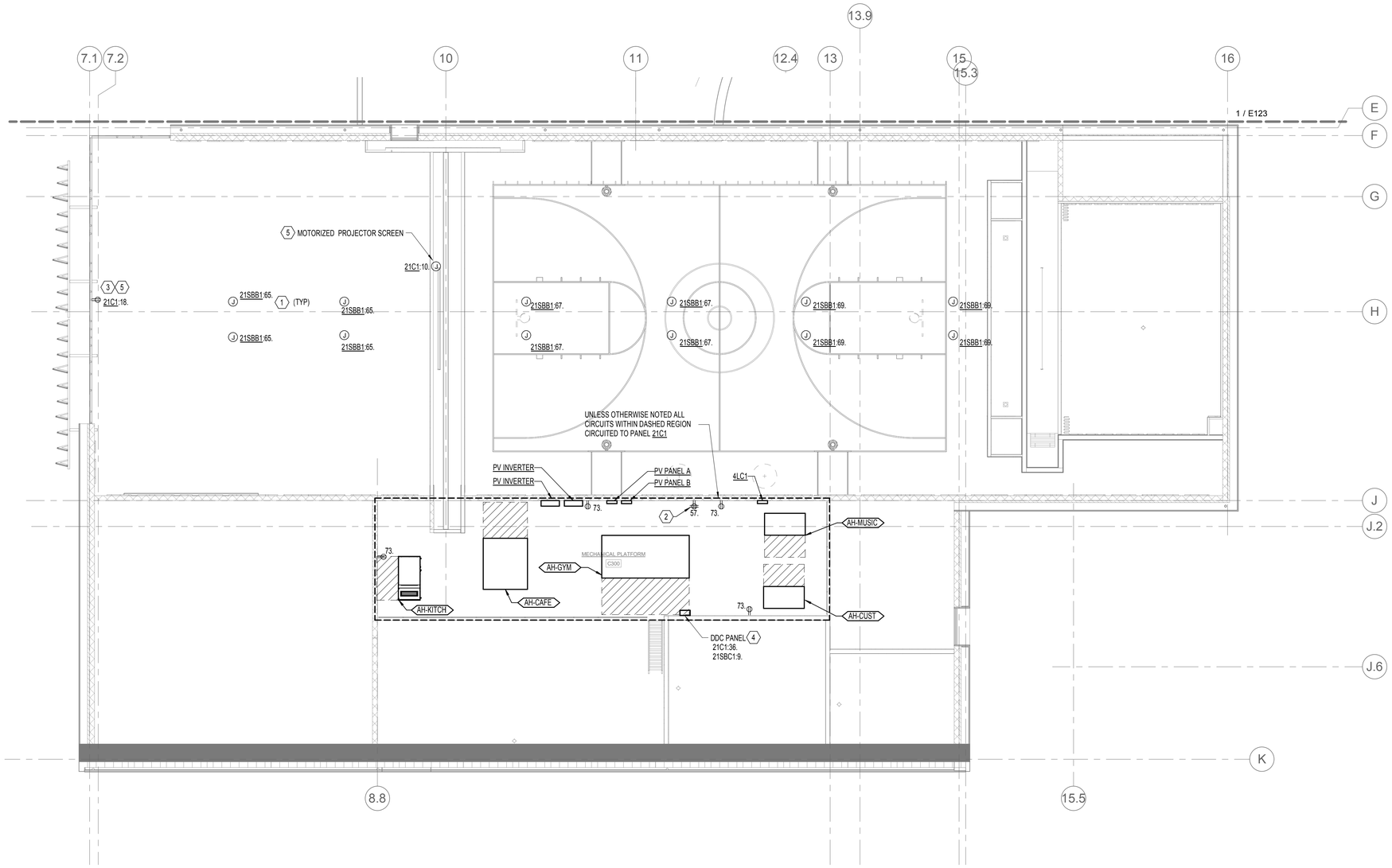

1 SECTOR C POWER PLAN - SECOND FLOOR
1/8" = 1'-0"

NORTH

GENERAL NOTES:

A. AREA ABOVE ALL ELECTRICAL PANELS AND SWITCH BOARDS SHALL BE KEPT CLEAR OF ALL EQUIPMENT FOREIGN TO THE ELECTRICAL INSTALLATION INCLUDING PIPING, DUCTWORK, SUPPORTS, ETC. COORDINATE INSTALLATION WITH ALL OTHER TRADES.

B. ALL PENETRATIONS AND ROUTING PATHS OF EXPOSED CONDUIT SHALL BE COORDINATED AND REVIEWED BY ARCHITECT AND ENGINEER PRIOR TO INSTALLATION.

C. PROVIDE SEPARATE NEUTRAL CONDUCTOR FOR EACH BRANCH CIRCUIT, SHARED NEUTRALS ARE NOT PERMITTED.

D. PROVIDE NO MORE THAN (6) CURRENT CARRYING CONDUCTORS PER HOMERUN.

E. ALL BRANCH CIRCUITING SHALL BE #10AWG., UNLESS OTHERWISE NOTED.

F. REFER TO MECHANICAL EQUIPMENT CONNECTION SCHEDULE ON SHEET E701 FOR ADDITIONAL INFORMATION.

G. DEVICE AND EQUIPMENT CONNECTION LOCATIONS ARE SHOWN SCHEMATIC AND APPROXIMATE. REFER TO ARCHITECTURAL CEILING PLANS, FLOOR PLANS, ELEVATIONS AND SECTIONS FOR ADDITIONAL INFORMATION IMPACTING DEVICE ROUGH-IN. TYPICAL DIMENSIONED DEVICE LOCATIONS SHALL BE CONFIRMED WITH THE ARCHITECT PRIOR TO ROUGH-IN. WHERE CONFLICT OCCURS, DECISION OF THE ARCHITECT SHALL GOVERN.

NOTES:

1. PROVIDE POWER CONNECTION TO SKYLIGHT MOTORIZED SHADES. REFER TO IT/AV DRAWING FOR CONTROL REQUIREMENTS.

2. PROVIDE DEDICATED CIRCUIT FOR IDF 4-POST RACK, VERIFY EXACT LOCATION WITH TECHNOLOGY DRAWINGS.

3. WALL MOUNTED RECEPTACLE AT 16' AFF FOR PROJECTOR. COORDINATE EXACT LOCATION WITH A/V DRAWINGS.

4. PROVIDE BOTH NORMAL AND OPTIONAL STANDBY POWER CONNECTIONS TO DDC PANEL. COORDINATE EXACT LOCATION WITH ARCHITECT.

5. REFER TO A/V DRAWINGS FOR CONTROL INTENT AND ADDITIONAL REQUIREMENTS.

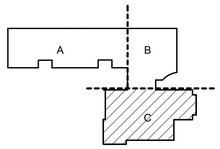

KEY PLAN

PIVOT ARCHITECTURE

REGISTERED PROFESSIONAL ENGINEER
16123
OREGON
JULY 15, 1987
STEPHEN J. TURNA
2.09.16
EXPIRES: 6-30-16

IBI GROUP

PAE
Portland | San Francisco | Seattle
pae-engineers.com

BID SET

EUGENE SCHOOL DISTRICT 4J
120 WEST HILLEARD AVENUE, EUGENE, OREGON 97404

RIVER ROAD / EL CAMINO DEL RIO ELEMENTARY SCHOOL

SECTOR C POWER PLAN - SECOND FLOOR

PROJECT #:	1337.00
ISSUE DATE:	2.12.2016
DRAWN:	SC
CHECKED:	PVC

REVISIONS:

E125

PRINTED ON: 2/11/2016 4:10:05 PM FROM FILE: C:\Revit Local Files\13-1533 MEP15\13-1533 MEP15_karol.kluczynski.rvt

© 2014 PIVOT ARCHITECTURE

GENERAL NOTES:

A. THE FIRE ALARM IS A CONTRACTOR DESIGN-BUILD SYSTEM ADDITIONAL DEVICES MAY BE REQUIRED TO COMPLY WITH CODE. CONTRACTOR SHALL PROVIDE ADDITIONAL FIRE ALARM DEVICES, ACCESSORIES AND ANY ADDITIONAL ITEMS REQUIRED FOR A COMPLETE AND OPERATIONAL CODE COMPLIANT SYSTEM. REFERENCE SPECIFICATION DIVISION 28 30 00 FOR ADDITIONAL INFORMATION.

B. IN ADDITION TO CODE MINIMUM FIRE ALARM COVERAGE THE CONTRACTOR SHALL PROVIDE SMOKE DETECTION SPOT COVERAGE IN CORRIDORS AND COMMON AREAS, AND MANUAL PULL STATIONS AT EXITS PER THE OWNERS DIRECTION.

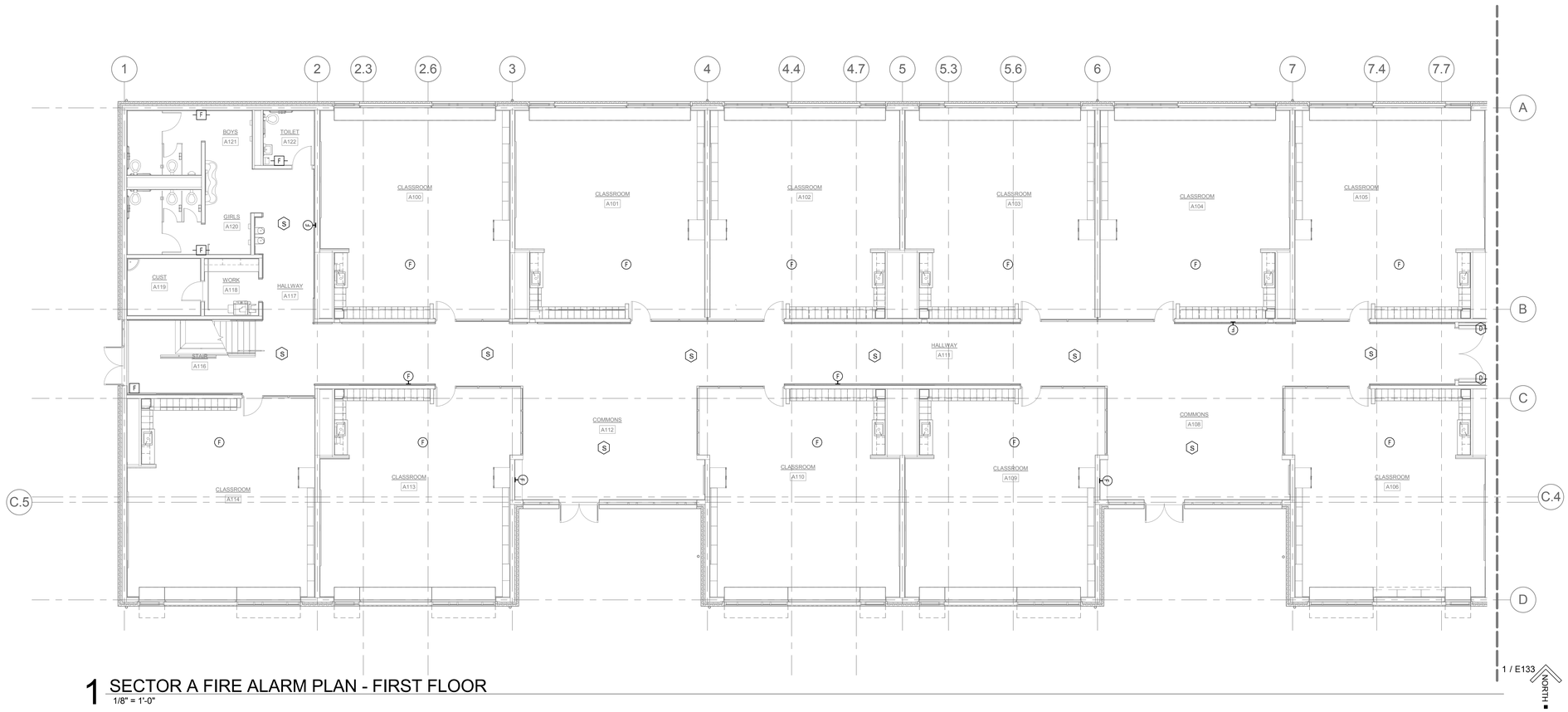

1 SECTOR A FIRE ALARM PLAN - FIRST FLOOR
1/8" = 1'-0"

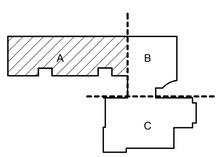

KEY PLAN

PIVOT ARCHITECTURE

REGISTERED PROFESSIONAL ENGINEER
16123
OREGON
JULY 15, 1987
STEPHEN J. TURNA
02.09.16
EXPIRES 6-30-16

IBI GROUP

dowa

PAE
Portland | San Francisco | Seattle
pae-engineers.com

BID SET
EUGENE SCHOOL DISTRICT 4J
120 WEST HILLYARD AVENUE, EUGENE, OREGON 97404
RIVER ROAD / EL CAMINO DEL RIO ELEMENTARY SCHOOL

SECTOR A FIRE ALARM PLAN - FIRST FLOOR

PROJECT #	1337.00
ISSUE DATE:	2.12.2016
DRAWN:	SC
CHECKED:	PRC

REVISIONS

E131

PRINTED ON: 2/11/2016 4:10:10 PM FROM FILE: C:\Revit Local Files\13-1533 MEP15\13-1533 MEP15_karol.kluczynski.rvt

© 2014 PIVOT ARCHITECTURE

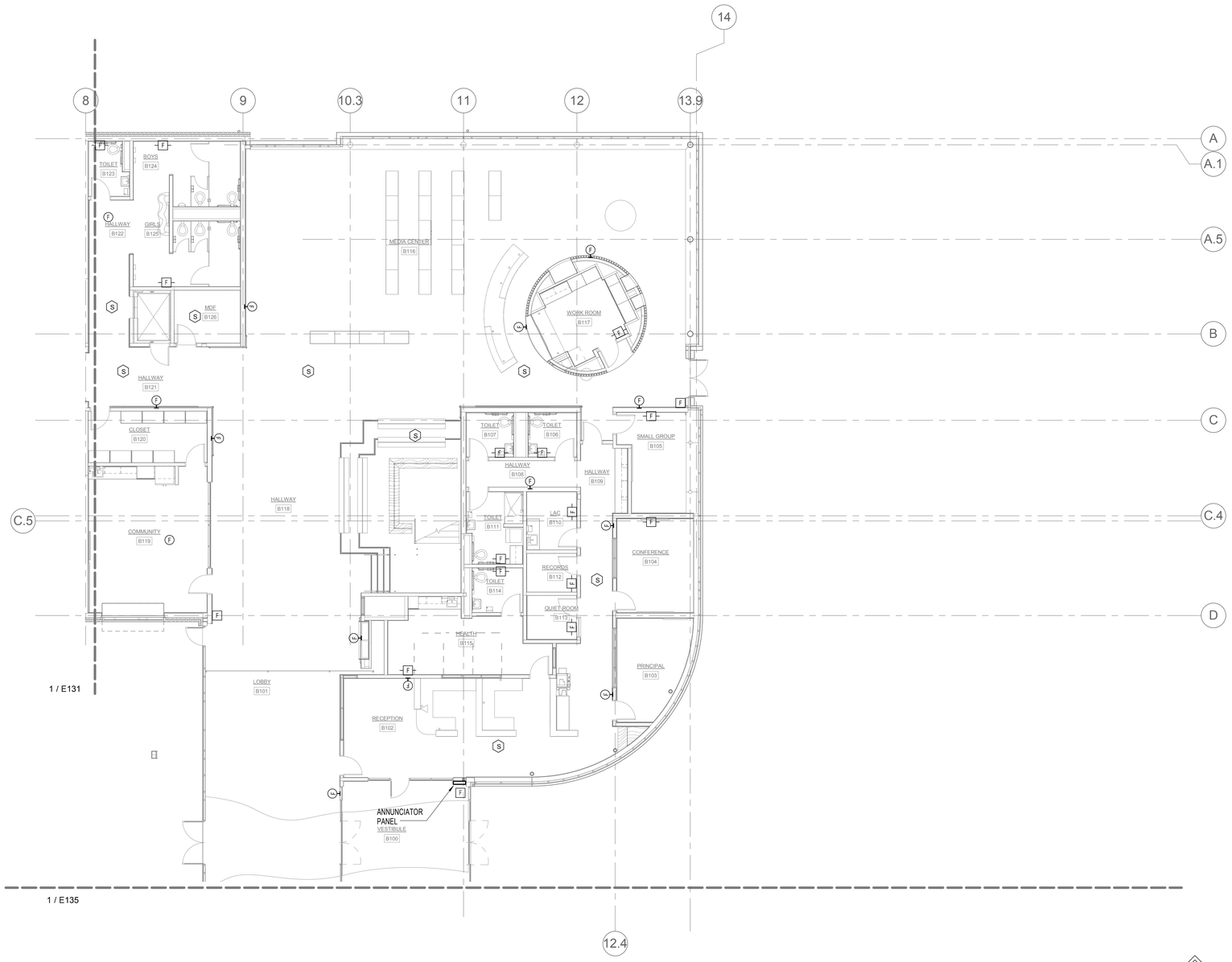

1 SECTOR B FIRE ALARM PLAN - FIRST FLOOR
1/8" = 1'-0"

GENERAL NOTES:

A. THE FIRE ALARM IS A CONTRACTOR DESIGN-BUILD SYSTEM ADDITIONAL DEVICES MAY BE REQUIRED TO COMPLY WITH CODE. CONTRACTOR SHALL PROVIDE ADDITIONAL FIRE ALARM DEVICES, ACCESSORIES AND ANY ADDITIONAL ITEMS REQUIRED FOR A COMPLETE AND OPERATIONAL CODE COMPLIANT SYSTEM. REFERENCE SPECIFICATION DIVISION 28 30 00 FOR ADDITIONAL INFORMATION.

B. IN ADDITION TO CODE MINIMUM FIRE ALARM COVERAGE THE CONTRACTOR SHALL PROVIDE SMOKE DETECTION SPOT COVERAGE IN CORRIDORS AND COMMON AREAS, AND MANUAL PULL STATIONS AT EXITS PER THE OWNERS DIRECTION.

PAE
Portland | San Francisco | Seattle
pae-engineers.com

BID SET

EUGENE SCHOOL DISTRICT 4J
120 WEST HILLEARD AVENUE, EUGENE, OREGON 97404
RIVER ROAD / EL CAMINO DEL RIO ELEMENTARY SCHOOL

SECTOR B FIRE ALARM PLAN - FIRST FLOOR

PROJECT #	1337.00
ISSUE DATE:	2.12.2016
DRAWN:	SC
CHECKED:	PSC

REVISIONS

E133

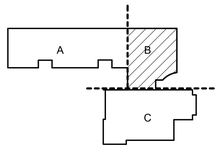

KEY PLAN

PRINTED ON: 2/11/2016 4:10:14 PM FROM FILE: C:\Revit Local Files\13-1533 MEP15\13-1533 MEP15_karol.kliczynski.rvt

© 2014 PIVOT ARCHITECTURE

GENERAL NOTES:

A. THE FIRE ALARM IS A CONTRACTOR DESIGN-BUILD SYSTEM ADDITIONAL DEVICES MAY BE REQUIRED TO COMPLY WITH CODE. CONTRACTOR SHALL PROVIDE ADDITIONAL FIRE ALARM DEVICES, ACCESSORIES AND ANY ADDITIONAL ITEMS REQUIRED FOR A COMPLETE AND OPERATIONAL CODE COMPLIANT SYSTEM. REFERENCE SPECIFICATION DIVISION 28 30 00 FOR ADDITIONAL INFORMATION.

B. IN ADDITION TO CODE MINIMUM FIRE ALARM COVERAGE THE CONTRACTOR SHALL PROVIDE SMOKE DETECTION SPOT COVERAGE IN CORRIDORS AND COMMON AREAS, AND MANUAL PULL STATIONS AT EXITS PER THE OWNERS DIRECTION.

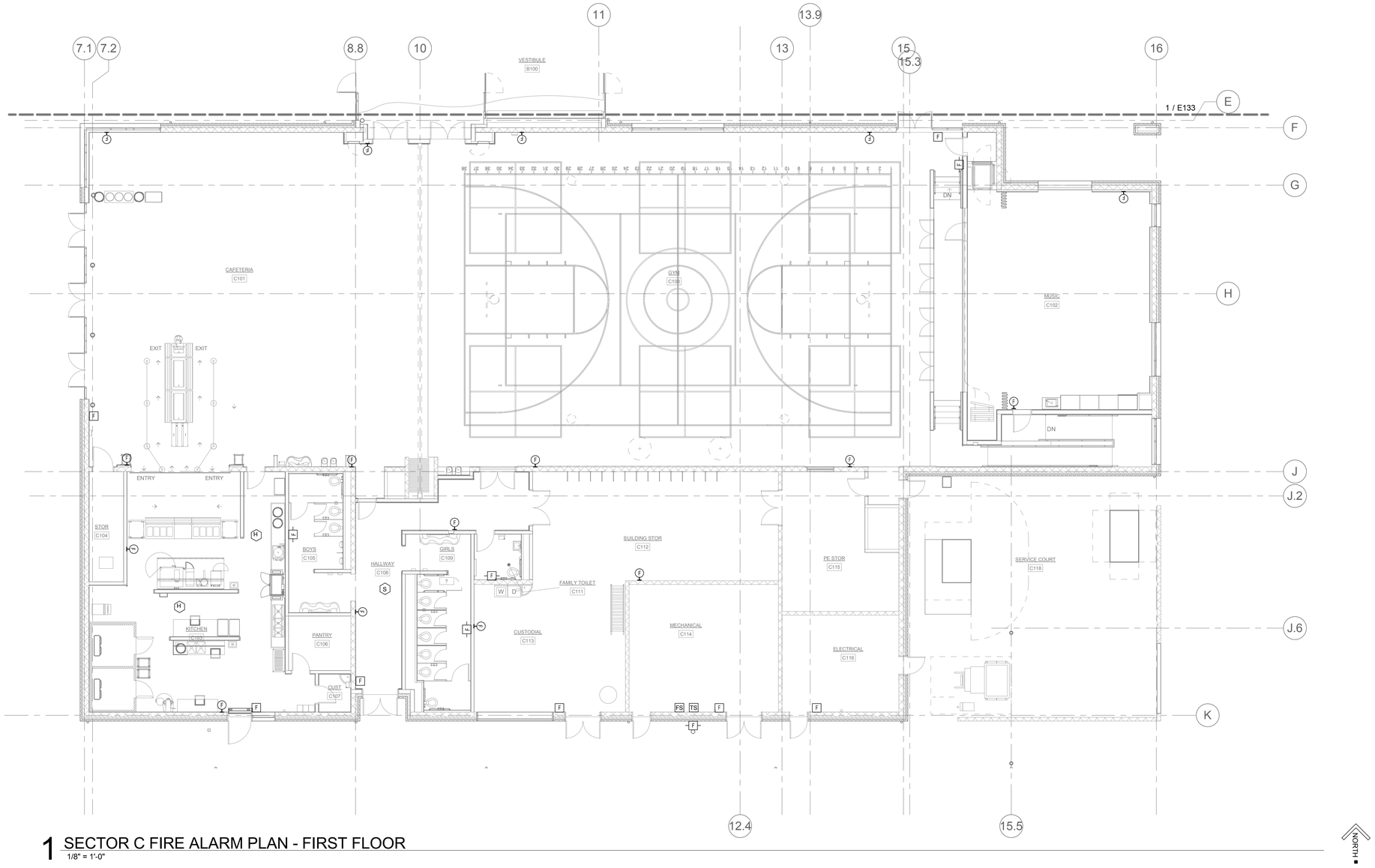

1 SECTOR C FIRE ALARM PLAN - FIRST FLOOR
1/8" = 1'-0"

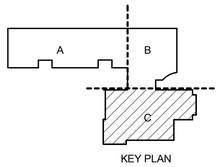

KEY PLAN

PIVOT ARCHITECTURE

REGISTERED PROFESSIONAL ENGINEER
16612
OREGON
JULY 15, 1987
STEPHEN J. TURNA
2.09.16
EXPIRES 6-30-16

IBI GROUP

dowa

PAE
Portland | San Francisco | Seattle
pae-engineers.com

BID SET

4J
EUGENE SCHOOL DISTRICT 4J
120 WEST HILLEARD AVENUE, EUGENE, OREGON 97404
RIVER ROAD / EL CAMINO DEL RIO ELEMENTARY SCHOOL

SECTOR C FIRE ALARM PLAN - FIRST FLOOR

PROJECT #:	1337.00
ISSUE DATE:	2.12.2016
DRAWN:	SC
CHECKED:	PIC

REVISIONS

E135

PRINTED ON: 2/11/2016 4:10:18 PM FROM FILE: C:\Revit Local Files\13-1533 MEP15\13-1533 MEP15_sanol.kluczynski.rvt

© 2014 PIVOT ARCHITECTURE

GENERAL NOTES:

A. THE FIRE ALARM IS A CONTRACTOR DESIGN-BUILD SYSTEM ADDITIONAL DEVICES MAY BE REQUIRED TO COMPLY WITH CODE. CONTRACTOR SHALL PROVIDE ADDITIONAL FIRE ALARM DEVICES, ACCESSORIES AND ANY ADDITIONAL ITEMS REQUIRED FOR A COMPLETE AND OPERATIONAL CODE COMPLIANT SYSTEM. REFERENCE SPECIFICATION DIVISION 28 30 00 FOR ADDITIONAL INFORMATION.

B. IN ADDITION TO CODE MINIMUM FIRE ALARM COVERAGE THE CONTRACTOR SHALL PROVIDE SMOKE DETECTION SPOT COVERAGE IN CORRIDORS AND COMMON AREAS, AND MANUAL PULL STATIONS AT EXITS PER THE OWNERS DIRECTION.

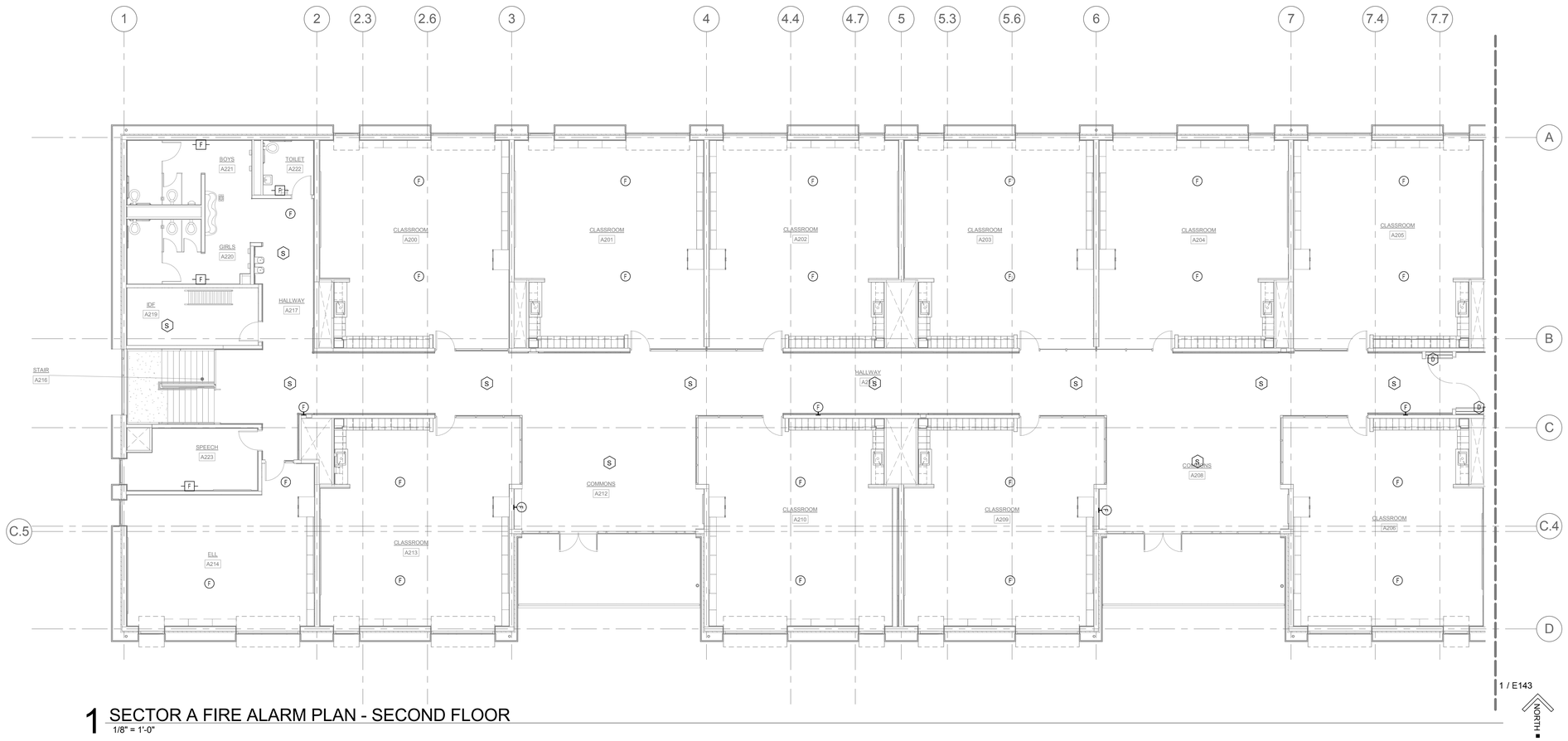

1 SECTOR A FIRE ALARM PLAN - SECOND FLOOR
1/8" = 1'-0"

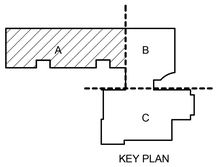

KEY PLAN

PIVOT ARCHITECTURE

REGISTERED PROFESSIONAL ENGINEER
16123
OREGON
JULY 15, 1987
STEPHEN J. ZURNA
12.09.16
EXPIRES 6-30-16

IBI GROUP

Iowa

PAE
Portland | San Francisco | Seattle
pae-engineers.com

BID SET

4J
EUGENE SCHOOL DISTRICT 4J
120 WEST HILLIEARD AVENUE, EUGENE, OREGON 97404

RIVER ROAD / EL CAMINO DEL RIO ELEMENTARY SCHOOL

SECTOR A FIRE ALARM PLAN - SECOND FLOOR

PROJECT #	1337.00
ISSUE DATE:	2.12.2016
DRAWN:	SC
CHECKED:	PIC

REVISIONS

E141

PRINTED ON: 2/11/2016 4:10:22 PM FROM FILE: C:\Revit Local Files\13-1533 MEP15\13-1533 MEP15_karol.kluczynski.rvt

© 2014 PIVOT ARCHITECTURE

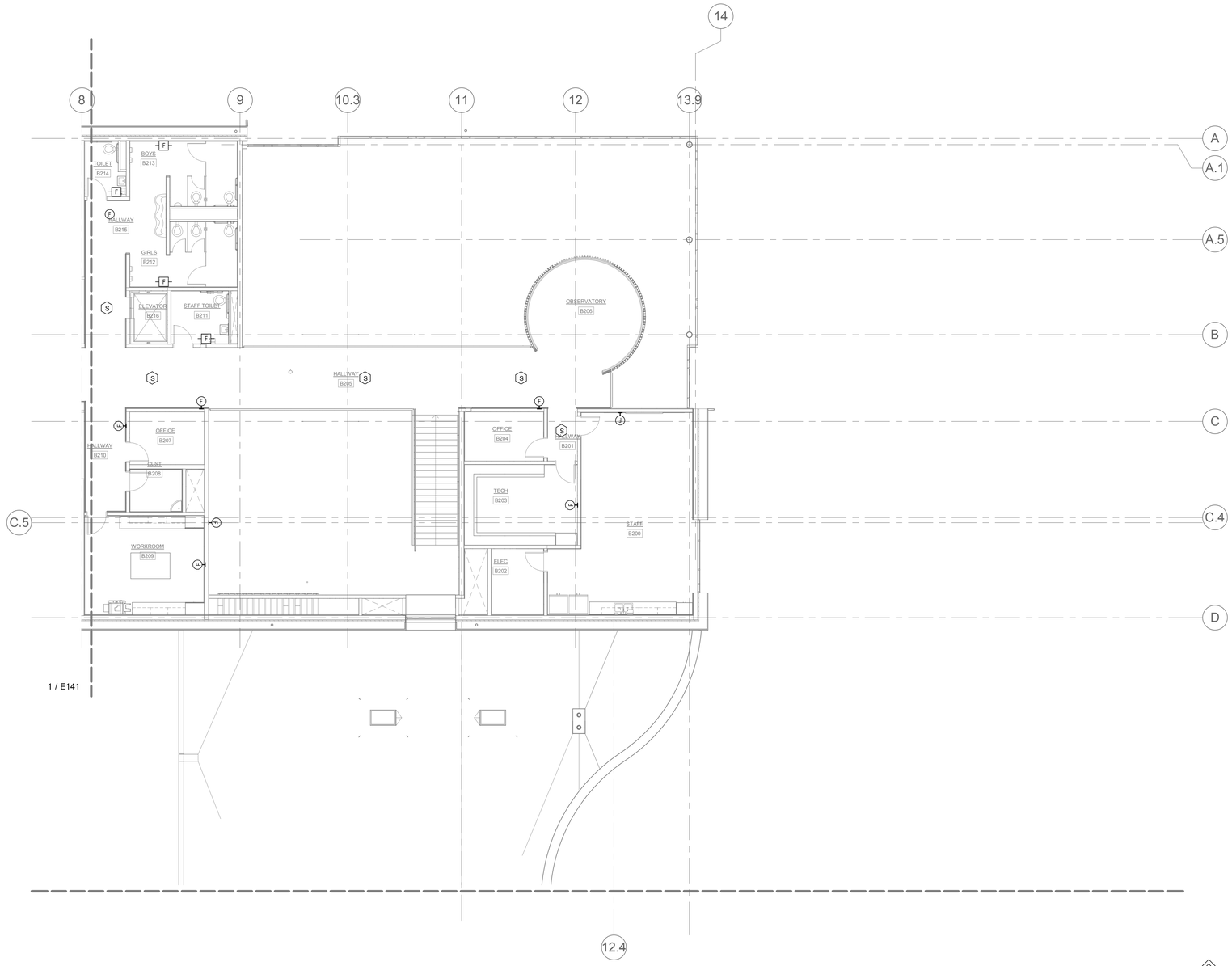

1 SECTOR B FIRE ALARM PLAN - SECOND FLOOR
1/8" = 1'-0"

GENERAL NOTES:

A. THE FIRE ALARM IS A CONTRACTOR DESIGN-BUILD SYSTEM ADDITIONAL DEVICES MAY BE REQUIRED TO COMPLY WITH CODE. CONTRACTOR SHALL PROVIDE ADDITIONAL FIRE ALARM DEVICES, ACCESSORIES AND ANY ADDITIONAL ITEMS REQUIRED FOR A COMPLETE AND OPERATIONAL CODE COMPLIANT SYSTEM. REFERENCE SPECIFICATION DIVISION 28 30 00 FOR ADDITIONAL INFORMATION.

B. IN ADDITION TO CODE MINIMUM FIRE ALARM COVERAGE THE CONTRACTOR SHALL PROVIDE SMOKE DETECTION SPOT COVERAGE IN CORRIDORS AND COMMON AREAS, AND MANUAL PULL STATIONS AT EXITS PER THE OWNERS DIRECTION.

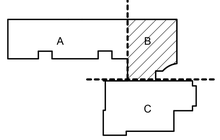

KEY PLAN

PIVOT ARCHITECTURE

REGISTERED PROFESSIONAL ENGINEER
16123
OREGON
JULY 15, 1987
STEPHEN J. TURNA
2.09.16
EXPIRES 6-30-16

IBI GROUP

dowa

PAE
Portland | San Francisco | Seattle
pae-engineers.com

BID SET
EUGENE SCHOOL DISTRICT 4J
120 WEST HILLIEARD AVENUE, EUGENE, OREGON 97404
RIVER ROAD / EL CAMINO DEL RIO ELEMENTARY SCHOOL

SECTOR B FIRE ALARM PLAN - SECOND FLOOR

PROJECT #	1337.00
ISSUE DATE:	2.12.2016
DRAWN:	SC
CHECKED:	PRC

REVISIONS

E143

PRINTED ON: 2/11/2016 4:10:25 PM FROM FILE: C:\Revit Local Files\13-1533 MEP15\13-1533 MEP15_karol.kluczynski.rvt

© 2014 PIVOT ARCHITECTURE

GENERAL NOTES:

A. ALL PENETRATION AND ROUTING PATHS OF EXPOSED CONDUIT SHALL BE COORDINATED AND REVIEWED BY ARCHITECT AND ENGINEER PRIOR TO INSTALLATION.

B. PROVIDE NO MORE THAT (6) CURRENT CARRYING CONDUCTORS PER HOMERUN.

C. CIRCUIT NUMBER SHOWN NEXT TO NORMAL LUMINAIRES SHALL BE CIRCUITED TO PANEL '41B1', UNLESS OTHERWISE NOTED.

D. PROVIDE CONNECTIONS TO EXIT SIGNS FROM THE NEAREST EMERGENCY CIRCUIT WITH AN UNSWITCHED LEG.

E. REFER TO 'TYPICAL LIGHTING CONTROLS AT COMMON SPACES AND CORRIDORS' DETAIL ON SHEET E501 FOR CORRIDOR CONTROL INFORMATION.

NOTES:

1. DAYLIGHT HARVEST ZONE AUTOMATIC DIMMING CONTROLLED BY PHOTO CELL IN ROOM. PROVIDE SWITCH CONTROL AS INDICATED.

2. DUAL-TECH OCCUPANCY SENSOR WITH AUXILIARY CONTACT FOR USE WITH HVAC.

3. PROVIDE SENTRY SWITCH(S) TO CONTROL ALL ZONES WITHIN ROOM AS INDICATED. (1) SWITCH PER ZONE.

4. DOWNLIGHT SHALL BE SUSPENDED TO MATCH (ACT) CEILING HEIGHT IN HALLWAY.

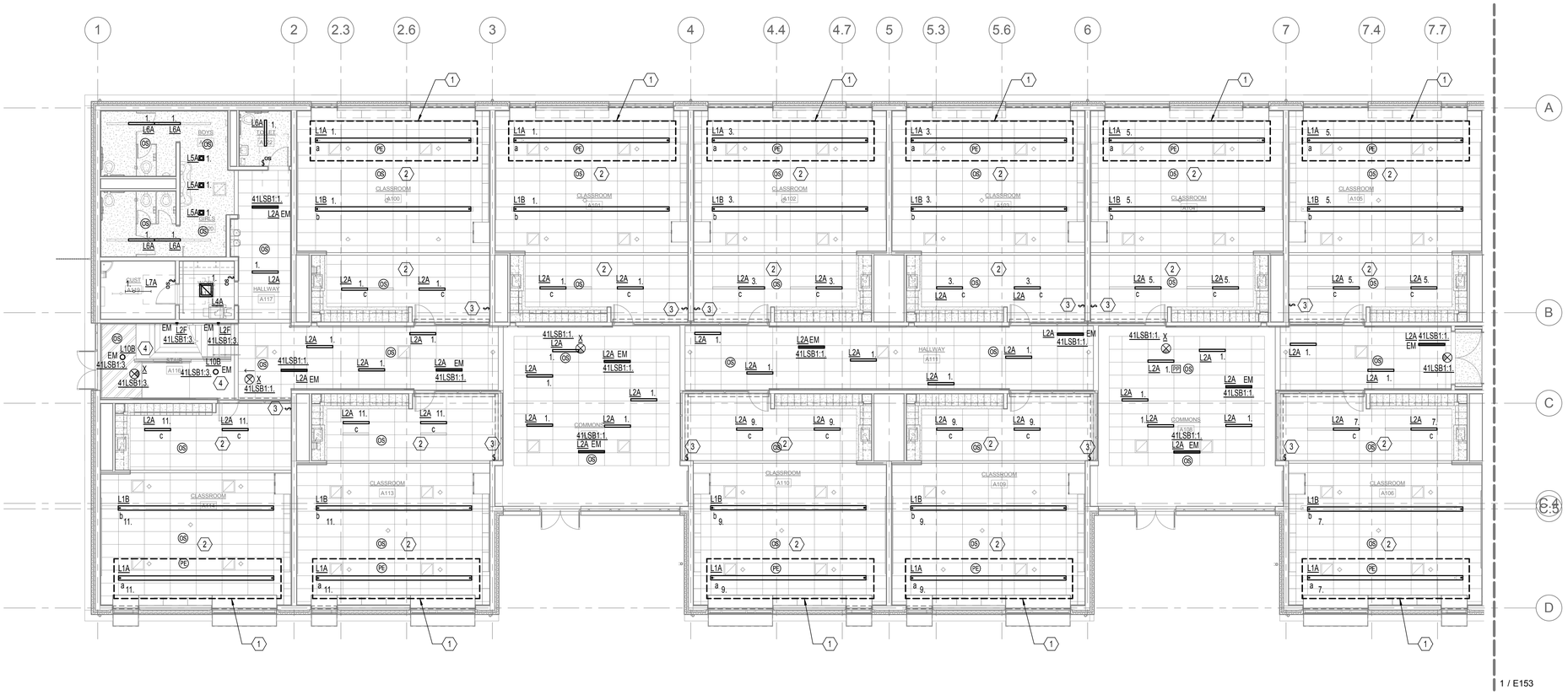

1 SECTOR A LIGHTING PLAN - FIRST FLOOR
1/8" = 1'-0"

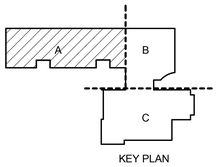

KEY PLAN

PIVOT ARCHITECTURE

REGISTERED PROFESSIONAL ENGINEER
STEPHEN J. JURINA
OREGON
EXPIRES 6-30-16

IBI GROUP

lowa

PAE
Portland | San Francisco | Seattle
pae-engineers.com

BID SET

EUGENE SCHOOL DISTRICT 4J
120 WEST HILLEARD AVENUE, EUGENE, OREGON 97404

RIVER ROAD / EL CAMINO DEL RIO ELEMENTARY SCHOOL

SECTOR A LIGHTING PLAN - FIRST FLOOR

PROJECT #	1337.00
ISSUE DATE:	2.12.2016
DRAWN:	SC
CHECKED:	PIC
REVISIONS	

E151

PRINTED ON: 2/11/2016 4:10:33 PM FROM FILE: C:\Revit Local Files\13-1533 MEP15\13-1533 MEP15_lanol.kliszczynski.rvt

© 2014 PIVOT ARCHITECTURE

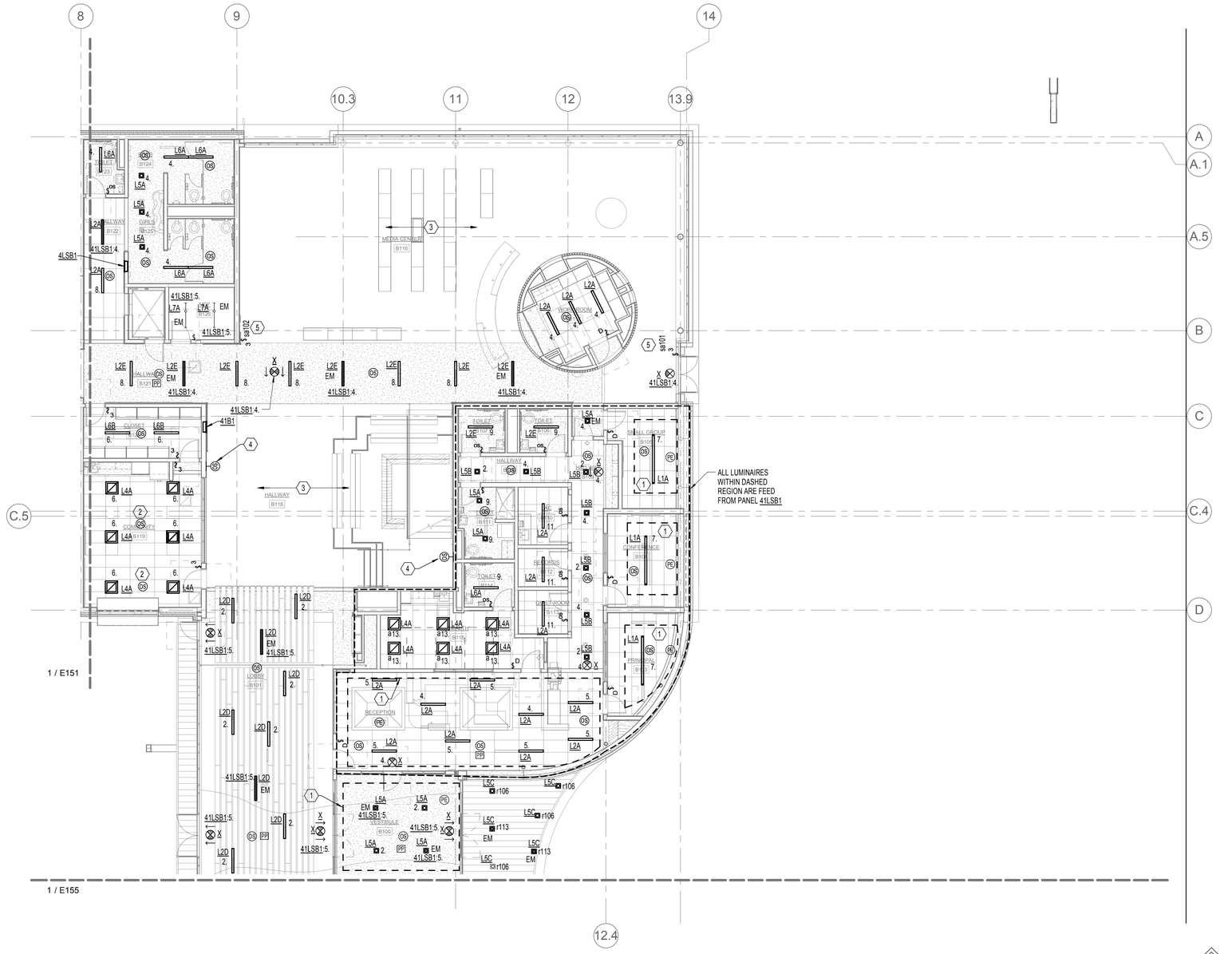

1 SECTOR B LIGHTING PLAN - FIRST FLOOR

1/8" = 1'-0"

GENERAL NOTES:

A. ALL PENETRATION AND ROUTING PATHS OF EXPOSED CONDUIT SHALL BE COORDINATED AND REVIEWED BY ARCHITECT AND ENGINEER PRIOR TO INSTALLATION.

B. PROVIDE NO MORE THAT (6) CURRENT CARRYING CONDUCTORS PER HOMERUN.

C. CIRCUIT NUMBER SHOWN NEXT TO NORMAL LUMINAIRES SHALL BE CIRCUITED TO PANEL '41B1', UNLESS OTHERWISE NOTED.

D. LUMINAIRES WITHIN 'STANDBY POWER' REGION WILL BE CIRCUITED TO PANEL '41LSB1', UNLESS OTHERWISE NOTED.

E. PROVIDE CONNECTIONS TO EXIT SIGNS FROM THE NEAREST EMERGENCY CIRCUIT WITH AN UNSWITCHED LEG.

F. REFER TO 'TYPICAL LIGHTING CONTROLS AT COMMON SPACES AND CORRIDORS' DETAIL ON SHEET E501 FOR CORRIDOR CONTROL INFORMATION.

G. REFER TO LIGHTING RELAY SCHEDULE ON SHEET E702 FOR ADDITIONAL INFORMATOIN.

NOTES:

1. DAY-LIGHT HARVEST ZONE, ALL FIXTURE WITHIN DASHED REGION TO BE CONTROLLED BY PHOTOELECTRIC SENSOR AS SHOWN.

2. DUAL-TECH OCCUPANCY SENSOR WITH AUXILIARY CONTACT FOR USE WITH HVAC.

3. LIGHTING IN THIS AREA IS SHOWN ON ABOVE CEILING PLAN.

4. OCCUPANCY SENSOR CONTROLLING LUMINAIRES IN HALLWAY B118 SHOWN ON SHEET E163.

5. OVERRIDE LV SWITCH FOR MEDIA CENTER.

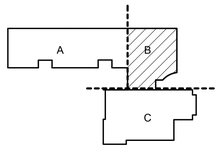

KEY PLAN

PIVOT ARCHITECTURE

REGISTERED PROFESSIONAL ENGINEER
STEPHEN J. TURNA
OREGON
JULY 16, 1987
EXPIRES 6-30-16

IBI GROUP

PAE
Portland | San Francisco | Seattle
pae-engineers.com

BID SET

4J
EUGENE SCHOOL DISTRICT 4J
120 WEST HILLEARD AVENUE, EUGENE, OREGON 97404

RIVER ROAD / EL CAMINO DEL RIO ELEMENTARY SCHOOL

SECTOR B LIGHTING PLAN - FIRST FLOOR

PROJECT #	1337.00
ISSUE DATE:	2.12.2016
DRAWN:	SC
CHECKED:	PSC

REVISIONS

E153

PRINTED ON: 2/11/2016 4:10:42 PM FROM FILE: C:\Revit Local Files\13-1533 MEP15\13-1533 MEP15_karol.kliczynski.rvt

© 2014 PIVOT ARCHITECTURE

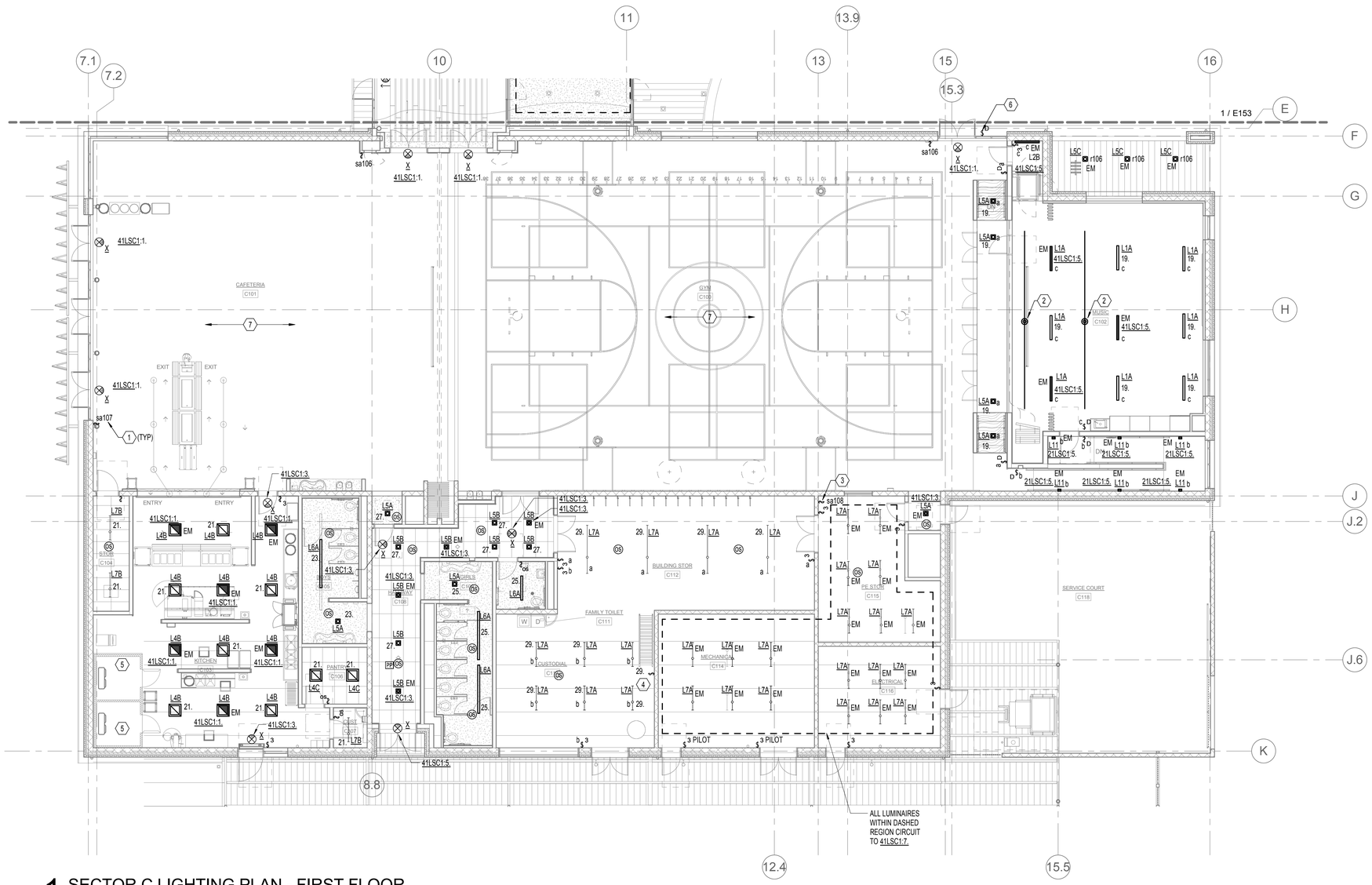

1 SECTOR C LIGHTING PLAN - FIRST FLOOR
1/8" = 1'-0"

GENERAL NOTES:

A. ALL PENETRATION AND ROUTING PATHS OF EXPOSED CONDUIT SHALL BE COORDINATED AND REVIEWED BY ARCHITECT AND ENGINEER PRIOR TO INSTALLATION.

B. PROVIDE NO MORE THAT (6) CURRENT CARRYING CONDUCTORS PER HOMERUN.

C. CIRCUIT NUMBER SHOWN NEXT TO NORMAL LUMINAIRES SHALL BE CIRCUITED TO PANEL '41C1', UNLESS OTHERWISE NOTED.

D. PROVIDE CONNECTIONS TO EXIT SIGNS FROM THE NEAREST EMERGENCY CIRCUIT WITH AN UNSWITCHED LEG.

E. CONCEAL CONDUIT AND RECESS DEVICES IN CMU WALLS IN GYM, CAFETERIA, RAMP, MUSIC, KITCHEN, RESTROOMS AND PUBLIC SPACES. CONDUIT AND DEVICES MAY BE SURFACE MOUNTED ON CMU WALLS IN OTHER SPACES.

F. REFER TO '4J LIGHTING CONTROL INTERFACE' DETAIL ON SHEET E502 FOR SITE MUSIC ROOM, AND CONTROL INFORMATION.

NOTES:

1. NLIGHT CONTROL SWITCH TAG, REFER TO SHEET E702 FOR ADDITIONAL INFORMATION.

2. THEATRICAL PIPE RACK. REFER TO POWER PLAN FOR RECEPTACLE REQUIREMENTS. PROVIDE UNISTRUT TO SUPPORT RACK.

3. TIMER OVERRIDE SWITCH FOR OUTSIDE PLAY AREA.

4. SWITCH TO CONTROL MECHANICAL PLATFORM LIGHTING AT TOP OF STAIRS.

5. LIGHTING INTEGRAL TO COOLER/FREEZER.

6. PROVIDE LOCKABLE BOX FOR DIMMER SWITCH.

7. LIGHTING IN THIS AREA IS SHOWN ON 2ND LEVEL CEILING PLAN.

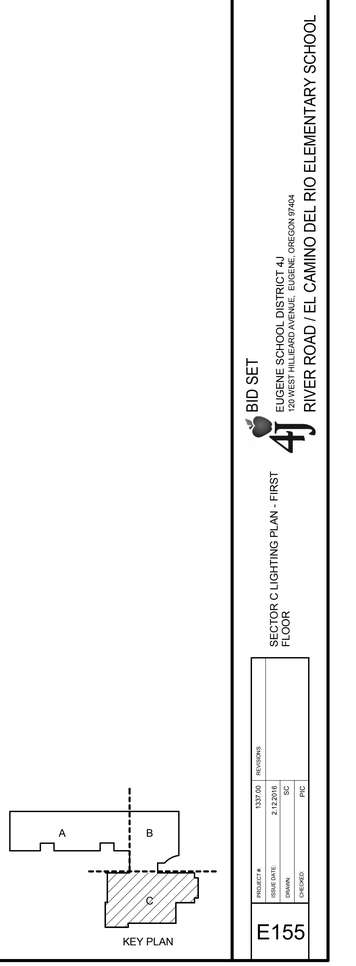

KEY PLAN

PIVOT ARCHITECTURE

REGISTERED PROFESSIONAL ENGINEER
STEPHEN J. TURNA
OREGON
JULY 16, 1987
2.09.16
EXPIRES 6-30-16

IBI GROUP

Iowa

PAE
Portland | San Francisco | Seattle
pae-engineers.com

BID SET
4J
EUGENE SCHOOL DISTRICT 4-J
120 WEST HILLEARD AVENUE, EUGENE, OREGON 97404
RIVER ROAD / EL CAMINO DEL RIO ELEMENTARY SCHOOL

SECTOR C LIGHTING PLAN - FIRST FLOOR

PROJECT #:	1337.00
ISSUE DATE:	2.12.2016
DRAWN:	SC
CHECKED:	PIC
REVISIONS:	

E155

PRINTED ON: 2/11/2016 4:10:52 PM FROM FILE: C:\Revit Local Files\13-1533 MEP15\13-1533 MEP15_sand.kluczynski.rvt

© 2014 PIVOT ARCHITECTURE

GENERAL NOTES:

A. ALL PENETRATION AND ROUTING PATHS OF EXPOSED CONDUIT SHALL BE COORDINATED AND REVIEWED BY ARCHITECT AND ENGINEER PRIOR TO INSTALLATION.

B. PROVIDE NO MORE THAT (6) CURRENT CARRYING CONDUCTORS PER HOMERUN.

C. CIRCUIT NUMBER SHOWN NEXT TO NORMAL LUMINAIRES SHALL BE CIRCUITED TO PANEL '42B1', UNLESS OTHERWISE NOTED.

D. PROVIDE CONNECTIONS TO EXIT SIGNS FROM THE NEAREST EMERGENCY CIRCUIT WITH AN UNSWITCHED LEG.

E. REFER 'TO TYPICAL LIGHTING CONTROLS AT COMMON SPACES AND CORRIDORS' DETAIL ON SHEET E501 FOR CORRIDOR CONTROL INFORMATION.

NOTES:

1. DAYLIGHT HARVEST ZONE.AUTOMATIC DIMMING CONTROLLED BY PHOTO CELL IN ROOM. PROVIDE SWITCH CONTROL AS INDICATED.

2. DUAL-TECH OCCUPANCY SENSOR WITH AUXILIARY CONTACT FOR USE WITH HVAC.

3. PROVIDE SENTRY SWITCH(S) TO CONTROL ALL ZONES WITHIN ROOM AS INDICATED. (1) SWITCH PER ZONE.

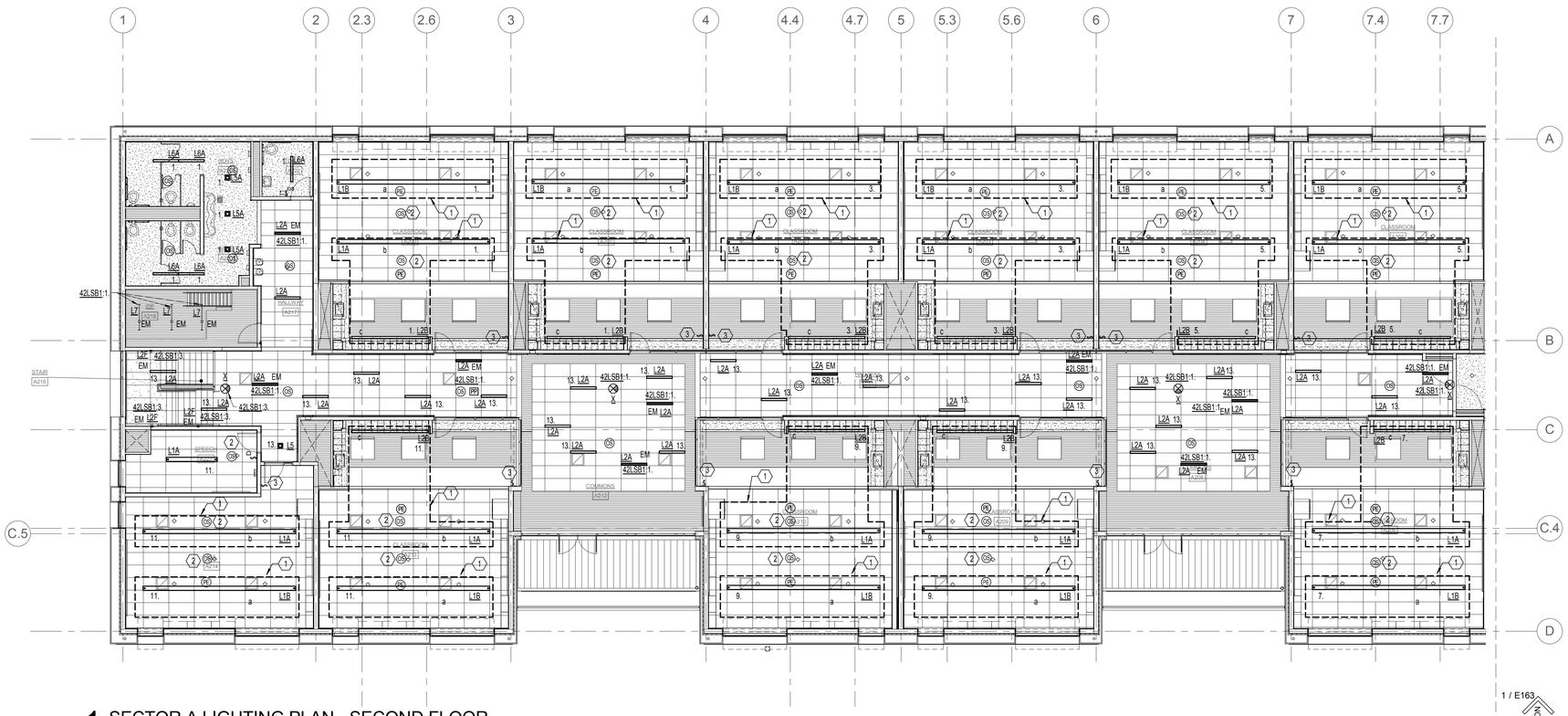

1 SECTOR A LIGHTING PLAN - SECOND FLOOR
1/8" = 1'-0"

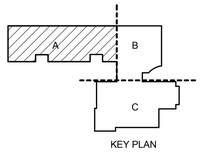

KEY PLAN

PIVOT ARCHITECTURE

REGISTERED PROFESSIONAL ENGINEER
11612
OREGON
STEPHEN J. TURNA
EXPIRES 6-30-16

IBI GROUP

dowa

PAE
Portland | San Francisco | Seattle
pae-engineers.com

BID SET

4J EUGENE SCHOOL DISTRICT 4-J
200 WEST FRANKLIN AVENUE, EUGENE, OREGON 97404
RIVER ROAD / EL CAMINO DEL RIO ELEMENTARY SCHOOL

SECTOR A LIGHTING PLAN - SECOND FLOOR

PROJECT #	1337.00
ISSUE DATE:	2.12.2016
DRAWN:	SC
CHECKED:	PIC

REVISIONS:

E161

PRINTED ON: 2/15/2016 9:09:10 AM FROM FILE: C:\Revit Local Files\13-1533 MEP15\13-1533 MEP15_Khem.Mai.rvt

© 2014 PIVOT ARCHITECTURE

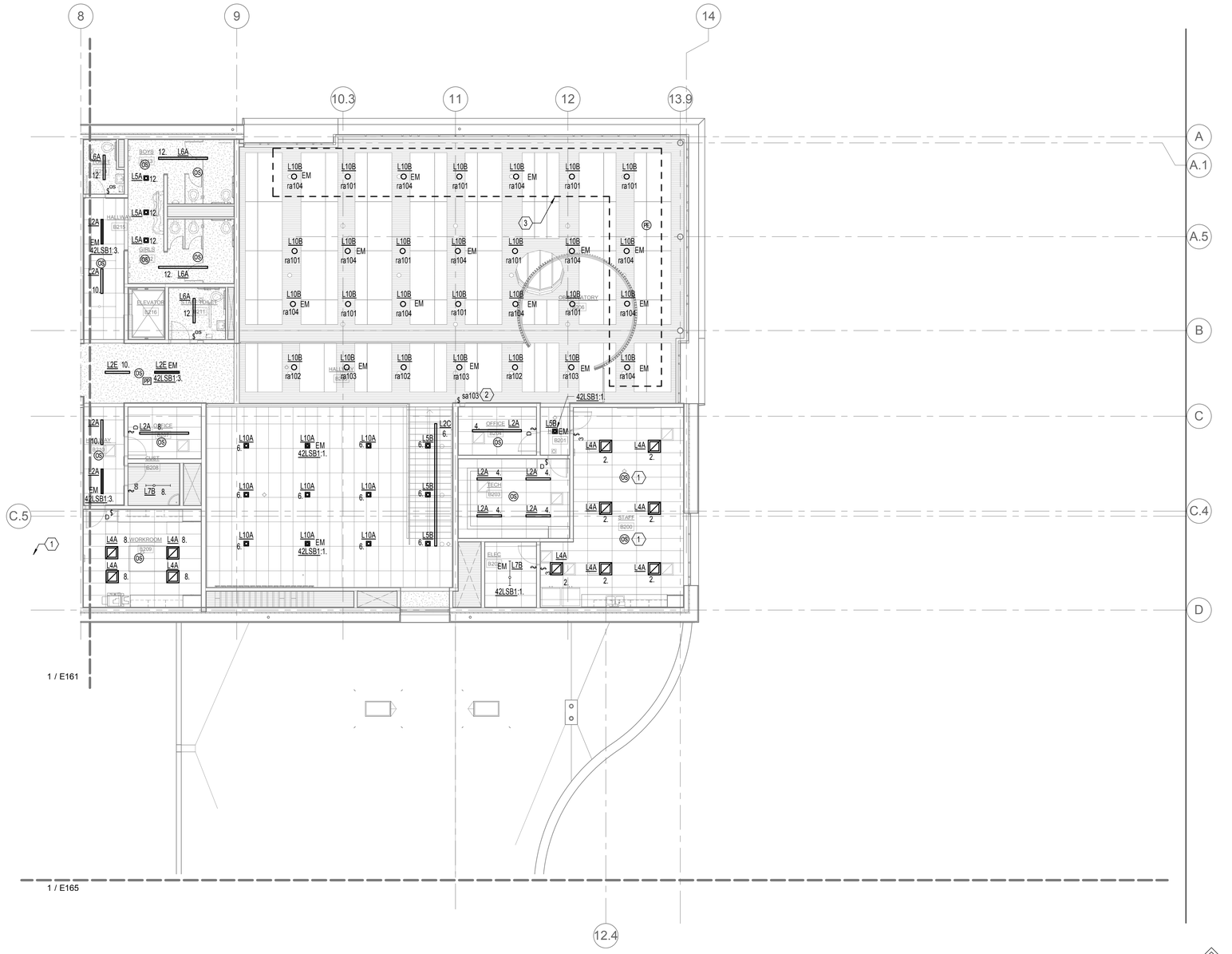

1 SECTOR B LIGHTING PLAN - SECOND FLOOR

1/8" = 1'-0"

GENERAL NOTES:

A. ALL PENETRATION AND ROUTING PATHS OF EXPOSED CONDUIT SHALL BE COORDINATED AND REVIEWED BY ARCHITECT AND ENGINEER PRIOR TO INSTALLATION.

B. PROVIDE NO MORE THAT (6) CURRENT CARRYING CONDUCTORS PER HOMERUN.

C. CIRCUIT NUMBER SHOWN NEXT TO NORMAL LUMINAIRES SHALL BE CIRCUITED TO PANEL '42B1', UNLESS OTHERWISE NOTED.

D. PROVIDE CONNECTIONS TO EXIT SIGNS FROM THE NEAREST EMERGENCY CIRCUIT WITH AN UNSWITCHED LEG.

E. REFER TO "LIGHTING RELAY SCHEDULE" ON SHEET E702 FOR ADDITIONAL INFORMATION.

NOTES:

1. DUAL-TECH OCCUPANCY SENSOR WITH AUXILIARY CONTACT FOR USE WITH HVAC.

2. OVERRIDE LV SWITCH FOR MEDIA CENTER.

3. DAYLIGHT HARVEST ZONE.

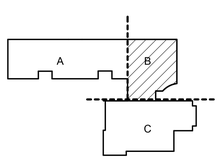

KEY PLAN

PIVOT ARCHITECTURE

REGISTERED PROFESSIONAL ENGINEER
16612
OREGON
JULY 15, 1987
STEPHEN J. TURNAK
2.09.16
EXPIRES: 6-30-16

IBI GROUP

PAE
Portland | San Francisco | Seattle
pae-engineers.com

BID SET

EUGENE SCHOOL DISTRICT 4J
120 WEST HILLIEARD AVENUE, EUGENE, OREGON 97404

RIVER ROAD / EL CAMINO DEL RIO ELEMENTARY SCHOOL

SECTOR B LIGHTING PLAN - SECOND FLOOR

PROJECT #	1337.00
ISSUE DATE:	2.12.2016
DRAWN:	SC
CHECKED:	PRC

REVISIONS

E163

PRINTED ON: 2/11/2016 4:11:08 PM FROM FILE: C:\Revit Local Files\13-1533 MEP15\13-1533 MEP15_karol.kluczynski.rvt

© 2014 PIVOT ARCHITECTURE

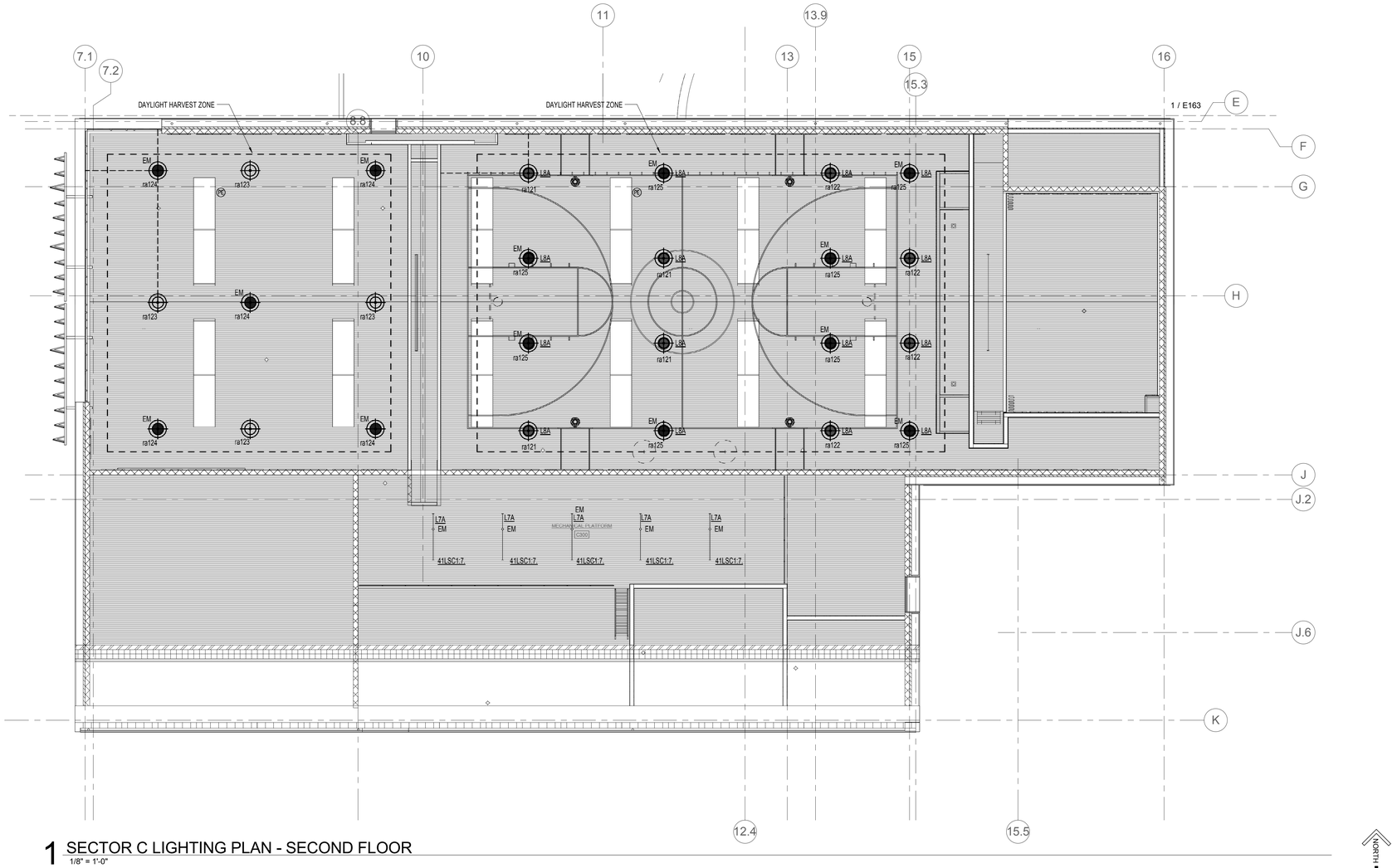

1 SECTOR C LIGHTING PLAN - SECOND FLOOR
1/8" = 1'-0"

GENERAL NOTES:

A. ALL PENETRATION AND ROUTING PATHS OF EXPOSED CONDUIT SHALL BE COORDINATED AND REVIEWED BY ARCHITECT AND ENGINEER PRIOR TO INSTALLATION.

B. PROVIDE NO MORE THAT (6) CURRENT CARRYING CONDUCTORS PER HOMERUN.

C. CONCEAL CONDUIT AND RECESS DEVICES IN CMU WALLS IN GYM, CAFETERIA, RAMP, MUSIC, KITCHEN, RESTROOMS AND PUBLIC SPACES. CONDUIT AND DEVICES MAY BE SURFACE MOUNTED ON CMU WALLS IN OTHER SPACES.

D. REFER TO '4J LIGHTING CONTROL INTERFACE' DETAIL ON SHEET E501 FOR SITE MUSIC ROOM, AND CONTROL INFORMATION.

E. REFER TO "LIGHTING RELAY SCHEDULE" ON SHEET E702 FOR ADDITIONAL INFORMATION.

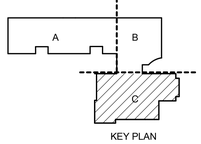

KEY PLAN

PIVOT ARCHITECTURE

REGISTERED PROFESSIONAL ENGINEER
11612
OREGON
JAN 18, 1983
STEPHEN J. TURNA
2-09-16
EXPIRES 6-30-16

IBI GROUP

dowa

PAE
Portland | San Francisco | Seattle
pae-engineers.com

BID SET

4J
EUGENE SCHOOL DISTRICT 4J
200 WEST HILYARD AVENUE, EUGENE, OREGON 97404

RIVER ROAD / EL CAMINO DEL RIO ELEMENTARY SCHOOL

SECTOR C LIGHTING PLAN - SECOND FLOOR

PROJECT #	1337.00
ISSUE DATE:	2.12.2016
DRAWN:	SC
CHECKED:	PKC

REVISIONS:

E165

PRINTED ON: 2/15/2016 9:09:17 AM FROM FILE: C:\Revit Local Files\13-1533 MEP15\13-1533 MEP15_Khem.Mai.rvt

© 2014 PIVOT ARCHITECTURE

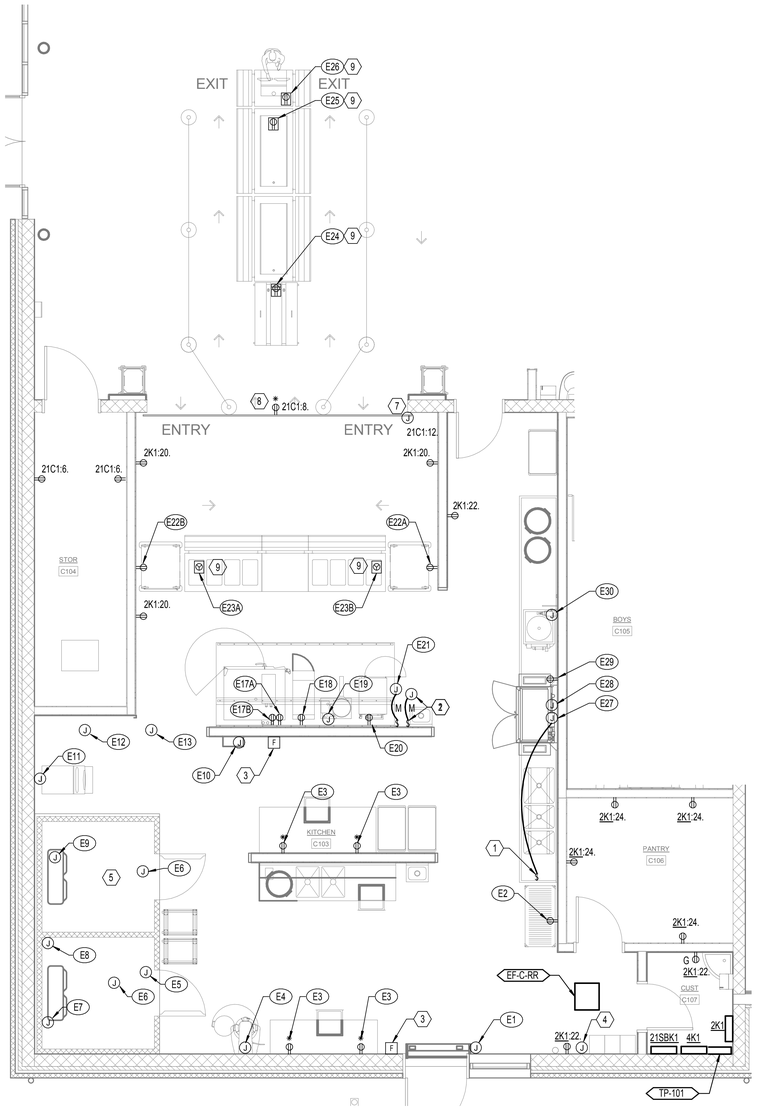

1 ENLARGED PLAN - KITCHEN - POWER

1/4" = 1'-0"

NORTH

GENERAL NOTES:

A. AREA ABOVE ALL ELECTRICAL PANELS AND SWITCH BOARDS SHALL BE KEPT CLEAR OF ALL EQUIPMENT FOREIGN TO THE ELECTRICAL INSTALLATION INCLUDING PIPING, DUCTWORK, SUPPORTS, ETC. COORDINATE INSTALLATION WITH ALL OTHER TRADES.

B. ALL PENETRATIONS AND ROUTING PATHS OF EXPOSED CONDUIT SHALL BE COORDINATED AND REVIEWED BY ARCHITECT AND ENGINEER PRIOR TO INSTALLATION.

C. PROVIDE SEPARATE NEUTRAL CONDUCTOR FOR EACH BRANCH CIRCUIT, SHARED NEUTRALS ARE NOT PERMITTED.

D. PROVIDE NO MORE THAN (6) CURRENT CARRYING CONDUCTORS PER HOMERUN.

E. VERIFY ALL EQUIPMENT ELECTRICAL INFORMATION AND ROUGH-IN LOCATIONS WITH FOOD SERVICE SHOP DRAWINGS AND APPROVED FOOD SERVICE MANUFACTURER'S SPECIFICATION SHEETS PRIOR TO INSTALLATION.

F. ALL RECEPTACLES WITHIN KITCHEN AREA SHALL BE GFCI TYPE PER NEC.

NOTES:

1. LIMIT SWITCH FOR WAREWASHER. INTERCONNECT SWITCH AND WAREWASHER.

2. PROVIDE SWITCH AND POWER CONNECTION TO EXHAUST FAN ON ROOF AND INTERLOCK WITH MAKE-UP AIR SUPPLY UNIT.

3. PROVIDE MANUAL FIRE SUPPRESSION PULL STATION WITH EMPTY CONDUIT TO FIRE SUPPRESSION CONTROL HEAD .

4. CONTROLLER TO MONITOR WALK-IN EVAPORATORS AND CONDENSING UNITS. PROVIDE RACEWAY PER KITCHEN CONSULTANT REQUIREMENTS.

5. AIR COOLED CONDENSING UNITS TO BE SET ON ROOF. PROVIDE SMART CONTROLLER WITH LOW VOLTAGE WIRING TO UNIT. COORDINATE EXACT LOCATION AND ADDITIONAL REQUIREMENTS WITH ARCHITECT.

6. NOTE NOT USED.

7. MOTORIZED COOLING DOOR CONNECTION. COORDINATE EXACT LOCATION WITH ARCHITECTURAL DRAWINGS. CONNECT DOOR CONTROL AND SWITCH PER MANUFACTURER REQUIREMENTS.

8. RECEPTACLE FOR LCD DISPLAY COORDINATE EXACT LOCATION WITH ARCHITECT.

9. PROVIDE ALL CONNECTIONS REQUIRED IN FLOORBOX AS INDICATED FOR EQUIPMENT TO BE FED FROM FLOORBOX.

KITCHEN EQUIPMENT CONNECTION SCHEDULE

EQUIPMENT DESCRIPTIONS		ELECTRICAL CHARACTERISTICS					FEEDER CHARACTERISTICS				PANEL INFORMATION		NOTES
TAG	DESCRIPTION	LOAD (KW)	LOAD (AMPS)	VOLTS	PHASE	CONNECTION TYPE	CONDUIT	PHASE CONDUCTORS	GROUND CONDUCTORS	OCP	PANEL	CIRCUIT	
E1	AIR CURTAIN		1.7	208	1	HARDWIRE	3/4"	2#12	1#12	20/2	2K1	1,3	
E2	CONVENIENCE	1.44		120	1	NEMA 5-20	3/4"	2#12	1#12	20/1	2K1	5	
E3	CONVENIENCE	1.44		120	1	NEMA 5-20	3/4"	2#12	1#12	20/1	2K1	7	
E4	30-QUART MIXER		2.8	208	3	HARDWIRE	3/4"	3#12	1#12	20/3	2K1	9,11,13	
E5	WALK-IN DOOR HEATER	0.50		120	1	HARDWIRE	3/4"	2#12	1#12	20/1	21SBK1	1	
E6	(2) WALK-IN LIGHTS	0.32		120	1	HARDWIRE	3/4"	2#12	1#12	20/1	21SBK1	3	
E7	WALK-IN FREEZER EVAPORATOR		8.8	208	1	HARDWIRE	3/4"	2#12	1#12	20/2	21SBK1	5,7	
E8	WALK-IN DRAIN LINE HEATER	0.50		120	1	HARDWIRE	3/4"	2#12	1#12	20/1	21SBK1	2	
E9	WALK-IN COOLER EVAPORTATOR		2.0	120	1	HARDWIRE	3/4"	2#12	1#12	20/1	21SBK1	4	
E10	FIRE PROTECTION SYSTEM	1.00		120	1	HARDWIRE	3/4"	2#12	1#12	20/1	2K1	15	
E11	CUBE ICE MACHINE		11.5	120	1	HARDWIRE	3/4"	2#12	1#12	20/1	2K1	17	
E12	WALK-IN COOLER CONDENSING UNIT		7.6	208	1	HARDWIRE	3/4"	2#12	1#12	20/2	21SBK1	6,8	
E13	WALK-IN FREEZER CONDENSING UNIT		7.5	208	3	HARDWIRE	3/4"	3#12	1#12	20/3	21SBK1	10,12,14	
E17A	DOUBLE STACK COMBI-OVEN STEAMERS		5.3	120	1	NEMA 5-20	3/4"	2#12	1#12	20/1	2K1	33	
E17B	DOUBLE STACK COMBI-OVEN STEAMERS		5.3	120	1	NEMA 5-20	3/4"	2#12	1#12	20/1	2K1	35	
E18	BOIL TOP RANGE		3.4	120	1	NEMA 5-20	3/4"	2#12	1#12	20/1	2KA	37	
E19	20-GALLON TILTING KETTLE		18.0	208	3	HARDWIRE	1"	3#10	1#10	25/3	2K1	19,21,23	
E20	CONVENCTION STEAMER		14.0	120	1	NEMA 5-20R	3/4"	2#12	1#12	20/1	2K1	39	
E21	(2) CANOPY HOOD LIGHTS	0.16		120	1	HARDWIRE	3/4"	2#12	1#12	20/1	2K1	25	
E22A	MOBILE HEATED/PROOFING CABINET		12.0	120	1	NEMA 5-20R	3/4"	2#12	1#12	20/1	2K1	27	
E22B	MOBILE HEATED/PROOFING CABINET		12.0	120	1	NEMA 5-20R	3/4"	2#12	1#12	20/1	2K1	41	
E23A	HOT FOOD SERVING STATION	3.275		208	1	NEMA PLUG	1"	2#10	1#10	20/2	2K1	29,31	
E23B	HOT FOOD SERVING STATION	3.275		208	1	NEMA PLUG	1"	2#10	1#10	20/2	2K1	26,28	
E24	DOUBLE-SIDED MILK COOLER		14.3	120	1	NEMA 5-20R	3/4"	2#12	1#12	20/1	2K1	2	
E25	MOBILE DOUBLE-SIDED FRUIT/VEGIE BAR		7.5	120	1	NEMA 5-20R	3/4"	2#12	1#12	20/1	2K1	4	
E26	POINT OF SALE SYSTEM	1.00		120	1	NEMA 5-20R	3/4"	2#12	1#12	20/1	2K1	6	2
E27	WASTE COLLECTOR		3.2	208	3	HARDWIRE	3/4"	3#12	1#12	20/3	2K1	8,10,12	
E28	WAREWASHER (TANK HEAT/MOTORS)		1.5	480	3	HARDWIRE	3/4"	3#12	1#12	20/3	4K1	1,3,5	1
E29	WAREWASHER BOOSTER HEATER	30.00		480	3	HARDWIRE	1-1/2"	3#6	1#8	50/3	4K1	7,9,11	
E30	WAREWASHER DETERGENT FEED	1.44		120	1	HARDWIRE	3/4"	2#12	1#12	20/1	2K1	14	

A. REFER TO THE KITCHEN CONSULTANT DOCUMENTS FOR FURTHER DETAILS, NOTES AND ELECTRICAL INSTALLATION INSTRUCTIONS.
B. ALL RECEPTACLES WITHIN THE KITCHEN AREA SHALL BE GFCI TYPE PER NEC.
C. FOR EACH PIECE OF HARDWIRED EQUIPMENT, PROVIDE SUITABLE DISCONNECTING MEANS IN ACCESSIBLE, CONCEALED SEPARATE LOCATION
D. COORDINATE NEMA PLUG TYPE WITH KITCHEN CONSULTANT.

NOTES:

1. PROVIDE CONTROLS INTERLOCK CONNECTION BETWEEN THE DISHWASHER CONTROL PANEL AND THE HOOD EXHAUST FAN STARTER AS RECOMMENDED BY THE DISHWASHER MANUFACTURER WITHIN LINE OF SIGHT OF EQUIPMENT. DISCONNECT MAY BE OMITTED IF EQUIPMENT HAS SUITABLE INTEGRAL DISCONNECTING MEANS.
2. PROVIDE TWO DATA DROPS WITHIN FLOORBOX, COORDINATE ADDITIONAL INFORMATION WITH IT DRAWINGS.

2 KITCHEN EQUIPMENT SCHEDULE

NONE

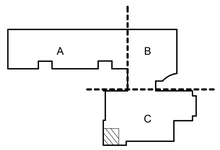

KEY PLAN

PIVOT ARCHITECTURE

REGISTERED PROFESSIONAL ENGINEER 11612 OREGON JULY 15, 1987 STEPHEN J. TURNAK 02.09.16 EXPIRES: 6-30-16

IBI GROUP

Iowa

PAE Portland | San Francisco | Seattle pae-engineers.com

BID SET

4J EUGENE SCHOOL DISTRICT 4J
120 WEST HILLEARD AVENUE, EUGENE, OREGON 97404

RIVER ROAD / EL CAMINO DEL RIO ELEMENTARY SCHOOL

ENLARGED PLAN - KITCHEN - ELECTRICAL

PROJECT #:	1337.00
ISSUE DATE:	2.12.2016
DRAWN:	SC
CHECKED:	PIC
REVISIONS:	

E181

PRINTED ON: 2/11/2016 4:11:19 PM FROM FILE: C:\Revit Local Files\13-1533 MEP15\13-1533 MEP15_sanol.kluczynski.rvt

© 2014 PIVOT ARCHITECTURE

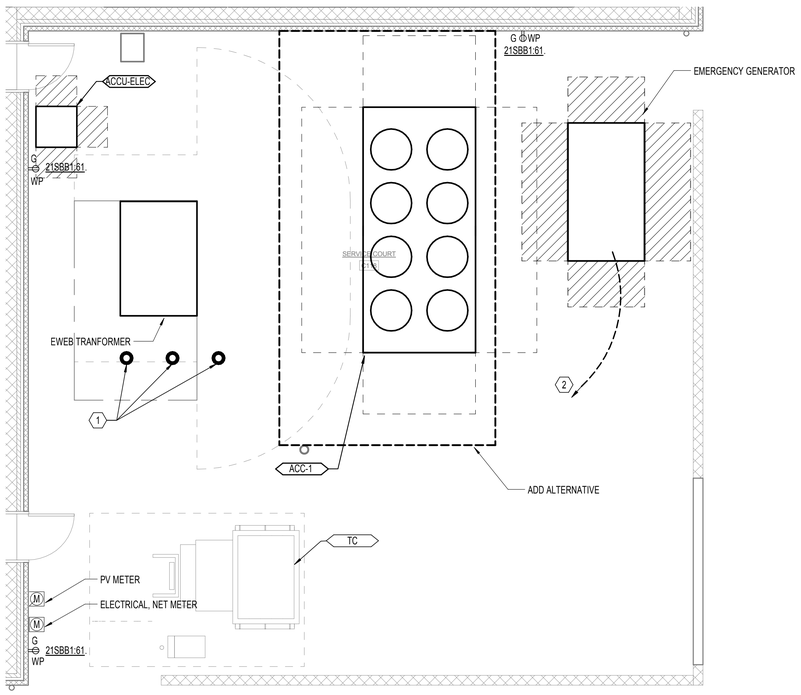

1 ENLARGED PLAN - YARD
1/4" = 1'-0"

NORTH

GENERAL NOTES:

A. AREA ABOVE ALL ELECTRICAL PANELS AND SWITCH BOARDS SHALL BE KEPT CLEAR OF ALL EQUIPMENT FOREIGN TO THE ELECTRICAL INSTALLATION INCLUDING PIPING, DUCTWORK, SUPPORTS, ETC. COORDINATE INSTALLATION WITH ALL OTHER TRADES.

B. ALL PENETRATIONS AND ROUTING PATHS OF EXPOSED CONDUITS SHALL BE COORDINATED AND REVIEWED BY ARCHITECT AND ENGINEER PRIOR TO INSTALLATION.

C. PROVIDE SEPARATE NEUTRALS CONDUCTOR FOR EACH BRANCH CIRCUIT, SHARED NEUTRALS ARE NOT PERMITTED.

D. PROVIDE NO MORE THAN (6) CURRENT CARRYING CONDUCTOR PER HOMERUN.

E. REFER TO ONE-LINE DIAGRAM ON SHEET E601 FOR FEEDER SCHEDULE AND ADDITIONAL REQUIREMENTS. ALL EQUIPMENTS FEEDERS IN COURTYARD SHALL BE UNDERGROUND UNLESS OTHERWISE NOTED.

NOTES:

1. PROVIDE EWEB BOLLARDS PER EWEB REQUIREMENTS.

2. PROVIDE CONNECTION TO GENERATOR BATTERY CHARGING, LIGHT, RCPT AND CONTROL. PROVIDE (2) 3/4" CONDUIT FROM ELECTRICAL ROOM C116. PROVIDE 8#12 CU, 4#12 CU GRD BACK TO PANEL 21SBC1 IN MAIN ELECTRICAL ROOM C116. PROVIDE NO MORE THAN (6) CURRENT CARRYING CONDUCTORS PER HOMERUN.

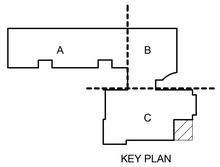

KEY PLAN

PIVOT ARCHITECTURE

REGISTERED PROFESSIONAL ENGINEER
11612
OREGON
JULY 15, 1987
STEPHEN J. TURNAK
2.09.16
EXPIRES: 6-30-16

IBI GROUP

Iowa

PAE
Portland | San Francisco | Seattle
pae-engineers.com

BID SET
4J
EUGENE SCHOOL DISTRICT 4J
120 WEST HILLEARD AVENUE, EUGENE, OREGON 97404
RIVER ROAD / EL CAMINO DEL RIO ELEMENTARY SCHOOL

PARTIAL ELECTRICAL PLAN - SERVICE COURT

PROJECT #	1337.00
ISSUE DATE:	2.12.2016
DRAWN:	SC
CHECKED:	PSC

REVISIONS

E411

PRINTED ON: 2/11/2016 4:11:21 PM FROM FILE: C:\Revit Local Files\13-1533 MEP15\13-1533 MEP15_karol.kluczynski.rvt

© 2014 PIVOT ARCHITECTURE

GENERAL NOTES:

A. COORDINATE INSTALLATION OF LUMINAIRES WITH DUCTWORK AND EQUIPMENT.

B. AREA ABOVE ALL ELECTRICAL PANELS AND SWITCH BOARDS SHALL BE KEPT CLEAR OF ALL EQUIPMENT FOREIGN TO THE ELECTRICAL INSTALLATION INCLUDING PIPING, DUCTWORK, SUPPORTS, ETC. COORDINATE INSTALLATION WITH ALL OTHER TRADES.

C. ALL PENETRATIONS AND ROUTING PATHS OF EXPOSED CONDUIT SHALL BE COORDINATED AND REVIEWED BY ARCHITECT AND ENGINEER PRIOR TO INSTALLATION.

D. PROVIDE SEPARATE NEUTRAL CONDUCTOR FOR EACH BRANCH CIRCUIT, SHARED NEUTRALS ARE NOT PERMITTED.

E. PROVIDE NO MORE THAN (6) CURRENT CARRYING CONDUCTORS PER HOMERUN.

F. ALL LUMINAIRES SHOWN SHALL BE CIRCUIT TO 42LSB1:4.

G. ALL BRANCH CIRCUITING SHALL BE #10 AWG, UNLESS OTHERWISE NOTED.

NOTES:

1. PILOT SWITCH TO CONTROL ALL L7 LUMINAIRES IN MECHANICAL LOFT.

2. PROVIDE BOTH NORMAL AND OPTIONAL STANDBY POWER CONNECTIONS TO DDC PANEL. COORDINATE EXACT LOCATION WITH ARCHITECT.

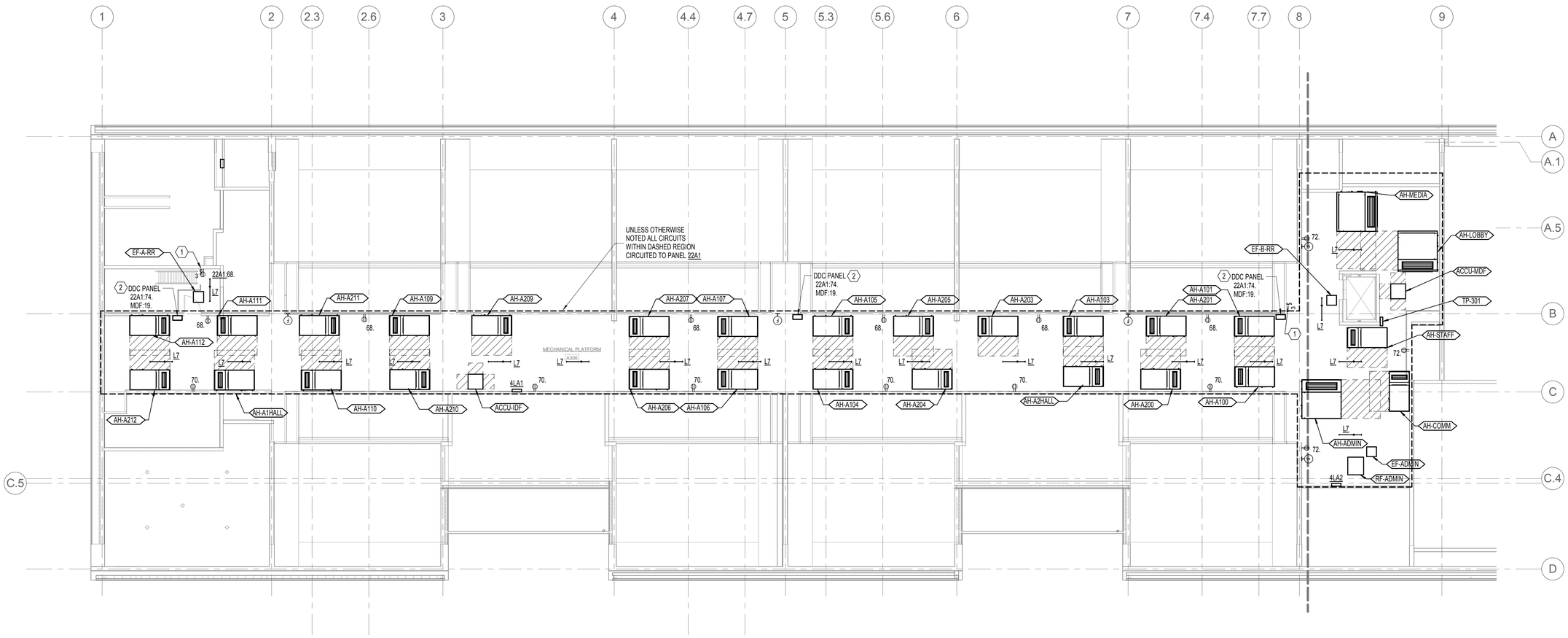

1 SECTOR A ELECTRICAL PLAN - MECH LOFT
1/8" = 1'-0"

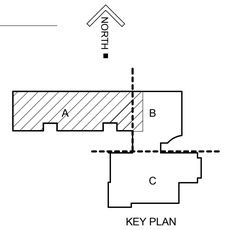

KEY PLAN

PIVOT ARCHITECTURE

REGISTERED PROFESSIONAL ENGINEER
16612
OREGON
JULY 15, 1987
STEPHEN J. TURNAK
12.09.16
EXPIRES 6-30-16

IBI GROUP

PAE
Portland | San Francisco | Seattle
pae-engineers.com

BID SET
EUGENE SCHOOL DISTRICT 4J
120 WEST HILLYARD AVENUE, EUGENE, OREGON 97404
RIVER ROAD / EL CAMINO DEL RIO ELEMENTARY SCHOOL

SECTOR A ELECTRICAL PLAN - MECH LOFT

PROJECT #	1337.00
ISSUE DATE:	2.12.2016
DRAWN:	SC
CHECKED:	PRC

REVISIONS

E412

PRINTED ON: 2/11/2016 4:11:28 PM FROM FILE: C:\Revit Local Files\13-1533 MEP\15-1533 MEP15_karol.kluczynski.rvt

© 2014 PIVOT ARCHITECTURE

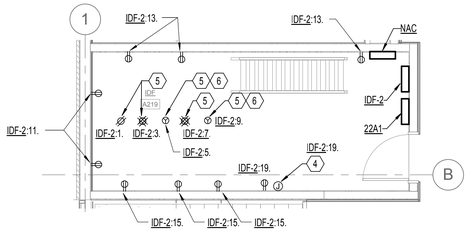

3 ENLARGED PLAN - 2ND FLOOR IDF ROOM A219
1/4" = 1'-0"

NORTH

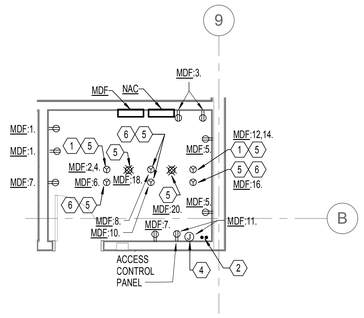

2 ENLARGED PLAN - MDF ROOM B126
1/4" = 1'-0"

NORTH

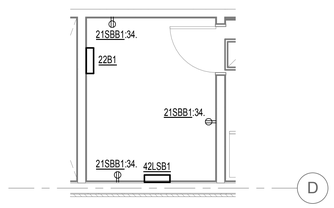

4 ENLARGED PLAN - ELECTRICAL ROOM B202
1/4" = 1'-0"

NORTH

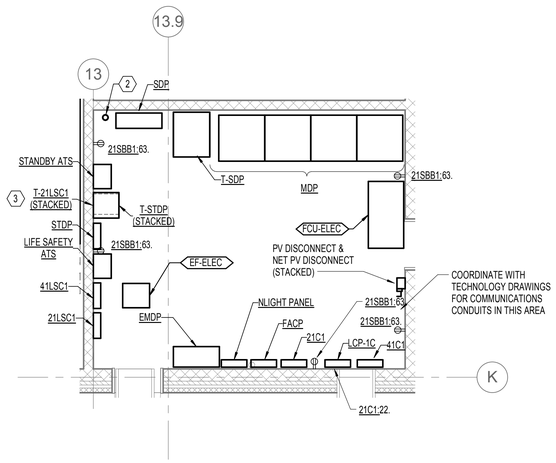

1 ENLARGED PLAN - ELECTRICAL ROOM C116
1/4" = 1'-0"

NORTH

GENERAL NOTES:

A. AREA ABOVE ALL ELECTRICAL PANELS AND SWITCH BOARDS SHALL BE KEPT CLEAR OF ALL EQUIPMENT FOREIGN TO THE ELECTRICAL INSTALLATION INCLUDING PIPING, DUCTWORK, SUPPORTS, ETC. COORDINATE INSTALLATION WITH ALL OTHER TRADES.

B. ALL PENETRATIONS AND ROUTING PATHS OF EXPOSED CONDUITS SHALL BE COORDINATED AND REVIEWED BY ARCHITECT AND ENGINEER PRIOR TO INSTALLATION.

C. PROVIDE SEPARATE NEUTRALS CONDUCTOR FOR EACH BRANCH CIRCUIT, SHARED NEUTRALS ARE NOT PERMITTED.

D. PROVIDE NO MORE THAN (6) CURRENT CARRYING CONDUCTOR PER HOMERUN.

NOTES:

1. PROVIDE A NEMA L6-30R CENTER ABOVE THE I.T. RACK MOUNTED TO BOTTOM SIDE OF CABLE TRAY. COORDINATE EXACT LOCATION WITH IT CONSULTANT.

2. 1-1/2" CONDUIT STUB-UP. REFER TO SHEET E011 FOR PATHWAY FOR FUTURE EXPANSION RACEWAY.

3. PROVIDE TRANSFORMER RACK TO STACK TRANSFORMER.

4. PROVIDE CONNECTION TO 24VDC POWER SUPPLY FOR MAGNETIC HOLD OPEN DOORS. COORDINATE EXACT LOCATION WITH IT CONSULTANT.

5. RECEPTACLE TO BE FRAME MOUNTED. COORDINATE EXACT LOCATION AND ADDITIONAL REQUIREMENTS WITH IT CONSULTANT.

6. PROVIDE A NEMA L5-30R CENTER ABOVE IT RACK MOUNTED TO BOTTOM SIDE OF CABLE TRAY. COORDINATE EXACT LOCATION WITH IT CONSULTANT.

PIVOT ARCHITECTURE

REGISTERED PROFESSIONAL ENGINEER 11612 OREGON JULY 16, 1987 STEPHEN J. SUPINA 02.09.16 EXPIRES: 6-30-16

IBI GROUP

PAE Portland | San Francisco | Seattle pae-engineers.com

BID SET

EUGENE SCHOOL DISTRICT 4J
120 WEST HILLIEARD AVENUE, EUGENE, OREGON 97404

RIVER ROAD / EL CAMINO DEL RIO ELEMENTARY SCHOOL

ENLARGED PLAN - ELECTRICAL ROOM LAYOUTS

PROJECT #	1337.00
ISSUE DATE:	2.12.2016
DRAWN:	SC
CHECKED:	PIC

REVISIONS:

E414

PRINTED ON: 2/11/2016 4:11:33 PM FROM FILE: C:\Revit Local Files\13-1533 MEP15\13-1533 MEP15_karol.kluczynski.rvt

© 2014 PIVOT ARCHITECTURE

GENERAL NOTES:

A. PV PANEL LAYOUT IS DIAGRAMMATIC ONLY. PV SYSTEM IS DESIGN/BUILT BY THE CONTRACTOR. COORDINATE FINAL PV PANEL LAYOUT WITH ARCHITECT AND STRUCTURAL DRAWINGS. REFERENCE SPECIFICATION FOR ADDITONAL INFORMATION.

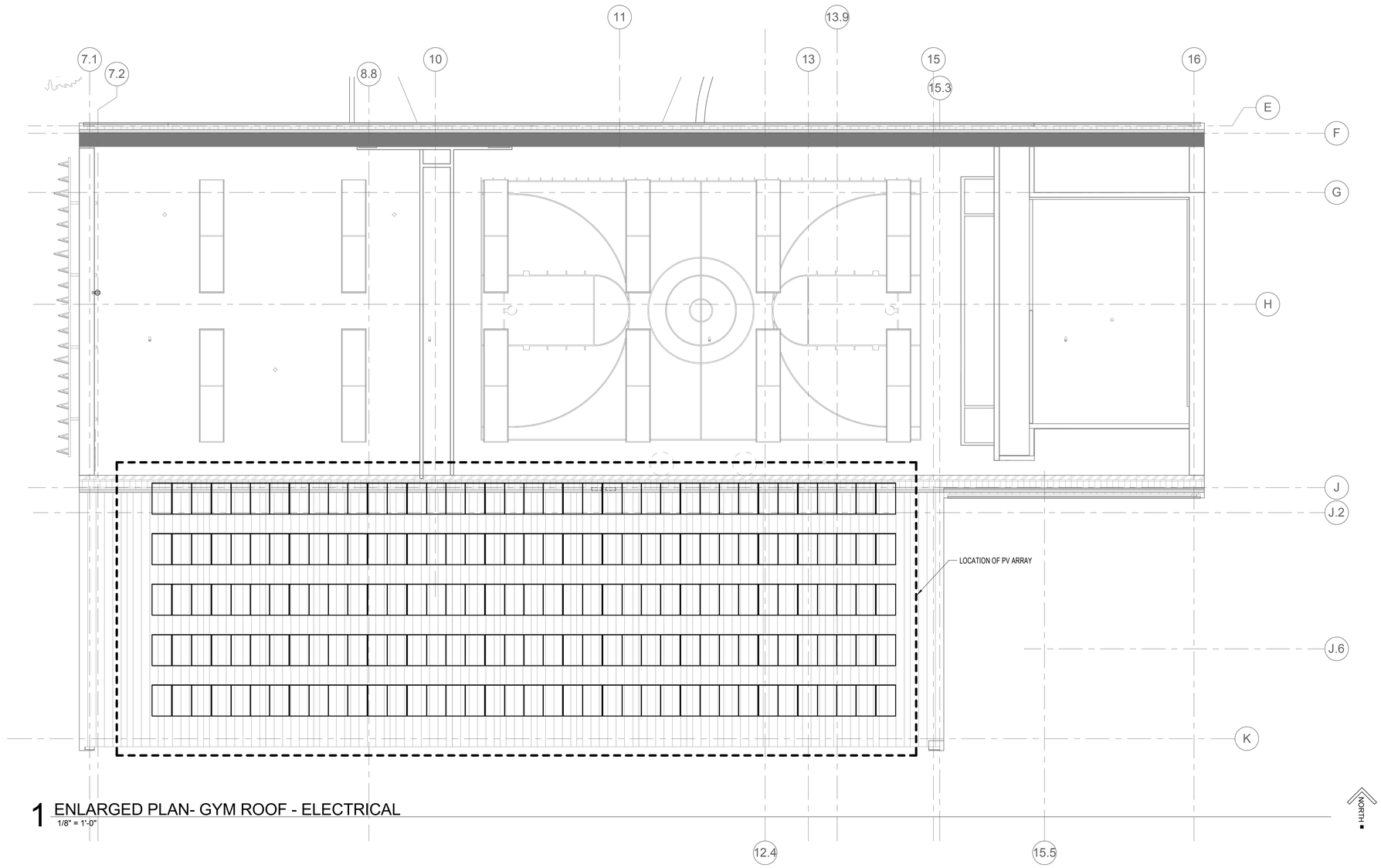

1 ENLARGED PLAN- GYM ROOF - ELECTRICAL
1/8" = 1'-0"

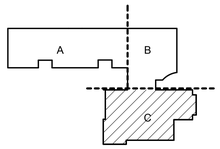

KEY PLAN

PIVOT ARCHITECTURE

REGISTERED PROFESSIONAL ENGINEER
116123
OREGON
JULY 16, 1987
STEPHEN J. TURNAK
02.09.16
EXPIRES 6-30-16

IBI GROUP

lowa

PAE
Portland | San Francisco | Seattle
pae-engineers.com

BID SET
EUGENE SCHOOL DISTRICT 4J
120 WEST HILLIEARD AVENUE, EUGENE, OREGON 97404
RIVER ROAD / EL CAMINO DEL RIO ELEMENTARY SCHOOL

GYM ROOF - POWER

PROJECT #	1337.00
ISSUE DATE:	2.12.2016
DRAWN:	SC
CHECKED:	PKC

REVISIONS

E416

PRINTED ON: 2/11/2016 4:11:38 PM FROM FILE: C:\Revit Local Files\13-1533 MEP\15-1533 MEP15_karol.kluczynski.rvt

© 2014 PIVOT ARCHITECTURE

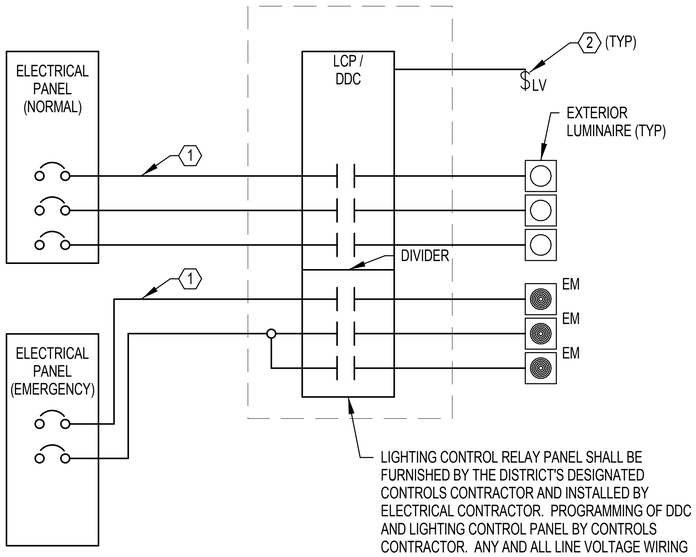

NOTES:

1. CIRCUITING IS SHOWN DIAGRAMMATICALLY. SEE LIGHTING PLANS, PANEL SCHEDULES, AND RELAY SCHEDULES FOR CIRCUITING REQUIREMENTS, LOAD INFORMATION, AND FIXTURE QUANTITIES.
2. 2-HOUR BYPASS OVERRIDE SWITCH. FOR EXTERIOR LIGHTING. INSTALL AT CUSTODIAL OFFICE 128, VERIFY LOCATION WITH DISTRICT PRIOR TO INSTALLATION.

4 4J LIGHTING CONTROL INTERFACE
NONE

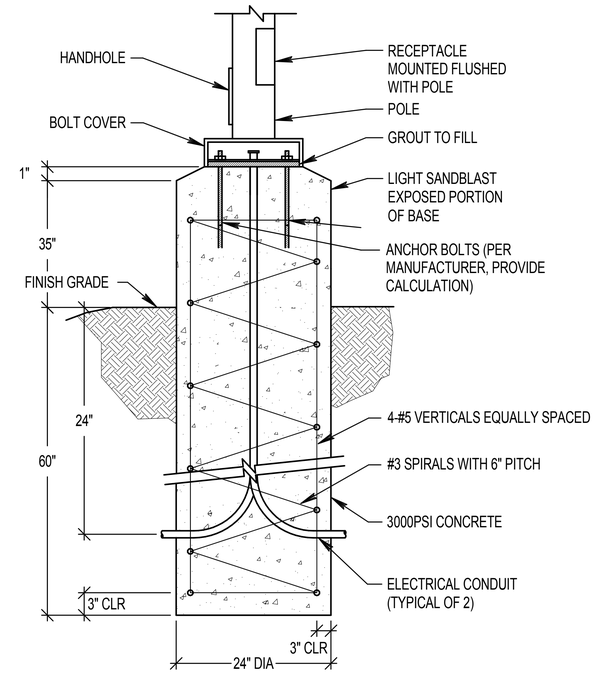

NOTE: CONCRETE BASE / FOOTING DESIGN SHALL BE VERIFIED AND APPROVED BY A STRUCTURAL ENGINEER PRIOR TO CONSTRUCTION. CONTRACTOR IS RESPONSIBLE FOR COORDINATING ALL POLE REQUIREMENTS WITH THE MANUFACTURER AND LOCAL AUTHORITY HAVING JURISDICTION AND SHALL MEET ALL APPLICABLE CODES.

2 POLE BASE DETAIL - TYPE S1 & S2
NONE

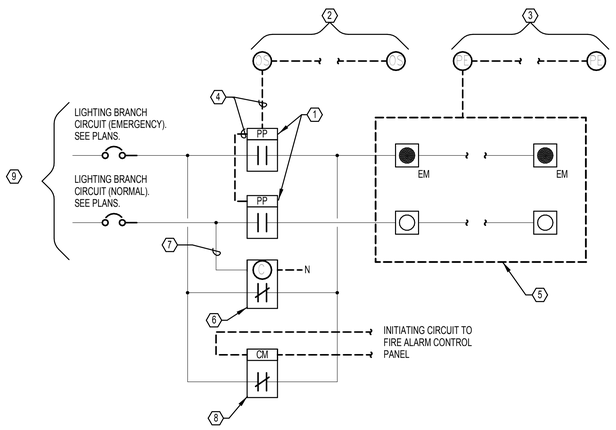

3 TYPICAL LIGHTING CONTROLS AT COMMON SPACES AND CORRIDORS
NONE

NOTES:

1. LOCAL LIGHTING CONTROL POWER PACK RELAY, CAPABLE OF INPUT FROM MULTIPLE CONTROL DEVICES. EMERGENCY LIGHTING AND NORMAL LIGHTING POWER PACKS SERVING THE SAME ZONE/AREA SHALL WORK TOGETHER TO CONTROL AS ONE ZONE DURING NORMAL CONDITIONS.
2. CEILING OCCUPANCY SENSOR(S) AS SHOWN ON PLANS FOR COVERAGE OF THE ZONE/AREA.
3. CEILING PHOTOCELL DAYLIGHT SENSOR (S) AS SHOWN ON PLANS FOR DAYLIT AREAS.
4. LOW VOLTAGE CONTROLS CABLING BETWEEN SENSORS AND POWER PACKS PER MANUFACTURER'S WIRING REQUIREMENTS.
5. EMERGENCY AND NORMAL POWER LIGHTING FIXTURES LOCATED IN THE SAME ZONE/AREA. SEE LIGHTING PLANS FOR FIXTURE TYPE, LOCATIONS, AND QUANTITIES.
6. BYPASS SHUNT RELAY LISTED UL924. LOSS OF NORMAL SHALL TURN ON EMERGENCY POWER LIGHTING.
7. BYPASS RELAY SHALL BE PROVIDED WITH UNSWITCHED NORMAL POWER BRANCH CIRCUIT SERVING THE ZONE/AREA.
8. FIRE ALARM CONTROL MODULE/RELAY. ACTUATION OF FIRE ALARM SYSTEM NOTIFICATION SHALL TURN ON EMERGENCY POWER LIGHTING.
9. CIRCUITING SHOWN DIAGRAMMATICALLY. SEE LIGHTING PLANS, PANEL SCHEDULES, AND RELAY SCHEDULES FOR CIRCUITING REQUIREMENTS, LOAD INFORMATION, AND FIXTURE QUANTITIES.

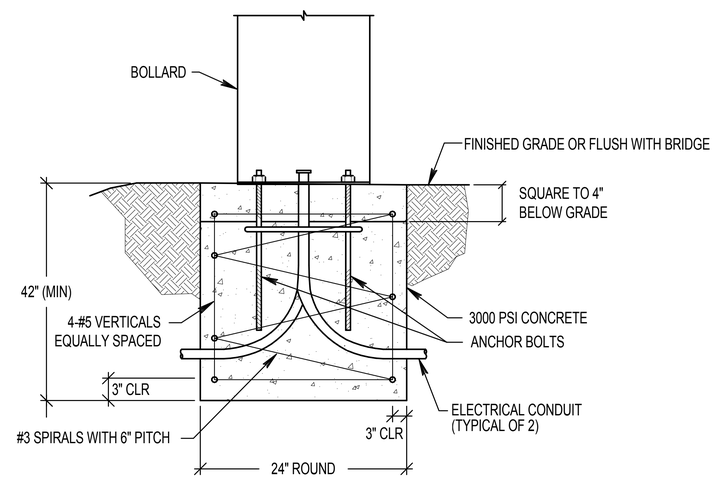

NOTE: MAINTAIN 2:1 RATIO OF BURIED TO EXPOSED CONCRETE BASE.

1 ELECTRICAL BOLLARD BASE DETAIL - TYPE S3A
NONE

PIVOT ARCHITECTURE

REGISTERED PROFESSIONAL ENGINEER 11612 OREGON JULY 16, 1982 STEPHEN J. TURNA 02.09.16 EXPIRES 6-30-16

IBI GROUP

Iowa

PAE Portland | San Francisco | Seattle pae-engineers.com

BID SET

4J EUGENE SCHOOL DISTRICT 4J
120 WEST HILLYARD AVENUE, EUGENE, OREGON 97404
RIVER ROAD / EL CAMINO DEL RIO ELEMENTARY SCHOOL

DETAILS - ELECTRICAL

PROJECT #	1337.00
ISSUE DATE:	2.12.2016
DRAWN:	SC
CHECKED:	PIC

REVISIONS:

E501

PRINTED ON: 2/11/2016 4:11:38 PM FROM FILE: C:\Revit Local Files\13-1533 MEP15\13-1533 MEP15_karol kluczynski.rvt

© 2014 PIVOT ARCHITECTURE

TABLE 1, TRANSFORMER GROUND ELECTRODE CONDUCTOR SIZE (PER NEC TABLE 250.66) 480 - 208/120Y VAC, 3 PHASE	
TRANSFORMER KVA	GROUND ELECTRODE SIZE AWG
3	8
6	8
9	8
15	8
30	8
45	4
75	2
112.5	1/0
150	2/0
225	2/0
300	3/0
500	3/0
750	3/0
1000	3/0

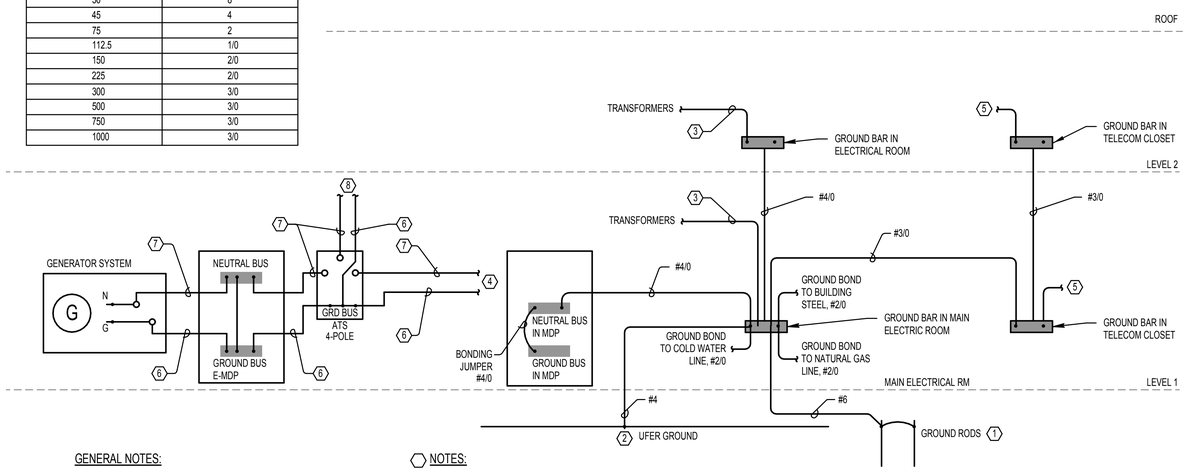

GENERAL NOTES:

A. ALL GROUNDING CONDUCTORS SHALL BE BARE COPPER CONDUCTORS, PROVIDE PVC RACEWAY AS NEEDED FOR PROTECTION.

B. DETAIL IS TYPICAL FOR EACH ELECTRICAL AND TELECOM ROOM.

NOTES:

1. PROVIDE TWO 5/8" GROUND RODS, 10' APART.
2. PROVIDE A 20 FOOT LENGTH OF #4 BARE COPPER CONDUCTOR, EMBEDDED IN THE BOTTOM PORTION OF THE CONCRETE SLAB, ELECTRODE TO BE ENCASED BY A MINIMUM OF 2" CONCRETE - OR - CONNECT TO A STEEL REINFORCING BAR WITH A MINIMUM OF 20 FOOT LENGTH AND 1/2" SIZE.
3. SIZE THE TRANSFORMER GROUNDING ELECTRODE CONDUCTOR PER TABLE 1.
4. EQUIPMENT GROUND CONDUCTOR AND NEUTRAL CONDUCTOR ROUTED TO NORMAL POWER SOURCE PANEL. REFER TO ONE-LINE DRAWING.
5. PROVIDE GROUND BOND CONNECTIONS TO THE TELECOM ROOM: CABLE TRAY, EQUIPMENT RACKS, SIGNAL CONDUITS AND MISC EQUIPMENT PER BICSI STANDARDS.
6. EQUIPMENT GROUNDING CONDUCTOR (INSULATED) INCLUDED WITH THE FEEDER.
7. NEUTRAL CONDUCTOR INCLUDED WITH THE FEEDER.
8. EQUIPMENT GROUND CONDUCTOR AND NEUTRAL CONDUCTOR INCLUDED IN FEEDER TO PANEL.

2 ELECTRICAL GROUNDING SYSTEM DETAIL
12" = 1'-0"

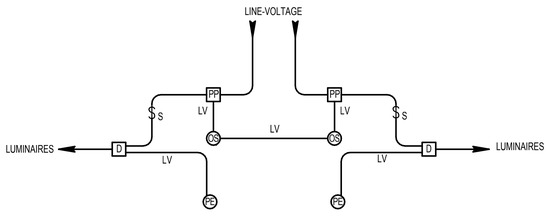

4 TYPICAL CLASSROOM LIGHTING CONTROL DIAGRAM
12" = 1'-0"

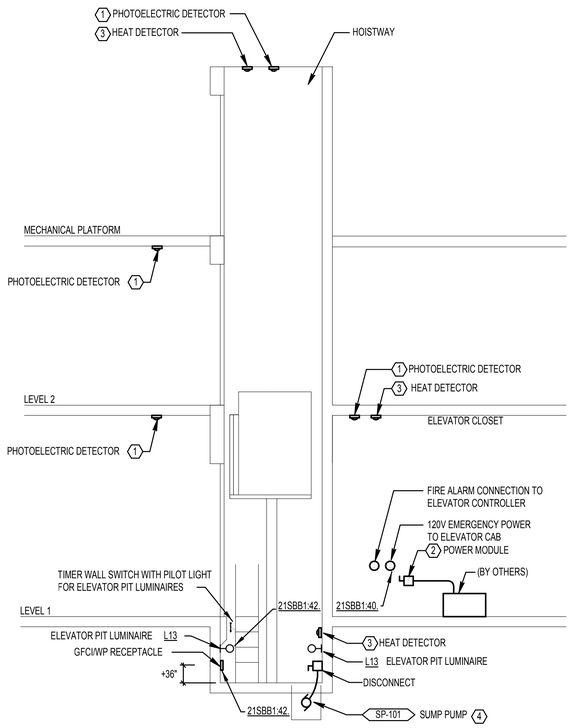

GENERAL NOTES:

A. COMMUNICATION CONNECTION TO ELEVATOR IS SHOWN ON LOW VOLTAGE DRAWINGS

NOTES:

1. CONNECT AUXILLARY CONTACTS IN DETECTOR TO ELEVATOR CONTROLLER FOR ELEVATOR RECALL.
2. PROVIDE ELEVATOR POWER MODULE (WITH INTEGRAL SHUNT TRIP). CONNECT SHUNT TRIP CONTROL VIA HEAT DETECTORS' AUXILIARY CONTACTS IN HOISTWAY, EQUIPMENT ROOM AND PIT TO POWER MODULE. POWER SHALL BE AUTOMATICALLY DISCONNECTED UPON INITIATION OF ANY OF THESE HEAT DETECTORS.
3. CONNECT AUXILLARY CONTACTS IN HEAT DETECTOR TO POWER MODULE IN EQUIPMENT ROOM FOR ELEVATOR POWER SHUTDOWN.
4. PROVIDE CONNECTION TO SUMP PUMP CONTROLLER LOCATED IN ROOM A119. COORDINATE ADDITIONAL REQUIREMENTS WITH VENDOR.

3 ELECTRICAL ELEVATOR DETAIL
12" = 1'-0"

NOTES:

1. PROVIDE PATHWAYS FOR (2) DEDICATED TELEPHONE LINES FOR FACP DIAL-OUT TO CENTRAL STATION VIA LISTED DIALER MEETING NFPA 72 REQUIREMENTS. COORDINATE WITH LOW-VOLTAGE DRAWINGS FOR ADDITIONAL REQUIREMENTS.

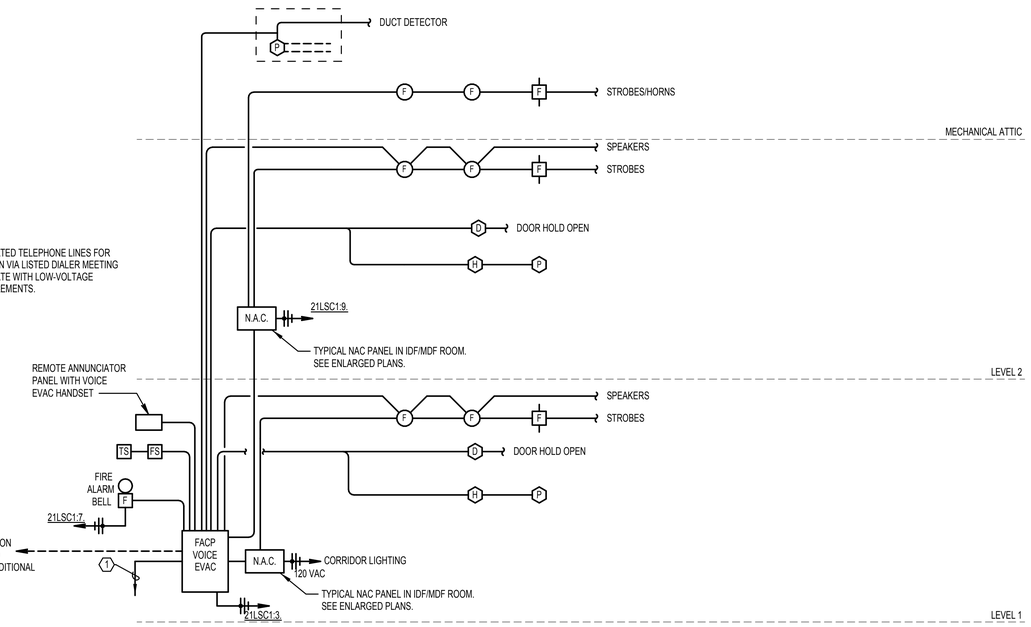

1 ELECTRICAL FIRE ALARM RISER DETAIL
12" = 1'-0"

PIVOT ARCHITECTURE

REGISTERED PROFESSIONAL ENGINEER 11612 OREGON JULY 16, 1982 STEPHEN J. TURNAK
EXPIRES 6-30-16

IBI GROUP

Iowa

PAE Portland | San Francisco | Seattle pae-engineers.com

BID SET

4J EUGENE SCHOOL DISTRICT 4J
120 WEST HILLEARD AVENUE, EUGENE, OREGON 97404

RIVER ROAD / EL CAMINO DEL RIO ELEMENTARY SCHOOL

DETAILS - ELECTRICAL

PROJECT #	1337.00
ISSUE DATE:	2.12.2016
DRAWN:	SC
CHECKED:	PIC

REVISIONS

E502

PRINTED ON: 2/11/2016 4:11:40 PM FROM FILE: C:\Revit\Local Files\13-1533 MEP15\13-1533 MEP15_karol.kluczynski.rvt

© 2014 PIVOT ARCHITECTURE

	FEEDER SCHEDULE COPPER: 3 PHASE, 3 WIRE + GROUND				FEEDER SCHEDULE COPPER: 3 PHASE, 4 WIRE + GROUND			
NOMINAL AMPACITY	TAG	CONDUIT SIZE (MIN)	PHASE CONDUCTORS	GROUND CONDUCTOR	TAG	CONDUIT SIZE (MIN)	PHASE & NEUTRAL CONDUCTORS	GROUND CONDUCTOR
20	203	1/2"	(3) #12	#12	204	1/2"	(4) #12	#12
25	253	1/2"	(3) #10	#10	254	3/4"	(4) #10	#10
30	303	1/2"	(3) #10	#10	304	3/4"	(4) #10	#10
40	403	3/4"	(3) #8	#10	404	3/4"	(4) #8	#10
50	503	3/4"	(3) #6	#10	504	1"	(4) #6	#10
60	603	1"	(3) #4	#10	604	1 1/4"	(4) #4	#10
70	703	1"	(3) #4	#8	704	1 1/4"	(4) #4	#8
80	803	1 1/4"	(3) #3	#8	804	1 1/4"	(4) #3	#8
90	903	1 1/4"	(3) #2	#8	904	1 1/4"	(4) #2	#8
100	1003	1 1/4"	(3) #2	#8	1004	1 1/2"	(4) #2	#8
110	1103	1 1/4"	(3) #1	#6	1104	1 1/2"	(4) #1	#6
125	1253	1 1/4"	(3) #1	#6	1254	2"	(4) #1/0	#4
150	1503	1 1/2"	(3) #1/0	#6	1504	2"	(4) #2/0	#4
175	1753	1 1/2"	(3) #2/0	#6	1754	2"	(4) #3/0	#4
200	2003	2"	(3) #3/0	#6	2004	2 1/2"	(4) #4/0	#4
225	2253	2"	(3) #4/0	#4	2254	2 1/2"	(4) 250KCM	#3
250	2503	2 1/2"	(3) 250KCM	#4	2504	3"	(4) 350KCM	#2
300	3003	2 1/2"	(3) 350KCM	#4	3004	3 1/2"	(4) 500KCM	#2
350	3503	3"	(3) 500KCM	#3	3504	(2) 2"	(8) #3/0	(2) #3
400	4003	(2) 2"	(6) #3/0	(2) #3	4004	(2) 2 1/2"	(8) #4/0	(2) #2
450	4503	(2) 2"	(6) #4/0	(2) #2	4504	(2) 3"	(8) 250KCM	(2) #1
500	5003	(2) 2 1/2"	(6) 250KCM	(2) #2	5004	(3) 2 1/2"	(12) #3/0	(3) #1
600	6003	(2) 3"	(6) 350KCM	(2) #1	6004	(2) 3 1/2"	(8) 500KCM	(2) #2/0
800	8003	(3) 3"	(9) 350KCM	(3) #1/0	8004	(3) 3"	(12) 350KCM	(3) #2/0
1000	10003	(3) 3"	(9) 500KCM	(3) #2/0	10004	(4) 3"	(16) 350KCM	(4) #2/0
1200	12003	(4) 3"	(12) 350KCM	(4) #3/0	12004	(4) 3 1/2"	(16) 500KCM	(4) #2/0
1600	16003	(5) 3"	(15) 500KCM	(5) #4/0	16004	(6) 3"	(24) 350KCM	(6) 250KCM
2000	20003	(6) 3"	(18) 500KCM	(6) 250KCM	20004	(6) 3 1/2"	(24) 500KCM	(6) 250KCM

NOTES (3WIRE & GROUND SCHEDULE ONLY):
1. REFER TO SPECIFICATIONS FOR INSULATION TYPE PER WIRE SIZE.
2. MINIMUM CONDUIT SIZES IDENTIFIED MEET MAXIMUM 40% FILL FOR EMT, RMC AND PVC SCHEDULE 40.
3. FOR FEEDER RATINGS 100AMPS OR LESS, ACTUAL AMPACITY IS CALCULATED BY THOSE GIVEN IN NEC 310.15(B)(16), 60DEG C.
4. FOR FEEDER RATINGS GREATER THAN 100AMPS, ACTUAL AMPACITY IS CALCULATED BY THOSE GIVEN IN NEC 310.15(B)(16), 75DEG C.

NOTES (4WIRE & GROUDN SCHEDULE ONLY):
1. REFER TO SPECIFICATIONS FOR INSULATION TYPE PER WIRE SIZE.
2. MINIMUM CONDUIT SIZES IDENTIFIED MEET MAXIMUM 40% FILL FOR EMT, RMC AND PVC SCHEDULE 40.
3. ALL NEUTRAL CONDUCTORS ARE CONSIDERED CURRENT CARRYING, THEREFORE AMPACITY ADJUSTMENTS HAVE BEEN INCLUDED IN ACCORDANCE WITH NEC TABLE 310.15(B)(3)(a) TO ACCOMMODATE FOUR (4) CURRENT CARRYING CONDUCTORS IN A SINGLE RACEWAY.
4. ADJUSTED CONDUCTOR AMPACITIES ARE CALCULATED BASED ON THOSE GIVEN FOR 90DEG C CONDUCTORS IN ACCORDANCE WITH NEC 310.15(B) AND TABLE NEC 310.15(B)(16). FOR FEEDER RATINGS 100AMPS OR LESS, THE ADJUSTED AMPACITY SHALL NOT EXCEED THE 60DEG C RATING. FOR FEEDER RATINGS GREATER THAN 100AMPS, ACTUAL AMPACITY SHALL NOT EXCEED THE 75DEG C RATING.

GENERAL NOTES:

A. ALL PANELS MOUNTED RECESSED IN WALLS SHALL HAVE SPARE CONDUITS INSTALLED AS INDICATED IN SPECIFICATIONS.

NOTES:

1. PROVIDE DEVICES FOR SELECTIVE COORDINATION OF SYSTEM PER NEC 700.28. PROVIDE NECESSARY CONDUIT/S AND WIRINGS FROM GENERATOR TO PANEL '21LSC1' PER MANUFACTURER REQUIREMENTS FOR BATTERY CHARGER, BLOCK HEATER, ETC. PROVIDE CIRCUIT BREAKERS IN PANEL '21LSC1' AS REQUIRED FOR A COMPLETE SYSTEM PER NEC AND MANUFACTURER.

2. INSTALLATION OF CHILLER IS AN ALTERNATE. INSTALLATION OF CIRCUIT BREAKER AND CONDUITS IS PART OF BASE BID.

3. REMOTE ANNUNCIATOR #1 LOCATED IN CUSTODIAL C113.

4. REMOTE ANNUNCIATOR #2 (IN WEATHERPROOF ENCLOSURE) LOCATED ON WALL ADJACENT TO EMERGENCY GENERATOR. ANNUNCIATOR SHALL NOT BE INSTALLED ON THE GENERATOR.

5. PROVIDE 1" CONDUIT AND CONTROL WIRING AS REQUIRED.

6. PROVIDE 100A/3P CIRCUIT BREAKER IN NEMA 1 ENCLOSURE.

7. METERED MAIN AND VIEWABLE FUSED SAFETY SERVICE RATED DISCONNECT SWITCH PER EWEB REQUIREMENTS. VERIFY EQUIPMENT REQUIREMENTS AND LOCATION WITH EWEB REPRESENTATIVE, ARCHITECT AND ENGINEER PRIOR TO SUBMITTALS AND INSTALLATION.

8. VIEWABLE FUSED SAFETY SERVICE RATED DISCONNECT SWITCH PER EWEB REQUIREMENTS. VERIFY EQUIPMENTS AND LOCATION WITH EWEB REPRESENTATIVE, ARCHITECT AND ENGINEER PRIOR TO SUBMITTALS AND INSTILLATION.

9. CONTRACTOR SHALL PROVIDE SOLAR PHOTOVOLTAIC SYSTEM DESIGN AND INSTALLATION. COORDINATE WITH SOLAR PV DESIGN BUILD DRAWINGS FOR EXACT EQUIPMENT REQUIREMENTS. COORDINATE LOCATION WITH OWNER AND ARCHITECT.

10. LOCATE NEAR SOLAR PV SYSTEM INVERTER EQUIPMENT. VERIFY LOCATION WITH APPROVED PV SYSTEM PLANS. PROVIDE 225A MAIN CIRCUIT BREAKER, NEMA 1, 42CKTS, 14KAIC FOR PANEL A. PROVIDE 100A MAIN CIRCUIT BREAKER, NEMA 1, 42CKTS, 14KAIC FOR PANEL B. COORDINATE EXACT REQUIREMENTS (TYPE, NUMBER OF BREAKERS, ETC.) WITH PV SHOP DRAWINGS.

11. UTILITY TERMINATION SECTION AND METERING PROVISIONS SHALL MEET EWEB REQUIREMENTS. VERIFY UTILITY COMPANY REQUIREMENTS ARE MET PRIOR TO INSTALLATION.

12. PROVIDE DOUBLE LUGS AND FEED THROUGH.

13. PROVIDE KILN DISCONNECT IF KILN DO NOT HAVE A BUILT-IN DISCONNECT.

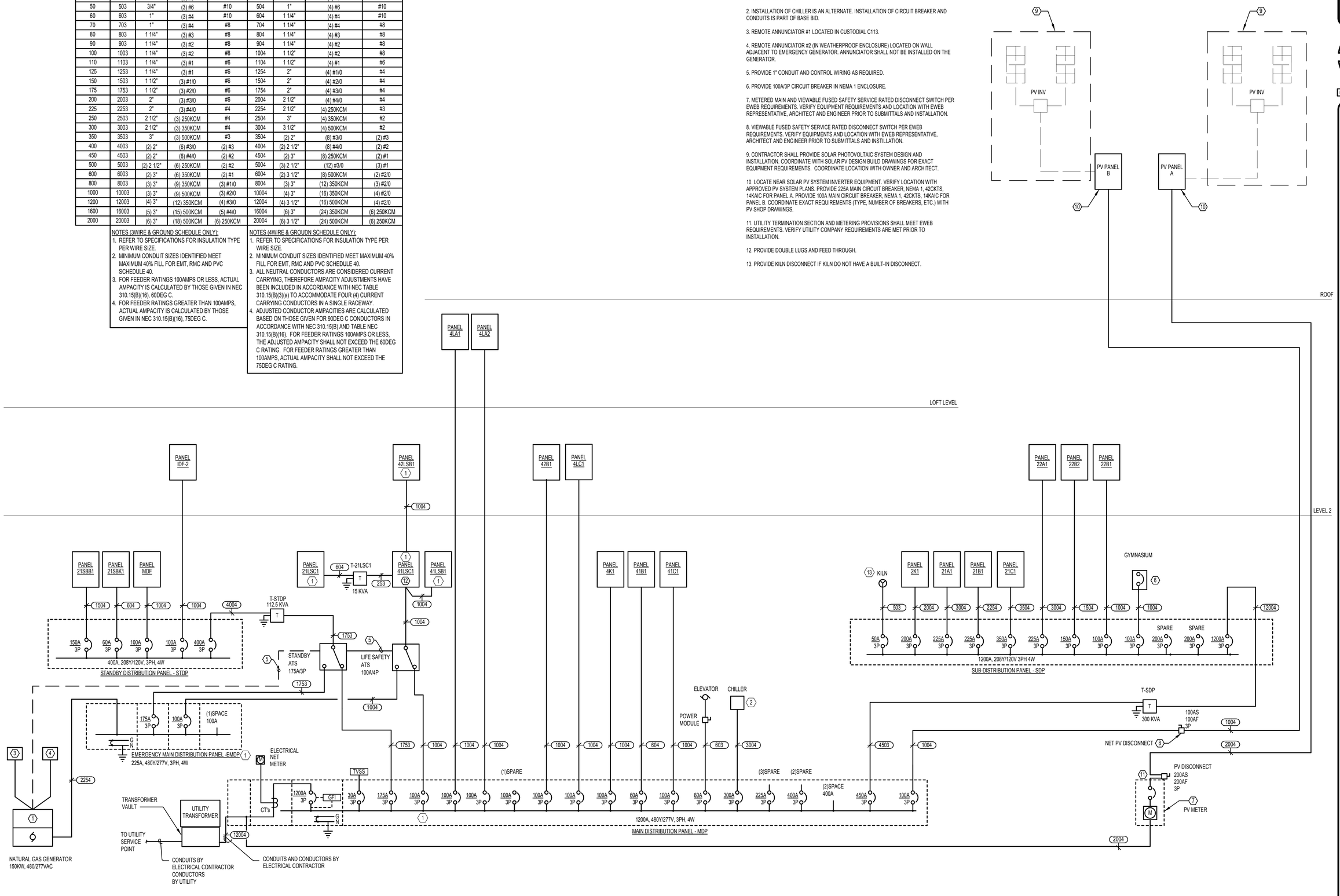

1 ONE LINE DIAGRAM - ELECTRICAL
NONE

PIVOT ARCHITECTURE

REGISTERED PROFESSIONAL ENGINEER
STEPHEN J. TURNA
OREGON
JULY 16, 1987
EXPIRES: 6-30-16

IBI GROUP

PAE
Portland | San Francisco | Seattle
pae-engineers.com

BID SET

EUGENE SCHOOL DISTRICT 4J
120 WEST HILLEARD AVENUE, EUGENE, OREGON 97404
RIVER ROAD / EL CAMINO DEL RIO ELEMENTARY SCHOOL

ONE LINE DIAGRAM - ELECTRICAL

PROJECT #	1337.00
ISSUE DATE	2.12.2016
DRAWN	SC
CHECKED	PIC
REVISIONS	

E601

PRINTED ON: 2/11/2016 4:11:42 PM FROM FILE: C:\Revit Local Files\13-1533 MEP15\13-1533 MEP15_karol.kluczynski.rvt

© 2014 PIVOT ARCHITECTURE

DESIGNATION: EMDP		TYPE: Switchboard		PROJECT NAME: EUGENE RIVER ROAD
VOLTAGE: 480	BUS RATING: A	kAIC RATING:	AVAILABLE FAULT(A):	

FEEDER ID:	TYPE	TRIP RATING (A)	CONNECTED (Amps)	DESIGN (Amps)	NOTES
EMDP	Feeder	225	96.2	89.6	
SPARE	Feeder	100	0.0	0.0	
ATS-SB	Feeder	175	74.9	64.5	
ATS-LS	Feeder	100	21.3	26.1	

DEMAND CATEGORY	Aph (VA)	Bph (VA)	Cph (VA)
Lighting	5926	3212	3970
	700	1038	1038
Equipment	11080	12800	11160
Receptacles	5727	5306	4667
Kitchen Equip	1399	455	749
DESIGN LOAD:	24832	22812	21583

TOTAL CONNECTED LOAD	VA:	73153
	Amps:	96.2
TOTAL DESIGN LOAD	VA:	69227
	Amps:	89.6

NEC 220.86 OPTIONAL CALCULATION METHOD - DEMAND CALCULATION FOR SERVICE LOAD - SCHOOLS					
Building Information	**Builing SF**	**Connected Load (VA)**	**Connected VA/SF**		
River Road Elementary School	60,000	823,895	14		
Demand Calculation	**Builing SF**	**Demand Factor**	**VA/SF**	**VA**	**Amps @ 480V**
First 3VA/SF	60,000	100%	3	180,000	217
Next 3 through 20 VA/SF	60,000	75%	11	482,921	582
Remander over 20VA/SF	60,000	25%	0	0	0
Spare Capacity/ Contingency	-	25%		165,730	200
Calculated Service Load				**828,652**	**998**
Notes:					

NEC 220.86 OPTIONAL CALCULATION METHOD - DEMAND CALCULATION FOR SERVICE LOAD - SCHOOLS					
Building Information	**Builing SF**	**Connected Load (VA)**	**Connected VA/SF**		
River Road Elementary School	75,000	1,029,869	14		
Demand Calculation	**Builing SF**	**Demand Factor**	**VA/SF**	**VA**	**Amps @ 480V**
First 3VA/SF	75,000	100%	3	225,000	271
Next 3 through 20 VA/SF	75,000	75%	11	603,652	727
Remander over 20VA/SF	75,000	25%	0	0	0
Spare Capacity/ Contingency	-	15%		124,298	150
Calculated Service Load				**952,949**	**1,148**
Notes: CALCULATE WITH 25% EXPANSION + 15% SPARE CAPACITY					

DESIGNATION: SDP	VOLTAGE: 208	PROJECT NAME: EUGENE RIVER ROAD
BUS RATING: 1200 A	AVAILABLE FAULT(A): 11401	

FEEDER ID:	TYPE	TRIP RATING (A)	CONNECTED (Amps)	DEMAND (Amps)	NOTES
22B1	Feeder	100	62.2	61.4	
22A1	Feeder	225	153.5	129.6	
21C1	Feeder	350	204.1	204.1	
22B2	Feeder	150	87.9	87.9	
21B1	Feeder	225	113.9	114.3	
KILN	Feeder	50	31.4	39.3	
GYMNASIUM	Feeder	100	0.0	0.0	
SDP MAIN	Feeder	1200	814.0	676.3	
2K1	Feeder	200	83.5	55.9	
21A1	Feeder	225	144.7	125.5	

DEMAND CATEGORY	A ph (VA)	B ph (VA)	C ph (VA)	TOTAL (VA)
Motor - Largest	6589	7587	7587	21763
Kitchen Equip	6168	5425	5523	17116
Receptacles	18572	19857	17271	55700
Equipment	49186	41611	50839	141635
DESIGN LOAD:	80514	74479	81220	236214

TOTAL CONNECTED LOAD	VA:	286778
	AMPS:	814.0
TOTAL DESIGN LOAD	VA:	236214
	AMPS:	676.3

DESIGNATION: MDP	VOLTAGE: 480	PROJECT NAME: EUGENE RIVER ROAD
BUS RATING: 1200 A	AVAILABLE FAULT(A): 21988	

FEEDER ID:	TYPE	TRIP RATING (A)	CONNECTED (Amps)	DEMAND (Amps)	NOTES
MDP MAIN	Feeder	1200	992.5	942.7	
STANDBY ATS	Feeder	175	77.3	66.3	
LIFE SAFETY ATS	Feeder	100	21.3	26.1	
ELEVATOR	Feeder	60	40.8	51.0	
4LA1	Feeder	100	42.4	42.4	
41C1	Feeder	100	58.3	62.7	
42B1	Feeder	100	21.6	27.0	
4LC1	Feeder	100	33.1	35.9	
4K1	Feeder	100	37.2	24.2	
4LA2	Feeder	100	30.1	32.9	
41B1	Feeder	60	11.3	14.1	
CHILLER	Feeder	350	272.5	283.4	
T-SDP	Feeder	450	352.7	293.1	

DEMAND CATEGORY	A ph (VA)	B ph (VA)	C ph (VA)	TOTAL (VA)
Equipment	158503	152648	159996	471147
Motor - Largest	33228	34226	34226	101681
Motor	15213	15213	15213	45640
Lighting	16693	12840	15259	44791
	700	1038	1038	2775
Receptacles	22632	23497	20362	66490
Kitchen Equip	14272	12584	12977	39833
DESIGN LOAD:	261241	252046	259070	772357

TOTAL CONNECTED LOAD	VA:	811318
	AMPS:	992.5
TOTAL DESIGN LOAD	VA:	772357
	AMPS:	942.7

1

DESIGNATION: STDP	VOLTAGE: 208	PROJECT NAME: EUGENE RIVER ROAD
BUS RATING: 400 A	AVAILABLE FAULT(A): 5373	

FEEDER ID:	TYPE	TRIP RATING (A)	CONNECTED (Amps)	DEMAND (Amps)	NOTES
21SBC1	Feeder	100	19.7	19.7	
IDF-2	Feeder	100	31.6	31.5	
STDP MAIN	Feeder	400	178.5	152.9	
MDF	Feeder	100	47.3	47.3	
21SBB1	Feeder	150	78.4	78.1	
21SBK1	Feeder	60	17.9	11.7	

DEMAND CATEGORY	A ph (VA)	B ph (VA)	C ph (VA)	TOTAL (VA)
Receptacles	5727	5306	4757	15790
Equipment	10980	12600	11420	35000
Lighting	225	0	125	350
Kitchen Equip	1399	455	749	2604
DESIGN LOAD:	18331	18362	17051	53744

TOTAL CONNECTED LOAD	VA:	60867
	AMPS:	178.5
TOTAL DESIGN LOAD	VA:	53744
	AMPS:	152.9

NOTES:

1. REFER TO NEC OPTIONAL CALCULATION METHOD SCHEDULE FOR DEMAND LOAD SUMMARY.

EMDP	SDP
	MDP
	STDP

PIVOT ARCHITECTURE

REGISTERED PROFESSIONAL ENGINEER 11612 OREGON JULY 16, 1987 STEPHEN J. TURNA 02.09.16 EXPIRES 6-30-16

IBI GROUP

Iowa

PAE Portland | San Francisco | Seattle pae-engineers.com

BID SET

4J EUGENE SCHOOL DISTRICT 4J
120 WEST HILLEARD AVENUE, EUGENE, OREGON 97404

RIVER ROAD / EL CAMINO DEL RIO ELEMENTARY SCHOOL

PANEL SCHEDULES

PROJECT #:	1337.00
ISSUE DATE:	2.12.2016
DRAWN:	SC
CHECKED:	PIC

REVISIONS

E603

PRINTED ON: 2/11/2016 4:11:44 PM FROM FILE: C:\Revit Local Files\13-1533 MEP15\13-1533 MEP15_karol.kluczynski.rvt

© 2014 PIVOT ARCHITECTURE

DESIGNATION: PANEL 21C1		VOLTAGE: 208Y/120V - 3 Ph - 4 Wire		PROJECT NAME: EUGENE RIVER ROAD	
BUS RATING(A): 350	MAIN BREAKER (A): 350	AVAILABLE FAULT(A): 11063		MOUNTING: Surface	ENCLOSURE: NEMA 1

DESCRIPTION	DEMAND CATEGORY	VA	BKR A/P	CKT	PH	CKT	BKR A/P	VA	DEMAND CATEGORY	DESCRIPTION
C100 RECEPTACLES	Receptacles	720	20/1	1	A	2	20/1	1000	Equipment	C100 BASKETBALL HOOPS
C100 RECEPTACLES	Receptacles	720	20/1	3	B	4	20/1	1000	Equipment	C100 BASKETBALL HOOPS
C100 RECEPTACLES	Receptacles	540	20/1	5	C	6	20/1	360	Equipment	C104 TABLE STOR RECEPTACLES
MUSIC 102 FLOOR BOX RCPT	Receptacles	360	20/1	7	A	8	20/1	500	Equipment	KITCHEN DISPLAY
C101 RECEPTACLES	Receptacles	360	20/1	9	B	10	20/1	500	Equipment	PROJECTION SCREEN
C100D/C101 DRINKING FOUNTAINS	Receptacles	360	20/1	11	C	12	20/1	500	Equipment	KITCHEN MOTORIZED DOOR
C101 RECEPTACLES	Receptacles	360	20/1	13	A	14	20/1	1000	Equipment	A/V RACK
C102 RECEPTACLES	Receptacles	540	20/1	15	B	16	20/1	1000	Equipment	A/V RACK
C102 RECEPTACLES	Receptacles	360	20/1	17	C	18	20/1	1000	Equipment	PROJECTOR
C102 RECEPTACLES	Receptacles	360	20/1	19	A	20	20/1	180	Receptacles	EXTERIOR RCPT
C102 TWIST LOCK OUTLET	Receptacles	750	20/1	21	B	22	20/1	1000	Receptacles	C102 SHORT THROW PROJECTOR
C102 TWIST LOCK OUTLET	Receptacles	750	20/1	23	C	24	20/1	100	Equipment	LCP PANEL
C102 TWIST LOCK OUTLET	Receptacles	750	20/1	25	A	26	15/1	336	Equipment	CUH-HALLC
C102 TWIST LOCK OUTLET	Receptacles	750	20/1	27	B	28	20/1	1000	Equipment	A/V RACK
C102 AUDIO EQUIPMENT	Equipment	500	20/1	29	C	30	20/1	1000	Equipment	A/V RACK
C102 PROJECTOR	Equipment	500	20/1	31	A	32	20/1	793	Equipment	RHWP-101 / RHTWP-101
C102 DISPLAY SCREEN	Equipment	500	20/1	33	B	34	20/1	1200	Equipment	RWTP-101
GYM RECEPTACLES	Receptacles	900	20/1	35	C	36	20/1	120	Equipment	DDC PANEL
C100 MOTORIZED PARTITION	Equipment	750	20/1	37	A	38	20/1	700	Equipment	EF-C-RR
C100 BASKETBALL HOOP CONTROLLER	Equipment	360	20/1	39	B	40	20/1	500	Equipment	BOILER EPO
C102 HAND DRYERS	Equipment	1500	20/1	41	C	42	20/1	500	Equipment	SCREENBOARD READER
C102 HAND DRYERS	Equipment	1500	20/1	43	A	44	15/2	560	Equipment	FCU-ELEC
C108 RECEPTACLES	Receptacles	540	20/1	45	B	46		560		
C109T HAND DRYERS	Equipment	1500	20/1	47	C	48	20/2	1414	Equipment	ACCU-ELEC
C109T HAND DRYERS	Equipment	1500	20/1	49	A	50		1414		
C112/113 RECEPTACLES	Receptacles	540	20/1	51	B	52	20/1	870	Equipment	B-1
C112/113 RECEPTACLES	Receptacles	360	20/1	53	C	54	20/1	870	Equipment	B-2
C112/113 RECEPTACLES	Receptacles	360	20/1	55	A	56	20/1	1273	Equipment	EF-GREASE
C112 EDF CIRCUIT	Equipment	1000	20/1	57	B	58	20/1	444	Equipment	EF-DISH
PARTITION WALL	Equipment	500	20/1	59	C	60	20/1	1000	Equipment	GWH-101
C113 HAND DRYERS	Equipment	1500	20/1	61	A	62	20/1	1000	Equipment	GWH-102
RE-CIRCULATION PUMP	Equipment	500	20/1	63	B	64	20/1	500	Equipment	YARD GATE POWER
WASHER	Equipment	1000	20/1	65	C	66	20/1	500	Equipment	SITE GATE POWER
C115 RECEPTACLES	Receptacles	540	20/1	67	A	68	20/1	540	Receptacles	PARKING LOT RCPTS
C113 KILN	Equipment	5200	60/2	69	B	70	20/1	800	Equipment	EF-C-DRY / EF-KILN
		5200		71	C	72	20/1	1180	Equipment	EF-ELEC
C300 RECEPTACLES	Receptacles	720	20/1	73	A	74	20/1	200	Equipment	TP-102
WASHER	Equipment	1000	20/1	75	B	76	20/1			SPARE
SPARE			20/1	77	C	78	20/1	500	Equipment	DOOR ACCESS EQUIPMENT
SPARE			20/1	79	A	80	20/1			SPARE
SPARE			20/1	81	B	82	20/1			SPARE
SPARE			20/1	83	C	84	20/1			SPARE

DEMAND CATEGORY	A ph (VA)	B ph (VA)	C ph (VA)	TOTAL (VA)
Receptacles	4112	4266	3270	11648
Equipment	14526	16934	19244	50705
DESIGN LOAD:	18638	21201	22514	62353

TOTAL CONNECTED LOAD	VA:	64065
	AMPS:	187.5
TOTAL DESIGN LOAD	VA:	62353
	AMPS:	187.5

DESIGNATION: PANEL 21A1		VOLTAGE: 208Y/120V - 3 Ph - 4 Wire		PROJECT NAME: EUGENE RIVER ROAD	
BUS RATING(A): 225	MAIN BREAKER (A): 225	AVAILABLE FAULT(A): 5044		MOUNTING: Surface	ENCLOSURE: NEMA 1

DESCRIPTION	DEMAND CATEGORY	VA	BKR A/P	CKT	PH	CKT	BKR A/P	VA	DEMAND CATEGORY	DESCRIPTION
BATHROOM A121 HAND DRYER	Equipment	1500	20/1	1	A	2	20/1	1000	Equipment	A102 TABLET CHARGING
BATHROOM A121 HAND DRYER	Equipment	1500	20/1	3	B	4	20/1	720	Equipment	A102 A/V EQUIPMENT
BATHROOM A121 HAND DRYER	Equipment	1500	20/1	5	C	6	20/1	500	Equipment	A102 PROJECTOR
BATHROOM A121 HAND DRYER	Equipment	1500	20/1	7	A	8	20/1			SPARE
A118/A119 RECEPTACLES	Receptacles	720	20/1	9	B	10	20/1	720	Receptacles	A102 RECEPTACLES
A118 PRINTER	Equipment	1000	20/1	11	C	12	20/1	720	Receptacles	A102 RECEPTACLES
A114 TABLET CHARGING	Equipment	1000	20/1	13	A	14	20/1	1040	Receptacles	A102 RECEPTACLES
A114 A/V EQUIPMENT	Equipment	720	20/1	15	B	16	20/1	1000	Equipment	A110 TABLET CHARGING
A114 PROJECTOR	Equipment	500	20/1	17	C	18	20/1	720	Equipment	A110 A/V EQUIPMENT
SPARE			20/1	19	A	20	20/1	500	Equipment	A110 PROJECTOR
A114 RECEPTACLES	Receptacles	720	20/1	21	B	22	20/1			SPARE
A114 RECEPTACLES	Receptacles	720	20/1	23	C	24	20/1	720	Receptacles	A110 RECEPTACLES
A114 RECEPTACLES	Receptacles	1040	20/1	25	A	26	20/1	720	Receptacles	A110 RECEPTACLES
A113 TABLET CHARGING	Equipment	720	20/1	27	B	28	20/1	1040	Receptacles	A110 RECEPTACLES
A113 A/V EQUIPMENT	Equipment	720	20/1	29	C	30	20/1	1000	Equipment	A103 TABLET CHARGING
A113 PROJECTOR	Equipment	500	20/1	31	A	32	20/1	720	Equipment	A103 A/V EQUIPMENT
SPARE			20/1	33	B	34	20/1	500	Equipment	A103 PROJECTOR
A113 RECEPTACLES	Receptacles	720	20/1	35	C	36	20/1			SPARE
A113 RECEPTACLES	Receptacles	720	20/1	37	A	38	20/1	720	Receptacles	A103 RECEPTACLES
A113 RECEPTACLES	Receptacles	1040	30/1	39	B	40	20/1	720	Receptacles	A103 RECEPTACLES
A100 TABLET CHARGING	Equipment	720	20/1	41	C	42	20/1	1040	Receptacles	A103 RECEPTACLES
A100 A/V EQUIPMENT	Equipment	720	20/1	43	A	44	20/1	1000	Equipment	A109 TABLET CHARGING
A100 PROJECTOR	Equipment	500	20/1	45	B	46	20/1	720	Equipment	A109 A/V EQUIPMENT
SPARE			20/1	47	C	48	20/1	500	Equipment	A109 PROJECTOR
A100/A122 RECEPTACLES	Receptacles	900	20/1	49	A	50	20/1			SPARE
A100 RECEPTACLES	Receptacles	720	30/1	51	B	52	30/1	720	Receptacles	A109 RECEPTACLES
A100 RECEPTACLES	Receptacles	1040	20/1	53	C	54	20/1	720	Receptacles	A109 RECEPTACLES
A101 TABLET CHARGING	Equipment	1000	20/1	55	A	56	20/1	1040	Receptacles	A109 RECEPTACLES
A101 A/V EQUIPMENT	Equipment	720	20/1	57	B	58	20/1	360	Receptacles	A117 RECEPTACLES
A101 PROJECTOR	Equipment	500	20/1	59	C	60	20/1	1260	Receptacles	A108/111/112 RECEPTACLES
SPARE			20/1	61	A	62	20/1	720	Receptacles	A111 RECEPTACLES
A101 RECEPTACLES	Receptacles	720	30/1	63	B	64	30/1	500	Receptacles	A108 COMMONS PROJECTOR
A101 RECEPTACLES	Receptacles	720	20/1	65	C	66	20/1	500	Receptacles	A108 COMMONS DISPLAY CASE
A101 RECEPTACLES	Receptacles	1040	20/1	67	A	68	20/1			SPARE
A112 COMMONS PROJECTOR	Receptacles	500	20/1	69	B	70	20/1			SPARE
A112 COMMONS DISPLAY CASE	Receptacles	500	20/1	71	C	72	20/1			SPARE
SPARE			20/1	73	A	74	20/1			SPARE
SPARE			20/1	75	B	76	20/1			SPARE
SPARE			20/1	77	C	78	20/1			SPARE
SPARE			20/1	79	A	80	20/1			SPARE
SPARE			30/1	81	B	82	30/1			SPARE
SPARE			20/1	83	C	84	20/1			SPARE

DEMAND CATEGORY	A ph (VA)	B ph (VA)	C ph (VA)	TOTAL (VA)
Equipment	9440	7100	7660	24200
Receptacles	5636	5907	5997	17540
DESIGN LOAD:	15076	13007	13657	41740

TOTAL CONNECTED LOAD	VA:	49280
	AMPS:	144.7
TOTAL DESIGN LOAD	VA:	41740
	AMPS:	125.5

DESIGNATION: PANEL 21B1		VOLTAGE: 208Y/120V - 3 Ph - 4 Wire		PROJECT NAME: EUGENE RIVER ROAD	
BUS RATING(A): 225	MAIN BREAKER (A): 225	AVAILABLE FAULT(A): 5176		MOUNTING: Surface	ENCLOSURE: NEMA 1

DESCRIPTION	DEMAND CATEGORY	VA	BKR A/P	CKT	PH	CKT	BKR A/P	VA	DEMAND CATEGORY	DESCRIPTION
A104 TABLET CHARGING	Equipment	1000	20/1	1	A	2	20/1	500	Equipment	B116 MEDIA CENTER - PROJECTOR
A104 A/V EQUIPMENT	Equipment	1000	20/1	3	B	4	20/1	720	Receptacles	B116 MEDIA CENTER
A104 PROJECTOR	Equipment	500	20/1	5	C	6	20/1	720	Receptacles	B116 MEDIA CENTER
SPARE			20/1	7	A	8	20/1	720	Receptacles	B116 MEDIA CENTER
A104 RECEPTACLES	Receptacles	720	20/1	9	B	10	20/1	540	Receptacles	B117 WORK ROOM
A104 RECEPTACLES	Receptacles	720	20/1	11	C	12	20/1	360	Receptacles	B117 WORK ROOM
A104 RECEPTACLES	Receptacles	1040	20/1	13	A	14	20/1	540	Receptacles	B119 COMMUNITY
A105 TABLET CHARGING	Equipment	1000	20/1	15	B	16	20/1	500	Receptacles	B119 COMMUNITY - PROJECTOR
A105 A/V EQUIPMENT	Equipment	1000	20/1	17	C	18	20/1	1000	Receptacles	B119 COMMUNITY
A105 PROJECTOR	Equipment	500	20/1	19	A	20	20/1	1000	Equipment	B119 COMMUNITY - REFRIGERATOR
SPARE			20/1	21	B	22	20/1	540	Receptacles	B120 CLOSET/B118 HALLWAY
A105 RECEPTACLES	Receptacles	720	20/1	23	C	24	20/1	1500	Equipment	B125 GIRLS - HAND DRYERS
A105 RECEPTACLES	Receptacles	720	20/1	25	A	26	20/1	1500	Equipment	B125 GIRLS - HAND DRYERS
A105 RECEPTACLES	Receptacles	1040	20/1	27	B	28	20/1	1500	Equipment	B125 BOYS - HAND DRYERS
A106 TABLET CHARGING	Equipment	1000	20/1	29	C	30	20/1	1500	Equipment	B125 BOYS - HAND DRYERS
A106 A/V EQUIPMENT	Equipment	1000	20/1	31	A	32	20/1	360	Receptacles	B112 HALLWAY/B123 TOILET
A106 PROJECTOR	Equipment	500	20/1	33	B	34	20/1	336	Equipment	CUH VEST
SPARE			20/1	35	C	36	20/1			SPARE
A106 RECEPTACLES	Receptacles	720	20/1	37	A	38	20/1			SPARE
A106 RECEPTACLES	Receptacles	720	20/1	39	B	40	35/2	2298	Motor - Largest	ACCU-MDF
A106 RECEPTACLES	Receptacles	1040	20/1	41	C	42		2298		
SITE RF BFP VAULT HEATER	Motor - Largest	1500	20/1	43	A	44	20/1	1200	Equipment	EF-MDF
SITE RF BFP VAULT HEATER	Equipment	1500	20/1	45	B	46	20/1			SPARE
SITE DCD BFP VAULT	Equipment	1500	20/1	47	C	48	20/1			SPARE
B116 MEDIA CENTER	Equipment	360	20/1	49	A	50	20/1			SPARE
SPARE			20/1	51	B	52	20/1			SPARE
SPARE			20/1	53	C	54	20/1			SPARE
SPARE			20/1	55	A	56	20/1			SPARE
SPARE			20/1	57	B	58	20/1			SPARE
SPARE			20/1	59	C	60	20/1			SPARE
SPARE			20/1	61	A	62	20/1			SPARE
SPARE			20/1	63	B	64	20/1			SPARE
SPARE			20/1	65	C	66	20/1			SPARE
SPARE			20/1	67	A	68	20/1			SPARE
SPARE			20/1	69	B	70	20/1			SPARE
SPARE			20/1	71	C	72	20/1			SPARE
SPARE			20/1	73	A	74	20/1			SPARE
SPARE			20/1	75	B	76	20/1			SPARE
SPARE			20/1	77	C	78	20/1			SPARE
SPARE			20/1	79	A	80	20/1			SPARE
SPARE			20/1	81	B	82	20/1			SPARE
SPARE			20/1	83	C	84	20/1			SPARE

DEMAND CATEGORY	A ph (VA)	B ph (VA)	C ph (VA)	TOTAL (VA)
Equipment	7060	5836	7000	19896
Receptacles	3717	4056	3857	11630
Motor - Largest	1875	2873	2873	7621
DESIGN LOAD:	12652	12766	13730	39147

TOTAL CONNECTED LOAD	VA:	39253
	AMPS:	113.9
TOTAL DESIGN LOAD	VA:	39147
	AMPS:	114.3

DESIGNATION: PANEL 21SBB1		VOLTAGE: 208Y/120V - 3 Ph - 4 Wire		PROJECT NAME: EUGENE RIVER ROAD	
BUS RATING(A): 150	MAIN BREAKER (A): 150	AVAILABLE FAULT(A): 2819		MOUNTING: Surface	ENCLOSURE: NEMA 1

DESCRIPTION	DEMAND CATEGORY	VA	BKR A/P	CKT	PH	CKT	BKR A/P	VA	DEMAND CATEGORY	DESCRIPTION
A100 ROLLER SHADES	Equipment	200	20/1	1	A	2	20/1	500	Equipment	B105 PROJECTOR
A101 ROLLER SHADES	Equipment	200	20/1	3	B	4	20/1	500	Equipment	B104 PROJECTOR
A101 SHADE TRANSFORMER	Equipment	500	20/1	5	C	6	20/1	540	Receptacles	B104 RECEPTACLES
A102 ROLLER SHADES	Equipment	200	20/1	7	A	8	20/1	540	Receptacles	B103 RECEPTACLES
A103 ROLLER SHADES	Equipment	200	20/1	9	B	10	20/1	1000	Equipment	B102 PRINTER
A104 ROLLER SHADES	Equipment	200	20/1	11	C	12	20/1	720	Receptacles	B102 RECEPTACLES
A105 ROLLER SHADES	Equipment	200	20/1	13	A	14	20/1	1080	Receptacles	B102 RECEPTACLES
A106 ROLLER SHADES	Equipment	200	20/1	15	B	16	20/1	1000	Equipment	B102 A/V EQUIPMENT
A107 ROLLER SHADES	Equipment	200	20/1	17	C	18	20/1	720	Receptacles	B115 RECEPTACLES
A110 ROLLER SHADES	Equipment	200	20/1	19	A	20	20/1	120	Equipment	EF-B-DRY
A113 ROLLER SHADES	Equipment	200	20/1	21	B	22	20/1	1000	Equipment	B113 REFRIGERATOR
A114 ROLLER SHADES	Equipment	200	20/1	23	C	24	20/1	500	Receptacles	B115 KITCHED RECEPTACLE
B106/107 RECEPTACLES	Receptacles	360	20/1	25	A	26	20/1	360	Receptacles	B108/109 RECEPTACLES
B110/111/112/113 RECEPTACLES	Receptacles	1080	20/1	27	B	28	20/1	360	Receptacles	B109 RECEPTACLES
B110 KITCHEN RECEPTACLES	Receptacles	1000	20/1	29	C	30	20/1	500	Equipment	A104 SHADE TRANSFORMER
B110 UNDERCOUNTER REFRIGERATOR	Equipment	1000	20/1	31	A	32	20/1	1200	Equipment	SP-101
B105 RECEPTACLES	Receptacles	540	20/1	33	B	34	20/1	540	Receptacles	ELECTRICAL ROOM 202 RCPT
A214 ROLLER SHADES	Equipment	200	20/1	35	C	36	20/1	1200	Equipment	B111 TOILET - WASHER
A213 ROLLER SHADES	Equipment	200	20/1	37	A	38	20/1			SPARE
A213 SHADE TRANSFORMER	Equipment	500	20/1	39	B	40	20/1	200	Equipment	ELEVATOR CAB
A200 ROLLER SHADES	Equipment	200	20/1	41	C	42	20/1	100	Lighting	ELEVATOR PIT LTG
A201 ROLLER SHADES	Equipment	200	20/1	43	A	44	20/1	100	Receptacles	ELEVATOR PIT RCPT
A202 ROLLER SHADES	Equipment	200	20/1	45	B	46	20/1			SPARE
A210 ROLLER SHADES	Equipment	200	20/1	47	C	48	20/1			SPARE
A203 ROLLER SHADES	Equipment	200	20/1	49	A	50	20/1			SPARE
A209 ROLLER SHADES	Equipment	200	20/1	51	B	52	20/1			SPARE
A204 ROLLER SHADES	Equipment	200	20/1	53	C	54	20/1			SPARE
A205 ROLLER SHADES	Equipment	200	20/1	55	A	56	20/1			SPARE
A206 ROLLER SHADES	Equipment	200	20/1	57	B	58	20/1			SPARE
A204 SHADE TRANSFORMER	Equipment	500	20/1	59	C	60	30/1			SPARE
COURTYARD RCPT	Receptacles	540	20/1	61	A	62	20/1			SPARE
ELECTRICAL RCPT	Receptacles	900	20/1	63	B	64	20/1			SPARE
SKYLIGHT SHADES	Equipment	400	20/1	65	C	66	20/1			SPARE
SKYLIGHT SHADES	Equipment	400	20/1	67	A	68	20/1			SPARE
SKYLIGHT SHADES	Equipment	400	20/1	69	B	70	20/1			SPARE
SPARE			20/1	71	C	72	20/1			SPARE
SPARE			20/1	73	A	74	20/1			SPARE
SPARE			20/1	75	B	76	20/1			SPARE
SPARE			20/1	77	C	78	20/1			SPARE
SPARE			20/1	79	A	80	20/1			SPARE
SPARE			20/1	81	B	82	20/1			SPARE
SPARE			20/1	83	C	84	20/1			SPARE

DEMAND CATEGORY	A ph (VA)	B ph (VA)	C ph (VA)	TOTAL (VA)
Equipment	4820	6000	4500	15320
Receptacles	2980	3377	3407	9763
Lighting	0	0	125	125
DESIGN LOAD:	7800	9376	8032	25208

TOTAL CONNECTED LOAD	VA:	25300
	AMPS:	78.4
TOTAL DESIGN LOAD	VA:	25208
	AMPS:	78.1

21C1	21A1
21B1	21SBB1

PIVOT ARCHITECTURE

REGISTERED PROFESSIONAL ENGINEER
OREGON
JULY 16, 1987
STEPHEN J. JURINA
12-09-16
EXPIRES 6-30-16

IBI GROUP

Iowa

PAE
Portland | San Francisco | Seattle
pae-engineers.com

BID SET

4J
EUGENE SCHOOL DISTRICT 4-J
120 WEST HILLIEARD AVENUE, EUGENE, OREGON 97404

RIVER ROAD / EL CAMINO DEL RIO ELEMENTARY SCHOOL

PANEL SCHEDULES

PROJECT #	1337.00
ISSUE DATE:	2.12.2016
DRAWN:	SC
CHECKED:	PIC
REVISIONS:	

E604

PRINTED ON: 2/11/2016 4:11:46 PM FROM FILE: C:\Revit Local Files\13-1533 MEP15\13-1533 MEP15_karol.kluczynski.rvt

© 2014 PIVOT ARCHITECTURE

DESIGNATION: PANEL 2K1	VOLTAGE: 208Y/120V - 3 Ph - 4 Wire	PROJECT NAME: EUGENE RIVER ROAD	
BUS RATING(A): 200	MAIN BREAKER (A): 200	AVAILABLE FAULT(A): 7471	MOUNTING: Surface / ENCLOSURE: NEMA 1

DESCRIPTION	DEMAND CATEGORY	VA	BKR A/P	CKT	PH	CKT	BKR A/P	VA	DEMAND CATEGORY	DESCRIPTION
E1 - AIR CURTAIN	Kitchen Equip	88	20/2	1	A	2	20/1	1717	Kitchen Equip	E24 - DOUBLE-SIDED MILK COOLER
		88		3	B	4	20/1	901	Kitchen Equip	E25 - MOBILE DOUBLE-SIDED FRUIT/VEGIE BAR
E2 - CONVENIENCE	Kitchen Equip	1440	20/1	5	C	6	20/1	1000	Kitchen Equip	E26 - POINT OF SALE SYSTEM
E3 - CONVENIENCE	Kitchen Equip	1440	20/1	7	A	8	20/3	128	Kitchen Equip	E27 - WASTE COLLECTOR
E4 - 30-QUART MIXER	Kitchen Equip	112	20/3	9	B	10		128		
		112		11	C	12		128		
		112		13	A	14	20/1	1440	Kitchen Equip	E30 - WAREWASHER DETERGENT FEED
E10 - FIRE PROTECTION SYSTEM	Kitchen Equip	1000	20/1	15	B	16	20/1			SPARE
E11 - CUBE ICE MACHINE	Kitchen Equip	1381	20/1	17	C	18	20/1			SPARE
E19 - 20-GALLON TILTING KETTLE	Kitchen Equip	721	25/3	19	A	20	20/1	540	Receptacles	KITCHEN RCPTS / TP-101
		721		21	B	22	20/1	540	Receptacles	KITCHEN RCPTS
		721		23	C	24	20/1	720	Receptacles	DRY STORAGE RCPTS
E21 - (2) CANOPY HOOD LIGHTS	Kitchen Equip	160	20/1	25	A	26	20/2	1638	Kitchen Equip	E23B - HOT FOOD SERVING STATION
E22A - MOBILE HEATED/PROOFING CABINET	Kitchen Equip	1441	20/1	27	B	28		1638		
E23A - HOT FOOD SERVING STATION	Kitchen Equip	1638	20/2	29	C	30	20/1	200	Equipment	TP-101
		1638		31	A	32	20/1			SPARE
17A - DOUBLE STACK COMBI-OVEN	Kitchen Equip	636	20/1	33	B	34	20/1			SPARE
17A - DOUBLE STACK COMBI-OVEN	Kitchen Equip	636	20/1	35	C	36	20/1			SPARE
BOIL TOP RANGE	Kitchen Equip	408	20/1	37	A	38	20/1			SPARE
CONVECTION STEAMER	Kitchen Equip	1681	20/1	39	B	40	20/1			SPARE
E22B - MOBILE HEATED/PROOFING CABINET	Kitchen Equip	1441	20/1	41	C	42	20/1			SPARE
SPARE			20/1	43	A	44	20/1			SPARE
SPARE			20/1	45	B	46	20/1			SPARE
SPARE			20/1	47	C	48	20/1			SPARE
SPARE			20/1	49	A	50	20/1			SPARE
SPARE			20/1	51	B	52	20/1			SPARE
SPARE			20/1	53	C	54	20/1			SPARE

DEMAND CATEGORY	A ph (VA)	B ph (VA)	C ph (VA)	TOTAL (VA)
Kitchen Equip	6168	5425	5523	17116
Receptacles	540	540	720	1800
Equipment	0	0	200	200
DESIGN LOAD:	6708	5965	6443	19116

TOTAL CONNECTED LOAD	VA:	28332
	AMPS:	83.5
TOTAL DESIGN LOAD	VA:	19116
	AMPS:	55.9

DESIGNATION: PANEL MDF	VOLTAGE: 208Y/120V - 3 Ph - 4 Wire	PROJECT NAME: EUGENE RIVER ROAD	
BUS RATING(A): 100	MAIN BREAKER (A): 100	AVAILABLE FAULT(A): 2257	MOUNTING: Surface / ENCLOSURE: NEMA 1

DESCRIPTION	DEMAND CATEGORY	VA	BKR A/P	CKT	PH	CKT	BKR A/P	VA	DEMAND CATEGORY	DESCRIPTION
MDF WALL RCPT	Receptacles	360	20/1	1	A	2	30/2	1000	Equipment	RACK RCPT 30A L6-30R
MDF WALL RCPT	Receptacles	360	20/1	3	B	4		1000		
MDF WALL RCPT	Receptacles	360	20/1	5	C	6	30/1	1500	Equipment	RACK RCPT 30A L5-30R
MDF WALL RCPT	Receptacles	360	20/1	7	A	8	30/1	1500	Equipment	RACK RCPT 30A L5-30R
SITE NETWORK SWITCH	Equipment	300	20/1	9	B	10	30/1	1500	Equipment	RACK RCPT 30A L5-30R
MDF ACCESS CNTRL & MAG HOLD	Receptacles	800	20/1	11	C	12	30/2	1000	Equipment	RACK RCPT 30A L6-30R
FCU-MDF	Equipment	450	15/2	13	A	14		1000		
		450		15	B	16	30/1	1500	Equipment	RACK RCPT 30A L5-30R
EF-MDF	Equipment	1660	20/1	17	C	18	20/1	360	Equipment	RACK RCPT
A300 DDC PANELS	Equipment	500	20/1	19	A	20	20/1	360	Equipment	RACK RCPT
SPARE			20/1	21	B	22				
SPARE			20/1	23	C	24				
SPARE			20/1	25	A	26				
SPARE			20/1	27	B	28	20/1			SPARE
SPARE			20/1	29	C	30	20/1			SPARE
SPARE			20/1	31	A	32	20/1			SPARE
SPARE			20/1	33	B	34	20/1			SPARE
SPARE			20/1	35	C	36	20/1			SPARE
SPARE			20/1	37	A	38	20/1			SPARE
SPARE			20/1	39	B	40	20/1			SPARE
SPARE			20/1	41	C	42	20/1			SPARE

DEMAND CATEGORY	A ph (VA)	B ph (VA)	C ph (VA)	TOTAL (VA)
Receptacles	720	360	1160	2240
Equipment	4810	4750	4520	14080
DESIGN LOAD:	5530	5110	5680	16320

TOTAL CONNECTED LOAD	VA:	16320
	AMPS:	47.3
TOTAL DESIGN LOAD	VA:	16320
	AMPS:	47.3

DESIGNATION: PANEL IDF-2	VOLTAGE: 208Y/120V - 3 Ph - 4 Wire	PROJECT NAME: EUGENE RIVER ROAD	
BUS RATING(A): 100	MAIN BREAKER (A): 100	AVAILABLE FAULT(A): 1834	MOUNTING: Surface / ENCLOSURE: NEMA 1

DESCRIPTION	DEMAND CATEGORY	VA	BKR A/P	CKT	PH	CKT	BKR A/P	VA	DEMAND CATEGORY	DESCRIPTION
IDF RACK RCPT	Receptacles	1000	20/1	1	A	2				
IDF RACK RCPT	Receptacles	1000	20/1	3	B	4				
IDF RACK RCPT	Receptacles	1000	30/1	5	C	6				
IDF RACK RCPT	Receptacles	1000	20/1	7	A	8				
IDF RACK RCPT	Receptacles	1000	30/1	9	B	10				
IDF WALL RCPT	Receptacles	360	20/1	11	C	12				
IDF WALL RCPT	Receptacles	540	20/1	13	A	14				
IDF WALL RCPT	Receptacles	540	20/1	15	B	16				
SITE NETWORK SWITCH	Equipment	300	20/1	17	C	18				
IDF ACCESS CNTRL & MAG HOLD	Receptacles	800	20/1	19	A	20				
SPARE			20/1	21	B	22				
EF-IDF	Equipment	700	20/1	23	C	24				
FCU-IDF	Equipment	450	15/2	25	A	26				
		450		27	B	28				
SPARE			20/1	29	C	30	20/1			SPARE
SPARE			20/1	31	A	32	20/1			SPARE
SPARE			20/1	33	B	34	20/1			SPARE
SPARE			20/1	35	C	36	20/1			SPARE
SPARE			20/1	37	A	38	20/1			SPARE
SPARE			20/1	39	B	40	20/1			SPARE
SPARE			20/1	41	C	42	20/1			SPARE

DEMAND CATEGORY	A ph (VA)	B ph (VA)	C ph (VA)	TOTAL (VA)
Receptacles	3336	2540	1360	7236
Equipment	450	450	1000	1900
DESIGN LOAD:	3786	2990	2360	9136

TOTAL CONNECTED LOAD	VA:	9140
	AMPS:	31.6
TOTAL DESIGN LOAD	VA:	9137
	AMPS:	31.5

DESIGNATION: PANEL 22A1	VOLTAGE: 208Y/120V - 3 Ph - 4 Wire	PROJECT NAME: EUGENE RIVER ROAD	
BUS RATING(A): 225	MAIN BREAKER (A): 225	AVAILABLE FAULT(A): 4631	MOUNTING: Flush / ENCLOSURE: NEMA 1

DESCRIPTION	DEMAND CATEGORY	VA	BKR A/P	CKT	PH	CKT	BKR A/P	VA	DEMAND CATEGORY	DESCRIPTION
A221 HAND DRYERS	Equipment	1500	20/1	1	A	2	20/1	720	Receptacles	A202 RECEPTACLES
A221 HAND DRYERS	Equipment	1500	20/1	3	B	4	20/1	720	Receptacles	A202 RECEPTACLES
A220 HAND DRYERS	Equipment	1500	20/1	5	C	6	20/1	1040	Receptacles	A202 RECEPTACLES
A220 HAND DRYERS	Equipment	1500	20/1	7	A	8	20/1	720	Equipment	A210 TABLET CHARGING
A222 RECEPTACLES / TP-201	Receptacles	360	20/1	9	B	10	20/1	720	Equipment	A210 A/V EQUIPMENT
A214 PROJECTOR	Equipment	500	20/1	11	C	12	20/1	500	Equipment	A210 PROJECTOR
A214/223 RECEPTACLES	Receptacles	900	20/1	13	A	14	20/1			SPARE
A214 RECEPTACLES	Receptacles	900	20/1	15	B	16	20/1	720	Receptacles	A210 RECEPTACLES
A214 RECEPTACLES	Receptacles	860	20/1	17	C	18	20/1	720	Receptacles	A210 RECEPTACLES
A213 TABLET CHARGING	Equipment	720	20/1	19	A	20	20/1	1040	Receptacles	A210 RECEPTACLES
A213 A/V EQUIPMENT	Equipment	720	20/1	21	B	22	20/1	720	Equipment	A203 TABLET CHARGING
A213 PROJECTOR	Equipment	500	20/1	23	C	24	20/1	720	Equipment	A203 A/V EQUIPMENT
SPARE			20/1	25	A	26	20/1	500	Equipment	A203 PROJECTOR
A213 RECEPTACLES	Receptacles	720	20/1	27	B	28	20/1			SPARE
A213 RECEPTACLES	Receptacles	720	20/1	29	C	30	20/1	720	Receptacles	A203 RECEPTACLES
A213 RECEPTACLES	Receptacles	1040	20/1	31	A	32	20/1	720	Receptacles	A203 RECEPTACLES
A200 TABLET CHARGING	Equipment	720	20/1	33	B	34	20/1	1040	Receptacles	A203 RECEPTACLES
A200 A/V EQUIPMENT	Equipment	720	20/1	35	C	36	20/1	720	Equipment	A209 TABLET CHARGING
A200 PROJECTOR	Equipment	500	20/1	37	A	38	20/1	720	Equipment	A209 A/V EQUIPMENT
SPARE			20/1	39	B	40	20/1	500	Equipment	A209 PROJECTOR
A200 RECEPTACLES	Receptacles	720	20/1	41	C	42	20/1			SPARE
A200 RECEPTACLES	Receptacles	720	20/1	43	A	44	20/1	720	Receptacles	A209 RECEPTACLES
A200 RECEPTACLES	Receptacles	1040	20/1	45	B	46	20/1	720	Receptacles	A209 RECEPTACLES
A201 TABLET CHARGING	Equipment	720	20/1	47	C	48	20/1	1040	Receptacles	A209 RECEPTACLES
A201 A/V EQUIPMENT	Equipment	720	20/1	49	A	50	20/1	540	Receptacles	A211 RECEPTACLES
A201 PROJECTOR	Equipment	500	20/1	51	B	52	20/1	540	Receptacles	A211 RECEPTACLES
SPARE			20/1	53	C	54	20/1	360	Receptacles	A208/A212 BALCONY
A201 RECEPTACLES	Receptacles	720	20/1	55	A	56	20/1	500	Receptacles	A208 COMMONS DISPLAY
A201 RECEPTACLES	Receptacles	720	20/1	57	B	58	20/1	500	Receptacles	A208 COMMONS PROJECTOR
A201 RECEPTACLES	Receptacles	1040	20/1	59	C	60	20/1	500	Receptacles	A212 COMMON DISPLAY
A202 TABLET CHARGING	Equipment	720	20/1	61	A	62	20/1	180	Receptacles	A212 COMMON RECEPTACLES
A202 A/V EQUIPMENT	Equipment	720	20/1	63	B	64	20/1	500	Receptacles	A212 COMMON PROJECTOR
A202 PROJECTOR	Equipment	500	20/1	65	C	66	20/1			SPARE
EF-A-RR	Equipment	1272	20/1	67	A	68	20/1	1260	Receptacles	MECH PLAT A300 RCPT
TP-201	Equipment	200	20/1	69	B	70	20/1	1080	Receptacles	MECH PLAT A300 RCPT
SPARE			20/1	71	C	72	20/1	540	Receptacles	MECH PLAT A300 RCPT
SPARE			20/1	73	A	74	20/1	500	Equipment	A300 DDC PANELS
SPARE			20/1	75	B	76	20/1			SPARE
SPARE			20/1	77	C	78	20/1			SPARE
SPARE			20/1	79	A	80	20/1			SPARE
SPARE			20/1	81	B	82	20/1			SPARE
SPARE			20/1	83	C	84	20/1			SPARE

DEMAND CATEGORY	A ph (VA)	B ph (VA)	C ph (VA)	TOTAL (VA)
Equipment	9372	6300	6380	22052
Receptacles	6197	6447	5797	18440
DESIGN LOAD:	15569	12747	12177	40492

TOTAL CONNECTED LOAD	VA:	48932
	AMPS:	153.5
TOTAL DESIGN LOAD	VA:	40492
	AMPS:	129.6

DESIGNATION: PANEL 22B2	VOLTAGE: 208Y/120V - 3 Ph - 4 Wire	PROJECT NAME: EUGENE RIVER ROAD	
BUS RATING(A): 150	MAIN BREAKER (A): 150	AVAILABLE FAULT(A): 4436	MOUNTING: Surface / ENCLOSURE: NEMA 1

DESCRIPTION	DEMAND CATEGORY	VA	BKR A/P	CKT	PH	CKT	BKR A/P	VA	DEMAND CATEGORY	DESCRIPTION
A204 TABLET CHARGING	Equipment	720	20/1	1	A	2	20/1			SPARE
A204 A/V EQUIPMENT	Equipment	720	20/1	3	B	4	20/1			SPARE
A204 PROJECTOR	Equipment	500	20/1	5	C	6	20/2	1414	Equipment	ACCU-IDF
SPARE			20/1	7	A	8		1414		
A204 RECEPTACLES	Receptacles	720	20/1	9	B	10	20/1			SPARE
A204 RECEPTACLES	Receptacles	720	20/1	11	C	12	20/1	1500	Equipment	B213 HAND DRYERS
A204 RECEPTACLES	Receptacles	1040	20/1	13	A	14	20/1	1500	Equipment	B213 HAND DRYERS
A205 TABLET CHARGING	Equipment	720	20/1	15	B	16	20/1	1500	Equipment	B214 HAND DRYERS
A205 A/V EQUIPMENT	Equipment	720	20/1	17	C	18	20/1	1500	Equipment	B214 HAND DRYERS
A205 PROJECTOR	Equipment	500	20/1	19	A	20	20/1	360	Receptacles	B214/215 RECEPTACLES / TP-301
SPARE			20/1	21	B	22	20/1	360	Receptacles	B211/215 RECEPTACKES
A205 RECEPTACLES	Receptacles	720	20/1	23	C	24	20/1	720	Receptacles	B207 RECEPTACLES
A205 RECEPTACLES	Receptacles	720	20/1	25	A	26	20/1	720	Receptacles	B208/209
A205 RECEPTACLES	Receptacles	1040	20/1	27	B	28	20/1	360	Receptacles	B209 RECEPTACLES
A206 TABLET CHARGING	Equipment	720	20/1	29	C	30	20/1	1000	Equipment	B209 COPIER
A206 A/V EQUIPMENT	Equipment	720	20/1	31	A	32	20/1	180	Receptacles	B205 RECEPTACLES
A206 PROJECTOR	Equipment	500	20/1	33	B	34	20/1	1000	Receptacles	B209 WORKROOM ISLAND RECEPTACLES
SPARE			20/1	35	C	36	20/1			SPARE
A206 RECEPTACLES	Receptacles	720	20/1	37	A	38	20/1			SPARE
A206 RECEPTACLES	Receptacles	720	20/1	39	B	40	20/1			SPARE
A206 RECEPTACLES	Receptacles	1040	20/1	41	C	42	20/1			SPARE
SPARE			20/1	43	A	44	20/1			SPARE
SPARE			20/1	45	B	46	20/1			SPARE
SPARE			20/1	47	C	48	20/1			SPARE
SPARE			20/1	49	A	50	20/1			SPARE
SPARE			20/1	51	B	52	20/1			SPARE
SPARE			20/1	53	C	54	20/1			SPARE

DEMAND CATEGORY	A ph (VA)	B ph (VA)	C ph (VA)	TOTAL (VA)
Equipment	4854	3440	7354	15649
Receptacles	3536	3766	3200	10503
DESIGN LOAD:	8391	7207	10554	26152

TOTAL CONNECTED LOAD	VA:	26789
	AMPS:	87.9
TOTAL DESIGN LOAD	VA:	26152
	AMPS:	87.9

DESIGNATION: PANEL 22B1	VOLTAGE: 208Y/120V - 3 Ph - 4 Wire	PROJECT NAME: EUGENE RIVER ROAD	
BUS RATING(A): 100	MAIN BREAKER (A): 100	AVAILABLE FAULT(A): 2872	MOUNTING: Surface / ENCLOSURE: NEMA 1

DESCRIPTION	DEMAND CATEGORY	VA	BKR A/P	CKT	PH	CKT	BKR A/P	VA	DEMAND CATEGORY	DESCRIPTION
A203 RECEPTACLES	Receptacles	1000	20/1	1	A	2	20/1	1660	Equipment	EF-ADMIN
B200 REFRIGERATOR	Equipment	1000	20/1	3	B	4	20/1	1000	Equipment	GARBAGE DISPOSAL
B200 REFRIGERATOR	Equipment	1000	20/1	5	C	6	20/1	1000	Receptacles	A203 RECEPTACLES
B200 KITCHEN RECEPTACLE	Receptacles	1000	20/1	7	A	8	20/1	1273	Equipment	EF-B-RR
B200 KITCHEN RECEPTACLE	Receptacles	1000	20/1	9	B	10	20/1			SPARE
B200 KITCHEN RECEPTACLE	Receptacles	1000	20/1	11	C	12	20/1			SPARE
B200 KITCHEN RECEPTACLE	Receptacles	1000	20/1	13	A	14	20/1			SPARE
B200 KITCHEN RECEPTACLE	Receptacles	1000	20/1	15	B	16	20/1			SPARE
B200 RECEPTACLES	Receptacles	540	20/1	17	C	18	20/1			SPARE
B200/201 RECEPTACLES	Receptacles	540	20/1	19	A	20	20/1			SPARE
B204 RECEPTACLES	Receptacles	720	20/1	21	B	22	20/1			SPARE
B205 RECEPTACLES	Receptacles	180	20/1	23	C	24	20/1			SPARE
B200 DISHWASHER	Equipment	1000	20/1	25	A	26	20/1			SPARE
HALLWAY B115/B100 RCPTS	Receptacles	900	20/1	27	B	28	20/1			SPARE
SPARE			20/1	29	C	30	20/1			SPARE
SPARE			20/1	31	A	32	20/1			SPARE
SPARE			20/1	33	B	34	20/1			SPARE
SPARE			20/1	35	C	36	20/1			SPARE
SPARE			20/1	37	A	38	20/1			SPARE
SPARE			20/1	39	B	40	20/1			SPARE
SPARE			20/1	41	C	42	20/1			SPARE

DEMAND CATEGORY	A ph (VA)	B ph (VA)	C ph (VA)	TOTAL (VA)
Receptacles	3437	3477	2720	9633
Equipment	3933	2000	1000	6933
DESIGN LOAD:	7369	5477	3720	16566

TOTAL CONNECTED LOAD	VA:	16813
	AMPS:	62.2
TOTAL DESIGN LOAD	VA:	16566
	AMPS:	61.4

2K1	22A1
MDF	22B2
IDF-2	22B1

PIVOT ARCHITECTURE

REGISTERED PROFESSIONAL ENGINEER 11612 OREGON JULY 16, 1987 STEPHEN J. KURNIK 02.09.16 EXPIRES: 6-30-16

IBI GROUP

lowa

PAE Portland | San Francisco | Seattle pae-engineers.com

BID SET

EUGENE SCHOOL DISTRICT 4J
120 WEST HILLEARD AVENUE, EUGENE, OREGON 97404
RIVER ROAD / EL CAMINO DEL RIO ELEMENTARY SCHOOL

PANEL SCHEDULES

PROJECT #	1337.05
ISSUE DATE:	2.12.2016
DRAWN:	SC
CHECKED:	PSC

REVISIONS

E605

PRINTED ON: 2/11/2016 4:11:47 PM FROM FILE: C:\Revit Local Files\13-1533 MEP15-13-1533 MEP15_karol.kluczynski.rvt

© 2014 PIVOT ARCHITECTURE

DESIGNATION: PANEL 41B1		VOLTAGE: 480Y/277V - 3 Ph - 4 Wire		PROJECT NAME: EUGENE RIVER ROAD	
BUS RATING(A): 60	MAIN BREAKER (A): 60	AVAILABLE FAULT(A): 16242		MOUNTING: Surface	ENCLOSURE: NEMA 1

DESCRIPTION	DEMAND CATEGORY	VA	BKR A/P	CKT	PH	CKT	BKR A/P	VA	DEMAND CATEGORY	DESCRIPTION
RM A100/101/120-122 LTG	Lighting	1364	20/1	1	A	2	20/1	480	Lighting	RM B100/B101 LTG
RM A102/103 LTG	Lighting	1112	20/1	3	B	4	20/1	500	Lighting	RM B123/124/125/126/117 LTG
RM A104/105 LTG	Lighting	1112	20/1	5	C	6	20/1	302	Lighting	RM B119/120 LTG
RM A106 LTG	Lighting	556	20/1	7	A	8	20/1	192	Lighting	RM B121/122 LTG
RM A108/110 LTG	Lighting	1112	20/1	9	B	10	20/1			SPARE
RM A113/114 LTG	Lighting	1112	20/1	11	C	12	20/1			SPARE
RM A109/111/116/117 LTG	Lighting	544	20/1	13	A	14	20/1			SPARE
SPARE			20/1	15	B	16	20/1			SPARE
SPARE			20/1	17	C	18	20/1			SPARE
SPARE			20/1	19	A	20	20/1			SPARE
SPARE			20/1	21	B	22	20/1			SPARE
SPARE			20/1	23	C	24	20/1			SPARE
SPARE			20/1	25	A	26	20/1			SPARE
SPARE			20/1	27	B	28	20/1			SPARE
SPARE			20/1	29	C	30	20/1			SPARE
SPARE			20/1	31	A	32	20/1			SPARE
SPARE			20/1	33	B	34	20/1			SPARE
SPARE			20/1	35	C	36	20/1			SPARE
SPARE			20/1	37	A	38	20/1			SPARE
SPARE			20/1	39	B	40	20/1			SPARE
SPARE			20/1	41	C	42	20/1			SPARE

DEMAND CATEGORY	A ph (VA)	B ph (VA)	C ph (VA)	TOTAL (VA)
Lighting	3920	3405	3158	10483
DESIGN LOAD:	3920	3405	3158	10483

TOTAL CONNECTED LOAD	VA:	8386
	AMPS:	11.3
TOTAL DESIGN LOAD	VA:	10483
	AMPS:	14.1

DESIGNATION: PANEL 4LA1		VOLTAGE: 480Y/277V - 3 Ph - 4 Wire		PROJECT NAME: EUGENE RIVER ROAD	
BUS RATING(A): 100	MAIN BREAKER (A): 100	AVAILABLE FAULT(A): 9522		MOUNTING: Surface	ENCLOSURE: NEMA 1

DESCRIPTION	DEMAND CATEGORY	VA	BKR A/P	CKT	PH	CKT	BKR A/P	VA	DEMAND CATEGORY	DESCRIPTION
AH-A1HALL/A2HALL	Equipment	2328	15/3	1	A	2	15/3	1663	Equipment	AH-A206/A207/A209
		2328		3	B	4		1663		
		2328		5	C	6		1663		
AH-A104/A105/A106	Equipment	1663	15/3	7	A	8	15/3	1109	Equipment	AH-A210/A212
		1663		9	B	10		1109		
		1663		11	C	12		1109		
AH-A107/A109/A110	Equipment	1663	15/3	13	A	14	20/1			
		1663		15	B	16				
		1663		17	C	18				
AH-A111/A112/A212	Equipment	1663	15/3	19	A	20	20/1			SPARE
		1663		21	B	22	20/1			SPARE
		1663		23	C	24	20/1			SPARE
AH-A203/A204/A205	Equipment	1663	15/3	25	A	26	20/1			SPARE
		1663		27	B	28	20/1			SPARE
		1663		29	C	30	20/1			SPARE
SPARE			20/1	31	A	32	20/1			SPARE
SPARE			20/1	33	B	34	20/1			SPARE
SPARE			20/1	35	C	36	20/1			SPARE
SPARE			20/1	37	A	38	20/1			SPARE
SPARE			20/1	39	B	40	20/1			SPARE
SPARE			20/1	41	C	42	20/1			SPARE

DEMAND CATEGORY	A ph (VA)	B ph (VA)	C ph (VA)	TOTAL (VA)
Equipment	11750	11750	11750	35251
DESIGN LOAD:	11750	11750	11750	35251

TOTAL CONNECTED LOAD	VA:	35251
	AMPS:	42.4
TOTAL DESIGN LOAD	VA:	35251
	AMPS:	42.4

DESIGNATION: PANEL 41C1		VOLTAGE: 480Y/277V - 3 Ph - 4 Wire		PROJECT NAME: EUGENE RIVER ROAD	
BUS RATING(A): 100	MAIN BREAKER (A): 100	AVAILABLE FAULT(A): 20761		MOUNTING: Surface	ENCLOSURE: NEMA 1

DESCRIPTION	DEMAND CATEGORY	VA	BKR A/P	CKT	PH	CKT	BKR A/P	VA	DEMAND CATEGORY	DESCRIPTION
CP-1	Equipment	3900	20/3	1	A	2	20/3	3900	Motor - Largest	WELL PUMP
		3900		3	B	4		3900		
		3900		5	C	6		3900		
CP-2	Equipment	3900	20/3	7	A	8	20/3	1333	Equipment	CT TRASH COMP
		3900		9	B	10		1333		
		3900		11	C	12		1333		
RWTS-101	Equipment	2100	20/3	13	A	14	20/1			SPARE
		2100		15	B	16	20/1			SPARE
		2100		17	C	18	20/1			SPARE
RM C102 LUMINAIRES	Lighting	452	20/1	19	A	20	20/1			SPARE
RM C103/104/106/107 LUMINAIRES	Lighting	726	20/1	21	B	22	20/1			SPARE
RM C105 LUMINAIRES	Lighting	68	20/1	23	C	24	20/1			SPARE
GIRLS BATHROOM LUMINAIRES	Lighting	148	20/1	25	A	26	20/1			SPARE
RM C108 LUMINAIRES	Lighting	168	20/1	27	B	28	20/1			SPARE
RM C112 LUMINAIRES	Lighting	450	20/1	29	C	30	20/1			SPARE
RM C114/116 LUMINAIRES	Lighting	384	20/1	31	A	32	20/1			SPARE
SPARE			20/1	33	B	34	20/1			SPARE
SPARE			20/1	35	C	36	20/1			SPARE
SPARE			20/1	37	A	38	20/1			SPARE
SPARE			20/1	39	B	40	20/1			SPARE
SPARE			20/1	41	C	42	20/1			SPARE

DEMAND CATEGORY	A ph (VA)	B ph (VA)	C ph (VA)	TOTAL (VA)
Equipment	11233	11233	11233	33699
Motor - Largest	4875	4875	4875	14625
Lighting	1267	1117	648	3032
DESIGN LOAD:	17375	17226	16756	51356

TOTAL CONNECTED LOAD	VA:	47625
	AMPS:	58.3
TOTAL DESIGN LOAD	VA:	51357
	AMPS:	62.7

DESIGNATION: PANEL 4LA2		VOLTAGE: 480Y/277V - 3 Ph - 4 Wire		PROJECT NAME: EUGENE RIVER ROAD	
BUS RATING(A): 100	MAIN BREAKER (A): 100	AVAILABLE FAULT(A): 8481		MOUNTING: Surface	ENCLOSURE: NEMA 1

DESCRIPTION	DEMAND CATEGORY	VA	BKR A/P	CKT	PH	CKT	BKR A/P	VA	DEMAND CATEGORY	DESCRIPTION
AH-A100/A101/A103	Motor - Largest	1663	15/3	1	A	2	15/3	1385	Equipment	AH-ADMIN
		1663		3	B	4		1385		
		1663		5	C	6		1385		
AH-A200/A201	Equipment	1109	15/3	7	A	8	20/3	1385	Motor - Largest	AH-MEDIA
		1109		9	B	10		1385		
		1109		11	C	12		1385		
SPARE			20/1	13	A	14	15/3	1667	Equipment	AH-STAFF/LOBBY
SPARE			20/1	15	B	16		1667		
SPARE			20/1	17	C	18		1667		
SPARE			20/1	19	A	20	20/3	582	Equipment	RF-ADMIN
SPARE			20/1	21	B	22		582		
SPARE			20/1	23	C	24		582		
SPARE			20/1	25	A	26	15/3	554	Equipment	AH-COMM
SPARE			20/1	27	B	28		554		
SPARE			20/1	29	C	30		554		
SPARE			20/1	31	A	32	20/1			SPARE
SPARE			20/1	33	B	34	20/1			SPARE
SPARE			20/1	35	C	36	20/1			SPARE
SPARE			20/1	37	A	38	20/1			SPARE
SPARE			20/1	39	B	40	20/1			SPARE
SPARE			20/1	41	C	42	20/1			SPARE

DEMAND CATEGORY	A ph (VA)	B ph (VA)	C ph (VA)	TOTAL (VA)
Motor - Largest	3810	3810	3810	11429
Equipment	5297	5297	5297	15890
DESIGN LOAD:	9106	9106	9106	27319

TOTAL CONNECTED LOAD	VA:	25034
	AMPS:	30.1
TOTAL DESIGN LOAD	VA:	27319
	AMPS:	32.9

DESIGNATION: PANEL 4LC1		VOLTAGE: 480Y/277V - 3 Ph - 4 Wire		PROJECT NAME: EUGENE RIVER ROAD	
BUS RATING(A): 100	MAIN BREAKER (A): 100	AVAILABLE FAULT(A): 6503		MOUNTING: Surface	ENCLOSURE: NEMA 1

DESCRIPTION	DEMAND CATEGORY	VA	BKR A/P	CKT	PH	CKT	BKR A/P	VA	DEMAND CATEGORY	DESCRIPTION
AH-GYM	Motor - Largest	3050	20/3	1	A	2	20/3	1133	Equipment	TRASH COMPACTOR
		3050		3	B	4		1133		
		3050		5	C	6		1133		
AH-CAFE	Equipment	3325	20/3	7	A	8	20/1			SPARE
		3325		9	B	10	20/1			SPARE
		3325		11	C	12	20/1			SPARE
AH-KITCHEN / AH-CUST	Equipment	1666	20/3	13	A	14	20/1			SPARE
		1666		15	B	16	20/1			SPARE
		1666		17	C	18	20/1			SPARE
AH-MUSIC	Equipment	833	20/3	19	A	20	20/1			SPARE
		833		21	B	22	20/1			SPARE
		833		23	C	24	20/1			SPARE
SPARE			20/1	25	A	26	20/1			SPARE
SPARE			20/1	27	B	28	20/1			SPARE
SPARE			20/1	29	C	30	20/1			SPARE
SPARE			20/1	31	A	32	20/1			SPARE
SPARE			20/1	33	B	34	20/1			SPARE
SPARE			20/1	35	C	36	20/1			SPARE
SPARE			20/1	37	A	38	20/1			SPARE
SPARE			20/1	39	B	40	20/1			SPARE
SPARE			20/1	41	C	42	20/1			SPARE

DEMAND CATEGORY	A ph (VA)	B ph (VA)	C ph (VA)	TOTAL (VA)
Motor - Largest	3813	3813	3813	11438
Equipment	6957	6957	6957	20871
DESIGN LOAD:	10770	10770	10770	32309

TOTAL CONNECTED LOAD	VA:	30021
	AMPS:	36.1
TOTAL DESIGN LOAD	VA:	32309
	AMPS:	38.9

41B1	4LA1
41C1	4LA2
4LC1	

PIVOT ARCHITECTURE

REGISTERED PROFESSIONAL ENGINEER 71612 OREGON JULY 16, 1987 STEPHEN J. TURNA

12.09.16

EXPIRES: 6-30-16

IBI GROUP

Iowa

PAE
Portland | San Francisco | Seattle
pae-engineers.com

BID SET

4J
EUGENE SCHOOL DISTRICT 4J
120 WEST HILLIEARD AVENUE, EUGENE, OREGON 97404

RIVER ROAD / EL CAMINO DEL RIO ELEMENTARY SCHOOL

PANEL SCHEDULES

PROJECT #:	1337.00
ISSUE DATE:	2.12.2016
DRAWN:	SC
CHECKED:	PIC

REVISIONS:

E606

PRINTED ON: 2/11/2016 4:11:49 PM FROM FILE: C:\Revit Local Files\13-1533 MEP15\13-1533 MEP15_karol.kluczynski.rvt

© 2014 PIVOT ARCHITECTURE

DESIGNATION: PANEL 21SBK1	VOLTAGE: 208Y/120V - 3 Ph - 4 Wire	PROJECT NAME: EUGENE RIVER ROAD	
BUS RATING(A): 60	MAIN BREAKER (A): 60	AVAILABLE FAULT(A): 2056	MOUNTING: Surface / ENCLOSURE: NEMA 1

DESCRIPTION	DEMAND CATEGORY	VA	BKR A/P	CKT	PH	CKT	BKR A/P	VA	DEMAND CATEGORY	DESCRIPTION
E5 - WALK-IN DOOR HEATER	Kitchen Equip	500	20/1	1	A	2	20/1	500	Kitchen Equip	E8 - WALK-IN DRAIN LINE HEATER
E6 - (2) WALK-IN LIGHTS	Kitchen Equip	160	20/1	3	B	4	20/1	240	Kitchen Equip	E9 - WALK-IN COOLER EVAPORTATOR
E7 - WALK-IN FREEZER EVAPORATOR	Kitchen Equip	458	20/2	5	C	6	20/2	395	Kitchen Equip	E12 - WALK-IN COOLER CONDENSING UNIT
		458		7	A	8		395		
C102 ADA LIFT	Equipment	2000	30/1	9	B	10	20/3	300	Kitchen Equip	E13 - WALK-IN FREEZER CONDENSING UNIT
SPARE			20/1	11	C	12		300		
SPARE			20/1	13	A	14		300		
SPARE			20/1	15	B	16	20/1			SPARE
SPARE			20/1	17	C	18	20/1			SPARE
SPARE			20/1	19	A	20	20/1			SPARE
SPARE			20/1	21	B	22	20/1			SPARE
SPARE			20/1	23	C	24	20/1			SPARE
SPARE			20/1	25	A	26	20/1			SPARE
SPARE			20/1	27	B	28	20/1			SPARE
SPARE			20/1	29	C	30	20/1			SPARE
SPARE			20/1	31	A	32	20/1			SPARE
SPARE			20/1	33	B	34	20/1			SPARE
SPARE			20/1	35	C	36	20/1			SPARE
SPARE			20/1	37	A	38	20/1			SPARE
SPARE			20/1	39	B	40	20/1			SPARE
SPARE			20/1	41	C	42	20/1			SPARE

DEMAND CATEGORY	A ph (VA)	B ph (VA)	C ph (VA)	TOTAL (VA)
Kitchen Equip	1399	455	749	2604
Equipment	0	2000	0	2000
DESIGN LOAD:	1399	2455	749	4604

TOTAL CONNECTED LOAD	VA:	6006
	AMPS:	22.5
TOTAL DESIGN LOAD	VA:	4604
	AMPS:	20.4

DESIGNATION: PANEL 21LSC1	VOLTAGE: 208Y/120V - 3 Ph - 4 Wire	PROJECT NAME: EUGENE RIVER ROAD	
BUS RATING(A): 60	MAIN BREAKER (A): 60	AVAILABLE FAULT(A): 680	MOUNTING: Surface / ENCLOSURE: NEMA 1

DESCRIPTION	DEMAND CATEGORY	VA	BKR A/P	CKT	PH	CKT	BKR A/P	VA	DEMAND CATEGORY	DESCRIPTION
SPARE			20/1	1	A	2	20/1	500	Equipment	B101 LOBBY - MOTORIZED GATE
FACP POWER	Equipment	100	20/1	3	B	4	20/1	500	Equipment	B100 VESTIBULE - SECTIONAL DOORS
C102 MUSIC ROOM LUMINAIRES	Lighting	4	20/1	5	C	6	20/1			SPARE
FIRE ALARM BELL	Equipment	100	20/1	7	A	8	20/1			SPARE
NAC PANEL	Equipment	100	20/1	9	B	10	20/1			SPARE
SPARE			20/1	11	C	12	20/1			SPARE
SPARE			20/1	13	A	14	20/1			SPARE
SPARE			20/1	15	B	16	20/1			SPARE
SPARE			20/1	17	C	18	20/1			SPARE

DEMAND CATEGORY	A ph (VA)	B ph (VA)	C ph (VA)	TOTAL (VA)
Equipment	600	700	0	1300
Lighting	0	0	5	5
DESIGN LOAD:	600	700	5	1305

TOTAL CONNECTED LOAD	VA:	1304
	AMPS:	5.8
TOTAL DESIGN LOAD	VA:	1305
	AMPS:	5.8

DESIGNATION: PANEL 4K1	VOLTAGE: 480Y/277V - 3 Ph - 4 Wire	PROJECT NAME: EUGENE RIVER ROAD	
BUS RATING(A): 100	MAIN BREAKER (A): 100	AVAILABLE FAULT(A): 6503	MOUNTING: Surface / ENCLOSURE: NEMA 1

DESCRIPTION	DEMAND CATEGORY	VA	BKR A/P	CKT	PH	CKT	BKR A/P	VA	DEMAND CATEGORY	DESCRIPTION
E28 - WAREWASHER (TANK HEAT/MOTORS)	Kitchen Equip	314	20/3	1	A	2	20/1			SPARE
		314		3	B	4	20/1			SPARE
		314		5	C	6	20/1			SPARE
E29 - WAREWASHER BOOSTER HEATER	Kitchen Equip	10000	50/3	7	A	8	20/1			SPARE
		10000		9	B	10	20/1			SPARE
		10000		11	C	12	20/1			SPARE
SPARE			20/1	13	A	14	20/1			SPARE
SPARE			20/1	15	B	16	20/1			SPARE
SPARE			20/1	17	C	18	20/1			SPARE

DEMAND CATEGORY	A ph (VA)	B ph (VA)	C ph (VA)	TOTAL (VA)
Kitchen Equip	6704	6704	6704	20112
DESIGN LOAD:	6704	6704	6704	20112

TOTAL CONNECTED LOAD	VA:	30942
	AMPS:	37.2
TOTAL DESIGN LOAD	VA:	20112
	AMPS:	24.2

DESIGNATION: PANEL 41LSC1	VOLTAGE: 480Y/277V - 3 Ph - 4 Wire	PROJECT NAME: EUGENE RIVER ROAD	
BUS RATING(A): 100	MAIN BREAKER (A): MLO	AVAILABLE FAULT(A): 15526	MOUNTING: Surface / ENCLOSURE: NEMA 1

DESCRIPTION	DEMAND CATEGORY	VA	BKR A/P	CKT	PH	CKT	BKR A/P	VA	DEMAND CATEGORY	DESCRIPTION
RM C100/101KITCHEN LUMINAIRES	Lighting	300	20/1	1	A	2	20/1	336	Lighting	SOUTH EXTERIOR WALL LIGHTS
RM C103/108 LUMINAIRES	Lighting	118	20/1	3	B	4	20/1	730		LCP RELAY r101/102/103
RM C102 LUMINAIRES	Lighting	82	20/1	5	C	6	20/1	830		LCP RELAY r104/106/107
C114/116/115 LUMINAIRES	Lighting	640	20/1	7	A	8	20/1	560		LCP RELAY r108/109/110
SPARE			20/1	9	B	10	20/1	100		LCP RELAY r111
SPARE			20/1	11	C	12	20/1			SPARE
SPARE			20/1	13	A	14	20/1			SPARE
SPARE			20/1	15	B	16	20/1			SPARE
SPARE			20/1	17	C	18	20/1			SPARE
SPARE			20/1	19	A	20	20/1			SPARE
SPARE			20/1	21	B	22	20/1			SPARE
SPARE			20/1	23	C	24	20/1			SPARE

DEMAND CATEGORY	A ph (VA)	B ph (VA)	C ph (VA)	TOTAL (VA)
Lighting	5926	3212	3845	12984
	700	1038	1038	2775
Equipment	600	700	0	1300
DESIGN LOAD:	7226	4950	4883	17059

TOTAL CONNECTED LOAD	VA:	13907
	AMPS:	21.3
TOTAL DESIGN LOAD	VA:	17059
	AMPS:	26.1

DESIGNATION: PANEL 41LSB1	VOLTAGE: 480Y/277V - 3 Ph - 4 Wire	PROJECT NAME: EUGENE RIVER ROAD	
BUS RATING(A): 100	MAIN BREAKER (A): MLO	AVAILABLE FAULT(A): 5776	MOUNTING: Surface / ENCLOSURE: NEMA 1

DESCRIPTION	DEMAND CATEGORY	VA	BKR A/P	CKT	PH	CKT	BKR A/P	VA	DEMAND CATEGORY	DESCRIPTION
RM A100/111/112/117 LUMINAIRES	Lighting	326	20/1	1	A	2	20/1	252	Lighting	RM B108/109 LUMINAIRES
RM A118 LUMINAIRES	Lighting	129	20/1	3	B	4	20/1	96	Lighting	RM B121/122 LUMINAIRES
RM B101/102 LUMINAIRES	Lighting	544	20/1	5	C	6	20/1	564	Lighting	RELAY r113/114/115
RM B103/104/105 LUMINAIRES	Lighting	246	20/1	7	A	8	20/1			SPARE
RM B106/107/111/114 LUMINAIRES	Lighting	172	20/1	9	B	10	20/1			SPARE
RM B110/112/113 LUMINAIRES	Lighting	96	20/1	11	C	12	20/1			SPARE
RM B115 LUMINAIRES	Lighting	222	20/1	13	A	14	20/1			SPARE
SPARE			20/1	15	B	16	20/1			SPARE
SPARE			20/1	17	C	18	20/1			SPARE
SPARE			20/1	19	A	20	20/1			SPARE
SPARE			20/1	21	B	22	20/1			SPARE
SPARE			20/1	23	C	24	20/1			SPARE

DEMAND CATEGORY	A ph (VA)	B ph (VA)	C ph (VA)	TOTAL (VA)
Lighting	1308	496	1505	3309
DESIGN LOAD:	1308	496	1505	3309

TOTAL CONNECTED LOAD	VA:	2647
	AMPS:	4.3
TOTAL DESIGN LOAD	VA:	3309
	AMPS:	5.4

DESIGNATION: PANEL 42LSB1	VOLTAGE: 480Y/277V - 3 Ph - 4 Wire	PROJECT NAME: EUGENE RIVER ROAD	
BUS RATING(A): 100	MAIN BREAKER (A): MLO	AVAILABLE FAULT(A): 6488	MOUNTING: Surface / ENCLOSURE: NEMA 1

DESCRIPTION	DEMAND CATEGORY	VA	BKR A/P	CKT	PH	CKT	BKR A/P	VA	DEMAND CATEGORY	DESCRIPTION
RM B208/211/212/217 LUMINAIRES	Lighting	323	20/1	1	A	2	20/1			SPARE
RM B216 LUMINAIRES	Lighting	224	20/1	3	B	4	20/1	544	Lighting	MECHANICAL PLATFORM LTG
RM B201/202/COMMON SPACE LUMINAIRES	Lighting	286	20/1	5	C	6	20/1			SPARE
RM B210/215 LUMINAIRES	Lighting	96	20/1	7	A	8	20/1			SPARE
RELAY r/a103/104	Lighting	1287	20/1	9	B	10	20/1			SPARE
RELAY r/a124	Lighting	1500	20/1	11	C	12	20/1			SPARE
RELAY r/a125	Lighting	2000	20/1	13	A	14	20/1			SPARE
SPARE			20/1	15	B	16	20/1			SPARE
SPARE			20/1	17	C	18	20/1			SPARE

DEMAND CATEGORY	A ph (VA)	B ph (VA)	C ph (VA)	TOTAL (VA)
Lighting	3024	2569	2233	7825
DESIGN LOAD:	3024	2569	2233	7825

TOTAL CONNECTED LOAD	VA:	6260
	AMPS:	8.7
TOTAL DESIGN LOAD	VA:	7825
	AMPS:	10.9

DESIGNATION: PANEL 42B1	VOLTAGE: 480Y/277V - 3 Ph - 4 Wire	PROJECT NAME: EUGENE RIVER ROAD	
BUS RATING(A): 100	MAIN BREAKER (A): 100	AVAILABLE FAULT(A): 6640	MOUNTING: Surface / ENCLOSURE: NEMA 1

DESCRIPTION	DEMAND CATEGORY	VA	BKR A/P	CKT	PH	CKT	BKR A/P	VA	DEMAND CATEGORY	DESCRIPTION
RM A200/201/219/220/221/222 LUMINAIRES	Lighting	1460	20/1	1	A	2	20/1	259	Lighting	RM B200 LUMINAIRES
RM A202/203 LUMINAIRES	Lighting	1176	20/1	3	B	4	20/1	151	Lighting	RM B203/204 LUMINAIRES
RM A204/205 LUMINAIRES	Lighting	1176	20/1	5	C	6	20/1	777	Lighting	COMMON AREA LUMINAIRES
RM A206 LUMINAIRES	Lighting	588	20/1	7	A	8	20/1	244	Lighting	RM B207/208/209 LUMINAIRES
RM A209/210 LUMINAIRES	Lighting	1176	20/1	9	B	10	20/1	96	Lighting	RM B210/215 LUMINAIRES
RM A213/214 LUMINAIRES	Lighting	1162	20/1	11	C	12	20/1	244	Lighting	RM B211/212/213/214 LUMINAIRES
RM C208/211/212/217 LUMINAIRES	Lighting	732	20/1	13	A	14	20/1			SPARE
RELAY r/a101/102	Lighting	1485	20/1	15	B	16	20/1			SPARE
RELAY r/a121/122	Lighting	2500	20/1	17	C	18	20/1	128	Lighting	RM C300 MECH PLTFRM LUMINARIES
RELAY r/a124	Lighting	1000	20/1	19	A	20				
			20/1	21	B	22				
			20/1	23	C	24				
			20/1	25	A	26				
			20/1	27	B	28				
			20/1	29	C	30				
			20/1	31	A	32				
			20/1	33	B	34				
			20/1	35	C	36				
			20/1	37	A	38				
			20/1	39	B	40				
			20/1	41	C	42				

DEMAND CATEGORY	A ph (VA)	B ph (VA)	C ph (VA)	TOTAL (VA)
Lighting	5354	5105	7484	17943
DESIGN LOAD:	5354	5105	7484	17943

TOTAL CONNECTED LOAD	VA:	14354
	AMPS:	21.6
TOTAL DESIGN LOAD	VA:	17943
	AMPS:	27.0

21SBK1	41LSB1
21LSC1	42LSB1
4K1	42B1
41LSC1	

PIVOT ARCHITECTURE

REGISTERED PROFESSIONAL ENGINEER 71612 OREGON JULY 16, 1987 STEPHEN J. JURINA 02-09-16

EXPIRES: 6-30-16

IBI GROUP

Iowa

PAE
Portland | San Francisco | Seattle
pae-engineers.com

BID SET

4J EUGENE SCHOOL DISTRICT 4J
120 WEST HILLEARD AVENUE, EUGENE, OREGON 97404

RIVER ROAD / EL CAMINO DEL RIO ELEMENTARY SCHOOL

PANEL SCHEDULES

PROJECT #:	13373.00
ISSUE DATE:	2.12.2016
DRAWN:	SC
CHECKED:	PIC
REVISIONS:	

E607

1 E607 PANEL SCHEDULES
NONE

PRINTED ON: 2/11/2016 4:11:51 PM FROM FILE: C:\Revit Local Files\13-1533 MEP15\13-1533 MEP15_karol.kluczynski.rvt

© 2014 PIVOT ARCHITECTURE

MECHANICAL EQUIPMENT CONNECTION SCHEDULE

EQUIPMENT DESCRIPTIONS			ELECTRICAL CHARACTERISTICS							CONNECTION CHARACTERISTICS				FEEDER CHARACTERISTICS			PANEL INFORMATION	SCCR	NOTES
TAG	DESCRIPTION	LOCATION	KW	HP	FLA	MCA	MOCP	VOLTS	PHASE	VFD	1-POINT CONNECT	STARTER DIVISION	DISCONNECT DIVISION	CONDUIT DIA (INCH)	PHASE CONDUCTORS	GROUND CONDUCTOR	PANEL NAME	AVAILABLE FAULT AT EQUIPMENT (AMPS)	
DDC PANEL	CONTROL PANEL	MULTIPLE						120	1	NO	YES	23	23	3/4"	2#12	1#12	NEAREST MECH PANEL		
AH-GYM	AIR HANDLING UNIT	MECH C200		7.50	11.0	13.0	20	460	3	YES	YES	23	26	3/4"	4#8	1#8	4LC1		6
AH-CAFE	AIR HANDLING UNIT	MECH C200		4 (2)	12.0	15.0	20	460	3	NO	YES	-	26	3/4"	4#12	1#12	4LC1		6
AH-KITCH	AIR HANDLING UNIT	MECH C200		1.34	2.0	2.0	15	460	3	NO	YES	-	26	3/4"	4#12	1#12	4LC1		
AH-CUST	AIR HANDLING UNIT	MECH C200		1.34	2.0	2.0	15	460	3	NO	YES	-	26	3/4"	4#12	1#12	4LC1		
AH-COMM	AIR HANDLING UNIT	MECH B300		1.34	2.0	2.0	15	460	3	NO	YES	-	26	3/4"	4#12	1#12	4LA2		
AH-MUSIC	AIR HANDLING UNIT	MECH C200		1.34	2.0	2.0	15	460	3	NO	YES	-	26	3/4"	4#12	1#12	4LC1		
AH-ADMIN	AIR HANDLING UNIT	MECH B300		2.3 (2)	5.0	6.0	15	460	3	NO	YES	-	26	3/4"	4#12	1#12	4LA2		6
AH-MEDIA	AIR HANDLING UNIT	MECH B300		2.3 (2)	5.0	19.0	20	460	3	NO	YES	-	26	3/4"	4#12	1#12	4LA2		6
AH-STAFF	AIR HANDLING UNIT	MECH B300		1.34	2.0	2.0	15	460	3	NO	YES	-	26	3/4"	4#12	1#12	4LA2		
AH-LOBBY	AIR HANDLING UNIT	MECH B300		1.34	2.0	2.0	15	460	3	NO	YES	-	26	3/4"	4#12	1#12	4LA2		6
AH-A1HALL	AIR HANDLING UNIT	MECH A300		4.00	4.2	5.0	15	460	3	NO	YES	-	26	3/4"	4#12	1#12	4LA1		6
AH-A2HALL	AIR HANDLING UNIT	MECH A300		4.00	4.2	5.0	15	460	3	NO	YES	-	26	3/4"	4#12	1#12	4LA1		6
AH-A100	AIR HANDLING UNIT	MECH A300		1.34	2.0	2.0	15	460	3	NO	YES	-	26	3/4"	4#12	1#12	4LA2		
AH-A101	AIR HANDLING UNIT	MECH A300		1.34	2.0	2.0	15	460	3	NO	YES	-	26	3/4"	4#12	1#12	4LA2		
AH-A103	AIR HANDLING UNIT	MECH A300		1.34	2.0	2.0	15	460	3	NO	YES	-	26	3/4"	4#12	1#12	4LA2		
AH-A104	AIR HANDLING UNIT	MECH A300		1.34	2.0	2.0	15	460	3	NO	YES	-	26	3/4"	4#12	1#12	4LA1		
AH-A105	AIR HANDLING UNIT	MECH A300		1.34	2.0	2.0	15	460	3	NO	YES	-	26	3/4"	4#12	1#12	4LA1		
AH-A106	AIR HANDLING UNIT	MECH A300		1.34	2.0	2.0	15	460	3	NO	YES	-	26	3/4"	4#12	1#12	4LA1		
AH-A107	AIR HANDLING UNIT	MECH A300		1.34	2.0	2.0	15	460	3	NO	YES	-	26	3/4"	4#12	1#12	4LA1		
AH-A109	AIR HANDLING UNIT	MECH A300		1.34	2.0	2.0	15	460	3	NO	YES	-	26	3/4"	4#12	1#12	4LA1		
AH-A110	AIR HANDLING UNIT	MECH A300		1.34	2.0	2.0	15	460	3	NO	YES	-	26	3/4"	4#12	1#12	4LA1		
AH-A111	AIR HANDLING UNIT	MECH A300		1.34	2.0	2.0	15	460	3	NO	YES	-	26	3/4"	4#12	1#12	4LA1		
AH-A112	AIR HANDLING UNIT	MECH A300		1.34	2.0	2.0	15	460	3	NO	YES	-	26	3/4"	4#12	1#12	4LA1		
AH-A200	AIR HANDLING UNIT	MECH A300		1.34	2.0	2.0	15	460	3	NO	YES	-	26	3/4"	4#12	1#12	4LA2		
AH-A201	AIR HANDLING UNIT	MECH A300		1.34	2.0	2.0	15	460	3	NO	YES	-	26	3/4"	4#12	1#12	4LA2		
AH-A203	AIR HANDLING UNIT	MECH A300		1.34	2.0	2.0	15	460	3	NO	YES	-	26	3/4"	4#12	1#12	4LA1		
AH-A204	AIR HANDLING UNIT	MECH A300		1.34	2.0	2.0	15	460	3	NO	YES	-	26	3/4"	4#12	1#12	4LA1		
AH-A205	AIR HANDLING UNIT	MECH A300		1.34	2.0	2.0	15	460	3	NO	YES	-	26	3/4"	4#12	1#12	4LA1		
AH-A206	AIR HANDLING UNIT	MECH A300		1.34	2.0	2.0	15	460	3	NO	YES	-	26	3/4"	4#12	1#12	4LA1		
AH-A207	AIR HANDLING UNIT	MECH A300		1.34	2.0	2.0	15	460	3	NO	YES	-	26	3/4"	4#12	1#12	4LA1		
AH-A209	AIR HANDLING UNIT	MECH A300		1.34	2.0	2.0	15	460	3	NO	YES	-	26	3/4"	4#12	1#12	4LA1		
AH-A210	AIR HANDLING UNIT	MECH A300		1.34	2.0	2.0	15	460	3	NO	YES	-	26	3/4"	4#12	1#12	4LA1		
AH-A211	AIR HANDLING UNIT	MECH A300		1.34	2.0	2.0	15	460	3	NO	YES	-	26	3/4"	4#12	1#12	4LA1		
AH-A212	AIR HANDLING UNIT	MECH A300		1.34	2.0	2.0	15	460	3	NO	YES	-	26	3/4"	4#12	1#12	4LA1		
FCU-IDF	FAN COIL UNIT	IDF A219			4.3	5.4	15	208	1	NO	YES	23	23	3/4"	2#12	1#12	IDF-2		
FCU-MDF	FAN COIL UNIT	MDF B126			4.3	5.4	15	208	1	NO	YES	23	23	3/4"	2#12	1#12	MDF		
FCU-ELEC	FAN COIL UNIT	ELEC C116			4.3	5.4	15	208	1	NO	YES	23	23	3/4"	2#12	1#12	21C1		
CUH-VEST	FAN COIL UNIT	VESTIBULE B100	0.30		2.8	3.5	15	120	1	NO	YES	26	26	3/4"	2#12	1#12	21B1		
CUH-HALLC	FAN COIL UNIT	HALL C108	0.30		2.8	3.5	15	120	1	NO	YES	26	26	3/4"	2#12	1#12	21C1		
ACCU-IDF	CONDENSING UNIT	MECH A300			0.7 (FAN)	13.6	20	208	1	NO	YES	23	23	3/4"	2#10	1#10	22B2		
ACCU-MDF	CONDENSING UNIT	MECH B300			1.2 (FAN)	22.1	35	208	1	NO	YES	23	23	3/4"	2#10	1#10	21B1		
ACCU-ELEC	CONDENSING UNIT	UTILITY YARD			0.7 (FAN)	13.6	20	208	1	NO	YES	23	23	3/4"	2#10	1#10	21C1		
ACC-1	CHILLER	UTILITY YARD				260.0	300	460	3	NO	YES	23	23	SEE ELECTRICAL ONE-LINE					7
	- CONTROL PANEL																		
	-HEATER																		
	LIGHT																		
B-1	BOILER	BOILER ROOM C114	0.87		7.3		20	120	1	NO	YES	23	26	3/4"	2#12	1#12	21C1		1
	- BOILER CONTROL PANEL																		
	- BOILER EMERGENCY POWER OFF																		
B-2	BOILER	BOILER ROOM C114	0.87		7.3		20	120	1	NO	YES	23	26	3/4"	2#12	1#12	21C1		1
	- BOILER CONTROL PANEL																		
	- BOILER EMERGENCY POWER OFF																		
CT	TRASH COMPACTOR	UTILITY YARD	4.00				20	460	3	NO	YES		26	3/4"	2#10	1#10	41C1		5
CP-1	HEATING/CHILLED WATER PUMP	BOILER ROOM C114		10.00			20	460	3	YES	YES	23	26	3/4"	4#12	1#12	41C1		
CP-2	HEATING/CHILLED WATER PUMP	BOILER ROOM C114		10.00			20	460	3	YES	YES	23	26	3/4"	4#12	1#12	41C1		
EF-A-RR	RESTROOM EXHAUST FAN	MECH A300		3/4	10.6		20	115	1	NO	YES	23	26	3/4"	2#12	1#12	22A1		4
EF-B-RR	RESTROOM EXHAUST FAN	MECH B300		3/4	10.6		20	115	1	NO	YES	23	26	3/4"	2#12	1#12	22B1		
EF-C-RR	RESTROOM EXHAUST FAN	KITCHEN		1/2	6.2		20	115	1	NO	YES	23	26	3/4"	2#12	1#12	21C1		4
EF-GREASE	GREASE EXHAUST FAN	KITCHEN - EXT WALL		3/4	10.6		20	115	1	NO	YES	23	26	3/4"	2#12	1#12	21C1		
EF-DISH	DISHWASHER HOOD EXHAUST	KITCHEN - EXT WALL		1/4	3.7		20	115	1	NO	YES	23	26	3/4"	2#12	1#12	21C1		4
RF-ADMIN	ADMIN RELIEF/RETURN FAN	MECH B300		1	2.1		20	460	3	YES	YES	23	26	3/4"	4#12	1#12	4LA2		
EF-ADMIN	ADMIN RESTROOMS	MECH B300		3/4	11.3		20	115	1	NO	YES	23	26	3/4"	2#12	1#12	22B1		
EF-IDF	IDF EXHAUST FAN	IDF A219		1/4	3.7		20	115	1	NO	YES	23	26	3/4"	2#12	1#12	IDF-2		
EF-MDF	MDF EXHAUST FAN	MDF B126		3/4	10.6		20	115	1	NO	YES	23	26	3/4"	2#10	1#10	MDF		
EF-ELEC	ELECTRICAL EXHAUST FAN	ELECTRICAL C116		1/2	6.2		20	115	1	NO	YES	23	26	3/4"	2#10	1#10	21C1		
EF-KILN	KILN FAN	CUST C113		1/5	5.2		20	115	1	NO	YES	-	26	3/4"	2#10	1#10	21C1		
EF-B-DRY	CLOTHS DRYER	HEALTH B113		1/10	1.0		20	115	1	NO	YES	-	26	3/4"	2#12	1#12	21SBB1		
EF-C-DRY	CLOTHS DRYER	CUST C113		1/10	1.0		20	115	1	NO	YES	-	26	3/4"	2#12	1#12	21C1		
TP-101	ELECTRONIC TRAP PRIMING MANIFOLD	JANITOR CLOSET C107					20	120	1	NO	YES	22	26	3/4"	2#12	1#12	2K1		
TP-102	ELECTRONIC TRAP PRIMING MANIFOLD	BOILER ROOM C114					20	120	1	NO	YES	22	26	3/4"	2#12	1#12	21C1		
TP-201	ELECTRONIC TRAP PRIMING MANIFOLD	TOILET A222					20	120	1	NO	YES	22	26	3/4"	2#12	1#12	22A1		
TP-301	ELECTRONIC TRAP PRIMING MANIFOLD	MECH B300					20	120	1	NO	YES	22	26	3/4"	2#12	1#12	22B2		
GWH-101 (GWH-1)	GAS WATER HEATER	BOILER ROOM C114					20	120	1	NO	YES		26	3/4"	2#12	1#12	21C1		
GWH-102 (GWH-2)	GAS WATER HEATER	BOILER ROOM C114					20	120	1	NO	YES		26	3/4"	2#12	1#12	21C1		
SV-101	GAS SOLENOID VALVE	BOILER ROOM C114								NO	YES								2
SV-102	GAS SOLENOID VALVE	BOILER ROOM C114								NO	YES								2
RHWP-101	RECIRCULATING WATER PUMP	BOILER ROOM C114		1/6	4.4		20	120	1	NO	YES	22	26	3/4"	2#12	1#12	21C1		
RHTWP-101	RECIRCULATING WATER PUMP HTW	BOILER ROOM C114		1/12	2.2		20	120	1	NO	YES	22	26	3/4"	2#12	1#12	21C1		
RWTS-101	RAINWATER TREATMENT SKID	BOILER ROOM C114		5.00	13.4		20	480	3	NO	YES	22	22	3/4"	2#12	1#12	41C1		
RWTP-101	RAINWATER TRANSFER PUMP	RAIN WATER CISTERN (SITE)		1/2	9.8		20	120	1	NO	YES	22	22	3/4"	2#10	1#10	21C1		
SP-101	SUMP PUMP	ELEVATOR PIT		1/2	9.8		20	120	1	NO	YES	22	22	3/4"	2#12	1#12	21SBB1		
HEAT TRACE	HEAT TRACE	CHILLER PIPING			5.0		20	208	1	NO	YES	-	26	3/4"	2#12	1#12	21SBC1		
WELL PUMP		SITE WELL		10.00				480	3	NO	YES		26	3/4"	3#10	1#10	41C1		3
RE-CIRCULATION PUMP		SITE WELL		1/3				120	1	NO	YES		26	3/4"	2#12	1#12	21C1		3

GENERAL NOTES:

1. REFER TO ONE-LINE DIAGRAM OR PANEL SCHEDULES FOR OVERCURRENT PROTECTION CHARACTERISTICS AND CIRCUIT NUMBERS.
2. COORDINATE ALL EQUIPMENT CONNECTION REQUIREMENTS WITH INSTALLING CONTRACTOR PRIOR TO THE INSTALLATION OF ANY ELECTRICAL WORK.
3. VFD'S ARE FURNISHED BY DIVISION 23. INSTALL VFD AND PROVIDE PROVIDE LINE AND LOAD SIDE FEEDERS IN ELECTRICAL WORK.
4. COMBINATION STARTER/DISCONNECTS AND DISCONNECT SWITCHES SHALL BE LOCATED WITHIN SIGHT OF AND ADJACENT TO EQUIPMENT SERVED. COORDINATE INSTALLATION WITH EQUIPMENT INSTALLER.
5. NOT ALL EQUIPMENT IDENTIFIED HERE IS SHOWN ON FLOOR PLANS. REFER TO DRAWINGS IN OTHER DISCIPLINES FOR EQUIPMENT LOCATIONS.

NOTES:

1. ELECTRICAL CONTRACTOR TO PROVIDE EPO BUTTONS FOR BOILERS. REFER TO MECHANICAL DRAWINGS FOR EXACT LOCATIONS. PROVIDE 2#12, 1#12 CU GRD IN 3/4" CONDUIT FROM PANEL 21C1.
2. ELECTRICAL CONTRACTOR TO PROVIDE RACEWAY BETWEEN PUSH BUTTON AND VALVES FOR LV CONTROL. REFER TO PLUMBING DRAWINGS FOR EXACT LOCATIONS
3. PROVIDE ADDITIONAL (1) - 1"C SPARE AND (1) - 1"C FOR CONTROL CIRCUITRY BETWEEN WELL PUMP AND WELL PUMP CONTROLLER. VERIFY CIRCUITRY WITH SYSTEM PROVIDER.
4. PROVIDE CONNECTION TO ASSOCIATED MOTORIZED DAMPER FROM THE EXHAUST FAN CIRCUIT.
5. COORDINATE CONTROL AND ADDITIONAL REQUIREMENTS WITH VENDOR. ALL ROUTING SHALL BE UNDERGROUND UNLESS OTHERWISE NOTED. IN ADDITIONAL, PROVIDE 120V CONNECTION TO CONTROL FROM PANEL 21C1.
6.. SMOKE DETECTION AND FAN SHUT DOWN REQUIRED.
7. PROVIDE 120V FOR CHILLER HEAT TRACE FROM PANEL 21SBC1. PROVIDE 2#12 CU, 1#12 CU GRD IN 3/4" CONDUIT.

1 M/E COORDINATION SCHEDULE
NONE

PRINTED ON: 2/11/2016 4:11:53 PM FROM FILE: C:\Revit Local Files\13-1533 MEP15\13-1533 MEP15_karol.kluczynski.rvt

PIVOT ARCHITECTURE

REGISTERED PROFESSIONAL ENGINEER 11612 OREGON JULY 15, 1987 STEPHEN J. TURNAK 02.09.16 EXPIRES: 6-30-16

IBI GROUP

PAE Portland | San Francisco | Seattle pae-engineers.com

BID SET

EUGENE SCHOOL DISTRICT 4J
120 WEST HILLEARD AVENUE, EUGENE, OREGON 97404
RIVER ROAD / EL CAMINO DEL RIO ELEMENTARY SCHOOL

SCHEDULES - ELECTRICAL

PROJECT #:	1537.00
ISSUE DATE:	2.12.2016
DRAWN:	SC
CHECKED:	PIC
REVISIONS:	

E701

© 2014 PIVOT ARCHITECTURE

PRINTED ON: 2/11/2016 4:16:58 PM FROM FILE: C:\Revit Local Files\13-1533 MEP15\13-1533 MEP15_karol.kluczynski.rvt

LIGHTING RELAY SCHEDULE

LOAD INFORMATION				POWER PANEL INFORMATION			INPUT CONTROLLING DEVICES					NOTES
LIGHTING RELAY DESIGNATION	RELAY	LOAD (VA)	DESCRIPTION	PANEL	CIRCUIT	EMERGENCY SOURCE	LV SWITCHED	LV SWITCH(S) CONTROLLING RELAY	PHOTO CELL	TIMECLOCK	OCCUPANCY SENSOR	
LCP-1C	r101	280	WEST EXTERIOR BOLLARD LIGHTS	41LSC1	4	Y	N		N	Y	N	2
LCP-1C	r102	225	WEST EXTERIOR POLE LIGHTS	41LSC1	4	Y	N		N	Y	N	2
LCP-1C	r103	225	WEST EXTERIOR POLE LIGHTS	41LSC1	4	Y	N		N	Y	N	2
LCP-1C	r104	400	WEST EXTERIOR PLAY AREA	41LSC1	6	Y	Y	sa108	N	Y	N	2,3
LCP-1C	r105	-	SPARE									
LCP-1C	r106	150	EAST CANOPY LIGHTS	41LSC1	6	Y	N		N	Y	N	2
LCP-1C	r107	280	EAST EXTERIOR PARKING LOT LIGHTING	41LSC1	6	Y	N		N	Y	N	2
LCP-1C	r108	280	EAST EXTERIOR PARKING LOT LIGHTING	41LSC1	8	Y	N		N	Y	N	2
LCP-1C	r109	140	EAST EXTERIOR POLE LIGHTS	41LSC1	8	Y	N		N	Y	N	2
LCP-1C	r110	140	EAST EXTERIOR POLE LIGHTS	41LSC1	8	Y	N		N	Y	N	2
LCP-1C	r111	100	NORTH EXTERIOR SIGN LIGHT	41LSC1	10	Y	N		N	Y	N	2
LCP-1C	r112	-	SPARE									
LCP-1C	r113	60	EAST CANOPY EMERGENCY LIGHTS	41LSB1	6	Y	N		N	Y	N	2
LCP-1C	r114	192	WEST EXTERIOR EMERGENCY WALL LIGHTS	41LSB1	6	Y	N		N	Y	N	2
LCP-1C	r115	312	SOUTH EXTERIOR EMERGENCY WALL LIGHTS	41LSB1	6	Y	N		N	Y	N	2
MEDIA ROOM - NLIGHT	ra101	1089	LTG - MEDIA ROOM	42B1	15	N	Y	sa101,sa102,sa103	Y	N	Y	1,4
MEDIA ROOM - NLIGHT	ra102	396	LTG - MEDIA ROOM	42B1	15	N	Y	sa101,sa102,sa103	Y	N	Y	1,4
MEDIA ROOM - NLIGHT	ra103	297	LTG - MEDIA ROOM	42LSB1	9	Y	Y	sa101,sa102,sa103	Y	N	Y	1,4
MEDIA ROOM - NLIGHT	ra104	990	LTG - MEDIA ROOM	42LSB1	9	Y	Y	sa101,sa102,sa103	Y	N	Y	1,4
GYM - NLIGHT	ra121	1250	LTG - GYM C100	42B1	17	N	Y	sa104,sa105	Y	N	Y	3,4
GYM - NLIGHT	ra122	1250	LTG - GYM C100	42B1	17	N	Y	sa104,sa105	Y	N	Y	3,4
CAFETERIA - NLIGHT	ra123	1000	LTG - CAFETERIA C101	42B1	19	N	Y	sa106,sa107	Y	N	Y	3,4
CAFETERIA - NLIGHT	ra124	1500	LTG - CAFETERIA C101 EMERGENCY	42LSB1	11	Y	Y	sa106,sa107	Y	N	Y	3,4
GYM - NLIGHT	ra125	2000	LTG - GYM C100 EMERGENCY	42LSB1	13	Y	Y	sa104,sa105	Y	N	Y	3,4

GENERAL NOTES:

A. SWITCH LOCATIONS/PLATES WITH SEVERAL GANGED TOGETHER SWITCHES SHALL BE DESIGNATED WITH THE TYPICAL SWITCH IDENTIFIER (sa) WITH A SWITCH QUANTITY ADDED TO THE END, EXAMPLE: sa-4 = A SWITCH LOCATION WITH 4 LOW VOLTAGE SWITCHES, THE FOUR SWITCHES WILL BE DESIGNATED AS sa-1, sa-2, sa-3, sa-4 ON THE SCHEDULE.
B. RELAYS ON A EMERGENCY POWER SOURCE SHALL BE IN A SEPARATE COMPARTMENT WITHIN THE LCP PANEL PER CODE.
C. REFER TO LIGHTING CONTROL INTERFACE DETAIL ON SHEET 3/E502 FOR ADDITIONAL INFORMATION.
D. PROVIDE SPRING TIMER FOR OVERRIDE OF PARKING LOT LIGHTS - VIA DDC SYSTEM.
E. REFER TO SPEC SECTION 26 09 43 NETWORK LIGHTING CONTROLS.
F. SWEEP LIGHTING ON AT 6AM, SWEEP OFF AT 11PM. USE OWNER PROVIDED SCHEDULE FOR INTEGRAL SPACES.
G. PROVIDE UL924 DEVICES FOR RELAYS ON EMERGENCY POWER.

NOTES:

1. TIMECLOCK INPUT SIGNAL PROVIDED VIA NLIGHT SYSTEM.
2. TIMECLOCK INPUT SIGNAL PROVIDED VIA DDC SYSTEM (BY OTHERS). SHOWN FOR REFERENCE ONLY.
3. PROVIDE 2 HRS SPRING TIMER SWITCH INSTEAD OF LV SWITCH.
4. PROVIDE DIMMING SWITCHES FOR INDICATED ZONES.

1 LIGHTING RELAY SCHEDULE

NONE

PIVOT ARCHITECTURE

REGISTERED PROFESSIONAL ENGINEER 11612 OREGON JULY 15, 1982 STEPHEN J. TURNAK 02-09-16

EXPIRES 6-30-16

IBI GROUP

dowa

PAE
Portland | San Francisco | Seattle
pae-engineers.com

BID SET

4J EUGENE SCHOOL DISTRICT 4J
120 WEST HILLEARD AVENUE, EUGENE, OREGON 97404
RIVER ROAD / EL CAMINO DEL RIO ELEMENTARY SCHOOL

SCHEDULES - ELECTRICAL

PROJECT #	1337.00
ISSUE DATE	2.12.2016
DRAWN	SC
CHECKED	PIC

REVISIONS

E702

© 2015 PIVOT ARCHITECTURE

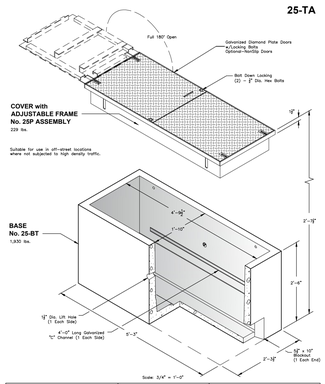

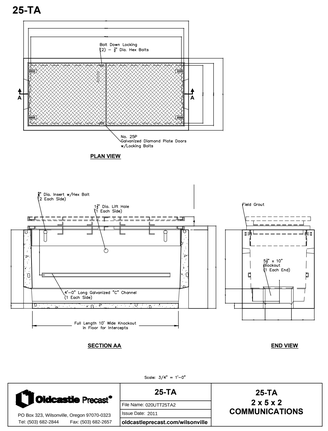

2 MEET ME VAULT 25-TA
T1.00 AS NOTED

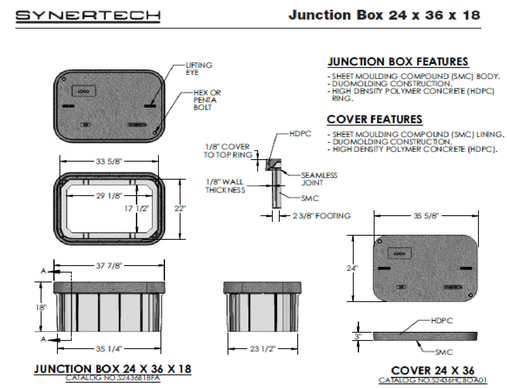

2 JUNCTION BOX / PULL BOX
T1.00 AS NOTED

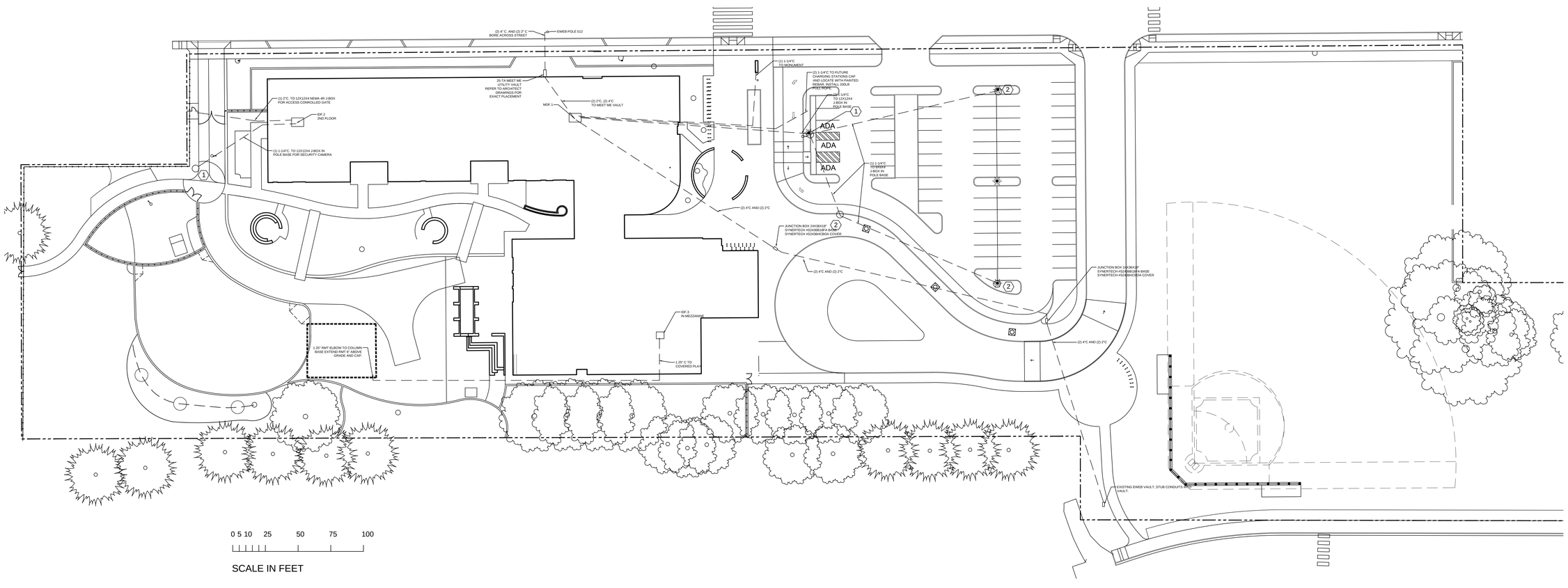

KEYED NOTES:

1. PROVIDE (1) CARLON E1212C24 POLE BASE J-BOX WITH ELECTRICAL DIVIDER.
2. PROVIDE (1) CARLON E88C24 POLE BASE J-BOX.

GENERAL NOTES:

1. ALL UNDERGROUND CONDUIT SHALL BE PVC SCHEDULE 40 UNLESS OTHERWISE NOTED.
2. PROVIDE #10 COPPER FOR FUTURE LOCATE. COIL 12" AT EACH PULL VAULT.

SITE PLAN
1/32"=1'-0"

PIVOT ARCHITECTURE

REGISTERED COMMUNICATIONS DISTRIBUTION DESIGNER
Bicsi
DARREN D HUFFACK
Reg. No. 17120053
Expires 12-31-17
SIGNATURE

NORTHWEST INFORMATION SERVICES
4380 SW GRIFFITH DRIVE, SUITE 250
BEAVERTON, OREGON 97005
PHONE: 503-296-4625 WWW.NISPDX.COM

BID DOCUMENT SET

Eugene School District
44 W. BROADWAY ST. EUGENE, OREGON
River Road / El Camino del Rio Elementary

SITE PLAN

PROJECT #:	1337.00
ISSUE DATE:	10 FEB 2016
DRAWN:	RDH
CHECKED:	GES
REVISIONS:	

T1.00

© 2015 PIVOT ARCHITECTURE

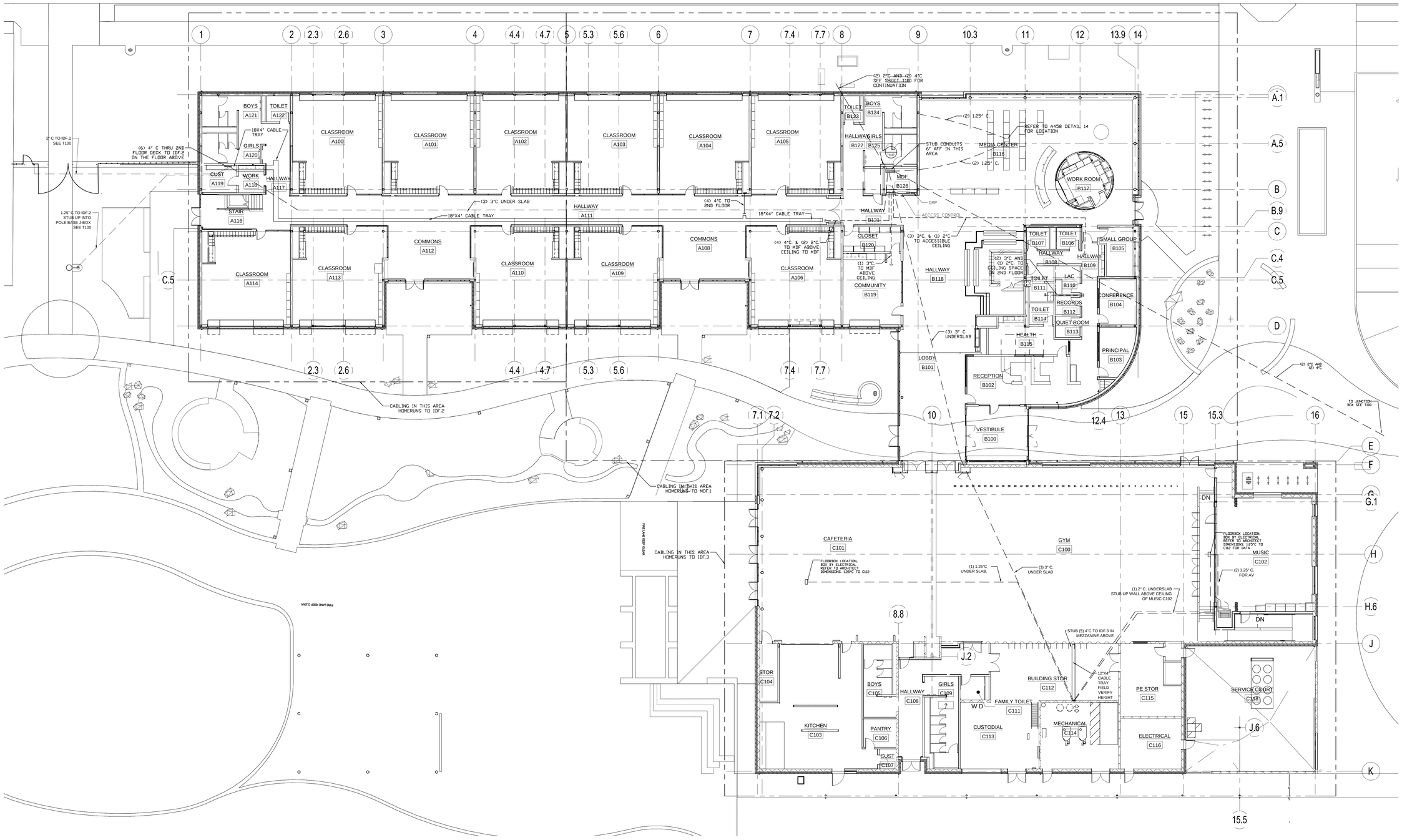

OVERALL FIRST FLOOR PLAN
5/64" = 1'-0"

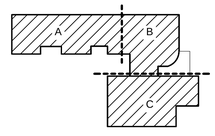

KEY PLAN

PIVOT ARCHITECTURE

REGISTERED COMMUNICATIONS DISTRIBUTION DESIGNER
BICSI
DARREN D HERNICK
REG. NO. 17205053
EXPIRES 10-31-17
SIGNATURE

NORTHWEST INFORMATION SERVICES
4900 SW GRIFFITH DRIVE, SUITE 250
BEAVERTON, OREGON 97005
PHONE:(503)646-8888 WWW.NISPDX.COM

BID DOCUMENT SET

Eugene School District
4 W. BROADWAY ST. EUGENE, OREGON

River Road / El Camino del Río Elementary

OVERALL FIRST FLOOR

PROJECT #:	1337.00
ISSUE DATE:	10 FEB 2016
DRAWN:	DDH
CHECKED:	GES

REVISIONS:

T1.01

© 2015 PIVOT ARCHITECTURE

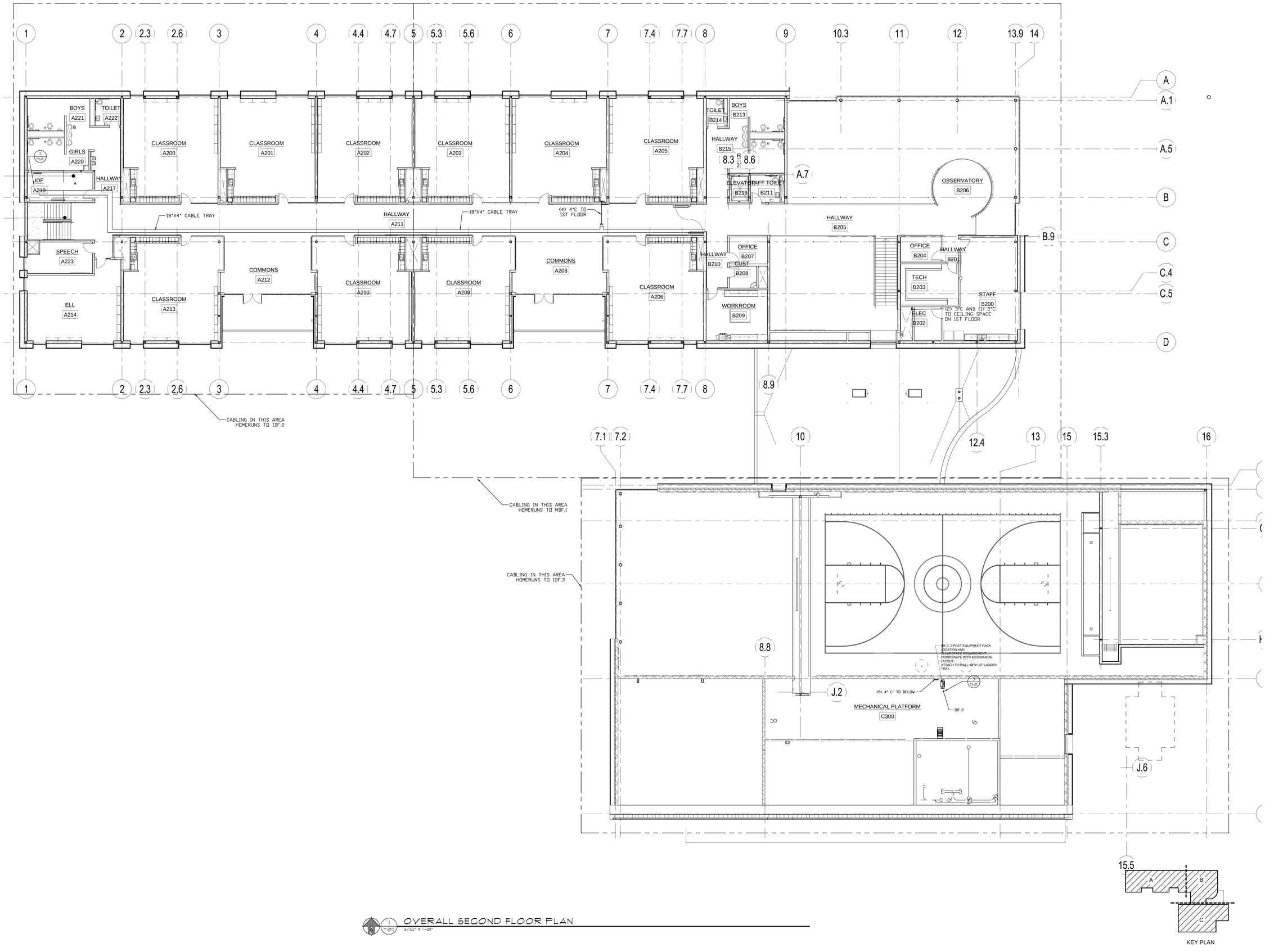

OVERALL SECOND FLOOR PLAN
3/32" = 1'-0"

PIVOT ARCHITECTURE

REGISTERED COMMUNICATIONS DISTRIBUTION DESIGNER
BICSI
DARREN D HERRICK
REG. No. 17200053
EXPIRES 12-31-17
SIGNATURE

NORTHWEST INFORMATION SERVICES
4900 SW GRIFFITH DRIVE, SUITE 250
BEAVERTON, OREGON 97005
PHONE: (503) 626-4283 WWW.NISPDX.COM

BID DOCUMENT SET

Eugene School District
4J
4J W. BROADWAY ST. EUGENE, OREGON
River Road / El Camino del Rio Elementary

OVERALL SECOND FLOOR PLAN

PROJECT #	1337.00
ISSUE DATE:	10 FEB 2016
DRAWN:	DDH
CHECKED:	GES
REVISIONS:	

T1.02

© 2015 PIVOT ARCHITECTURE

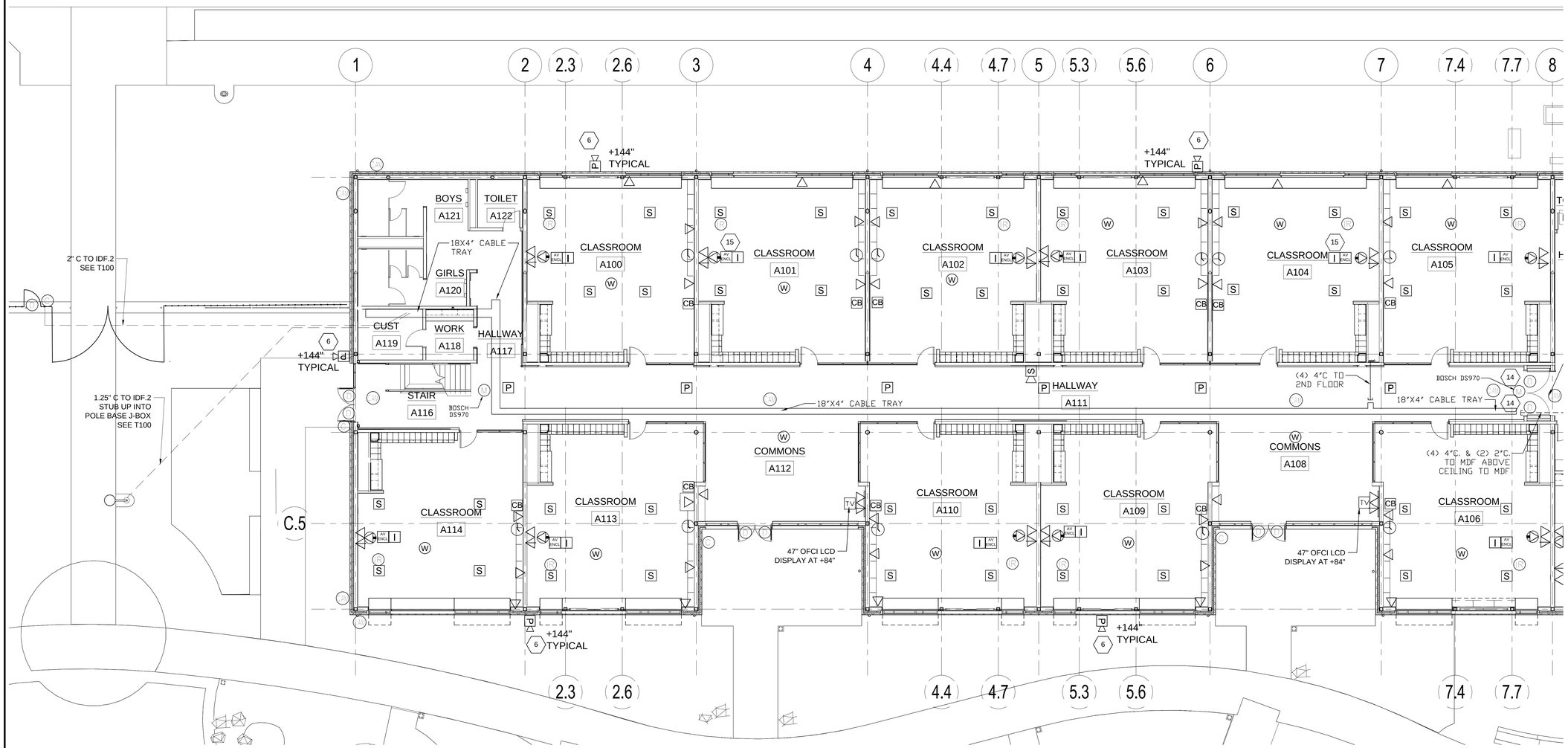

PARTIAL FIRST FLOORPLAN - SECTOR A

1/8" = 1'-0"

PLAN SYMBOL LEGEND

- SINGLE DATA LOCATION FOR CCTV MOUNT AT 15'-0" UNLESS OTHERWISE NOTED. PROVIDE (1) CATEGORY 6A BLUE CABLE.
- DUAL DATA LOCATION. PROVIDE (2) CATEGORY 6A BLUE CABLES.
- TRIPLE DATA LOCATION, (3) CATEGORY 6A BLUE CABLES.
- PRESENTER LOCATION. PROVIDE (1) PRE-TERMINATED MINI-AUDIO, VGA VIDEO CABLE TO SHORT THROW PROJECTOR. PROVIDE (1) PRE-TERMINATED HDMI CABLE TO SHORT THROW PROJECTOR AND LCD FLAT PANEL.
- (W) WIRELESS ACCESS POINT. (2) CATEGORY 6A YELLOW CABLE. COIL 20' SLACK LOOP AT LOCATION INDICATED. TERMINATE IN 2-PORT MODULAR JACK BOX AMP # 1116697-1 OR EQUAL. CEILING MOUNTED UNLESS OTHERWISE NOTED.
- (CA) CAMERA LOCATION AT 16' AFF FOR EXTERIOR, CEILING MOUNT FOR INTERIOR. PROVIDE (1) CATEGORY 6A GREEN CABLE. PROVIDE WP COVER AND COIL 12" SLACK IN EXTERIOR BOXES.
- OWNER FURNISHED SHORT THROW DISPLAY. INSTALL OWNER FURNISHED PROJECTOR AND MOUNT. PROVIDE (1) CATEGORY 6A BLUE CABLE TO THE NEAREST IDF/MDF. SEE TELECOM DETAILS.
- AV ENCL — 24x24 CEILING ENCLOSURE FOR AV/PAGING/CONTROLS. PROVIDE (4) CATEGORY 6A CABLES TO NEAREST TELECOM ROOM.
- TV — OWNER FURNISHED CONTRACTOR INSTALLED 47" LCD TV AND MOUNT, UNLESS OTHERWISE NOTED. PROVIDE (2) CATEGORY 6A CABLES. PROVIDE AMX DIGITAL SIGNAGE PLAYER BEHIND OFCI DISPLAY.
- P — WALL MOUNT PAGING SPEAKER PROVIDE 18AWG GRAY SHIELDED TWISTED PAIR CABLE. UP TO 10 SPEAKERS MAY BE CONNECTED IN SERIES.
- P — CEILING MOUNT PAGING SPEAKER PROVIDE 18AWG GRAY SHIELDED TWISTED PAIR CABLE. UP TO 10 SPEAKERS MAY BE CONNECTED IN SERIES. REFER TO ARCHITECT REFLECTED CEILING PLAN FOR EXACT PLACEMENT.
- I — CEILING MOUNT INTERCOM SPEAKER PROVIDE 22/4 GRAY SHIELDED CABLE TO THE AMX ENCLOSURE. REFER TO ARCHITECT REFLECTED CEILING PLAN FOR EXACT PLACEMENT.
- CB — 8-BUTTON AMX KEYPAD CONTROL AND CALL BUTTON. CONNECT TO ADJACENT CATEGORY 5E GRAY CABLE TO NEAREST CLASSROOM 8-BUTTON AMX KEYPAD OR AS NOTED.
- S — CEILING MOUNTED VOICE RE-ENFORCEMENT SPEAKER. REFER TO ARCHITECT REFLECTED CEILING PLAN FOR EXACT PLACEMENT.
- SURFACE MOUNTED 12" ANALOG CLOCK AT 96" AFF. UNLESS OTHERWISE NOTED
- (IR) CEILING MOUNTED IR SENSOR FOR CLASSROOM SOUND SYSTEMS. PROVIDE CATEGORY 6 CABLE TO THE CLASSROOM AMPLIFIER.
- (D) DOOR CONTACT - PROVIDE 1/2" CONDUIT TO DOOR FRAME. INSTALL OWNER FURNISHED ORANGE 22/2 CABLE TO THE SECURITY PANEL OR ZONE EXPANDER.
- (P) ACCESS PINPAD PROVIDE 1/2" CONDUIT TO DOUBLE GANG BOX AT +48" AFF. INSTALL OWNER FURNISHED ORANGE 22AWG 3-PAIR, CONNECT-AIR OR APPROVED TO THE ACCESS PANEL OR ZONE EXPANDER. REFER TO KEYED NOTE FOR PINPAD TYPE. PIN PAD LOCATIONS MUST BE SEPARATED BY A MINIMUM OF 12" O.C. TO PREVENT FALSE CARD READS.
- (M) MOTION SENSOR -PROVIDE 1/2" CONDUIT TO SINGLE GANG BOX AT +108" AFF. INSTALL OWNER FURNISHED ORANGE 22/4 TO THE INTRUSION PANEL OR ZONE EXPANDER.
- (R) CARD READER - PROVIDE 3/4" CONDUIT TO SINGLE GANG BOX AT +48" AFF. COORDINATE DEVICES PLACEMENT WITH DOOR INSTALLER AS SOME DEVICES MAY BE LOCATED ON DOOR MULLIONS. INSTALL OWNER FURNISHED ORANGE 22AWG 4-PAIR SHIELDED TO THE ACCESS PANEL.
- S — SECURITY SYSTEM SIREN, INSTALL OWNER FURNISHED ORANGE 16/2 TO INTRUSION PANEL
- (K) DMP SECURITY KEYPAD PROVIDE 1/2" CONDUIT TO DOUBLE GANG BOX AT +48" AFF. INSTALL OWNER FURNISHED ORANGE 18/4 TO THE SECURITY PANEL.

(X) KEYED NOTES:

1. INSTALL OWNER FURNISHED NON-METALLIC COVER
2. ARMING/DISARMING KEYPAD LOCATION, GREY. HID5355AGK09. MAINTAIN 12" CLEAR BETWEEN ARMING AND DOOR CONTROL PINPADS.
3. DOOR CONTROL KEYPAD LOCATION, WHITE. HID5355ABK09. PINPAD CONTROL OF LOCK AT MAIN OFFICE VESTIBULE ENTRY.
4. LOCK DOWN INITIATION BUTTON.
5. PROVIDE RACEWAY TO ACCESSIBLE CEILING SPACE IN B115
6. PROVIDE 12X12X4 BACKBOX AND 1/2" C. TO ACCESSIBLE SPACE FOR WALL MOUNTED PAGING SPEAKER. MOUNT AT 108" AFF UNLESS OTHERWISE NOTED.
7. FLOORBOX LOCATION. CONNECT HDMI AND VGA TO PRESENTER LOCATION. PROVIDE (2) CAT 6A CABLES TO MDF.
8. REFER TO ARCHITECT ELEVATIONS FOR DEVICE PLACEMENT ON MEDIA CENTER WALL.
9. MULTI-PURPOSE VIDEO CONNECTION.
10. TORMAX MOTORIZED SLIDING DOOR, PROVIDE DOOR CONTACTS AND CONNECTION. PROVIDE CAMDEN CM25/3 AND LOCAL REX FOR DOORS (4) TOTAL AT VESTIBULE B100.
11. PROVIDE (2) 1"C FROM PRESENTER LOCATION TO CEILING OF MUSIC ROOM FOR PROJECTOR AV CABLING.
12. PROVIDE CAT 6A TO NEAREST TELECOM ROOM. INSTALL OWNER FURNISHED MOUNT AND LCD TV.
13. DOORS SHALL BE CONNECTED TO A TIMED UNLOCK.
14. MAGNETICALLY HELD DOOR, 16/2 ORANGE TO NEAREST ACCESS CONTROL PANEL, HOLD OPEN POWER SUPPLY AND MAGNETIC DOOR HOLDER BY ELECTRICAL AND DIVISION 8. LOCATE POWER SUPPLY IN MDF AS SHOWN ON T5.01.
15. HOMERUN AMX AX-LINK CABLE TO NEAREST NX-12OO CONTROLLER.

GENERAL NOTES:

1. CCTV SECURITY CAMERAS CABLING AND ROUGH IN ONLY. CAMERA, HARDWARE AND SOFTWARE IS BY OTHERS.
2. CLASSROOM SOUND SYSTEMS INCLUDE A CEILING OR WALL MOUNTED INFRA RED SENSOR. PROVIDE 1 PER EQUIPPED ROOM. COORDINATE WITH ARCHITECT REFLECTED CEILING PLANS, AVOID PLACEMENT WHERE INTERFERENCE FROM OTHER CLASSROOM SPACES WILL OCCUR.
3. PROVIDE (1) 20AWG 4 CONDUCTOR CABLE BETWEEN MOTORIZED SHADE CONTROLLERS . PROVIDE (1) 20 AWG 4 CONDUCTOR FROM SHADE GROUP CONTROLLERS TO THE NEAREST ACCESS CONTROL PANEL..
4. ALL EXTERIOR DOORS SHALL RECEIVE A DOOR POSITION INDICATOR (DOOR CONTACT) WITH 22AWG 2 CONDUCTOR ORANGE CABLE TO THE NEAREST SECURITY PANEL OR ZONE EXPANDER.
5. PROVIDE (2) 2" SLEEVE FROM CORRIDORS TO EACH CLASSROOM CEILING SPACE FOR DATA AND INTERCOM CABLING.
6. PROVIDE (2) 1" SLEEVE FROM CORRIDORS TO EACH STAFF OFFICE, WORK AREA AND AS REQUIRED FOR PATHWAY FOR INTERCOM AND DATA LOCATIONS.
7. ORANGE SECURITY CABLE IS OWNER FURNISHED AND CONTRACTOR INSTALLED. CONTRACTOR IS TO PROVIDE PROJECTED AMOUNT OF CABLE NEEDED BY CONDUCTOR SIZE AND COUNT A MINIMUM OF (4) WEEKS BEFORE INSTALLATION IS SCHEDULED TO COMMENCE.
8. PROVIDE APPROPRIATELY SIZED WIREMESH CAGES FOR DEVICES MOUNTED IN THE GYM AND COMMONS.

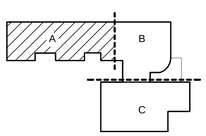

KEY PLAN

PIVOT ARCHITECTURE

Bicsi — Darren D Hennick, Reg. No. 1720059, Expires 10-31-17

NORTHWEST INFORMATION SERVICES
4900 SW GRIFFITH DRIVE, SUITE 250
BEAVERTON, OREGON 97005
PHONE (503) 626-4125 WWW.NISPDX.COM

BID DOCUMENT SET

Eugene School District
44 W. BROADWAY ST. EUGENE, OREGON

River Road / El Camino del Rio Elementary

FIRST FLOOR PLAN
SECTOR - A

PROJECT #:	1337.00
ISSUE DATE:	10 FEB 2016
DRAWN:	DDH
CHECKED:	GES
REVISIONS:	

T1.11

© 2015 PIVOT ARCHITECTURE

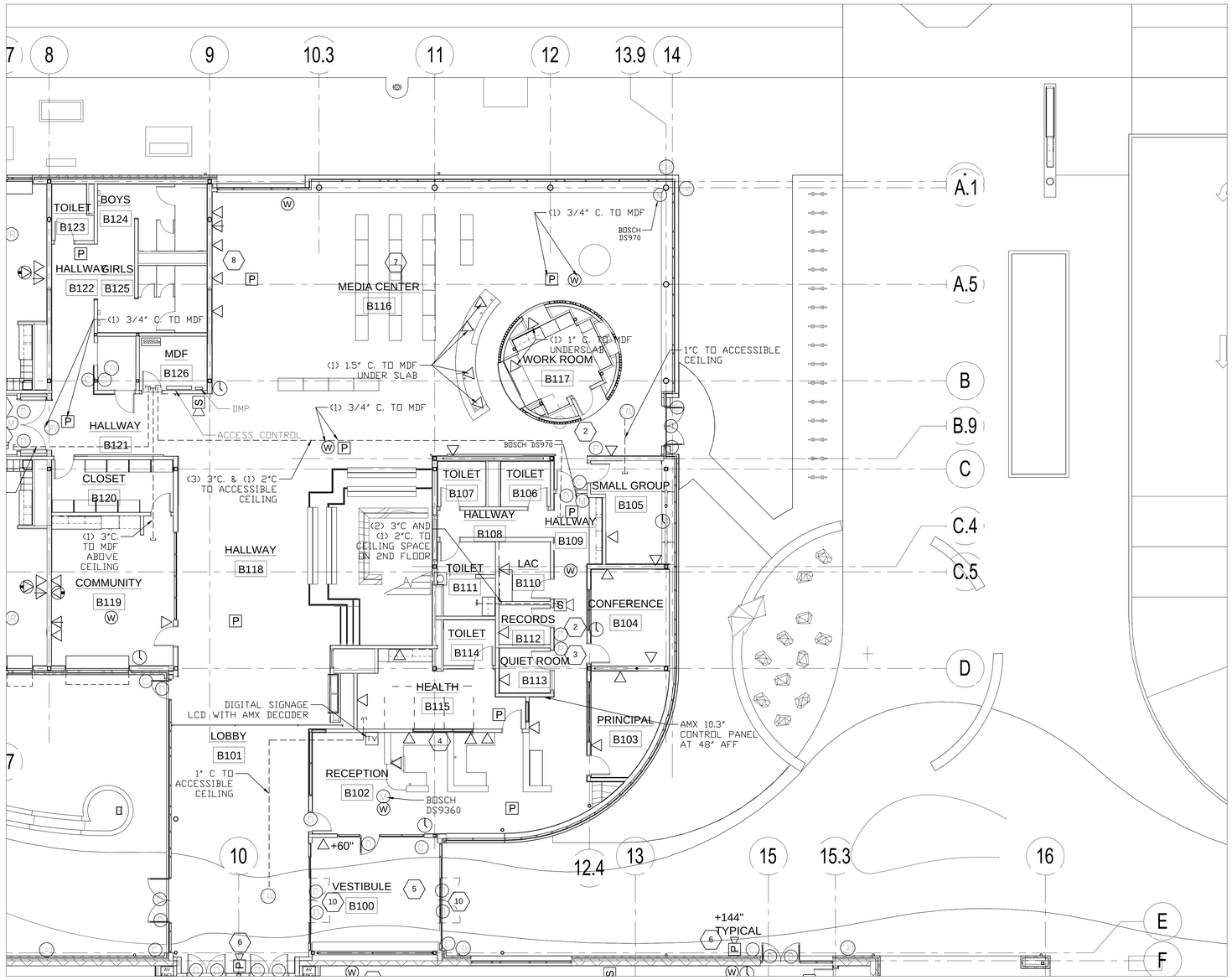

PARTIAL FIRST FLOORPLAN - SECTOR B
1/8" = 1'-0"

PLAN SYMBOL LEGEND

- SINGLE DATA LOCATION FOR CCTV MOUNT AT 15'-0" UNLESS OTHERWISE NOTED. PROVIDE (1) CATEGORY 6A BLUE CABLE.
- DUAL DATA LOCATION. PROVIDE (2) CATEGORY 6A BLUE CABLES.
- TRIPLE DATA LOCATION, (3) CATEGORY 6A BLUE CABLES.
- PRESENTER LOCATION. PROVIDE (1) PRE-TERMINATED MINI-AUDIO, VGA VIDEO CABLE TO SHORT THROW PROJECTOR. PROVIDE (1) PRE-TERMINATED HDMI CABLE TO SHORT THROW PROJECTOR AND LCD FLAT PANEL.
- (W) WIRELESS ACCESS POINT. (2) CATEGORY 6A YELLOW CABLE. COIL 20' SLACK LOOP AT LOCATION INDICATED. TERMINATE IN 2-PORT MODULAR JACK BOX AMP # 1116697-1 OR EQUAL. CEILING MOUNTED UNLESS OTHERWISE NOTED.
- (CA) CAMERA LOCATION AT 16' AFF FOR EXTERIOR, CEILING MOUNT FOR INTERIOR. PROVIDE (1) CATEGORY 6A GREEN CABLE. PROVIDE WP COVER AND COIL 12" SLACK IN EXTERIOR BOXES.
- OWNER FURNISHED SHORT THROW DISPLAY. INSTALL OWNER FURNISHED PROJECTOR AND MOUNT. PROVIDE (1) CATEGORY 6A BLUE CABLE TO THE NEAREST IDF/MDF. SEE TELECOM DETAILS.
- AV ENCL — 24x24 CEILING ENCLOSURE FOR AV/PAGING/CONTROLS. PROVIDE (4) CATEGORY 6A CABLES TO NEAREST TELECOM ROOM.
- TV — OWNER FURNISHED CONTRACTOR INSTALLED 47" LCD TV AND MOUNT, UNLESS OTHERWISE NOTED. PROVIDE (2) CATEGORY 6A CABLES. PROVIDE AMX DIGITAL SIGNAGE PLAYER BEHIND OFCI DISPLAY.
- P — WALL MOUNT PAGING SPEAKER PROVIDE 18AWG GRAY SHIELDED TWISTED PAIR CABLE. UP TO 10 SPEAKERS MAY BE CONNECTED IN SERIES.
- P — CEILING MOUNT PAGING SPEAKER PROVIDE 18AWG GRAY SHIELDED TWISTED PAIR CABLE. UP TO 10 SPEAKERS MAY BE CONNECTED IN SERIES. REFER TO ARCHITECT REFLECTED CEILING PLAN FOR EXACT PLACEMENT.
- I — CEILING MOUNT INTERCOM SPEAKER PROVIDE 22/4 GRAY SHIELDED CABLE TO THE AMX ENCLOSURE. REFER TO ARCHITECT REFLECTED CEILING PLAN FOR EXACT PLACEMENT.
- CB — 8-BUTTON AMX KEYPAD CONTROL AND CALL BUTTON. CONNECT TO ADJACENT CATEGORY SE GRAY CABLE TO NEAREST CLASSROOM 8-BUTTON AMX KEYPAD OR AS NOTED.
- S — CEILING MOUNTED VOICE RE-ENFORCEMENT SPEAKER. REFER TO ARCHITECT REFLECTED CEILING PLAN FOR EXACT PLACEMENT.
- SURFACE MOUNTED 12" ANALOG CLOCK AT 96" AFF. UNLESS OTHERWISE NOTED
- (IR) CEILING MOUNTED IR SENSOR FOR CLASSROOM SOUND SYSTEMS. PROVIDE CATEGORY 6 CABLE TO THE CLASSROOM AMPLIFIER.
- (D) DOOR CONTACT - PROVIDE 1/2" CONDUIT TO DOOR FRAME. INSTALL OWNER FURNISHED ORANGE 22/2 CABLE TO THE SECURITY PANEL OR ZONE EXPANDER.
- (P) ACCESS PINPAD PROVIDE 1/2" CONDUIT TO DOUBLE GANG BOX AT +48" AFF. INSTALL OWNER FURNISHED ORANGE 22AWG 3-PAIR, CONNECT-AIR OR APPROVED TO THE ACCESS PANEL OR ZONE EXPANDER. REFER TO KEYED NOTE FOR PINPAD TYPE. PIN PAD LOCATIONS MUST BE SEPARATED BY A MINIMUM OF 12" O.C. TO PREVENT FALSE CARD READS.
- (M) MOTION SENSOR -PROVIDE 1/2" CONDUIT TO SINGLE GANG BOX AT +108" AFF. INSTALL OWNER FURNISHED ORANGE 22/4 TO THE INTRUSION PANEL OR ZONE EXPANDER.
- (R) CARD READER - PROVIDE 3/4" CONDUIT TO SINGLE GANG BOX AT +48" AFF. COORDINATE DEVICES PLACEMENT WITH DOOR INSTALLER AS SOME DEVICES MAY BE LOCATED ON DOOR MULLIONS. INSTALL OWNER FURNISHED ORANGE 22AWG 4-PAIR SHIELDED TO THE ACCESS PANEL.
- (S) SECURITY SYSTEM SIREN, INSTALL OWNER FURNISHED ORANGE 16/2 TO INTRUSION PANEL
- (K) DMP SECURITY KEYPAD PROVIDE 1/2" CONDUIT TO DOUBLE GANG BOX AT +48" AFF. INSTALL OWNER FURNISHED ORANGE 18/4 TO THE SECURITY PANEL.

(X) KEYED NOTES:

1. INSTALL OWNER FURNISHED NON-METALLIC COVER
2. ARMING/DISARMING KEYPAD LOCATION, GREY. HID5355AGK09. MAINTAIN 12" CLEAR BETWEEN ARMING AND DOOR CONTROL PINPADS.
3. DOOR CONTROL KEYPAD LOCATION, WHITE. HID5355ABK09. PINPAD CONTROL OF LOCK AT MAIN OFFICE VESTIBULE ENTRY.
4. LOCK DOWN INITIATION BUTTON.
5. PROVIDE RACEWAY TO ACCESSIBLE CEILING SPACE IN B115
6. PROVIDE 12X12X4 BACKBOX AND 1/2" C. TO ACCESSIBLE SPACE FOR WALL MOUNTED PAGING SPEAKER. MOUNT AT 108" AFF UNLESS OTHERWISE NOTED.
7. FLOORBOX LOCATION. CONNECT HDMI AND VGA TO PRESENTER LOCATION. PROVIDE (2) CAT 6A CABLES TO MDF.
8. REFER TO ARCHITECT ELEVATIONS FOR DEVICE PLACEMENT ON MEDIA CENTER WALL.
9. MULTI-PURPOSE VIDEO CONNECTION.
10. TORMAX MOTORIZED SLIDING DOOR, PROVIDE DOOR CONTACTS AND CONNECTION. PROVIDE CAMDEN CM25/3 AND LOCAL REX FOR DOORS (4) TOTAL AT VESTIBULE B100.
11. PROVIDE (2) 1"C FROM PRESENTER LOCATION TO CEILING OF MUSIC ROOM FOR PROJECTOR AV CABLING.
12. PROVIDE CAT 6A TO NEAREST TELECOM ROOM. INSTALL OWNER FURNISHED MOUNT AND LCD TV.
13. DOORS SHALL BE CONNECTED TO A TIMED UNLOCK.
14. MAGNETICALLY HELD DOOR, 16/2 ORANGE TO NEAREST ACCESS CONTROL PANEL, HOLD OPEN POWER SUPPLY AND MAGNETIC DOOR HOLDER BY ELECTRICAL AND DIVISION 8. LOCATE POWER SUPPLY IN MDF AS SHOWN ON TS.01.
15. HOMERUN AMX AX-LINK CABLE TO NEAREST NX-12OO CONTROLLER.

GENERAL NOTES:

1. CCTV SECURITY CAMERAS CABLING AND ROUGH IN ONLY. CAMERA, HARDWARE AND SOFTWARE IS BY OTHERS.
2. CLASSROOM SOUND SYSTEMS INCLUDE A CEILING OR WALL MOUNTED INFRA RED SENSOR. PROVIDE 1 PER EQUIPPED ROOM. COORDINATE WITH ARCHITECT REFLECTED CEILING PLANS, AVOID PLACEMENT WHERE INTERFERENCE FROM OTHER CLASSROOM SPACES WILL OCCUR.
3. PROVIDE (1) 20AWG 4 CONDUCTOR CABLE BETWEEN MOTORIZED SHADE CONTROLLERS . PROVIDE (1) 20 AWG 4 CONDUCTOR FROM SHADE GROUP CONTROLLERS TO THE NEAREST ACCESS CONTROL PANEL..
4. ALL EXTERIOR DOORS SHALL RECEIVE A DOOR POSITION INDICATOR (DOOR CONTACT) WITH 22AWG 2 CONDUCTOR ORANGE CABLE TO THE NEAREST SECURITY PANEL OR ZONE EXPANDER.
5. PROVIDE (2) 2" SLEEVE FROM CORRIDORS TO EACH CLASSROOM CEILING SPACE FOR DATA AND INTERCOM CABLING.
6. PROVIDE (2) 1" SLEEVE FROM CORRIDORS TO EACH STAFF OFFICE, WORK AREA AND AS REQUIRED FOR PATHWAY FOR INTERCOM AND DATA LOCATIONS.
7. ORANGE SECURITY CABLE IS OWNER FURNISHED AND CONTRACTOR INSTALLED. CONTRACTOR IS TO PROVIDE PROJECTED AMOUNT OF CABLE NEEDED BY CONDUCTOR SIZE AND COUNT A MINIMUM OF (4) WEEKS BEFORE INSTALLATION IS SCHEDULED TO COMMENCE.
8. PROVIDE APPROPRIATELY SIZED WIREMESH CAGES FOR DEVICES MOUNTED IN THE GYM AND COMMONS.

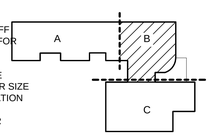

KEY PLAN

PIVOT ARCHITECTURE

Bicsi — Registered Communications Distribution Designer
Darren D Hennick
Reg. No. 17200951
Expires 10-31-17
Signature

NORTHWEST INFORMATION SERVICES
4900 SW GRIFFITH DRIVE, SUITE 250
BEAVERTON, OREGON 97005
PHONE:(503)626-6565 WWW.NISPDX.COM

BID DOCUMENT SET

Eugene School District
4J W. BROADWAY ST. EUGENE, OREGON

River Road / El Camino del Rio Elementary

FIRST FLOOR PLAN
SECTOR - B

PROJECT #:	1337.00
ISSUE DATE:	A 10 FEB 2016
DRAWN:	DDH
CHECKED:	GES
REVISIONS:	

T1.12

© 2015 PIVOT ARCHITECTURE

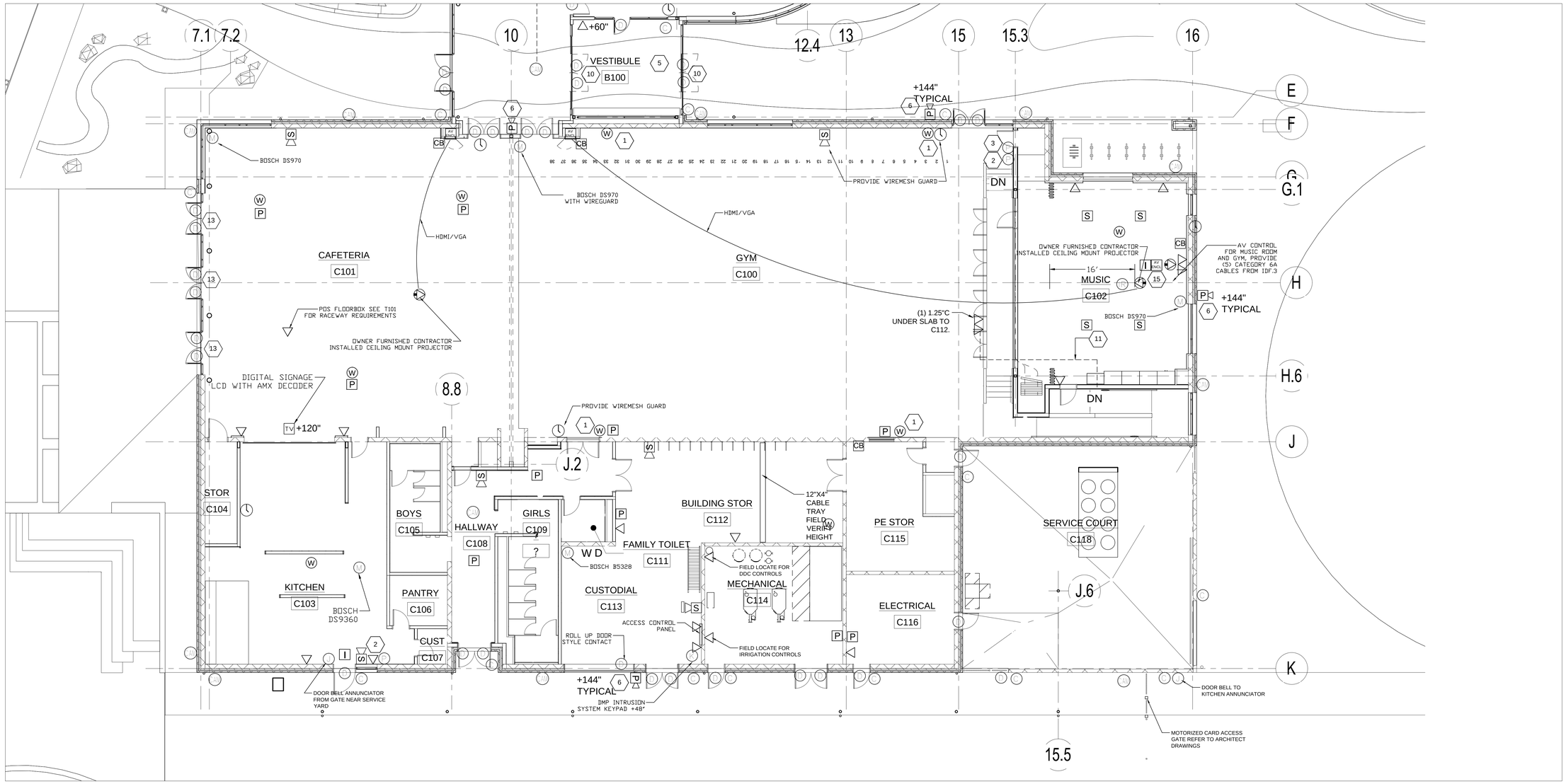

PARTIAL FIRST FLOORPLAN - SECTOR C

T1.3 1/8" = 1'-0"

PLAN SYMBOL LEGEND

- SINGLE DATA LOCATION FOR CCTV MOUNT AT 15'-0" UNLESS OTHERWISE NOTED. PROVIDE (1) CATEGORY 6A BLUE CABLE.
- DUAL DATA LOCATION. PROVIDE (2) CATEGORY 6A BLUE CABLES.
- TRIPLE DATA LOCATION, (3) CATEGORY 6A BLUE CABLES.
- PRESENTER LOCATION. PROVIDE (1) PRE-TERMINATED MINI-AUDIO, VGA VIDEO CABLE TO SHORT THROW PROJECTOR. PROVIDE (1) PRE-TERMINATED HDMI CABLE TO SHORT THROW PROJECTOR AND LCD FLAT PANEL.
- (W) WIRELESS ACCESS POINT. (2) CATEGORY 6A YELLOW CABLE. COIL 20' SLACK LOOP AT LOCATION INDICATED. TERMINATE IN 2-PORT MODULAR JACK BOX AMP # 1116697-1 OR EQUAL. CEILING MOUNTED UNLESS OTHERWISE NOTED.
- (M) CAMERA LOCATION AT 16' AFF FOR EXTERIOR, CEILING MOUNT FOR INTERIOR. PROVIDE (1) CATEGORY 6A GREEN CABLE. PROVIDE WP COVER AND COIL 12" SLACK IN EXTERIOR BOXES.
- OWNER FURNISHED SHORT THROW DISPLAY. INSTALL OWNER FURNISHED PROJECTOR AND MOUNT. PROVIDE (1) CATEGORY 6A BLUE CABLE TO THE NEAREST IDF/MDF. SEE TELECOM DETAILS.
- AV ENCL 24x24 CEILING ENCLOSURE FOR AV/PAGING/CONTROLS. PROVIDE (4) CATEGORY 6A CABLES TO NEAREST TELECOM ROOM.
- TV OWNER FURNISHED CONTRACTOR INSTALLED 47" LCD TV AND MOUNT, UNLESS OTHERWISE NOTED. PROVIDE (2) CATEGORY 6A CABLES. PROVIDE AMX DIGITAL SIGNAGE PLAYER BEHIND OFCI DISPLAY.
- (P) WALL MOUNT PAGING SPEAKER PROVIDE 18AWG GRAY SHIELDED TWISTED PAIR CABLE. UP TO 10 SPEAKERS MAY BE CONNECTED IN SERIES.
- (P) CEILING MOUNT PAGING SPEAKER PROVIDE 18AWG GRAY SHIELDED TWISTED PAIR CABLE. UP TO 10 SPEAKERS MAY BE CONNECTED IN SERIES. REFER TO ARCHITECT REFLECTED CEILING PLAN FOR EXACT PLACEMENT.
- (I) CEILING MOUNT INTERCOM SPEAKER PROVIDE 22/4 GRAY SHIELDED CABLE TO THE AMX ENCLOSURE. REFER TO ARCHITECT REFLECTED CEILING PLAN FOR EXACT PLACEMENT.
- (CB) 8-BUTTON AMX KEYPAD CONTROL AND CALL BUTTON. CONNECT TO ADJACENT CATEGORY 5E GRAY CABLE TO NEAREST CLASSROOM 8-BUTTON AMX KEYPAD OR AS NOTED.
- (S) CEILING MOUNTED VOICE RE-ENFORCEMENT SPEAKER. REFER TO ARCHITECT REFLECTED CEILING PLAN FOR EXACT PLACEMENT.
- SURFACE MOUNTED 12" ANALOG CLOCK AT 96" AFF. UNLESS OTHERWISE NOTED
- (R) CEILING MOUNTED IR SENSOR FOR CLASSROOM SOUND SYSTEMS. PROVIDE CATEGORY 6 CABLE TO THE CLASSROOM AMPLIFIER.
- (D) DOOR CONTACT - PROVIDE 1/2" CONDUIT TO DOOR FRAME. INSTALL OWNER FURNISHED ORANGE 22/2 CABLE TO THE SECURITY PANEL OR ZONE EXPANDER.
- (P) ACCESS PINPAD PROVIDE 1/2" CONDUIT TO DOUBLE GANG BOX AT +48" AFF. INSTALL OWNER FURNISHED ORANGE 22AWG 3-PAIR, CONNECT-AIR OR APPROVED TO THE ACCESS PANEL OR ZONE EXPANDER. REFER TO KEYED NOTE FOR PINPAD TYPE. PIN PAD LOCATIONS MUST BE SEPARATED BY A MINIMUM OF 12" O.C. TO PREVENT FALSE CARD READS.
- (M) MOTION SENSOR -PROVIDE 1/2" CONDUIT TO SINGLE GANG BOX AT +108" AFF. INSTALL OWNER FURNISHED ORANGE 22/4 TO THE INTRUSION PANEL OR ZONE EXPANDER.
- (R) CARD READER - PROVIDE 3/4" CONDUIT TO SINGLE GANG BOX AT +48" AFF. COORDINATE DEVICES PLACEMENT WITH DOOR INSTALLER AS SOME DEVICES MAY BE LOCATED ON DOOR MULLIONS. INSTALL OWNER FURNISHED ORANGE 22AWG 4-PAIR SHIELDED TO THE ACCESS PANEL.
- (S) SECURITY SYSTEM SIREN, INSTALL OWNER FURNISHED ORANGE 16/2 TO INTRUSION PANEL
- (K) DMP SECURITY KEYPAD PROVIDE 1/2" CONDUIT TO DOUBLE GANG BOX AT +48" AFF. INSTALL OWNER FURNISHED ORANGE 18/4 TO THE SECURITY PANEL.

(X) KEYED NOTES:

1. INSTALL OWNER FURNISHED NON-METALLIC COVER
2. ARMING/DISARMING KEYPAD LOCATION, GREY. HID5355AGK09. MAINTAIN 12" CLEAR BETWEEN ARMING AND DOOR CONTROL PINPADS.
3. DOOR CONTROL KEYPAD LOCATION, WHITE. HID5355ABK09. PINPAD CONTROL OF LOCK AT MAIN OFFICE VESTIBULE ENTRY.
4. LOCK DOWN INITIATION BUTTON.
5. PROVIDE RACEWAY TO ACCESSIBLE CEILING SPACE IN B115
6. PROVIDE 12X12X4 BACKBOX AND 1/2" C. TO ACCESSIBLE SPACE FOR WALL MOUNTED PAGING SPEAKER. MOUNT AT 108" AFF UNLESS OTHERWISE NOTED.
7. FLOORBOX LOCATION. CONNECT HDMI AND VGA TO PRESENTER LOCATION. PROVIDE (2) CAT 6A CABLES TO MDF.
8. REFER TO ARCHITECT ELEVATIONS FOR DEVICE PLACEMENT ON MEDIA CENTER WALL.
9. MULTI-PURPOSE VIDEO CONNECTION.
10. TORMAX MOTORIZED SLIDING DOOR, PROVIDE DOOR CONTACTS AND CONNECTION. PROVIDE CAMDEN CM25/3 AND LOCAL REX FOR DOORS (4) TOTAL AT VESTIBULE B100.
11. PROVIDE (2) 1"C FROM PRESENTER LOCATION TO CEILING OF MUSIC ROOM FOR PROJECTOR AV CABLING.
12. PROVIDE CAT 6A TO NEAREST TELECOM ROOM. INSTALL OWNER FURNISHED MOUNT AND LCD TV.
13. DOORS SHALL BE CONNECTED TO A TIMED UNLOCK.
14. MAGNETICALLY HELD DOOR, 16/2 ORANGE TO NEAREST ACCESS CONTROL PANEL, HOLD OPEN POWER SUPPLY AND MAGNETIC DOOR HOLDER BY ELECTRICAL AND DIVISION 8. LOCATE POWER SUPPLY IN MDF AS SHOWN ON T5.01.
15. HOMERUN AMX AX-LINK CABLE TO NEAREST NX-12OO CONTROLLER.

GENERAL NOTES:

1. CCTV SECURITY CAMERAS CABLING AND ROUGH IN ONLY. CAMERA, HARDWARE AND SOFTWARE IS BY OTHERS.
2. CLASSROOM SOUND SYSTEMS INCLUDE A CEILING OR WALL MOUNTED INFRA RED SENSOR. PROVIDE 1 PER EQUIPPED ROOM. COORDINATE WITH ARCHITECT REFLECTED CEILING PLANS, AVOID PLACEMENT WHERE INTERFERENCE FROM OTHER CLASSROOM SPACES WILL OCCUR.
3. PROVIDE (1) 20AWG 4 CONDUCTOR CABLE BETWEEN MOTORIZED SHADE CONTROLLERS . PROVIDE (1) 20 AWG 4 CONDUCTOR FROM SHADE GROUP CONTROLLERS TO THE NEAREST ACCESS CONTROL PANEL..
4. ALL EXTERIOR DOORS SHALL RECEIVE A DOOR POSITION INDICATOR (DOOR CONTACT) WITH 22AWG 2 CONDUCTOR ORANGE CABLE TO THE NEAREST SECURITY PANEL OR ZONE EXPANDER.
5. PROVIDE (2) 2" SLEEVE FROM CORRIDORS TO EACH CLASSROOM CEILING SPACE FOR DATA AND INTERCOM CABLING.
6. PROVIDE (2) 1" SLEEVE FROM CORRIDORS TO EACH STAFF OFFICE, WORK AREA AND AS REQUIRED FOR PATHWAY FOR INTERCOM AND DATA LOCATIONS.
7. ORANGE SECURITY CABLE IS OWNER FURNISHED AND CONTRACTOR INSTALLED. CONTRACTOR IS TO PROVIDE PROJECTED AMOUNT OF CABLE NEEDED BY CONDUCTOR SIZE AND COUNT A MINIMUM OF (4) WEEKS BEFORE INSTALLATION IS SCHEDULED TO COMMENCE.
8. PROVIDE APPROPRIATELY SIZED WIREMESH CAGES FOR DEVICES MOUNTED IN THE GYM AND COMMONS.

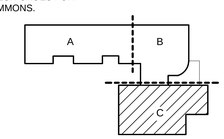

KEY PLAN

PIVOT ARCHITECTURE

Bicsi
DARREN D HEINICK
Reg. No. 1720095
Expires 10-31-17
SIGNATURE

NORTHWEST INFORMATION SERVICES
4900 SW GRIFFITH DRIVE, SUITE 250
BEAVERTON, OREGON 97005
PHONE:(503)626-4265 WWW.NISPDX.COM

BID DOCUMENT SET

Eugene School District
44 W. BROADWAY ST. EUGENE, OREGON

River Road / El Camino del Rio Elementary

FIRST FLOOR PLAN
SECTOR - C

PROJECT #:	1337.00
ISSUE DATE:	10 FEB 2016
DRAWN:	DDH
CHECKED:	GES
REVISIONS:	

T1.13

© 2015 PIVOT ARCHITECTURE

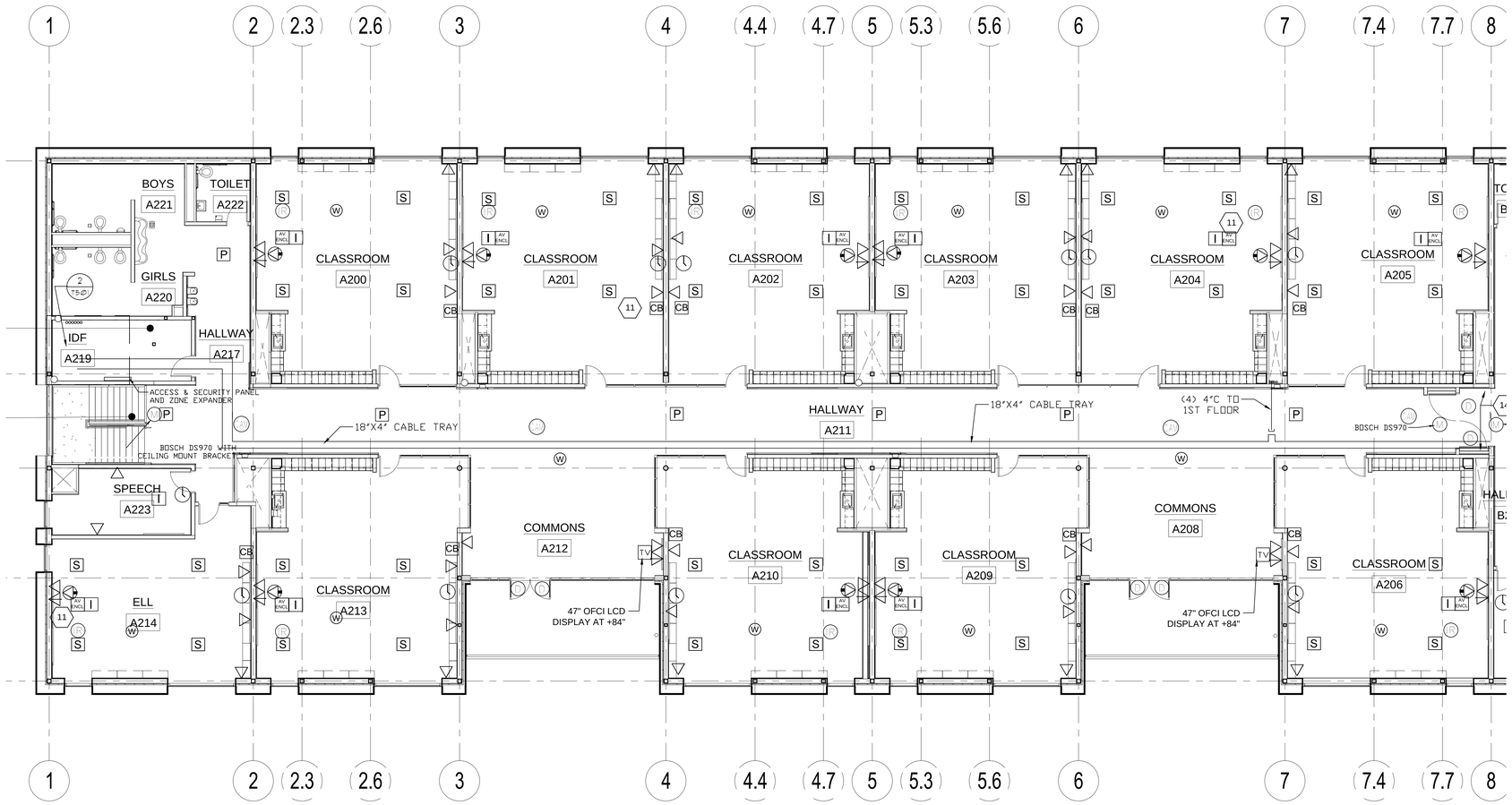

PARTIAL SECOND FLOORPLAN - SECTOR A

1/8" = 1'-0"

PLAN SYMBOL LEGEND

- SINGLE DATA LOCATION FOR CCTV MOUNT AT 15'-0" UNLESS OTHERWISE NOTED. PROVIDE (1) CATEGORY 6A BLUE CABLE.
- DUAL DATA LOCATION. PROVIDE (2) CATEGORY 6A BLUE CABLES.
- TRIPLE DATA LOCATION, (3) CATEGORY 6A BLUE CABLES.
- PRESENTER LOCATION. PROVIDE (1) PRE-TERMINATED MINI-AUDIO, VGA VIDEO CABLE TO SHORT THROW PROJECTOR. PROVIDE (1) PRE-TERMINATED HDMI CABLE TO SHORT THROW PROJECTOR AND LCD FLAT PANEL.
- (W) WIRELESS ACCESS POINT. (2) CATEGORY 6A YELLOW CABLE. COIL 20' SLACK LOOP AT LOCATION INDICATED. TERMINATE IN 2-PORT MODULAR JACK BOX AMP # 1116697-1 OR EQUAL. CEILING MOUNTED UNLESS OTHERWISE NOTED.
- (AP) CAMERA LOCATION AT 16' AFF FOR EXTERIOR, CEILING MOUNT FOR INTERIOR. PROVIDE (1) CATEGORY 6A GREEN CABLE. PROVIDE WP COVER AND COIL 12" SLACK IN EXTERIOR BOXES.
- OWNER FURNISHED SHORT THROW DISPLAY. INSTALL OWNER FURNISHED PROJECTOR AND MOUNT. PROVIDE (1) CATEGORY 6A BLUE CABLE TO THE NEAREST IDF/MDF. SEE TELECOM DETAILS.
- AV ENCL — 24x24 CEILING ENCLOSURE FOR AV/PAGING/CONTROLS. PROVIDE (4) CATEGORY 6A CABLES TO NEAREST TELECOM ROOM.
- TV — OWNER FURNISHED CONTRACTOR INSTALLED 47" LCD TV AND MOUNT, UNLESS OTHERWISE NOTED. PROVIDE (2) CATEGORY 6A CABLES. PROVIDE AMX DIGITAL SIGNAGE PLAYER, ATTACH TO REAR OF OFCI LCD.
- P — WALL MOUNT PAGING SPEAKER PROVIDE 18AWG GRAY SHIELDED TWISTED PAIR CABLE. UP TO 10 SPEAKERS MAY BE CONNECTED IN SERIES.
- P — CEILING MOUNT PAGING SPEAKER PROVIDE 18AWG GRAY SHIELDED TWISTED PAIR CABLE. UP TO 10 SPEAKERS MAY BE CONNECTED IN SERIES. REFER TO ARCHITECT REFLECTED CEILING PLAN FOR EXACT PLACEMENT.
- I — CEILING MOUNT INTERCOM SPEAKER PROVIDE 22/4 GRAY SHIELDED CABLE TO THE AMX ENCLOSURE OR NEAREST IDF/MDF ROOM. REFER TO ARCHITECT REFLECTED CEILING PLAN FOR EXACT PLACEMENT.
- CB — 8-BUTTON AMX KEYPAD CONTROL AND CALL BUTTON. CONNECT TO ADJACENT CATEGORY 5E GRAY CABLE TO NEAREST CLASSROOM 8-BUTTON AMX KEYPAD OR AS NOTED.
- S — CEILING MOUNTED VOICE RE-ENFORCEMENT SPEAKER. REFER TO ARCHITECT REFLECTED CEILING PLAN FOR EXACT PLACEMENT.
- SURFACE MOUNTED 12" ANALOG CLOCK AT 96" AFF. UNLESS OTHERWISE NOTED
- (IR) CEILING MOUNTED IR SENSOR FOR CLASSROOM SOUND SYSTEMS. PROVIDE CATEGORY 6 CABLE TO THE CLASSROOM AMPLIFIER.
- (D) DOOR CONTACT - PROVIDE 1/2" CONDUIT TO DOOR FRAME. INSTALL OWNER FURNISHED ORANGE 22/2 CABLE TO THE SECURITY PANEL OR ZONE EXPANDER.
- (K) ACCESS PINPAD PROVIDE 1/2" CONDUIT TO DOUBLE GANG BOX AT +48" AFF. INSTALL OWNER FURNISHED ORANGE 22AWG 3-PAIR, CONNECT-AIR OR APPROVED TO THE ACCESS PANEL OR ZONE EXPANDER. REFER TO KEYED NOTE FOR PINPAD TYPE. PIN PAD LOCATIONS MUST BE SEPARATED BY A MINIMUM OF 12" O.C. TO PREVENT FALSE CARD READS.
- (M) MOTION SENSOR -PROVIDE 1/2" CONDUIT TO SINGLE GANG BOX AT +108" AFF. INSTALL OWNER FURNISHED ORANGE 22/4 TO THE INTRUSION PANEL OR ZONE EXPANDER.
- (C) CARD READER - PROVIDE 3/4" CONDUIT TO SINGLE GANG BOX AT +48" AFF. COORDINATE DEVICES PLACEMENT WITH DOOR INSTALLER AS SOME DEVICES MAY BE LOCATED ON DOOR MULLIONS. INSTALL OWNER FURNISHED ORANGE 22AWG 4-PAIR SHIELDED TO THE ACCESS PANEL.
- S — SECURITY SYSTEM SIREN, INSTALL OWNER FURNISHED ORANGE 16/2 TO INTRUSION PANEL
- (K) DMP SECURITY KEYPAD PROVIDE 1/2" CONDUIT TO DOUBLE GANG BOX AT +48" AFF. INSTALL OWNER FURNISHED ORANGE 18/4 TO THE SECURITY PANEL.

KEYED NOTES:

1. PROVIDE PROTECTIVE NON-METALLIC COVER
2. ARMING/DISARMING KEYPAD LOCATION, GREY. HID5355AGK09.
3. DOOR CONTROL KEYPAD LOCATION, WHITE. HID5355ABK09.
4. LOCK DOWN INITIATION BUTTON.
5. PROVIDE RACEWAY TO ACCESSIBLE CEILING SPACE IN B115
6. PROVIDE 12X12X4 BACKBOX AND 1/2" C. TO ACCESSIBLE SPACE FOR WALL MOUNTED PAGING SPEAKER AT 108" AFF, UNLESS NOTED.
7. FLOORBOX LOCATION. CONNECT HDMI AND VGA TO PRESENTER LOCATION. PROVIDE (2) CAT 6A CABLES TO MDF.
8. REFER TO ARCHITECT ELEVATIONS FOR DEVICE PLACEMENT ON MEDIA CENTER WALL.
9. MULTI-PURPOSE VIDEO CONNECTION.
10. TORMAX MOTORIZED SLIDING DOOR, PROVIDE DOOR CONTACTS AND CONNECTION.
11. HOMERUN CATEGORY 5E GREY CABLE FROM 8-BUTTON KEYPAD TO NEAREST NX-12OO CONTROLLER.
12. PROVIDE CAT 6A TO NEAREST TELECOM ROOM. INSTALL OWNER FURNISHED MOUNT AND LCD TV.
13. DOORS SHALL BE CONNECTED TO A TIMED UNLOCK.
14. MAGNETICALLY HELD DOOR, 18/2 ORANGE TO NEAREST ACCESS CONTROL PANEL, HOLD OPEN POWER SUPPLY AND MAGNETIC DOOR HOLDER BY ELECTRICAL AND DIVISION 8. LOCATE POWER SUPPLY IN MDF AS SHOWN ON DETAIL 1 OF SHEET T5.01.
15. NOT USED.

GENERAL NOTES:

1. CCTV SECURITY CAMERAS AS SHOWN CABLING AND ROUGH IN ONLY. CAMERA, HARDWARE AND SOFTWARE IS BY OTHERS.
2. CLASSROOM SOUND SYSTEMS INCLUDE A CEILING OR WALL MOUNTED INFRA RED SENSOR. PROVIDED 1 PER EQUIPPED ROOM. COORDINATE WITH ARCHITECT REFLECTED CEILING PLANS, AVOID PLACEMENT WHERE INTERFERENCE FROM OTHER CLASSROOM SPACES WILL OCCUR.
3. PROVIDE (1) 20AWG 4 CONDUCTOR CABLE BETWEEN MOTORIZED SHADE CONTROLLERS . PROVIDE (1) 20 AWG 4 CONDUCTOR FROM SHADE GROUP CONTROLLERS TO THE NEAREST ACCESS CONTROL PANEL.
4. ALL EXTERIOR DOORS SHALL RECEIVE A DOOR POSITION INDICATOR (DOOR CONTACT) WITH 22AWG 2 CONDUCTOR ORANGE CABLE TO THE NEAREST ACCESS PANEL
5. PROVIDE (2) 2" SLEEVE FROM CORRIDORS TO EACH CLASSROOM CEILING SPACE FOR DATA AND INTERCOM CABLING.
6. PROVIDE (1) 2" SLEEVE FROM CORRIDORS TO EACH STAFF OFFICE, WORK AREA AND AS REQUIRED FOR PATHWAY FOR INTERCOM AND DATA LOCATIONS.

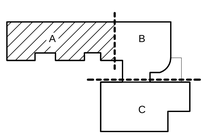

KEY PLAN

PIVOT ARCHITECTURE

Bicsi — Registered Communications Distribution Designer — Darren D Hiivnck — Reg. No. 17200053 — Expires 12-31-17 — Signature

NORTHWEST INFORMATION SERVICES
4300 SW GRIFFITH DRIVE, SUITE 230
BEAVERTON, OREGON 97005
PHONE:503-296-4625 WWW.NISPDX.COM

BID DOCUMENT SET

Eugene School District
44 W. BROADWAY ST. EUGENE, OREGON

River Road / El Camino del Rio Elementary

SECOND FLOOR PLAN
SECTOR - A

PROJECT #:	1337.00
ISSUE DATE:	10 FEB 2016
DRAWN:	DDH
CHECKED:	GES

REVISIONS:

T1.14

© 2015 PIVOT ARCHITECTURE

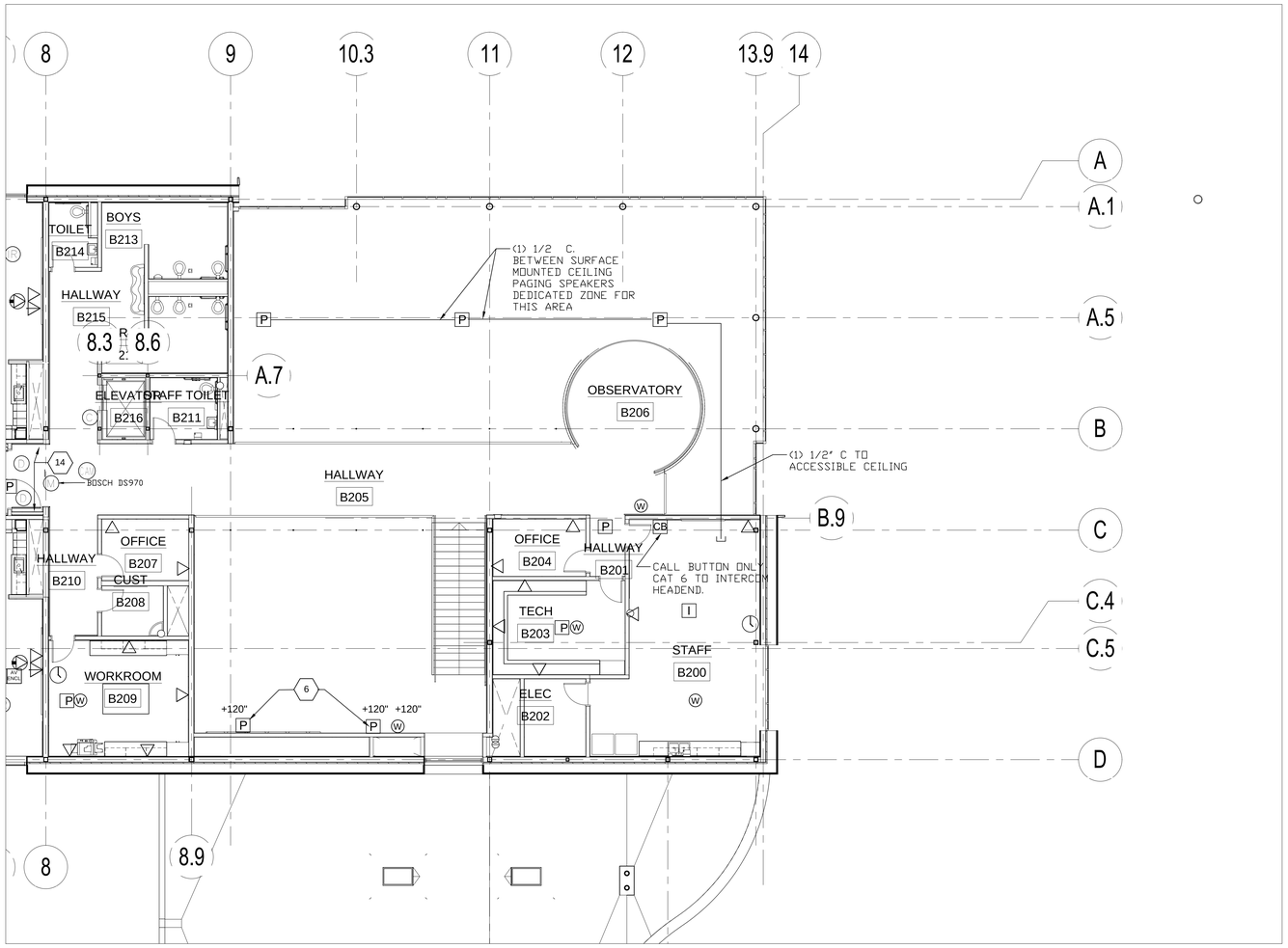

PARTIAL SECOND FLOORPLAN - SECTOR B

1/8" = 1'-0"

PLAN SYMBOL LEGEND

- SINGLE DATA LOCATION FOR CCTV MOUNT AT 15'-0" UNLESS OTHERWISE NOTED. PROVIDE (1) CATEGORY 6A BLUE CABLE.
- DUAL DATA LOCATION. PROVIDE (2) CATEGORY 6A BLUE CABLES.
- TRIPLE DATA LOCATION, (3) CATEGORY 6A BLUE CABLES.
- PRESENTER LOCATION. PROVIDE (1) PRE-TERMINATED MINI-AUDIO, VGA VIDEO CABLE TO SHORT THROW PROJECTOR. PROVIDE (1) PRE-TERMINATED HDMI CABLE TO SHORT THROW PROJECTOR AND LCD FLAT PANEL.
- W — WIRELESS ACCESS POINT. (2) CATEGORY 6A YELLOW CABLE. COIL 20' SLACK LOOP AT LOCATION INDICATED. TERMINATE IN 2-PORT MODULAR JACK BOX AMP # 1116697-1 OR EQUAL. CEILING MOUNTED UNLESS OTHERWISE NOTED.
- CAMERA LOCATION AT 16' AFF FOR EXTERIOR, CEILING MOUNT FOR INTERIOR. PROVIDE (1) CATEGORY 6A GREEN CABLE. PROVIDE WP COVER AND COIL 12" SLACK IN EXTERIOR BOXES.
- OWNER FURNISHED SHORT THROW DISPLAY. INSTALL OWNER FURNISHED PROJECTOR AND MOUNT. PROVIDE (1) CATEGORY 6A BLUE CABLE TO THE NEAREST IDF/MDF. SEE TELECOM DETAILS.
- AV ENCL — 24x24 CEILING ENCLOSURE FOR AV/PAGING/CONTROLS. PROVIDE (4) CATEGORY 6A CABLES TO NEAREST TELECOM ROOM.
- TV — OWNER FURNISHED CONTRACTOR INSTALLED 47" LCD TV AND MOUNT, UNLESS OTHERWISE NOTED. PROVIDE (2) CATEGORY 6A CABLES. PROVIDE AMX DIGITAL SIGNAGE PLAYER, ATTACH TO REAR OF OFCI LCD.
- P — WALL MOUNT PAGING SPEAKER PROVIDE 18AWG GRAY SHIELDED TWISTED PAIR CABLE. UP TO 10 SPEAKERS MAY BE CONNECTED IN SERIES.
- P — CEILING MOUNT PAGING SPEAKER PROVIDE 18AWG GRAY SHIELDED TWISTED PAIR CABLE. UP TO 10 SPEAKERS MAY BE CONNECTED IN SERIES. REFER TO ARCHITECT REFLECTED CEILING PLAN FOR EXACT PLACEMENT.
- I — CEILING MOUNT INTERCOM SPEAKER PROVIDE 22/4 GRAY SHIELDED CABLE TO THE AMX ENCLOSURE OR NEAREST IDF/MDF ROOM. REFER TO ARCHITECT REFLECTED CEILING PLAN FOR EXACT PLACEMENT.
- CB — 8-BUTTON AMX KEYPAD CONTROL AND CALL BUTTON. CONNECT TO ADJACENT CATEGORY 5E GRAY CABLE TO NEAREST CLASSROOM 8-BUTTON AMX KEYPAD OR AS NOTED.
- S — CEILING MOUNTED VOICE RE-ENFORCEMENT SPEAKER. REFER TO ARCHITECT REFLECTED CEILING PLAN FOR EXACT PLACEMENT.
- SURFACE MOUNTED 12" ANALOG CLOCK AT 96" AFF. UNLESS OTHERWISE NOTED
- IR — CEILING MOUNTED IR SENSOR FOR CLASSROOM SOUND SYSTEMS. PROVIDE CATEGORY 6 CABLE TO THE CLASSROOM AMPLIFIER.
- D — DOOR CONTACT - PROVIDE 1/2" CONDUIT TO DOOR FRAME. INSTALL OWNER FURNISHED ORANGE 22/2 CABLE TO THE SECURITY PANEL OR ZONE EXPANDER.
- K — ACCESS PINPAD PROVIDE 1/2" CONDUIT TO DOUBLE GANG BOX AT +48" AFF. INSTALL OWNER FURNISHED ORANGE 22AWG 3-PAIR, CONNECT-AIR OR APPROVED TO THE ACCESS PANEL OR ZONE EXPANDER. REFER TO KEYED NOTE FOR PINPAD TYPE. PIN PAD LOCATIONS MUST BE SEPARATED BY A MINIMUM OF 12" O.C. TO PREVENT FALSE CARD READS.
- M — MOTION SENSOR -PROVIDE 1/2" CONDUIT TO SINGLE GANG BOX AT +108" AFF. INSTALL OWNER FURNISHED ORANGE 22/4 TO THE INTRUSION PANEL OR ZONE EXPANDER.
- C — CARD READER - PROVIDE 3/4" CONDUIT TO SINGLE GANG BOX AT +48" AFF. COORDINATE DEVICES PLACEMENT WITH DOOR INSTALLER AS SOME DEVICES MAY BE LOCATED ON DOOR MULLIONS. INSTALL OWNER FURNISHED ORANGE 22AWG 4-PAIR SHIELDED TO THE ACCESS PANEL.
- S — SECURITY SYSTEM SIREN. INSTALL OWNER FURNISHED ORANGE 16/2 TO INTRUSION PANEL
- DMP SECURITY KEYPAD PROVIDE 1/2" CONDUIT TO DOUBLE GANG BOX AT +48" AFF. INSTALL OWNER FURNISHED ORANGE 18/4 TO THE SECURITY PANEL.
- K

KEYED NOTES:

1. PROVIDE PROTECTIVE NON-METALLIC COVER
2. ARMING/DISARMING KEYPAD LOCATION, GREY. HID5355AGK09.
3. DOOR CONTROL KEYPAD LOCATION, WHITE. HID5355ABK09.
4. LOCK DOWN INITIATION BUTTON.
5. PROVIDE RACEWAY TO ACCESSIBLE CEILING SPACE IN B115
6. PROVIDE 12X12X4 BACKBOX AND 1/2" C. TO ACCESSIBLE SPACE FOR WALL MOUNTED PAGING SPEAKER AT 108" AFF, UNLESS NOTED.
7. FLOORBOX LOCATION. CONNECT HDMI AND VGA TO PRESENTER LOCATION. PROVIDE (2) CAT 6A CABLES TO MDF.
8. REFER TO ARCHITECT ELEVATIONS FOR DEVICE PLACEMENT ON MEDIA CENTER WALL.
9. MULTI-PURPOSE VIDEO CONNECTION.
10. TORMAX MOTORIZED SLIDING DOOR, PROVIDE DOOR CONTACTS AND CONNECTION.
11. HOMERUN CATEGORY 5E GREY CABLE FROM 8-BUTTON KEYPAD TO NEAREST NX-12OO CONTROLLER.
12. PROVIDE CAT 6A TO NEAREST TELECOM ROOM. INSTALL OWNER FURNISHED MOUNT AND LCD TV.
13. DOORS SHALL BE CONNECTED TO A TIMED UNLOCK.
14. MAGNETICALLY HELD DOOR, 18/2 ORANGE TO NEAREST ACCESS CONTROL PANEL, HOLD OPEN POWER SUPPLY AND MAGNETIC DOOR HOLDER BY ELECTRICAL AND DIVISION 8. LOCATE POWER SUPPLY IN MDF AS SHOWN ON DETAIL 1 OF SHEET T5.01.
15. NOT USED.

GENERAL NOTES:

1. CCTV SECURITY CAMERAS AS SHOWN CABLING AND ROUGH IN ONLY. CAMERA, HARDWARE AND SOFTWARE IS BY OTHERS.
2. CLASSROOM SOUND SYSTEMS INCLUDE A CEILING OR WALL MOUNTED INFRA RED SENSOR. PROVIDED 1 PER EQUIPPED ROOM. COORDINATE WITH ARCHITECT REFLECTED CEILING PLANS, AVOID PLACEMENT WHERE INTERFERENCE FROM OTHER CLASSROOM SPACES WILL OCCUR.
3. PROVIDE (1) 20AWG 4 CONDUCTOR CABLE BETWEEN MOTORIZED SHADE CONTROLLERS . PROVIDE (1) 20 AWG 4 CONDUCTOR FROM SHADE GROUP CONTROLLERS TO THE NEAREST ACCESS CONTROL PANEL.
4. ALL EXTERIOR DOORS SHALL RECEIVE A DOOR POSITION INDICATOR (DOOR CONTACT) WITH 22AWG 2 CONDUCTOR ORANGE CABLE TO THE NEAREST ACCESS PANEL
5. PROVIDE (2) 2" SLEEVE FROM CORRIDORS TO EACH CLASSROOM CEILING SPACE FOR DATA AND INTERCOM CABLING.
6. PROVIDE (1) 2" SLEEVE FROM CORRIDORS TO EACH STAFF OFFICE, WORK AREA AND AS REQUIRED FOR PATHWAY FOR INTERCOM AND DATA LOCATIONS.

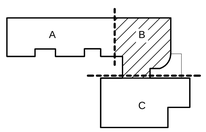

KEY PLAN

PIVOT ARCHITECTURE

Bicsi — Registered Communications Distribution Designer — Darren D Hiivnck — Reg. No. 17200051 — Expires 12-31-17 — Signature

NORTHWEST INFORMATION SERVICES
4300 SW GRIFFITH DRIVE, SUITE 250
BEAVERTON, OREGON 97005
PHONE: 503-296-4625 WWW.NISPDX.COM

BID DOCUMENT SET

Eugene School District
44 W. BROADWAY ST. EUGENE, OREGON

River Road / El Camino del Rio Elementary

SECOND FLOOR PLAN - SECTOR B

PROJECT #:	1327.00
ISSUE DATE:	10 FEB 2016
DRAWN:	RDH
CHECKED:	GES
REVISIONS:	

T1.15

© 2015 PIVOT ARCHITECTURE

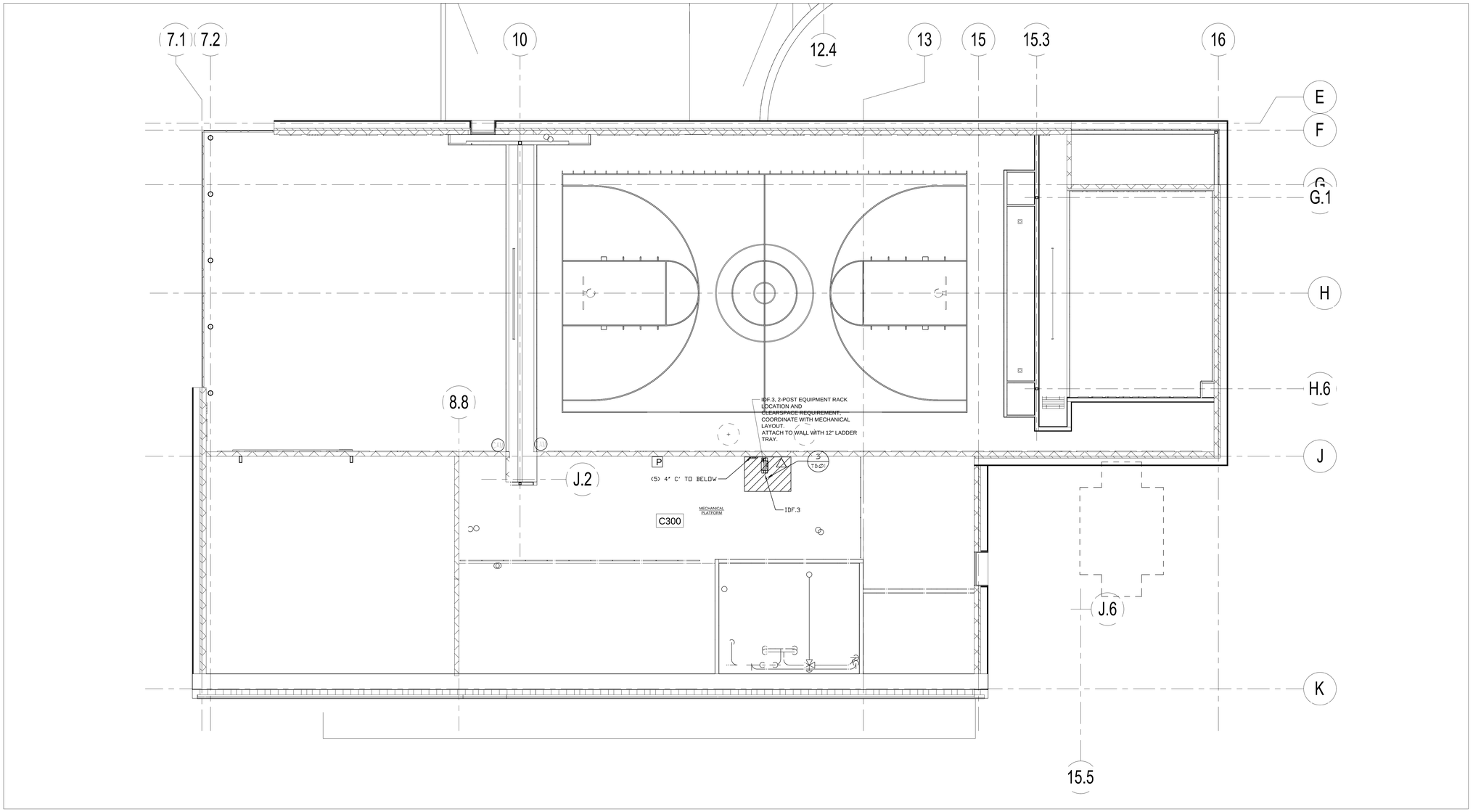

PARTIAL SECOND FLOORPLAN - SECTOR C

1/8" = 1'-0"

PLAN SYMBOL LEGEND

- SINGLE DATA LOCATION FOR CCTV MOUNT AT 15'-0" UNLESS OTHERWISE NOTED. PROVIDE (1) CATEGORY 6A BLUE CABLE.
- DUAL DATA LOCATION. PROVIDE (2) CATEGORY 6A BLUE CABLES.
- TRIPLE DATA LOCATION, (3) CATEGORY 6A BLUE CABLES.
- PRESENTER LOCATION. PROVIDE (1) PRE-TERMINATED MINI-AUDIO, VGA VIDEO CABLE TO SHORT THROW PROJECTOR. PROVIDE (1) PRE-TERMINATED HDMI CABLE TO SHORT THROW PROJECTOR AND LCD FLAT PANEL.
- W — WIRELESS ACCESS POINT. (2) CATEGORY 6A YELLOW CABLE. COIL 20' SLACK LOOP AT LOCATION INDICATED. TERMINATE IN 2-PORT MODULAR JACK BOX AMP # 1116697-1 OR EQUAL. CEILING MOUNTED UNLESS OTHERWISE NOTED.
- CAMERA LOCATION AT 16' AFF FOR EXTERIOR, CEILING MOUNT FOR INTERIOR. PROVIDE (1) CATEGORY 6A GREEN CABLE. PROVIDE WP COVER AND COIL 12" SLACK IN EXTERIOR BOXES.
- OWNER FURNISHED SHORT THROW DISPLAY. INSTALL OWNER FURNISHED PROJECTOR AND MOUNT. PROVIDE (1) CATEGORY 6A BLUE CABLE TO THE NEAREST IDF/MDF. SEE TELECOM DETAILS.
- AV ENCL — 24x24 CEILING ENCLOSURE FOR AV/PAGING/CONTROLS. PROVIDE (4) CATEGORY 6A CABLES TO NEAREST TELECOM ROOM.
- TV — OWNER FURNISHED CONTRACTOR INSTALLED 47" LCD TV AND MOUNT, UNLESS OTHERWISE NOTED. PROVIDE (2) CATEGORY 6A CABLES. PROVIDE AMX DIGITAL SIGNAGE PLAYER, ATTACH TO REAR OF OFCI LCD.
- P — WALL MOUNT PAGING SPEAKER PROVIDE 18AWG GRAY SHIELDED TWISTED PAIR CABLE. UP TO 10 SPEAKERS MAY BE CONNECTED IN SERIES.
- P — CEILING MOUNT PAGING SPEAKER PROVIDE 18AWG GRAY SHIELDED TWISTED PAIR CABLE. UP TO 10 SPEAKERS MAY BE CONNECTED IN SERIES. REFER TO ARCHITECT REFLECTED CEILING PLAN FOR EXACT PLACEMENT.
- I — CEILING MOUNT INTERCOM SPEAKER PROVIDE 22/4 GRAY SHIELDED CABLE TO THE AMX ENCLOSURE OR NEAREST IDF/MDF ROOM. REFER TO ARCHITECT REFLECTED CEILING PLAN FOR EXACT PLACEMENT.
- CB — 8-BUTTON AMX KEYPAD CONTROL AND CALL BUTTON. CONNECT TO ADJACENT CATEGORY 5E GRAY CABLE TO NEAREST CLASSROOM 8-BUTTON AMX KEYPAD OR AS NOTED.
- S — CEILING MOUNTED VOICE RE-ENFORCEMENT SPEAKER. REFER TO ARCHITECT REFLECTED CEILING PLAN FOR EXACT PLACEMENT.
- SURFACE MOUNTED 12" ANALOG CLOCK AT 96" AFF. UNLESS OTHERWISE NOTED
- IR — CEILING MOUNTED IR SENSOR FOR CLASSROOM SOUND SYSTEMS. PROVIDE CATEGORY 6 CABLE TO THE CLASSROOM AMPLIFIER.
- D — DOOR CONTACT - PROVIDE 1/2" CONDUIT TO DOOR FRAME. INSTALL OWNER FURNISHED ORANGE 22/2 CABLE TO THE SECURITY PANEL OR ZONE EXPANDER.
- K — ACCESS PINPAD PROVIDE 1/2" CONDUIT TO DOUBLE GANG BOX AT +48" AFF. INSTALL OWNER FURNISHED ORANGE 22AWG 3-PAIR, CONNECT-AIR OR APPROVED TO THE ACCESS PANEL OR ZONE EXPANDER. REFER TO KEYED NOTE FOR PINPAD TYPE. PIN PAD LOCATIONS MUST BE SEPARATED BY A MINIMUM OF 12" O.C. TO PREVENT FALSE CARD READS.
- M — MOTION SENSOR -PROVIDE 1/2" CONDUIT TO SINGLE GANG BOX AT +108" AFF. INSTALL OWNER FURNISHED ORANGE 22/4 TO THE INTRUSION PANEL OR ZONE EXPANDER.
- C — CARD READER - PROVIDE 3/4" CONDUIT TO SINGLE GANG BOX AT +48" AFF. COORDINATE DEVICES PLACEMENT WITH DOOR INSTALLER AS SOME DEVICES MAY BE LOCATED ON DOOR MULLIONS. INSTALL OWNER FURNISHED ORANGE 22AWG 4-PAIR SHIELDED TO THE ACCESS PANEL.
- S — SECURITY SYSTEM SIREN, INSTALL OWNER FURNISHED ORANGE 16/2 TO INTRUSION PANEL
- K — DMP SECURITY KEYPAD PROVIDE 1/2" CONDUIT TO DOUBLE GANG BOX AT +48" AFF. INSTALL OWNER FURNISHED ORANGE 18/4 TO THE SECURITY PANEL.

KEYED NOTES:

1. PROVIDE PROTECTIVE NON-METALLIC COVER
2. ARMING/DISARMING KEYPAD LOCATION, GREY. HID5355AGK09.
3. DOOR CONTROL KEYPAD LOCATION, WHITE. HID5355ABK09.
4. LOCK DOWN INITIATION BUTTON.
5. PROVIDE RACEWAY TO ACCESSIBLE CEILING SPACE IN B115
6. PROVIDE 12X12X4 BACKBOX AND 1/2" C. TO ACCESSIBLE SPACE FOR WALL MOUNTED PAGING SPEAKER AT 108" AFF, UNLESS NOTED.
7. FLOORBOX LOCATION. CONNECT HDMI AND VGA TO PRESENTER LOCATION. PROVIDE (2) CAT 6A CABLES TO MDF.
8. REFER TO ARCHITECT ELEVATIONS FOR DEVICE PLACEMENT ON MEDIA CENTER WALL.
9. MULTI-PURPOSE VIDEO CONNECTION.
10. TORMAX MOTORIZED SLIDING DOOR, PROVIDE DOOR CONTACTS AND CONNECTION.
11. HOMERUN CATEGORY 5E GREY CABLE FROM 8-BUTTON KEYPAD TO NEAREST NX-12OO CONTROLLER.
12. PROVIDE CAT 6A TO NEAREST TELECOM ROOM. INSTALL OWNER FURNISHED MOUNT AND LCD TV.
13. DOORS SHALL BE CONNECTED TO A TIMED UNLOCK.
14. MAGNETICALLY HELD DOOR, 18/2 ORANGE TO NEAREST ACCESS CONTROL PANEL, HOLD OPEN POWER SUPPLY AND MAGNETIC DOOR HOLDER BY ELECTRICAL AND DIVISION 8. LOCATE POWER SUPPLY IN MDF AS SHOWN ON DETAIL 1 OF SHEET T5.01.
15. NOT USED.

GENERAL NOTES:

1. CCTV SECURITY CAMERAS AS SHOWN CABLING AND ROUGH IN ONLY. CAMERA, HARDWARE AND SOFTWARE IS BY OTHERS.
2. CLASSROOM SOUND SYSTEMS INCLUDE A CEILING OR WALL MOUNTED INFRA RED SENSOR. PROVIDED 1 PER EQUIPPED ROOM. COORDINATE WITH ARCHITECT REFLECTED CEILING PLANS, AVOID PLACEMENT WHERE INTERFERENCE FROM OTHER CLASSROOM SPACES WILL OCCUR.
3. PROVIDE (1) 20AWG 4 CONDUCTOR CABLE BETWEEN MOTORIZED SHADE CONTROLLERS . PROVIDE (1) 20 AWG 4 CONDUCTOR FROM SHADE GROUP CONTROLLERS TO THE NEAREST ACCESS CONTROL PANEL.
4. ALL EXTERIOR DOORS SHALL RECEIVE A DOOR POSITION INDICATOR (DOOR CONTACT) WITH 22AWG 2 CONDUCTOR ORANGE CABLE TO THE NEAREST ACCESS PANEL
5. PROVIDE (2) 2" SLEEVE FROM CORRIDORS TO EACH CLASSROOM CEILING SPACE FOR DATA AND INTERCOM CABLING.
6. PROVIDE (1) 2" SLEEVE FROM CORRIDORS TO EACH STAFF OFFICE, WORK AREA AND AS REQUIRED FOR PATHWAY FOR INTERCOM AND DATA LOCATIONS.

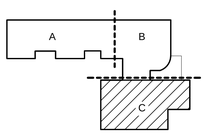

KEY PLAN

PIVOT ARCHITECTURE

REGISTERED COMMUNICATIONS DISTRIBUTION DESIGNER
BICSI
DARREN D HEFRICK
REG. No. 17200051
EXPIRES 12-31-17
SIGNATURE

NORTHWEST INFORMATION SERVICES
4900 SW GRIFFITH DRIVE, SUITE 250
BEAVERTON, OREGON 97005
PHONE 503.296.4125 WWW.NISPDX.COM

BID DOCUMENT SET

Eugene School District
4J
4-W. BROADWAY ST., EUGENE, OREGON

River Road / El Camino del Rio Elementary

SECOND FLOOR PLAN - SECTOR C

PROJECT #:	1337.00
ISSUE DATE:	10 FEB 2016
DRAWN:	DDH
CHECKED:	GES
REVISIONS:	

T1.16

© 2015 PIVOT ARCHITECTURE

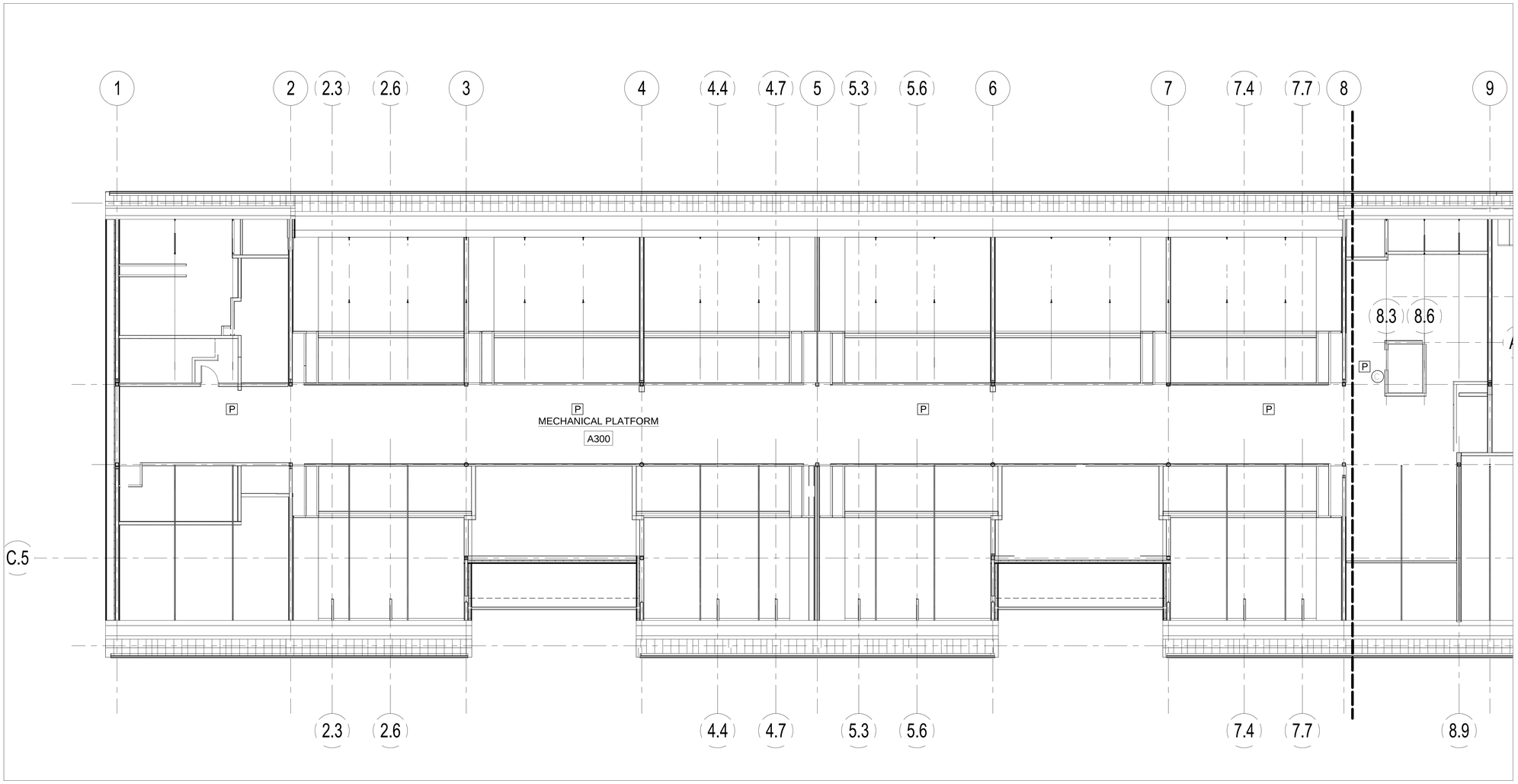

PARTIAL MEZZANINE FLOORPLAN - SECTOR A

1/8" = 1'-0"

PLAN SYMBOL LEGEND

- SINGLE DATA LOCATION FOR CCTV MOUNT AT 15'-0" UNLESS OTHERWISE NOTED. PROVIDE (1) CATEGORY 6A BLUE CABLE.
- DUAL DATA LOCATION. PROVIDE (2) CATEGORY 6A BLUE CABLES.
- TRIPLE DATA LOCATION, (3) CATEGORY 6A BLUE CABLES.
- PRESENTER LOCATION. PROVIDE (1) PRE-TERMINATED MINI-AUDIO, VGA VIDEO CABLE TO SHORT THROW PROJECTOR. PROVIDE (1) PRE-TERMINATED HDMI CABLE TO SHORT THROW PROJECTOR AND LCD FLAT PANEL.
- W — WIRELESS ACCESS POINT. (2) CATEGORY 6A YELLOW CABLE. COIL 20' SLACK LOOP AT LOCATION INDICATED. TERMINATE IN 2-PORT MODULAR JACK BOX AMP # 1116697-1 OR EQUAL. CEILING MOUNTED UNLESS OTHERWISE NOTED.
- CAM — CAMERA LOCATION AT 16' AFF FOR EXTERIOR, CEILING MOUNT FOR INTERIOR. PROVIDE (1) CATEGORY 6A GREEN CABLE. PROVIDE WP COVER AND COIL 12" SLACK IN EXTERIOR BOXES.
- OWNER FURNISHED SHORT THROW DISPLAY. INSTALL OWNER FURNISHED PROJECTOR AND MOUNT. PROVIDE (1) CATEGORY 6A BLUE CABLE TO THE NEAREST IDF/MDF. SEE TELECOM DETAILS.
- AV ENCL — 24x24 CEILING ENCLOSURE FOR AV/PAGING/CONTROLS. PROVIDE (4) CATEGORY 6A CABLES TO NEAREST TELECOM ROOM.
- TV — OWNER FURNISHED CONTRACTOR INSTALLED 47" LCD TV AND MOUNT, UNLESS OTHERWISE NOTED. PROVIDE (2) CATEGORY 6A CABLES. PROVIDE AMX DIGITAL SIGNAGE PLAYER, ATTACH TO REAR OF OFCI LCD.
- P — WALL MOUNT PAGING SPEAKER PROVIDE 18AWG GRAY SHIELDED TWISTED PAIR CABLE. UP TO 10 SPEAKERS MAY BE CONNECTED IN SERIES.
- P — CEILING MOUNT PAGING SPEAKER PROVIDE 18AWG GRAY SHIELDED TWISTED PAIR CABLE. UP TO 10 SPEAKERS MAY BE CONNECTED IN SERIES. REFER TO ARCHITECT REFLECTED CEILING PLAN FOR EXACT PLACEMENT.
- I — CEILING MOUNT INTERCOM SPEAKER PROVIDE 22/4 GRAY SHIELDED CABLE TO THE AMX ENCLOSURE OR NEAREST IDF/MDF ROOM. REFER TO ARCHITECT REFLECTED CEILING PLAN FOR EXACT PLACEMENT.
- CB — 8-BUTTON AMX KEYPAD CONTROL AND CALL BUTTON. CONNECT TO ADJACENT CATEGORY 5E GRAY CABLE TO NEAREST CLASSROOM 8-BUTTON AMX KEYPAD OR AS NOTED.
- S — CEILING MOUNTED VOICE RE-ENFORCEMENT SPEAKER. REFER TO ARCHITECT REFLECTED CEILING PLAN FOR EXACT PLACEMENT.
- SURFACE MOUNTED 12" ANALOG CLOCK AT 96" AFF. UNLESS OTHERWISE NOTED
- IR — CEILING MOUNTED IR SENSOR FOR CLASSROOM SOUND SYSTEMS. PROVIDE CATEGORY 6 CABLE TO THE CLASSROOM AMPLIFIER.
- D — DOOR CONTACT - PROVIDE 1/2" CONDUIT TO DOOR FRAME. INSTALL OWNER FURNISHED ORANGE 22/2 CABLE TO THE SECURITY PANEL OR ZONE EXPANDER.
- X — ACCESS PINPAD PROVIDE 1/2" CONDUIT TO DOUBLE GANG BOX AT +48" AFF. INSTALL OWNER FURNISHED ORANGE 22AWG 3-PAIR, CONNECT-AIR OR APPROVED TO THE ACCESS PANEL OR ZONE EXPANDER. REFER TO KEYED NOTE FOR PINPAD TYPE. PIN PAD LOCATIONS MUST BE SEPARATED BY A MINIMUM OF 12" O.C. TO PREVENT FALSE CARD READS.
- M — MOTION SENSOR -PROVIDE 1/2" CONDUIT TO SINGLE GANG BOX AT +108" AFF. INSTALL OWNER FURNISHED ORANGE 22/4 TO THE INTRUSION PANEL OR ZONE EXPANDER.
- C — CARD READER - PROVIDE 3/4" CONDUIT TO SINGLE GANG BOX AT +48" AFF. COORDINATE DEVICES PLACEMENT WITH DOOR INSTALLER AS SOME DEVICES MAY BE LOCATED ON DOOR MULLIONS. INSTALL OWNER FURNISHED ORANGE 22AWG 4-PAIR SHIELDED TO THE ACCESS PANEL.
- S — SECURITY SYSTEM SIREN, INSTALL OWNER FURNISHED ORANGE 16/2 TO INTRUSION PANEL
- K — DMP SECURITY KEYPAD PROVIDE 1/2" CONDUIT TO DOUBLE GANG BOX AT +48" AFF. INSTALL OWNER FURNISHED ORANGE 18/4 TO THE SECURITY PANEL.

KEYED NOTES:

1. PROVIDE PROTECTIVE NON-METALLIC COVER
2. ARMING/DISARMING KEYPAD LOCATION, GREY. HID5355AGK09.
3. DOOR CONTROL KEYPAD LOCATION, WHITE. HID5355ABK09.
4. LOCK DOWN INITIATION BUTTON.
5. PROVIDE RACEWAY TO ACCESSIBLE CEILING SPACE IN B115
6. PROVIDE 12X12X4 BACKBOX AND 1/2" C. TO ACCESSIBLE SPACE FOR WALL MOUNTED PAGING SPEAKER AT 108" AFF, UNLESS NOTED.
7. FLOORBOX LOCATION. CONNECT HDMI AND VGA TO PRESENTER LOCATION. PROVIDE (2) CAT 6A CABLES TO MDF.
8. REFER TO ARCHITECT ELEVATIONS FOR DEVICE PLACEMENT ON MEDIA CENTER WALL.
9. MULTI-PURPOSE VIDEO CONNECTION.
10. TORMAX MOTORIZED SLIDING DOOR, PROVIDE DOOR CONTACTS AND CONNECTION.
11. HOMERUN CATEGORY 5E GREY CABLE FROM 8-BUTTON KEYPAD TO NEAREST NX-12OO CONTROLLER.
12. PROVIDE CAT 6A TO NEAREST TELECOM ROOM. INSTALL OWNER FURNISHED MOUNT AND LCD TV.
13. DOORS SHALL BE CONNECTED TO A TIMED UNLOCK.
14. MAGNETICALLY HELD DOOR, 18/2 ORANGE TO NEAREST ACCESS CONTROL PANEL, HOLD OPEN POWER SUPPLY AND MAGNETIC DOOR HOLDER BY ELECTRICAL AND DIVISION 8. LOCATE POWER SUPPLY IN MDF AS SHOWN ON DETAIL 1 OF SHEET T5.01.
15. NOT USED.

GENERAL NOTES:

1. CCTV SECURITY CAMERAS AS SHOWN CABLING AND ROUGH IN ONLY. CAMERA, HARDWARE AND SOFTWARE IS BY OTHERS.
2. CLASSROOM SOUND SYSTEMS INCLUDE A CEILING OR WALL MOUNTED INFRA RED SENSOR. PROVIDED 1 PER EQUIPPED ROOM. COORDINATE WITH ARCHITECT REFLECTED CEILING PLANS, AVOID PLACEMENT WHERE INTERFERENCE FROM OTHER CLASSROOM SPACES WILL OCCUR.
3. PROVIDE (1) 20AWG 4 CONDUCTOR CABLE BETWEEN MOTORIZED SHADE CONTROLLERS . PROVIDE (1) 20 AWG 4 CONDUCTOR FROM SHADE GROUP CONTROLLERS TO THE NEAREST ACCESS CONTROL PANEL.
4. ALL EXTERIOR DOORS SHALL RECEIVE A DOOR POSITION INDICATOR (DOOR CONTACT) WITH 22AWG 2 CONDUCTOR ORANGE CABLE TO THE NEAREST ACCESS PANEL
5. PROVIDE (2) 2" SLEEVE FROM CORRIDORS TO EACH CLASSROOM CEILING SPACE FOR DATA AND INTERCOM CABLING.
6. PROVIDE (1) 2" SLEEVE FROM CORRIDORS TO EACH STAFF OFFICE, WORK AREA AND AS REQUIRED FOR PATHWAY FOR INTERCOM AND DATA LOCATIONS.

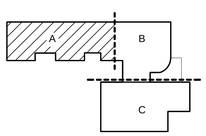

KEY PLAN

PIVOT ARCHITECTURE

Bicsi — Registered Communications Distribution Designer — Darren D Hiemick — Reg. No. 17200053 — Expires 12-31-17

NORTHWEST INFORMATION SERVICES
4900 SW GRIFFITH DRIVE, SUITE 250
BEAVERTON, OREGON 97005
PHONE 503.626.4125 WWW.NISPDX.COM

BID DOCUMENT SET

Eugene School District
4J W. BROADWAY ST. EUGENE, OREGON

River Road / El Camino del Rio Elementary

MEZZANINE FLOOR PLAN - SECTOR A

PROJECT #:	1337.00
ISSUE DATE:	10 FEB 2016
DRAWN:	DDH
CHECKED:	GES
REVISIONS:	

T1.17

© 2015 PIVOT ARCHITECTURE

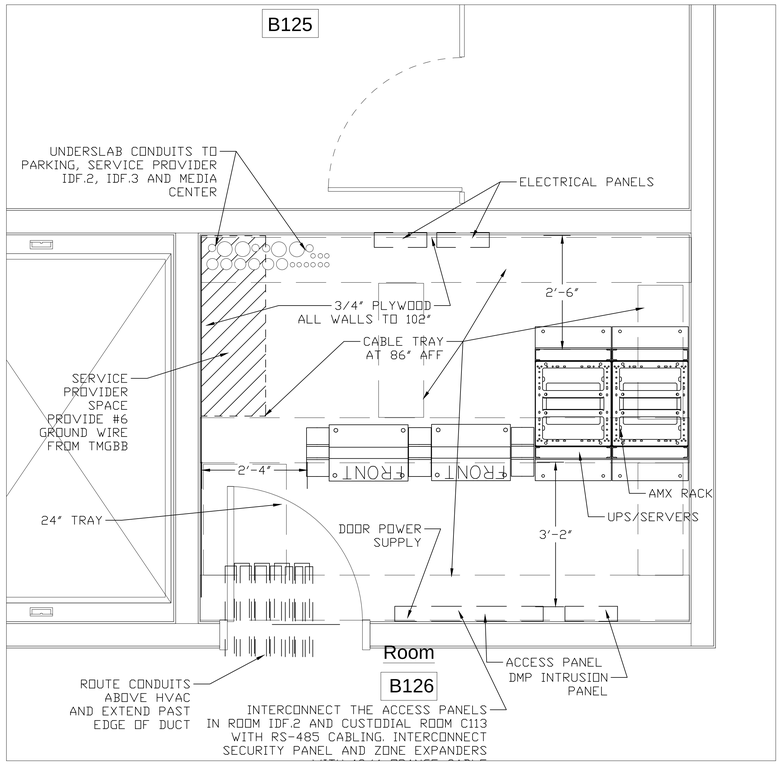

1 T5.01 PARTIAL FIRST FLOOR PLAN MDF.1
3/4" = 1'-0"

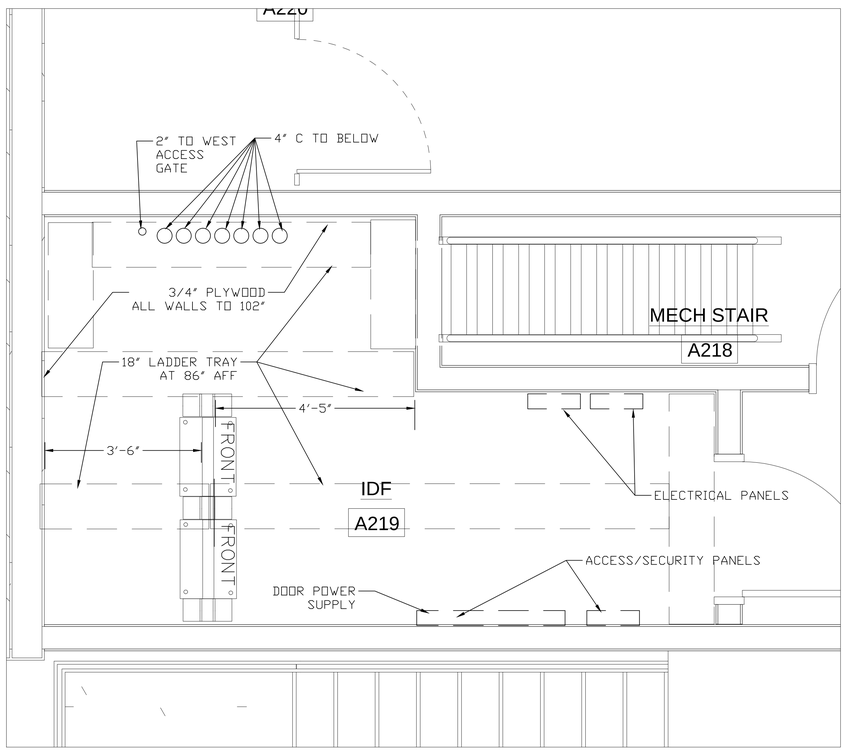

2 T5.01 PARTIAL SECOND FLOOR PLAN IDF.2
3/4" = 1'-0"

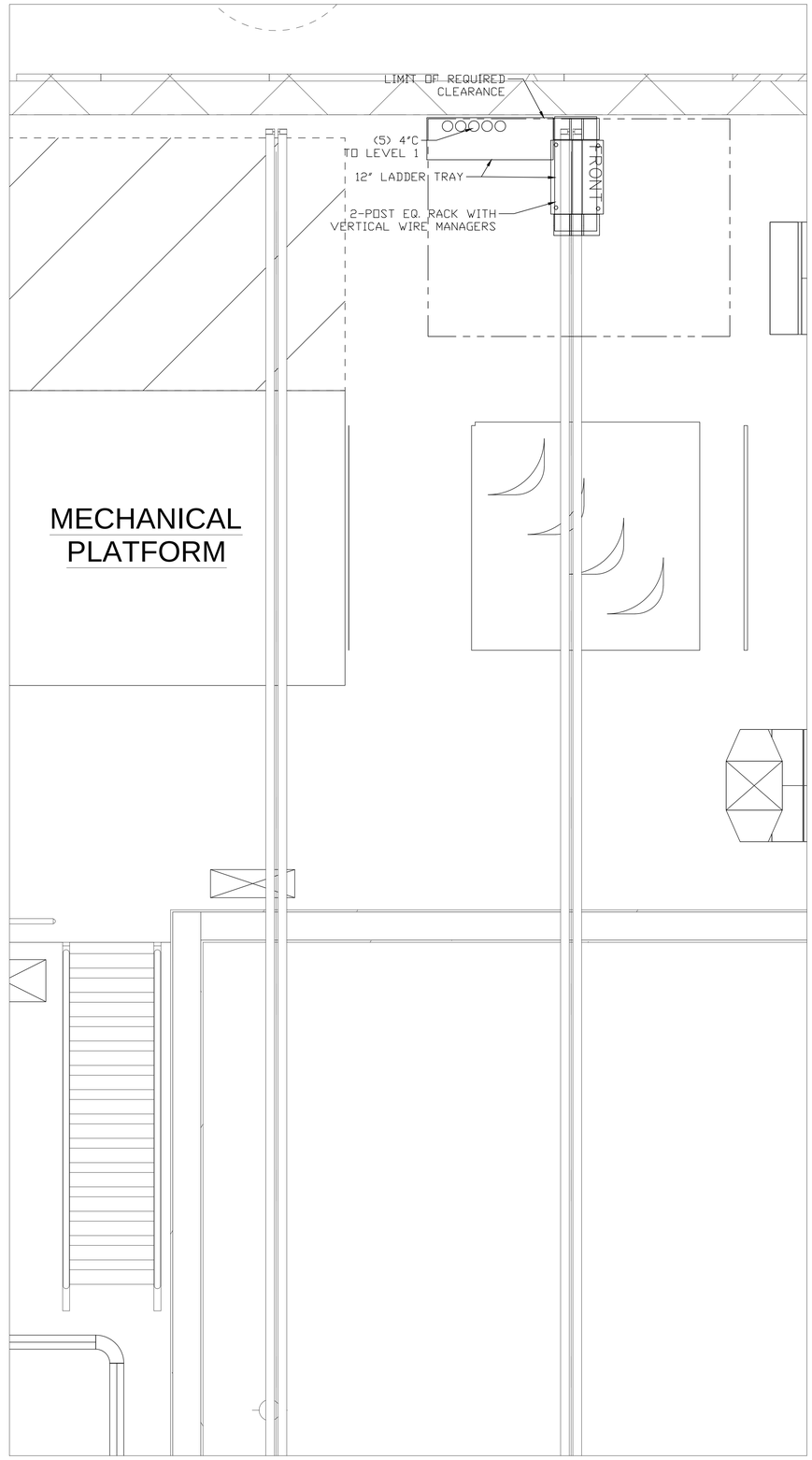

3 T5.01 PARTIAL SECOND FLOOR PLAN IDF.3
3/4" = 1'-0"

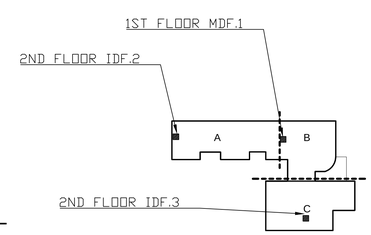

KEY PLAN

PIVOT ARCHITECTURE

REGISTERED COMMUNICATIONS DISTRIBUTION DESIGNER
BICSI
DAMIEN D HERRICK
REG. No. 17200051
EXPIRES 12-31-15
SIGNATURE

NORTHWEST INFORMATION SERVICES
4900 SW GRIFFITH DRIVE, SUITE 250
BEAVERTON, OREGON 97005
PHONE 503.292.4455 WWW.NISPDX.COM

BID DOCUMENT SET

Eugene School District
4J
44 W. BROADWAY ST. EUGENE, OREGON
River Road / El Camino del Rio Elementary

PARTIAL FLOOR PLANS TELECOM ROOMS

PROJECT #:	1327.00
ISSUE DATE:	10 FEB 2016
DRAWN:	DDH
CHECKED:	GES

REVISIONS:

T5.01

© 2015 PIVOT ARCHITECTURE

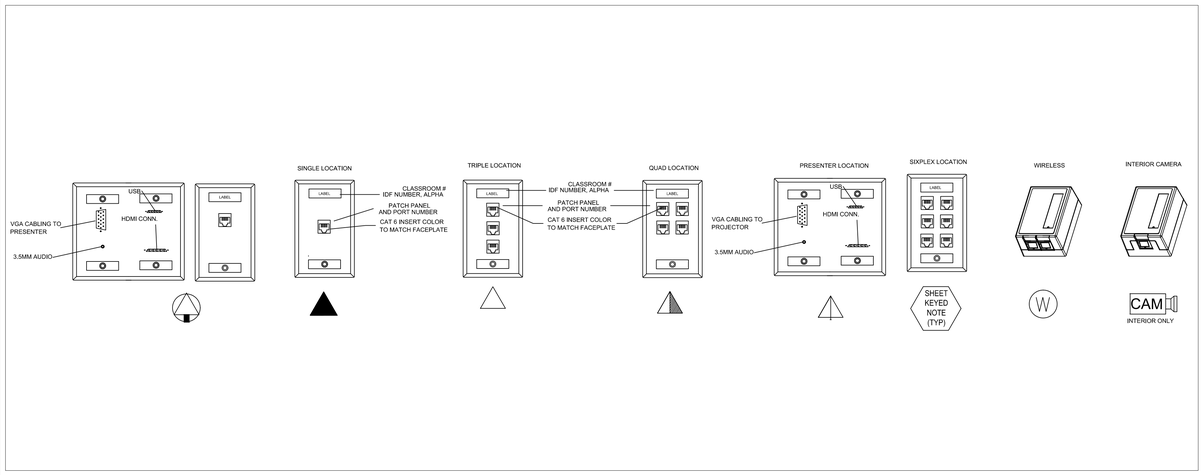

1 T7.01 TELECOM FACEPLATE DETAIL
NTS

OWNER FURNISHED AND INSTALLED

2 T7.01 AV DETAILS
NTS

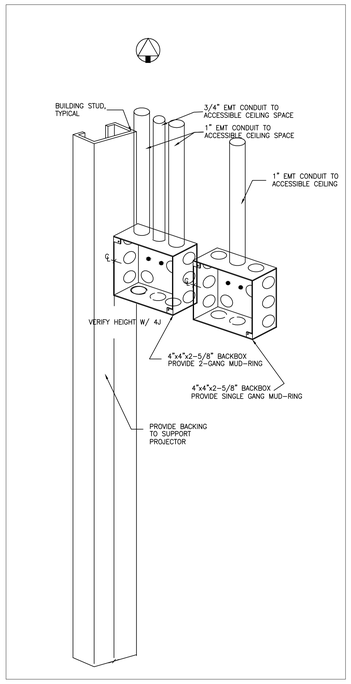

3 T7.01 AV RACEWAY
NTS

OWNER FURNISHED AND INSTALLED

4 T7.01 SHORT THROW PROJECTOR MOUNT
NTS

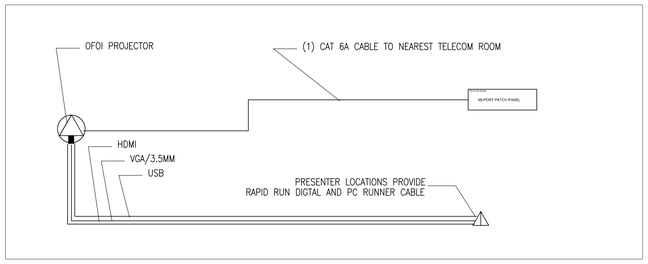

5 T7.01 PROJECTOR CONNECTION DETAILS
NTS

GENERAL NOTE

1. PERFORM FIELD MOCKUP OF A SINGLE SHORT THROW PROJECTOR LOCATION TO VERIFY DIMENSIONS. THE DIMENSIONS LISTED ARE APPLICABLE TO THE EPSON 485W SHORT THROW PROJECTOR.

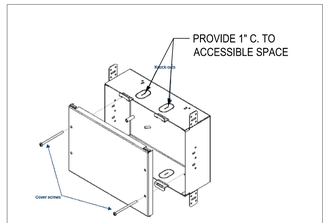

AMX CONTROL PANEL BACKBOX

3 T7.01 AV RACEWAY
NTS

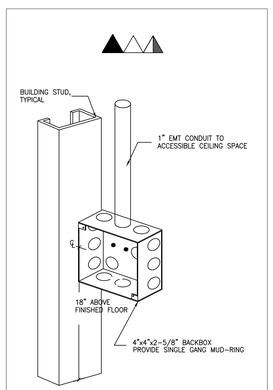

TELECOM RACEWAY

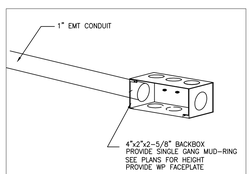

EXTERIOR CAMERA RACEWAY

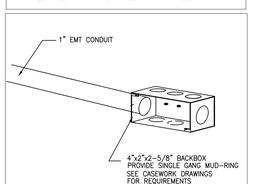

COUNTER TOP RACEWAY

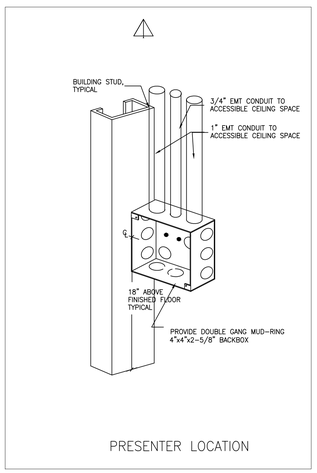

PRESENTER LOCATION

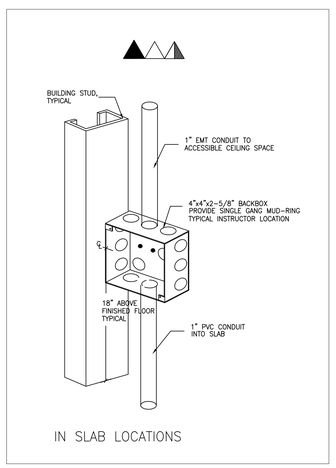

IN SLAB LOCATIONS

7 T7.01 TELECOMMUNICATIONS RACEWAY AND BACKBOXES
NTS

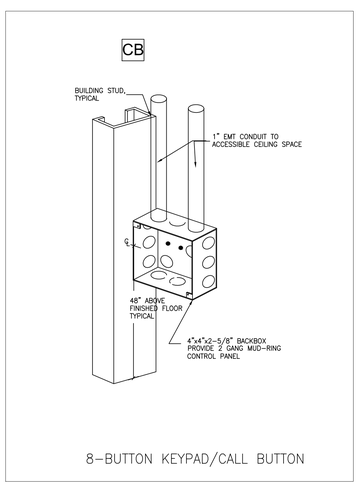

8-BUTTON KEYPAD/CALL BUTTON

6 T7.01 AMX KEYPAD/CALL BUTTON
NTS

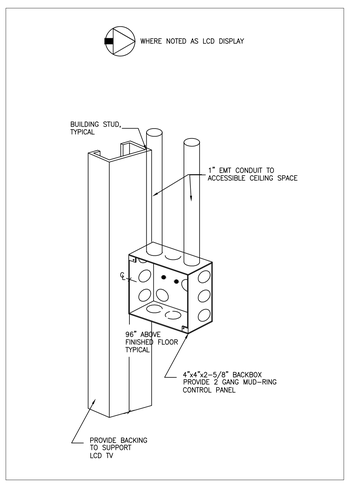

8 T7.01 UC DISPLAY RACEWAY
NTS

PIVOT ARCHITECTURE

BICSI DARREN D HERVICK Reg. No. 1720055 EXPIRES 12-31-17 SIGNATURE

NORTHWEST INFORMATION SERVICES
4900 SW GRIFFITH DRIVE, SUITE 250
BEAVERTON, OREGON 97005
PHONE 503.297.5300 WWW.NISPDX.COM

BID DOCUMENT SET
Eugene School District
4 W. BROADWAY ST. EUGENE, OREGON
River Road / El Camino del Rio Elementary

RACEWAY AND FACEPLATE DETAILS

PROJECT #:	1337.00
ISSUE DATE:	10 FEB 2016
DRAWN:	DDH
CHECKED:	GES
REVISIONS:	

T7.01

© 2015 PIVOT ARCHITECTURE

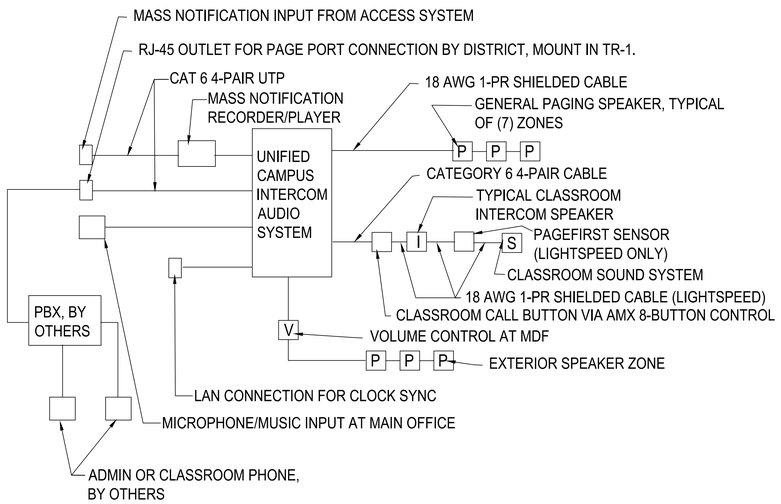

1 T7.02 PAGING/MASS NOTIFICATION LINE DIAGRAM
NTS

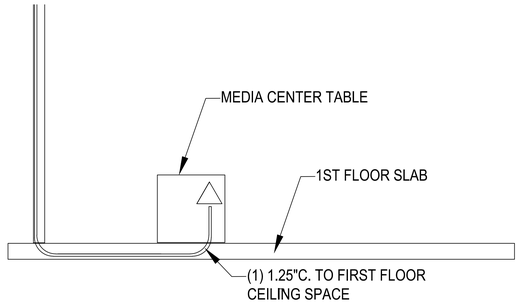

4 T7.02 ISLAND LOCATION RACEWAY 1ST FLOOR
NTS

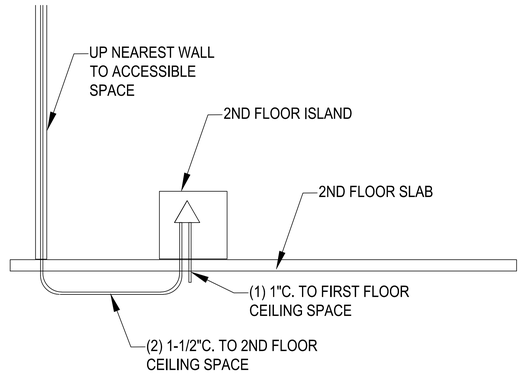

7 T7.02 ISLAND LOCATION RACEWAY 2ND FLOOR
NTS

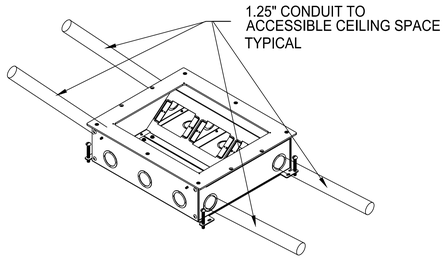

5 T7.02 TYPICAL POWER/DATA/AV FLOORBOX
NTS

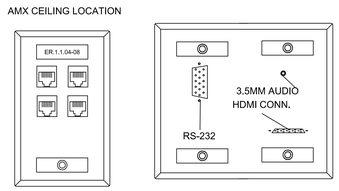

8 T7.02 TYPICAL AMX ENCLOSURE FACEPLATES
NTS

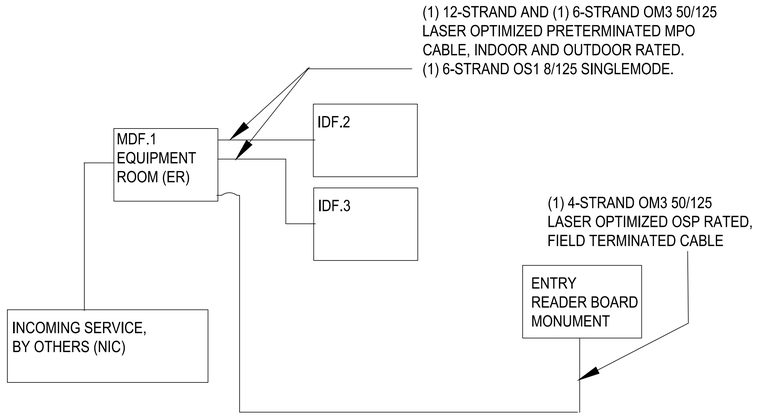

2 T7.02 FIBER RISER DIAGRAM
NTS

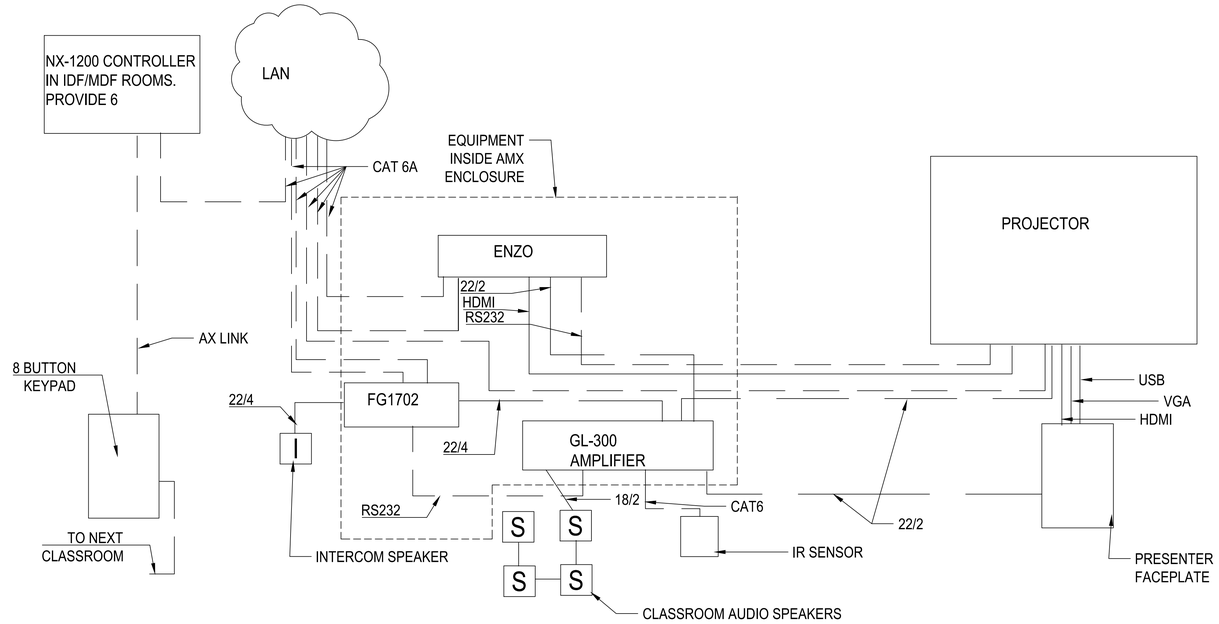

6 T7.02 CLASSROOM AV SINGLE LINE DIAGRAM
TYPICAL OF ALL CLASSROOMS

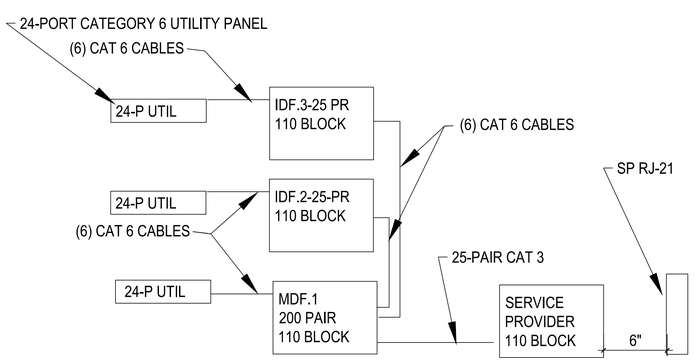

3 T7.02 COPPER RISER DIAGRAM
NTS

PIVOT ARCHITECTURE

Bicsi
DARREN D HERRICK
Reg. No. 1720065
EXPIRES 12-31-17
SIGNATURE

NORTHWEST INFORMATION SERVICES
4900 SW GRIFFITH DRIVE, SUITE 250
BEAVERTON, OREGON 97005
PHONE 503-626-1600 WWW.NISPDX.COM

BID DOCUMENT SET
Eugene School District
4J W. BROADWAY ST. EUGENE, OREGON
River Road / El Camino del Rio Elementary

TELECOM DETAILS

PROJECT #:	1337.00
ISSUE DATE:	10 FEB 2016
DRAWN:	DDH
CHECKED:	GES
REVISIONS:	

T7.02

© 2015 PIVOT ARCHITECTURE

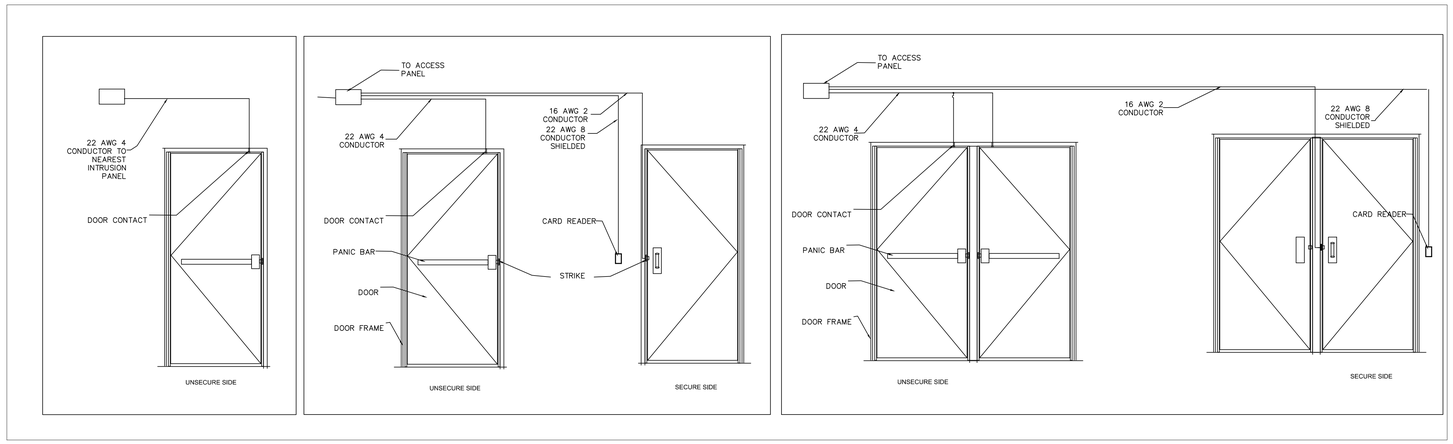

1 T7.03 DOOR SECURITY CABLE REQUIREMENTS - COORDINATE WITH DIVISION 8
NTS

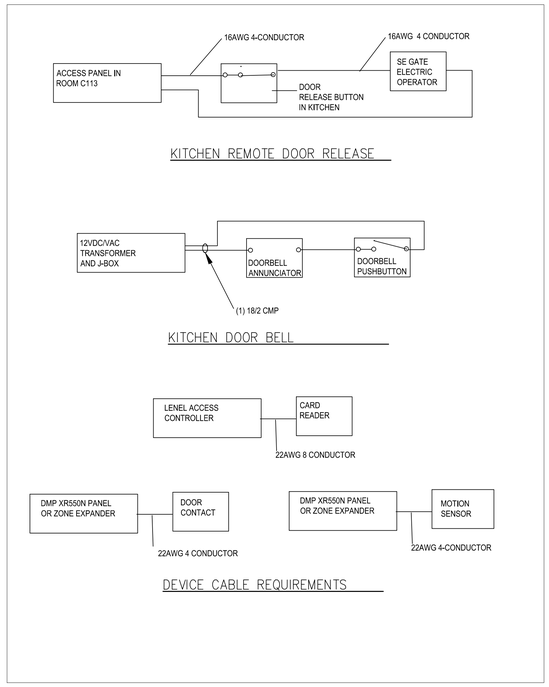

3 T7.03 MISCELLANEOUS DEVICE CABLING
NTS

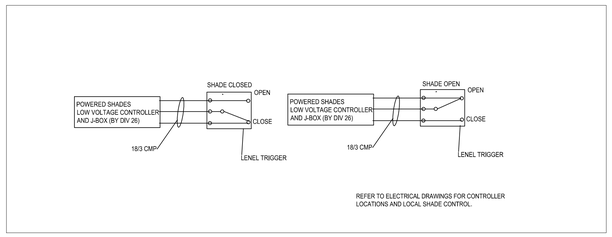

4 T7.03 CLASSROOM GLOBAL SHADE CONTROL VIA LENEL CONTACTS
NTS

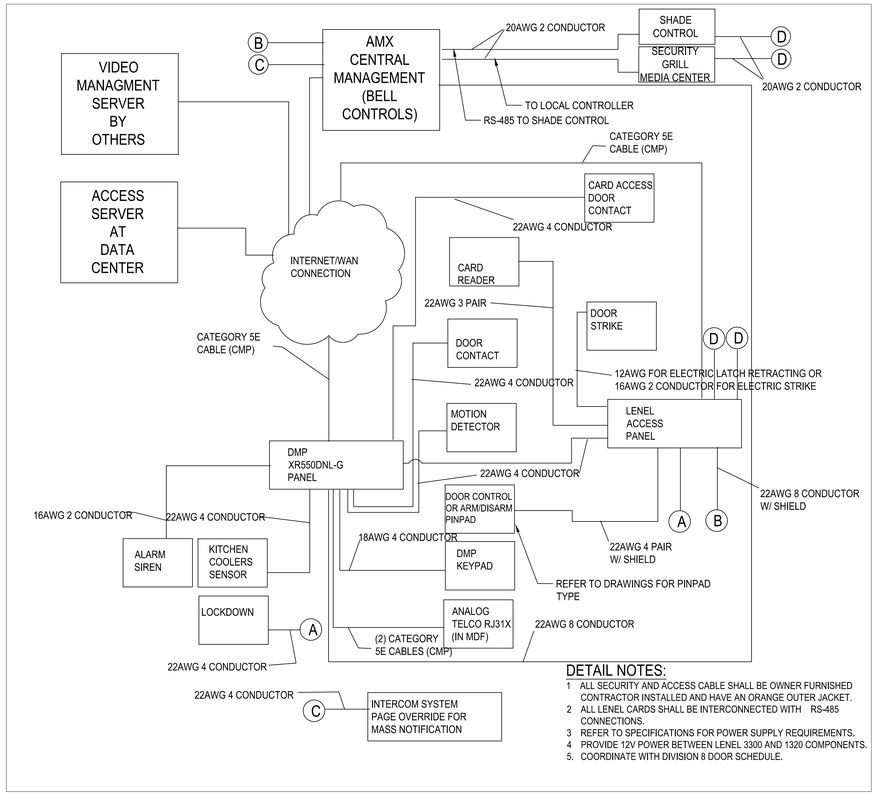

DETAIL NOTES:

1 ALL SECURITY AND ACCESS CABLE SHALL BE OWNER FURNISHED CONTRACTOR INSTALLED AND HAVE AN ORANGE OUTER JACKET.
2 ALL LENEL CARDS SHALL BE INTERCONNECTED WITH RS-485 CONNECTIONS.
3 REFER TO SPECIFICATIONS FOR POWER SUPPLY REQUIREMENTS.
4 PROVIDE 12V POWER BETWEEN LENEL 3300 AND 1320 COMPONENTS.
5. COORDINATE WITH DIVISION 8 DOOR SCHEDULE.

2 T7.03 SECURITY AND ACCESS SYSTEM ONELINE DIAGRAM
NTS

PIVOT ARCHITECTURE

Bicsi
DARREN D HERRICK
Reg. No. 172005(5)
EXPIRES 12-31-17
SIGNATURE

NORTHWEST INFORMATION SERVICES
4500 SW GRIFFITH DRIVE, SUITE 250
BEAVERTON, OREGON 97005
PHONE/FAX/MAILS - WWW.NWSFIX.COM

BID DOCUMENT SET
Eugene School District
4J
4J W. BROADWAY ST - EUGENE, OREGON
River Road / El Camino del Rio Elementary

TELECOM DETAILS

PROJECT #:	1337.00
ISSUE DATE:	10 FEB 2016
DRAWN:	DDH
CHECKED:	GES
REVISIONS:	

T7.03

- 2015 PIVOT ARCHITECTURE

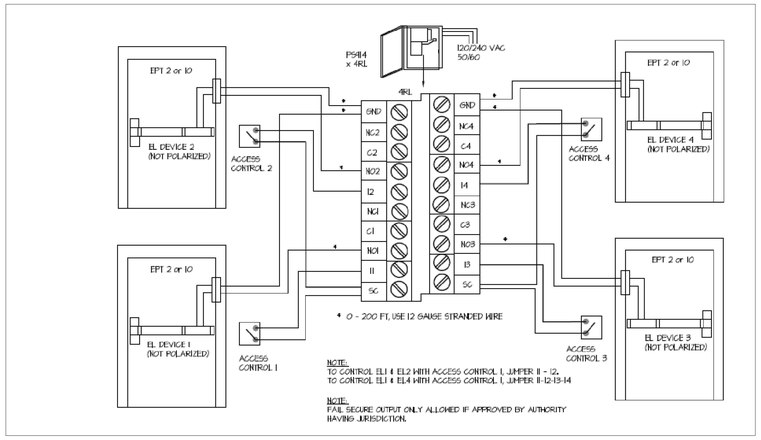

1 T7.04 DOOR SECURITY CABLE REQUIREMENTS - ELECTRONIC PANIC
NTS

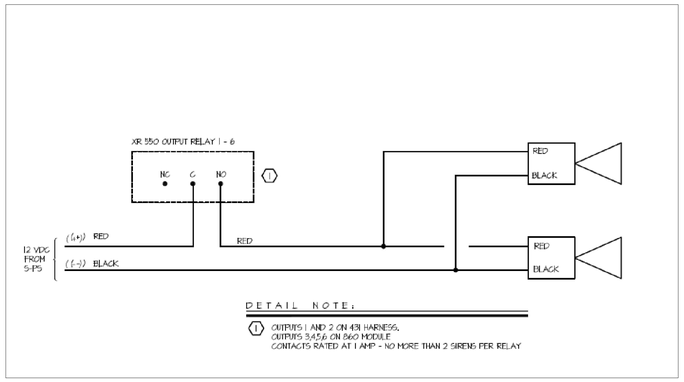

2 T7.04 SIREN CABLING
NTS

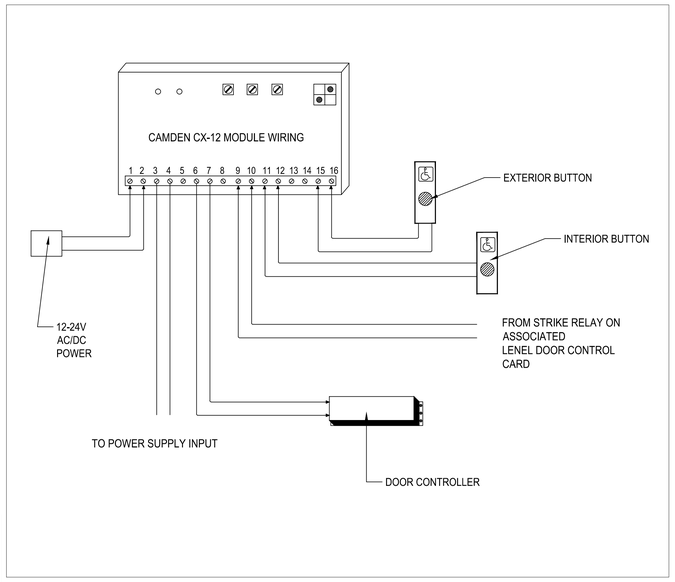

3 T7.04 ADA DOOR INTERFACE MODULE WIRING, (TYP)
NTS

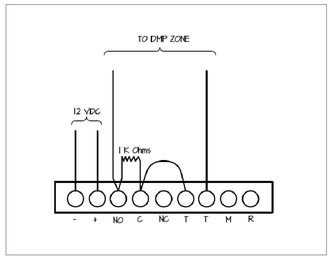

4 T7.04 MOTION SENSOR CABLING
NTS

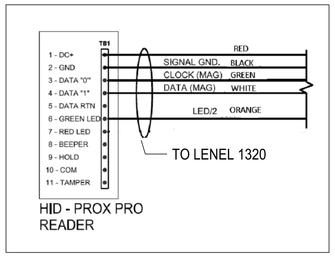

5 T7.04 CARD READER CABLING
NTS

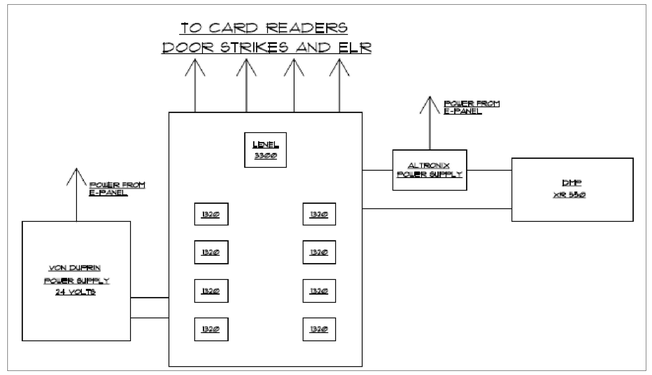

6 T7.04 TYPICAL ACCESS PANEL LAYOUT
NTS

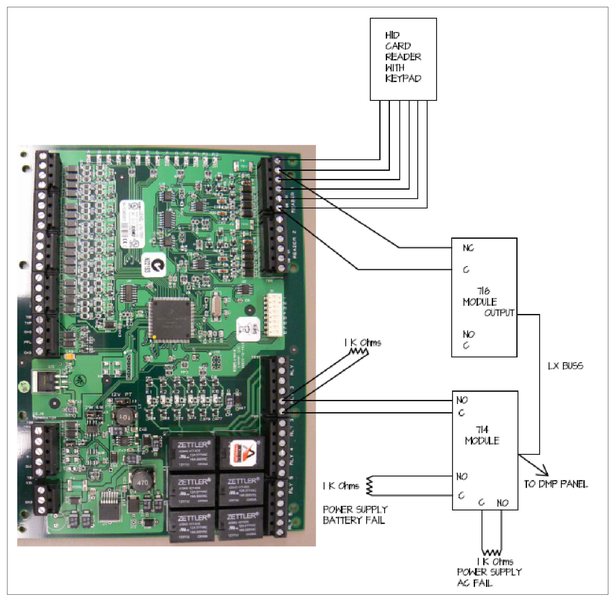

7 T7.04 LENEL 1320 - CARD READER WITH ARM/DISARM KEYPAD
NTS

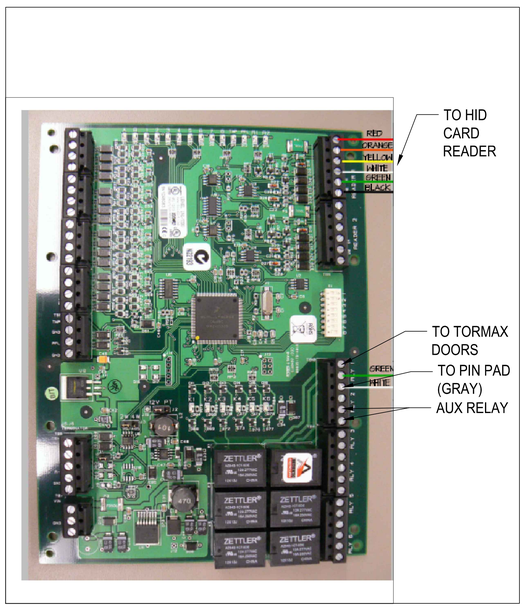

8 T7.04 LENEL 1320 - SLIDING DOOR INTERFACE
NTS

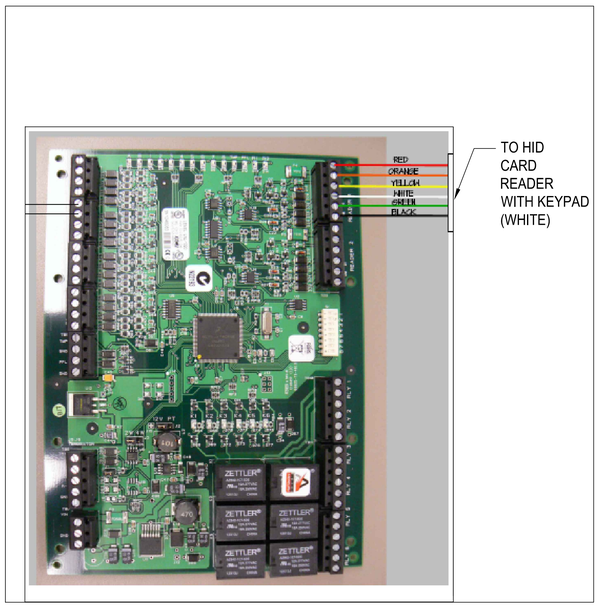

9 T7.04 LENEL 1320 - CARD READER/KEYPAD FOR DOOR CONTROL
NTS

PIVOT ARCHITECTURE

Bicsi
DARREN D HOFFICK
Reg. No. 1720005
Expires 12-31-15
SIGNATURE

NORTHWEST INFORMATION SERVICES
4900 SW GRIFFITH DRIVE, SUITE 230
BEAVERTON, OREGON 97005
PHONE:(503) 641-4283 WWW.NISPDX.COM

BID DOCUMENT SET
Eugene School District
44 W. BROADWAY ST. EUGENE, OREGON
River Road / El Camino del Rio Elementary

TELECOM
DETAILS

PROJECT #:	1337.00
ISSUE DATE:	10 FEB 2016
DRAWN:	DDH
CHECKED:	GES
REVISIONS:	

T7.04

© 2015 PIVOT ARCHITECTURE

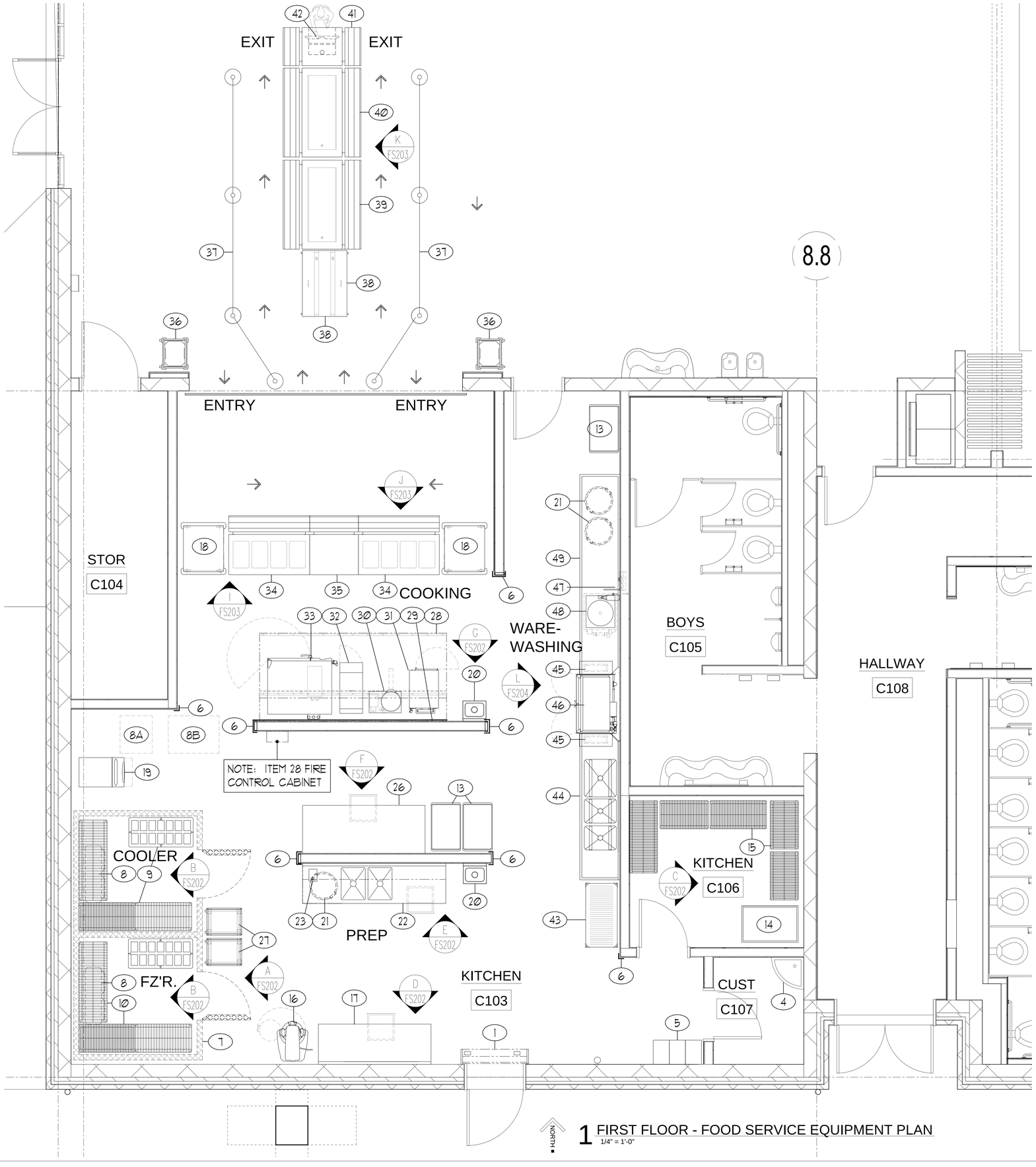

1 FIRST FLOOR - FOOD SERVICE EQUIPMENT PLAN
1/4" = 1'-0"

EQUIPMENT SCHEDULE

ITEM	DESCRIPTION	QUAN.	REMARKS:
1	AIR CURTAIN	1	---
2	NOT USED	---	---
3	NOT USED	---	---
4	JANITOR SINK	1	BY PLUMBING DIVISION
5	STAFF LOCKERS (HALF SIZE)	LOT	BY ARCHITECTURAL DIVISION
6	CORNER/CHANNEL GUARDS	LOT	---
7	WALK-IN COLD STORAGE ROOMS	2	EXISTING EQUIPMENT/RELOCATE
8	REFRIGERATION SYSTEMS	2	EXISTING EQUIPMENT/RELOCATE
9	WALK-IN COOLER SHELVING	LOT	---
10	WALK-IN FREEZER SHELVING	LOT	---
11	NOT USED	---	---
12	NOT USED	---	---
13	UTILITY CARTS	4	ONE LOCATED AT COMMONS EXIT
14	CAN RACK	1	---
15	DRY STORAGE SHELVING	LOT	---
16	30-QUART MIXER	1	---
17	SUPPORT WORK TABLE	1	---
18	MOBILE HEATED/PROOFING CABINETS	2	---
19	CUBE ICE MACHINE	1	---
20	HAND WASHING SINKS	2	---
21	MOBILE WASTE RECEPTACLES	5	TWO LOCATED AT COMMONS EXIT
22	VEGETABLE PREP SINK TABLE	1	---
23	CAN OPENER	1	---
24	NOT USED	---	---
25	NOT USED	---	---
26	WORK TABLE	1	---
27	SHEET PAN RACKS	2	---
28	CANOPY HOOD WITH FIRE PROTECTION SYSTEM	1	---
29	STAINLESS STEEL WALL FLASHING	LOT	---
30	20-GALLON TILTING KETTLE	1	---
31	CONVECTION STEAMER	1	---
32	OPEN BURNER COOK TOP	1	---
33	DOUBLE STACK COMBI-OVEN STEAMERS	1	---
34	HOT FOOD SERVING STATIONS	2	---
35	FLAT TOP SERVING STATION	1	---
36	MOBILE TRAY CARTS	2	---
37	PORTABLE TRAFFIC CONTROL RAILINGS	LOT	---
38	MOBILE DOUBLE-SIDED MILK COOLER	1	---
39	MOBILE DOUBLE-SIDED REFRIGERATED SALAD BAR	1	---
40	MOBILE DOUBLE-SIDED FRUIT/VEGIE BAR	1	---
41	MOBILE DOUBLE-SIDED CASHIER COUNTER	1	---
42	POINT OF SALE SYSTEM	1	BY OWNER
43	MOBILE POT & PAN SHELVING	1	---
44	CLEAN DISHTABLE WITH POTWASHING SINKS	1	---
45	WAREWASHER VAPOR EXHAUST DUCTS	2	---
46	WAREWASHER WITH BOOSTER HEATER	1	---
47	HOSE REEL WITH RECESSED CONTROL CABINET	1	---
48	WASTE COLLECTOR	1	---
49	SOILED DISHTABLE	1	---
50	MOBILE TRAY/TRASH/RECYCLING COUNTER	1	LOCATED AT COMMONS EXIT

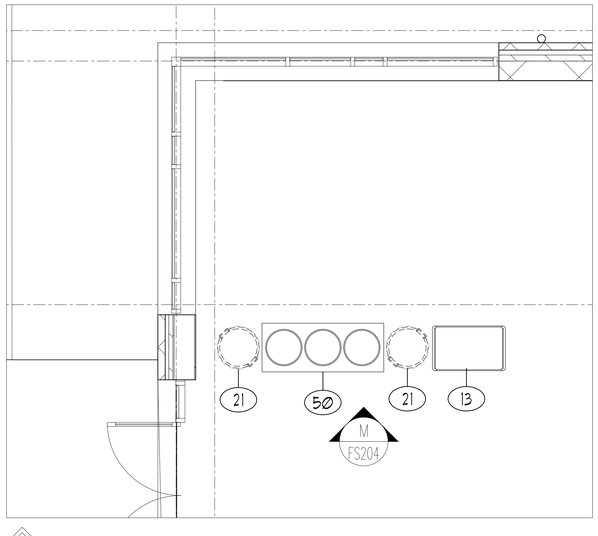

2 FIRST FLOOR - BUSSING AT NW CORNER OF DINING
1/4" = 1'-0"

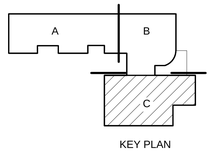

KEY PLAN

PIVOT ARCHITECTURE

HALLIDAY ARCHITECTURE
555 - 24TH AVENUE EAST
EUGENE, OREGON 97405
PH: 541.345.1359
FAX: 541.345.0223
SPACE PLANNING & DESIGN

Bid Set
Eugene School District
Enter address here
River Road / El Camino del Rio Elementary

Food Service Equipment Plan

PROJECT #:	13337
ISSUE DATE:	10 February 2016
DRAWN:	SH
CHECKED:	LB

REVISIONS:

FS101

© 2015 PIVOT ARCHITECTURE

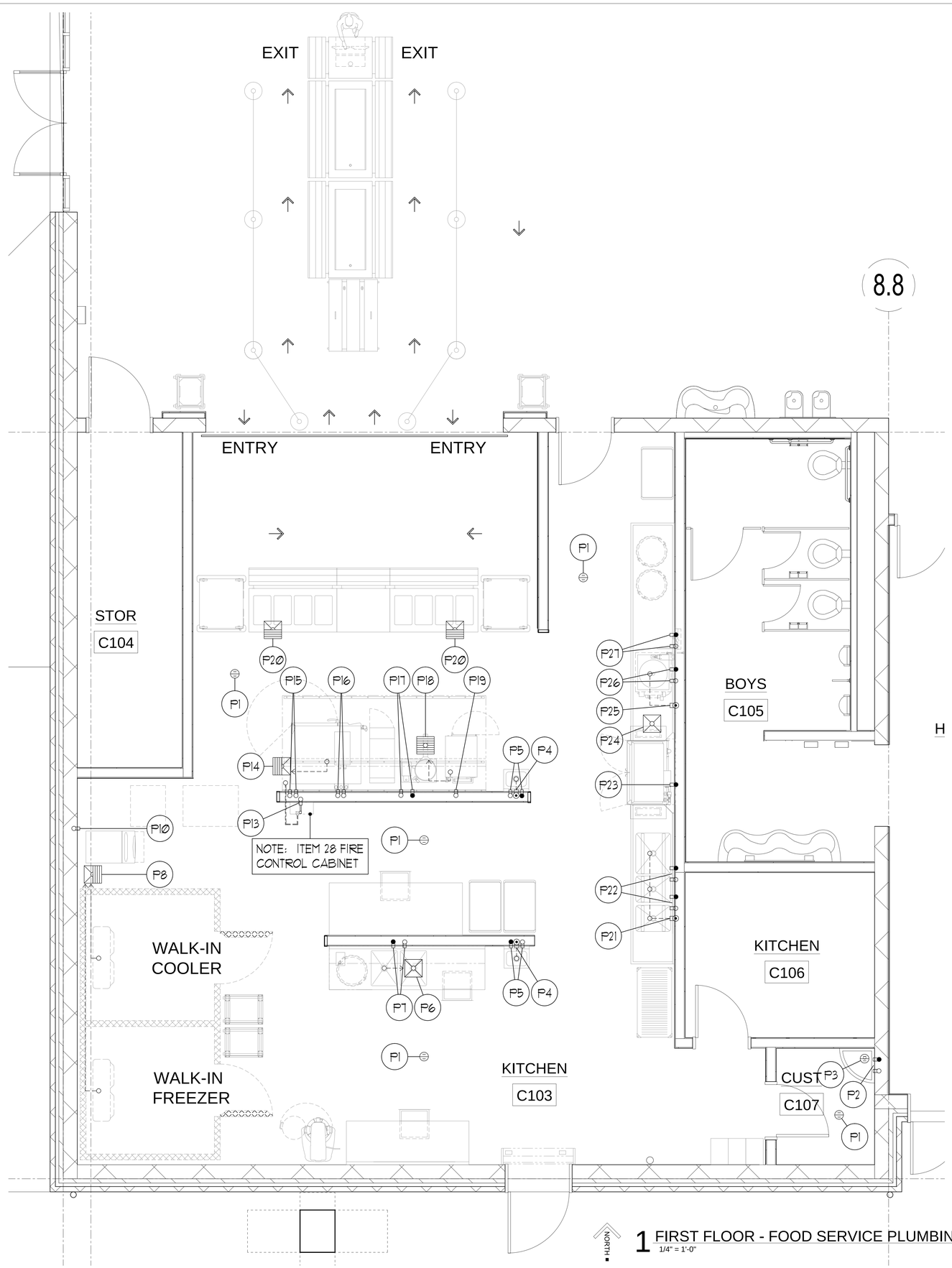

1 FIRST FLOOR - FOOD SERVICE PLUMBING PLAN
1/4" = 1'-0"

PLUMBING SCHEDULE

ITEM NO.	P. NO.	SIZE	DESCRIPTION	LOCATION	HEIGHT	SERVICE TO :	REMARKS:
---	P1	---	FLOOR DRAIN	FLOOR	-1/2"	AREA DRAIN	---
4	P2	---	HOT & COLD	---	---	JANITOR SINK	REQUIREMENTS BY DIVISION 22
4	P3	---	FLOOR DRAIN	---	---	JANITOR SINK	REQUIREMENTS BY DIVISION 22
20	P4	1 1/2"	WASTE	WALL	20"	HAND WASHING SINK	---
20	P5	1/2"	HOT & COLD	WALL	22"	HAND WASHING SINK	10 GPH HOT
22	P6	12" x 12"	FLOOR SINK	FLOOR	0"	(2) SINK DRAINS	NO GRATE
22	P7	1/2"	HOT & COLD	WALL	20"	SINK FAUCET	20 GPH HOT
8	P8	12" x 12"	FLOOR SINK	FLOOR	0"	WALK-IN EVAPORATOR DRAINS & ICE MACHINE	HALF GRATE
---	P9	---	NOT USED	---	---	---	---
19	P10	1/2"	COLD	WALL	40"	CUBE ICE MACHINE	---
---	P11	---	NOT USED	---	---	---	---
---	P12	---	NOT USED	---	---	---	---
28	P13	1"	COLD	WALL	110"	ANSUL PIRANHA FLOOD FIRE PROTECTION SYS.	---
33	P14	12" x 12"	FLOOR SINK	FLOOR	0"	DOUBLE STACK COMBI-OVEN STEAMERS	HALF GRATE
33	P15	3/4"	COLD	WALL	6" / 41"	DOUBLE STACK COMBI-OVEN STEAMERS	INTERCONNECT TO WATER FILTRATION SYS. FOR GENERATORS
33	P16	3/4"	COLD	WALL	6" / 41"	DOUBLE STACK COMBI-OVEN STEAMERS	FOR CONDENSER
30	P17	1/2"	HOT & COLD	WALL	24"	KETTLE PANTRY FAUCET	10 GPH HOT
30	P18	12" x 12"	FLOOR SINK	FLOOR	0"	20-GALLON TILTING KETTLE AND	CONVECTION STEAMER. FULL GRATE WITH CENTER OPENING
31	P19	3/4"	COLD	WALL	39"	CONVECTION STEAMER	INTERCONNECT TO WATER FILTRATION SYSTEM
34	P20	12" x 12"	FLOOR SINK	FLOOR	0"	HOT FOOD SERVING STATION	HALF GRATE
44	P21	2"	WASTE	WALL	14"	(3) SINK DRAINS	---
44	P22	1/2"	HOT & COLD	WALL	20"	SINK FAUCETS	20 GPH HOT
46	P23	1/2"	HOT @ 110°	WALL	64"	WAREWASHER WITH BOOSTER HEATER	126 GPH HOT @ 20 PSI
46	P24	12" x 12"	FLOOR SINK	FLOOR	0"	WAREWASHER WITH BOOSTER HEATER	NO GRATE
48	P25	2"	WASTE	WALL	7"	WASTE COLLECTOR	---
48	P26	3/4"	HOT & COLD	WALL	18"	WASTE COLLECTOR	50 GPH HOT
47	P27	1/2"	HOT & COLD	WALL	78"	HOSE REEL WITH RECESSED CONTROL CABINET	40 GPH HOT

PLUMBING NOTES

1. THIS DRAWING IS NOT TO BE USED FOR ESTABLISHING ROUGH-IN LOCATIONS. REFER TO DIMENSIONED DRAWING PREPARED BY THE KITCHEN EQUIPMENT CONTRACTOR.
2. UNDER PLUMBING WORK OF DIVISION 22, MAKE ALL ROUGH-INS AND FINAL CONNECTIONS IN CONFORMANCE WITH LOCAL CODES. PROVIDE SHUT-OFF VALVES WITH PERMANENT NAME TAGS IDENTIFYING SUPPLY LINES TO EACH INDIVIDUAL PIECE OF EQUIPMENT. INCLUDE TRAPS, TAIL PIECES, AND LINE STRAINERS AS REQUIRED.
3. UNDER PLUMBING WORK OF DIVISION 22, FURNISH AND INSTALL ALL FLOOR SINKS AND AREA DRAINS FLUSH WITH FINISHED FLOOR IF CODE ALLOWS.
4. UNDER PLUMBING WORK OF DIVISION 22, FURNISH AND INSTALL GREASE TRAP OR INTERCEPTOR AS REQUIRED.
5. UNDER PLUMBING WORK OF DIVISION 22, FURNISH AND INSTALL ALL SINK WASTE LINES. USE COPPER TUBING UNEXPOSED AND PAINTED WHERE LINES ARE VISIBLE. NO PVC PIPING IS ACCEPTABLE.
6. UNDER KITCHEN EQUIPMENT WORK OF DIVISION 11, FURNISH AND INSTALL ALL INDIRECT WASTE LINES FROM EQUIPMENT LOCATED AT CUSTOM COUNTERS. USE COPPER TUBING AND PAINT VISIBLE LINES. NO PVC PIPING IS ACCEPTABLE.
7. UNDER KITCHEN EQUIPMENT WORK OF DIVISION 11, PROVIDE FAUCETS AT EQUIPMENT. UNDER PLUMBING WORK OF DIVISION 22, INSTALL AND CONNECT FAUCETS.
8. UNDER PLUMBING WORK OF DIVISION 22, FURNISH AND INSTALL CHROME PLATED VACUUM BREAKERS OR BACKSYPHONING DEVICES ON SUPPLY LINES TO EQUIPMENT AS REQUIRED BY CODES.
9. UNDER PLUMBING WORK OF DIVISION 22, FURNISH AND INSTALL STAINLESS STEEL OR CHROME PLATED ESCUTCHEON PLATES FOR ALL WATER LINES PENETRATING COUNTER TOPS AND BACK SPLASHES.
10. UNDER PLUMBING WORK OF DIVISION 22, FURNISH PRESSURE REDUCING VALVE FOR ALL STEAM, AND WATER LINES. MAXIMUM WATER PRESSURE AT BOOSTER HEATER AND DISHWASHER SHALL BE 20 PSI.
11. UNDER KITCHEN EQUIPMENT WORK OF DIVISION 11, FURNISH AND INSTALL WALK-IN COLD STORAGE ROOM EVAPORATOR COPPER DRAIN LINES. TRAP AT OUTLET END.
12. UNDER PLUMBING WORK OF DIVISION 22, PROVIDE 120 DEGREE HOT WATER SUPPLY AT WAREWASHER/ BOOSTER HEATER AND HIGH PRESSURE WASH SYSTEM AS SHOWN. VERIFY REQUIRED TEMPERATURE FOR SUPPLY AT SINK FAUCETS WITH LOCAL AND NATIONAL CODES.
13. UNDER PLUMBING WORK OF DIVISION 22, FURNISH AND INSTALL A SOLENOID VALVE ON PRIMARY GAS SUPPLY TO SHUT-OFF EQUIPMENT DURING FIRE SYSTEM ACTIVATION. SOLENOID SHALL BE ACCESSIBLE FOR SERVICING, TESTING, AND RESETTING IN THE EVENT OF SYSTEM ACTIVATION.
14. SEE PLUMBING AND MECHANICAL DRAWINGS FOR ADDITIONAL REQUIREMENTS.

PLUMBING SYMBOL LEGEND

COLD WATER	
HOT WATER	
WASTE	
GAS	
FLOOR DRAIN	
FLOOR SINK	

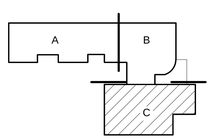

KEY PLAN

PIVOT ARCHITECTURE

HALLIDAY ENGINEERING

Bid Set

Eugene School District
Enter address here
River Road / El Camino del Rio Elementary

Food Service Plumbing Plan

PROJECT #	1337
ISSUE DATE	10 February 2016
DRAWN	SH
CHECKED	LB
REVISIONS	

FS102

© 2015 PIVOT ARCHITECTURE

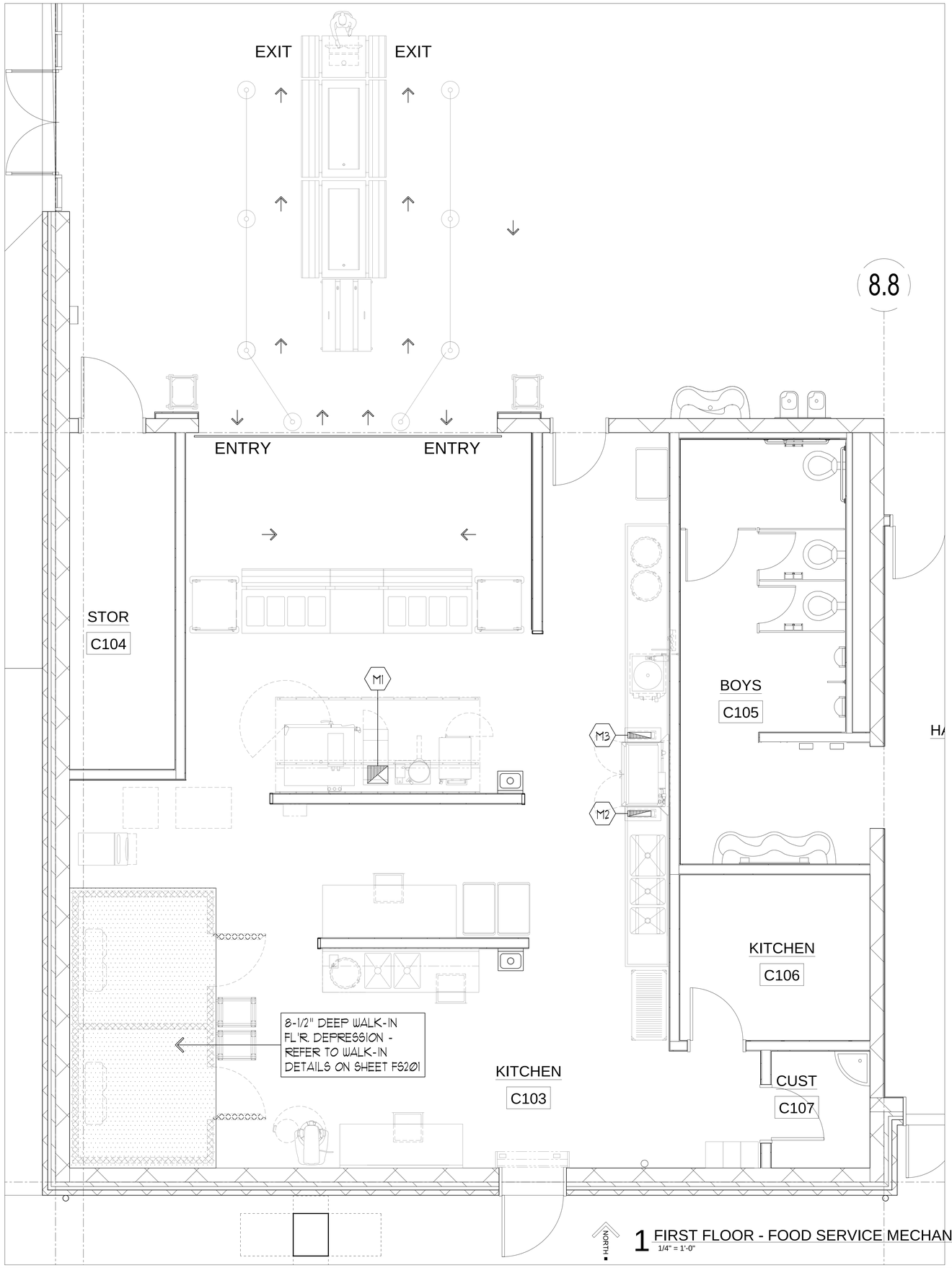

1 FIRST FLOOR - FOOD SERVICE MECHANICAL PLAN
1/4" = 1'-0"

MECHANICAL NOTES

M1. ONE (1) 12" X 14" TYPE I EXHAUST DUCT CONNECTION AT CANOPY HOOD. 1720 CFM WITH Ø.56" STATIC PRESSURE AT DUCT COLLAR.

M2. ONE (1) 4" X 16" EXHAUST DUCT CONNECTION AT WAREWASHER UNLOAD END. 400 CFM WITH .25" STATIC PRESSURE AT DUCT COLLAR.

M3. ONE (1) 4" X 16" EXHAUST DUCT CONNECTION AT WAREWASHER LOAD END. 200 CFM WITH .25" STATIC PRESSURE AT DUCT COLLAR.

DEPRESS./MECHANICAL SYMBOL LEGEND

EXHAUST DUCT

FLOOR DEPRESSION

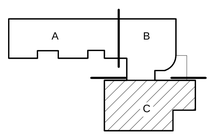

KEY PLAN

PIVOT ARCHITECTURE

HALLIDAY ENGINEERING

Bid Set

Eugene School District
Enter address here

River Road / El Camino del Rio Elementary

Food Service Mechanical Plan

PROJECT #:	1337
ISSUE DATE:	10 February 2016
DRAWN:	SH
CHECKED:	LB

REVISIONS:

FS102

- 2015 PIVOT ARCHITECTURE

GENERAL NOTES FOR NON–WATER WASH VENTILATORS

ELECTRICAL

1. Locate Fan Start/Stop Switch in a convenient location. Refer to the wiring diagram for required voltage.
2. If ventilators are equipped with light fixtures, provide a separate light circuit to the ventilator as shown on electrical plan.

EXHAUST VOLUME REQUIREMENTS

3. Exhaust Volumes as shown on the drawings are determined by established Gaylord engineering methods and in accordance with the terms of the ventilator's listing. These air volume levels require that the make-up air be brought into the space in such a way that it does not negatively affect the ventilator. See the Make-up Air Requirements and the "Typical Design" drawing.
4. Ventilator static pressure is noted on each ventilator plan view. Total duct system and other external static's must be added to the ventilator static for determining the total system static pressure drop. Static based on operation at mean sea level at 75°F kitchen ambient.

MAKE-UP AIR REQUIREMENTS

5. Make-up air is critical to the performance of the ventilator.
6. The total amount of make-up air (supply air) brought into the kitchen must be between 90% and 100% of the total exhaust volume. It should be brought in throughout the kitchen evenly for best results. See the "Typical Design" drawing.

AIR FLOW RATES

7. Exhaust and Supply Air Flow Rates were established under controlled laboratory conditions. Greater Exhaust and/or lesser Supply Air Flows may be required for complete vapor removal in specific installations.

INSTALLATION

8. Ventilators to be installed in accordance with NFPA-96 and all other local applicable codes. Contractors must review applicable codes with code authorities before approving drawings for fabrication. Special attention must be given to code regulations relative to clearances from surrounding combustible and limited combustible construction (walls, ceiling, etc.).
9. Ventilators manufactured in multiple sections are factory pre-wired to a single connection point. Ventilator wiring is disconnected for shipment to be reconnected by electrical contractor.
10. Ventilators manufactured in multiple sections may have drains factory interconnected (see drawing) to a single outlet point. Ventilator plumbing is disconnected for shipment to be reconnected by plumbing contractor.
11. All ductwork beyond the ventilator duct take-off collar to be provided and installed by others, in accordance with applicable codes. Exhaust ducts must be continuously welded liquid tight.
12. All ventilators are equipped with hanging brackets. Hanging rods to be supplied by ventilator installer. Hanging weight of the ventilator(s) is noted on each drawing.
13. Ventilators manufactured in multiple sections are provided with bolts, clips, and all necessary hardware for reconnecting by the ventilator installer.

CONSTRUCTION

14. Ventilators are manufactured in strict accordance with Gaylord specifications.
15. Ventilators constructed of 18 Ga. stainless steel, Type 300 series, No. 4 finish unless otherwise noted on drawings.

FIRE EXTINGUISHING SYSTEM

16. Fire extinguishing system to be installed in accordance with NFPA-96. Refer to "FIRE PROTECTION SYSTEM NOTES" for information on supplier and installation.
17. Caution: Fire extinguishing system piping installed on the ventilator at job site should be coordinated with Gaylord to ensure piping does not interfere with the ventilator's operation/performance. Improper installation may void the Listings of the ventilator.
18. IMPORTANT NOTE: NFPA-96 requires that all gas and electric cooking equipment, that is protected by surface fire protection, must automatically shut off upon activation of the fire extinguishing system.
19. IMPORTANT NOTE: Most building departments require separate hood and fire protection permits prior to installation. The hood permit is typically obtained through the plan review department and the fire protection permit from the fire prevention bureau. It is the responsibility of the installing contractor to check with local building departments for their requirements and to obtain necessary permits.

LIGHTING

20. Light fixtures in ventilators will provide less than 30 foot candles of light at the cooking surface as a standard, unless otherwise noted on Section View. Confirm if this amount of light is acceptable with local health codes.

SPACE CONDITIONS IN HOT AND HUMID CLIMATES / STEAM COOKING EQUIPMENT

Gaylord recommends the kitchen temperature be kept between 74°F to 79°F with a dew point not exceeding 55°F to prevent excess condensation and or dripping in the hood over heavy steam producing equipment such as Steamers, Kettles, Dim Sum Counters, etc. If this is not possible, please consult the factory for increased air volume levels to prevent condensation buildup and potential dripping. Please refer to ASHRAE STD's 62.1-2010, 55-2010, and "The ASHRAE Guide for Buildings in Hot & Humid Climates" to address occupancy comfort and reduce the growth of pathogenic or allergenic organisms. It should be noted that exceeding these values can result in increased potential for unsanitary conditions.

THE GAYLORD VENTILATOR TESTING, LISTING AND COMPLIANCE REFERENCES:

IMPORTANT NOTE: Gaylord Ventilators are designed to meet the National codes listed below. Local codes may vary. Gaylord Industries must be notified in writing of local codes that may affect the ventilator design.

NATIONAL FIRE PROTECTION ASSOCIATION
The exhaust ventilator meets all requirements of the latest edition of NFPA-96.

NATIONAL SANITATION FOUNDATION
The exhaust ventilator is NSF listed to:
Standard #2 - "Food Service Equipment"

INTERNATIONAL & UNIFORM MECHANICAL CODE
The exhaust ventilator meets all requirements of IMC and UMC.

UNDERWRITERS LABORATORIES, INC.
The exhaust ventilator is UL Listed. *

INTERTEK TESTING SERVICES
The exhaust ventilator is ETL Listed. *

* UL and ETL listed exhaust ventilators are tested to standard:
UL 710 - "Exhaust Hoods for Commercial Cooking Equipment".

Intertek

APPROVAL NOTICE

Prior to releasing the ventilator for fabrication, this drawing must be signed by an authorized representative of the company ordering the equipment and returned to GAYLORD INDUSTRIES. By approving these drawings, the company ordering the equipment agrees to the general notes, accepts the equipment as shown, and has verified the following have been checked:

IMPORTANT NOTICE

1. All dimensions such as duct size and location, drain and hot water location, ceiling height, overall size of ventilator, clearances to beams and other obstructions.
2. The location of the cooking equipment in relation to the ventilator is correct as shown for proper placement of the surface fire protection nozzles.

APPROVED FOR FABRICATION

Any changes in cooking equipment location, necessitating the relocation of the surface fire protection nozzles must be brought to the attention of GAYLORD INDUSTRIES in writing, prior to the kitchen being turned over to operating personnel.

☐ Revise and Resubmit

☐ Without changes
☐ With changes as shown

Signature Date

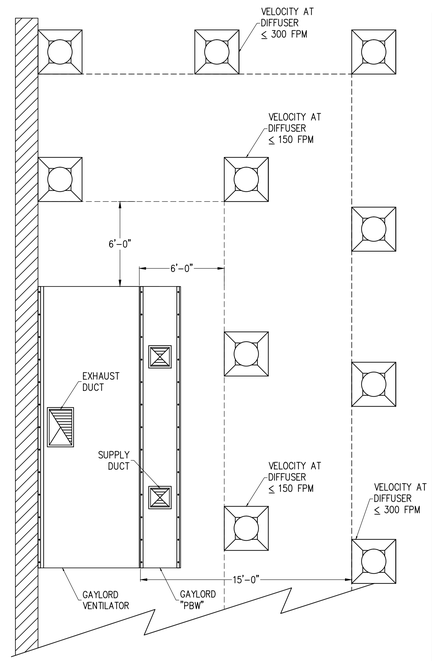

Gaylord Capture Performance Guarantee

Gaylord warrants the Capture Performance of the ventilator, only if the Exhaust Air Volumes are correct, per the Exhaust Air Volume Guidelines, and the Make-up Air Volumes are correct and the make-up air is delivered correctly, per the Make-up Air Delivery Guidelines as stated below.

Exhaust Air Volume Guidelines:

1. The amount of air exhausted by the Gaylord Ventilator shall be between 100% and 110% of the values shown on the Plan View for the Exhaust Ducts for each ventilator

Make-up Air Delivery Guidelines:

1. Gaylord "PBW" Plenum boxes shall be included for each ventilator
2. The amount of make-up air delivered through the Gaylord "PBW" plenum boxes shall be between 90% and 100% of the values shown on the Plan View for the Supply Ducts for each ventilator
3. The make-up air delivered using Gaylord "PBW" plenum boxes shall not exceed 60% of the exhaust volume of the ventilator
4. Ceiling diffusers shall be at least 6'-0" from all sides of the ventilator and the velocity at the diffuser shall not exceed 150 Feet per Minute (FPM)
   OR
   Ceiling diffusers shall be 15'-0" from all sides of the ventilator and the velocity at the diffuser shall not exceed 300 Feet per Minute (FPM)
5. The maximum velocity of the make-up air from Transfer Air, Diffusers, etc. shall not exceed 75 FPM at the ventilator lip
6. Cross drafts from pass through windows, hallways, or other openings shall not exceed 50 FPM
7. All forms of make-up air introduction (PBW, Transfer Air, Diffusers, etc.) must be evenly distributed around each ventilator to prevent unequal pressurization
8. Kitchen pressurization shall not exceed -0.02"W.G. relative to the dining or adjacent spaces, as stated in NFPA-96 and ASHRAE Standard 154
9. For more information on acceptable methods of Make-up Air Delivery reference ASHRAE Standard 154.

Following these guidelines will result in proper capture and containment at the ventilator and enact the Gaylord Capture Performance Guarantee. If jobsite conditions cannot accommodate these guidelines, consult factory for alternative design.

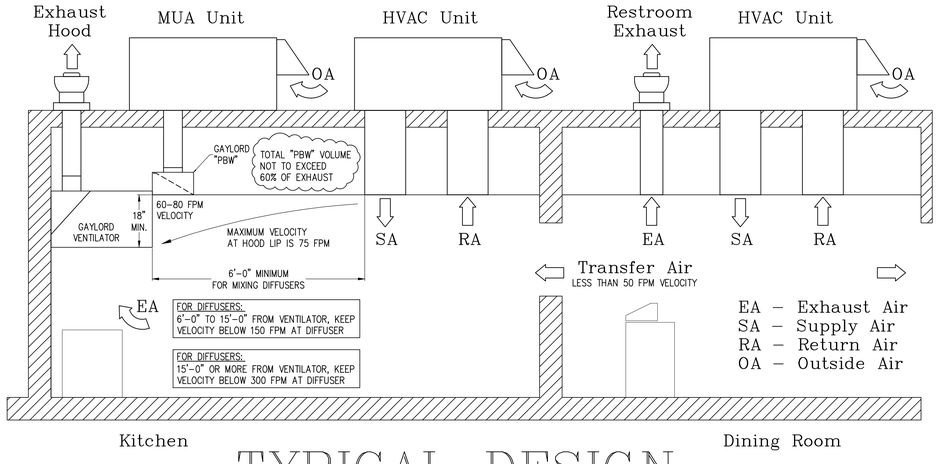

TYPICAL DESIGN

DIMENSION TOLERANCE ± 1/4" (6mm)

INSTALLATION INFORMATION

REV	DRWN.BY	DATE	REVISIONS	CHECKED BY

This plan is made from available information, but measurements are to be verified by contractors, installers and others in connection with this job. Gaylord Industries accepts no responsibility for work done by contractors, installers and others, and will not stand any expense for charges made necessary by local building codes, ordinances, structural conditions or by the substitution or changes in equipment shown in this plan. This plan must be verified and approved by proper parties before fabrication can be started and approval shall not be made unless contractors, installers and others have reviewed applicable codes with code authorities. Reference is made to the general notes, which are a part of these plans and all contractors, installers and others utilizing these plans are advised they are responsible for examining and becoming familiar with said general notes before commencing any work hereunder. Any inconsistencies between these plans and the general notes, or between these plans, the general notes, and local building codes or ordinances must be immediately called to the attention of Gaylord Industries in writing so that any such inconsistencies can be resolved. Gaylord Industries must be notified of any changes made to the plan in a clear and conspicuous manner. Gaylord Industries will not be responsible for any incidental or consequential damages incurred by others as a result of contractors, installers and others failure to notify Gaylord of changes to the plan.

ATTENTION – This plan is the property of Gaylord Industries and is confidential and proprietary. It is not to be copied, reproduced, or distributed, in whole or part, nor be used in anyway detrimental to Gaylord Industries. If you have received this plan without Gaylord's permission, please (i) do not read it, (ii) reply to the sender that you received the drawing in error, and (iii) erase and/or destroy the drawing.

GAYLORD® INDUSTRIES
10900 S.W. AVERY ST.
TUALATIN, OR 97062
TELEPHONE: (503) 691–2010
TOLL FREE: (800) 547–9696
FAX NO.: (503) 692–6048
E–MAIL: gaylord@gaylordusa.com

MODEL #			ITEM #		WORK ORDER #
DRAWN BY: RS	CHECKED BY:	ELECT. CHECK:	F.P. CHECK:	S.E. APPROVAL:	

RIVER ROAD ELEMENTARY SCHOOL
EUGENE, OR

DRAWING NO.:	DATE:		REV:	SHEET NO.:
15–0854	07–21–15		01	1

GAYLORD®

1 FIRST FLOOR - FOOD SERVICE CANOPY HOOD DETAILS
NO SCALE

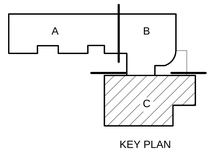

KEY PLAN

PIVOT ARCHITECTURE

HALLIDAY PROJECT MANAGEMENT
855 – 24TH AVENUE EAST
SEATTLE, WA 98112
PH NO: 206.324.4000
FAX NO: 206.324.5433
SPACE PLANNING & DESIGN

Bid Set
Eugene School District
Enter address here
River Road / El Camino del Rio Elementary

Food Service Canopy Hood Details

PROJECT #	1337
REVISIONS	
ISSUE DATE:	10 February 2016
DRAWN	SH
CHECKED	LB

FS103A

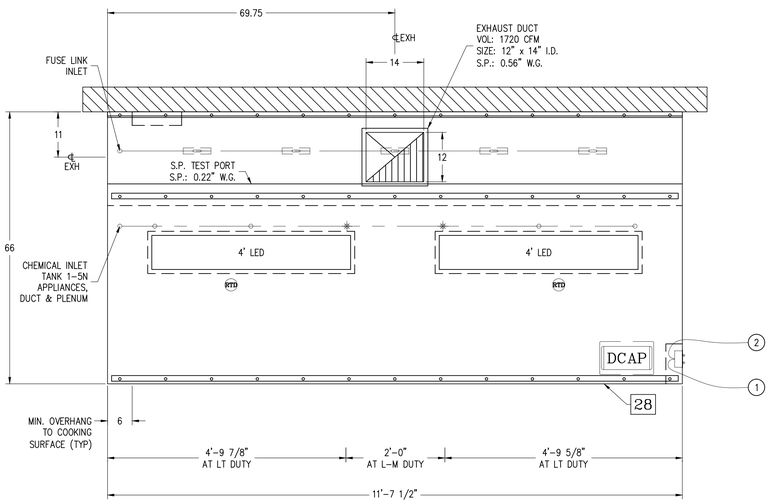

PLAN VIEW

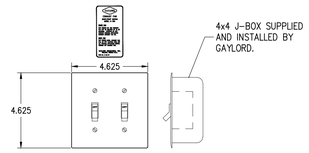

FAN ON-OFF SWITCH/LIGHT SWITCH
Model C-150-LS

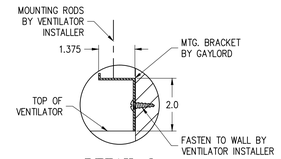

DETAIL 2

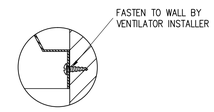

DETAIL 1

WARNING: ANY CHANGES IN THE HOOD DESIGN OR MAKES/MODELS OF COOKING EQUIPMENT MAY AFFECT THE SIZE OF AND/OR REQUIRED AIRFLOWS FOR THE HOOD. NOTE: COOKING EQUIPMENT MODEL, MANUFACTURER & LOCATION MUST BE VERIFIED FOR FIRE PROTECTION PRIOR TO FABRICATION.

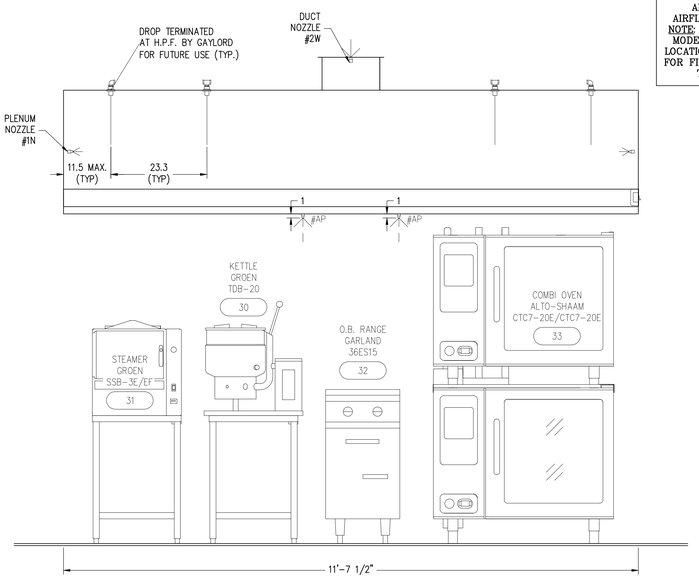

ELEVATION VIEW

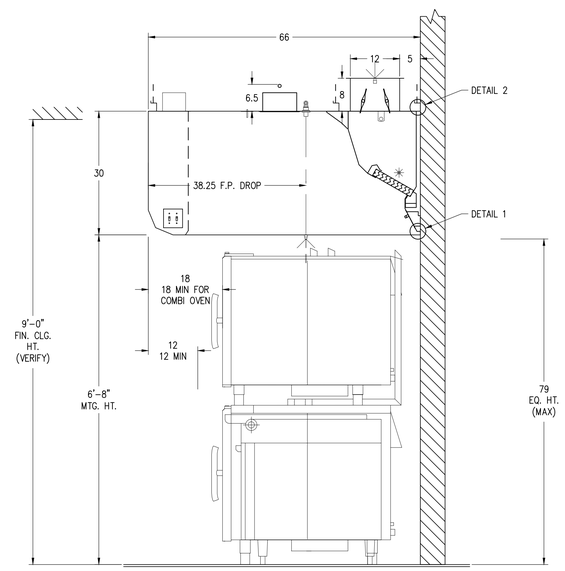

SECTION VIEW

VENTILATOR NOTES (NON-WATER WASH)

A) VERIFY ALL MAKES AND MODELS OF COOKING EQUIPMENT AND LOCATION IN RELATION TO VENTILATOR PRIOR TO FABRICATION.

B) FRONT AND REAR MOUNTING BRACKETS HAVE ø0.625" HOLES. BRACKETS TO BE SUPPORTED WITHIN 12" OF EACH END OF EACH SECTION, WITH A MAXIMUM SPAN OF 72" BETWEEN SUPPORTS.

C) INTERIOR MOUNTING BRACKET(S) TO BE SUPPORTED WITHIN 36" OF EACH END OF EACH SECTION, WITH A MAXIMUM SPAN OF 72" BETWEEN SUPPORTS.

VERIFY EXHAUST & SUPPLY FANS

A) VERIFY IF THIS HOOD IS EXHAUSTED ON ITS OWN EXHAUST FAN OR IS IT EXHAUSTED ON A COMMON EXHAUST FAN SHARED WITH OTHER HOODS.

B) VERIFY NUMBER OF SUPPLY (MAKE-UP AIR) FANS.

LIGHTING NOTE

THIS LIGHTING IN THIS VENTILATOR IS DESIGNED TO PROVIDE 50 FOOT CANDLES OF LIGHT AT THE COOKING SURFACE, IF 50 FOOT CANDLES OF LIGHTING IS PROVIDED IN THE SURROUNDING SPACE.

USE LED LIGHT FIXTURES, AND LED BULBS PROVIDED BY GAYLORD.

VENTILATOR WIRING NOTES (NON-WATER WASH)

1. (6) WIRES AND GROUND, FOR DCA CONTROL, TO J-BOX ON TOP OF VENTILATOR BY ELECTRICAL CONTRACTOR. WIRED TO SUPPLY VOLTAGE, FP SYSTEM, AND FANS BY ELECTRICAL CONTRACTOR.

* LIGHT FIXTURES, VAPOR PROOF, U.L. LISTED, FURNISHED, INSTALLED AND WIRED BY GAYLORD. *

2. (2) WIRES AND GROUND, FOR LIGHT(S), TO J-BOX ON TOP OF VENTILATOR BY ELECTRICAL CONTRACTOR. WIRED TO SUPPLY VOLTAGE BY ELECTRICAL CONTRACTOR.

VERIFY CEILING CONDITIONS

EXACT FLOOR TO STRUCTURAL CEILING AND FLOOR TO FINISH CEILING HEIGHTS MUST BE VERIFIED FOR VENTILATOR DESIGN. INCORRECT HEIGHTS MAY CAUSE THE VENTILATOR TO NOT FIT PROPERLY OR COMPLY WITH CLEARANCES SPECIFIED IN APPLICABLE CODES AND STANDARDS. CAUTION: IF THE FINISHED CEILING IS HIGHER THAN THE TOP OF THE VENTILATOR, ENCLOSURE PANELS MAY BE REQUIRED.

FLOOR TO STRUCTURAL CEILING: (VERIFY)

FLOOR TO FINISH CEILING: 9'-0" (VERIFY)

SHOP NOTES (T1)

* PIRANHA COMPONENTS

FIRE PROTECTION SYSTEM NOTES ANSUL PIRANHA-ASEF

FP-1) LOCATION OF FIRE PROTECTION NOZZLES MUST BE VERIFIED IN RELATION TO THE COOKING EQUIPMENT, PRIOR TO VENTILATOR FABRICATION.

COMPLETE SYSTEM INCLUDING APPLIANCE DROPS AND SURFACE MOUNTED DETECTION BRACKETS, WITH FIELD INSTALLATION BY GAYLORD.

ANSUL FIRE SYSTEM FACTORY PRE-PIPED CHEMICAL LINES INCLUDING DUCT, PLENUM AND APPLIANCE DROPS WITH ALL NOZZLES INSTALLED PER COOKING EQUIPMENT ARRANGEMENT ON GAYLORD APPROVED DRAWINGS. ALL EXPOSED CHEMICAL PIPING CHROME PLATED OR CHROME SLEEVED. INCLUDES FACTORY PRE-PIPED DETECTION LINES WITH SURFACE MOUNTED DETECTOR BRACKETS. INSTALLATION BY CERTIFIED FACTORY INSTALLERS.

INCLUDES:
* UNION LABOR AND PREVAILING WAGE
* TANK(S) AND RELEASE ASSEMBLY(S)
* CHEMICAL
* DETECTOR CABLE
* FUSIBLE LINKS WITH LINKAGE
* EXPELLANT GAS CARTRIDGE(S) (PROVIDED BY FIRE PROTECTION INSTALLER)
* (1) REMOTE MANUAL PULL STATION
* (1) GAS VALVE PER FIRE SYSTEM WITH A MAXIMUM SIZE OF 2-1/2"
* (1) MANUAL RESET RELAY PER FIRE SYSTEM, IF REQUIRED
* PLANS AND PERMITS (ON JOBS INSIDE OF THE UNITED STATES AND NON-MARINE JOBS)
* PARTS AND INSTALLATION OF CHEMICAL AND DETECTION LINES FROM TANK(S) TO CONNECTION POINTS ON HOOD
* INSTALLATION OF TANKS AND RELATED COMPONENTS
* INSTALLATION OF DETECTOR CABLE AND FUSIBLE LINKS
* INSTALLATION OF REMOTE MANUAL PULL STATION
* JOB SITE REPOSITIONING OF NOZZLES AS PER GAYLORD APPROVED DRAWINGS, IF REQUIRED TO MEET SYSTEM DESIGN REQUIREMENTS
* TRIP TEST AND CERTIFICATION (ON JOBS INSIDE OF THE UNITED STATES AND NON-MARINE JOBS)
* (1) LOCKABLE FULL-FLOW INDICATING SHUT-OFF VALVE WITH A MAXIMUM SIZE OF 1-1/4"

EXCLUDES:
* INSTALLATION OF GAS VALVE(S)
* ELECTRICAL DISCONNECTS
* PARTS AND LABOR FOR ANY ELECTRICAL INTERCONNECTIONS
* JOB SITE REPOSITIONING OF NOZZLES IF COOKING EQUIPMENT IS NOT INSTALLED PER GAYLORD APPROVED DRAWINGS
* PLANS AND PERMITS ON JOBS OUTSIDE OF THE UNITED STATES AND ON MARINE JOBS
* TRIP TEST AND CERTIFICATION ON JOBS OUTSIDE OF THE UNITED STATES AND ON MARINE JOBS
* HANDHELD FIRE EXTINGUISHER(S)
* INSPECTION AND SERVICING
* RECESSED ANSUL CABINET(S)
* INSTALLATION OF LOCKABLE FULL-FLOW INDICATING SHUT-OFF VALVE
* INSTALLATION OF WATER PIPING FROM SUPPLY TO CABINET

DIMENSION TOLERANCE ± 1/4" (6mm)

ANSUL PIRANHA-ASEF-7-5N	FP-28	15085402
ELX-GBD-A-DCA-66	28	15085401
MODEL #	ITEM #	WORK ORDER #

DRAWN BY:	CHECKED BY:	ELECT. CHECK:	F.P. CHECK:	S.E. APPROVAL:
RS				

RIVER ROAD ELEMENTARY SCHOOL

EUGENE, OR

DRAWING NO.:	DATE:		REV.:	SHEET NO.:
15-0854	07-21-15			02

GAYLORD®

INSTALLATION INFORMATION

MAXIMUM VENTILATOR DIMENSION:
11'-8"____ L. x 5'-6"____ W.
3'-2"____ H.
TOTAL ESTIMATED HANGING WEIGHT:
989__ LBS.

VENTILATORS MANUFACTURED IN MULTIPLE SECTIONS ARE PROVIDED WITH BOLTS, CLIPS, AND ALL NECESSARY HARDWARE FOR RECONNECTING BY THE VENTILATOR INSTALLER. CONTROL AND LIGHTING WIRING ARE PRE-WIRED AND DISCONNECTED FOR SHIPMENT. WIRING MUST BE RECONNECTED BY APPLICABLE TRADES.

REV	DRWN.BY	DATE	REVISIONS	CHECKED BY

This plan is made from available information, but measurements are to be verified by contractors, installers and others in connection with this job. Gaylord Industries accepts no responsibility for work done by contractors, installers and others, and will not stand any expense for charges made necessary by local building codes, ordinances, structural conditions or by the substitution or changes in equipment shown in this plan. This plan must be verified and approved by proper parties before fabrication can be started and approval shall not be made unless contractors, installers and others have reviewed applicable codes with code authorities. Reference is made to the general notes, which are a part of these plans and all contractors, installers and others utilizing these plans are advised they are responsible for examining and becoming familiar with said general notes before commencing any work hereunder. Any inconsistencies between these plans and the general notes, or between these plans, the general notes, and local building codes or ordinances must be immediately called to the attention of Gaylord Industries in writing so that any such inconsistencies can be resolved. Gaylord Industries must be notified of any changes made to the plan in a clear and conspicuous manner. Gaylord Industries will not be responsible for any incidental or consequential damages incurred by others as a result of contractors, installers and others failure to notify Gaylord of changes to the plan.

ATTENTION – This plan is the property of Gaylord Industries and is confidential and proprietary. It is not to be copied, reproduced, or distributed, in whole or part, nor be used in anyway detrimental to Gaylord Industries. If you have received this plan without Gaylord's permission, please (i) do not read it, (ii) reply to the sender that you received the drawing in error, and (iii) erase and/or destroy the drawing.

GAYLORD® INDUSTRIES
10900 S.W. AVERY ST.
TUALATIN, OR 97062
TELEPHONE: (503) 691-2010
TOLL FREE: (800) 547-9696
FAX NO.: (503) 692-6048
E-MAIL: gaylord@gaylordusa.com

1 FIRST FLOOR - FOOD SERVICE CANOPY HOOD DETAILS
NO SCALE

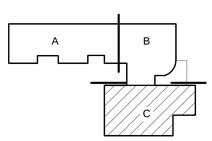

KEY PLAN

© 2015 PIVOT ARCHITECTURE

PIVOT ARCHITECTURE

HALLIDAY PROFESSIONAL CONSULTANTS
6565 SW HOWARD
PORTLAND, OR 97223
PH 503.639.5253
FAX NO. 503.639.5263
SPACE PLANNING & DESIGN

Bid Set
Eugene School District
Enter address here
River Road / El Camino del Rio Elementary

Food Service Canopy Hood Details

PROJECT #:	1337
ISSUE DATE:	19 February 2015
DRAWN:	SH
CHECKED:	LB
REVISIONS:	

FS103B

© 2015 PIVOT ARCHITECTURE

GAYLORD AUTOSTART DCA NOTES

A) INSTALLED IN HOOD
B) PRESET TO 90°F AT FACTORY
C) IN SOME CLIMATES AND/OR CONDITIONS, IT MAY BE NECESSARY TO ADJUST THE TEMPERATURE SETTING IN THE FIELD BY OTHERS

WIRING NOTES

E-1) ALL EXTERNAL CONTROL WIRING SHALL BE 12 GAUGE MINIMUM OR AS PER APPLICABLE CODES.

E-2) THE HOLDING COILS WITHIN THE MAGNETIC STARTERS MUST MATCH THE SUPPLY VOLTAGE. MAGNETIC STARTERS ARE SUPPLIED BY OTHERS.

— — FIELD WIRING BY OTHERS
—— WIRING BY GAYLORD

WHEN USING MULTIPLE LIGHT SWITCHES ON ONE CIRCUIT, VERIFY THAT THE LOAD DOES NOT EXCEED 15 AMPS (MAX.) IF IT DOES, USE MULTIPLE CIRCUITS.

SUPPLY VOLTAGE
[x] 120V
[ ] 220V
[ ] 50Hz
[x] 60Hz

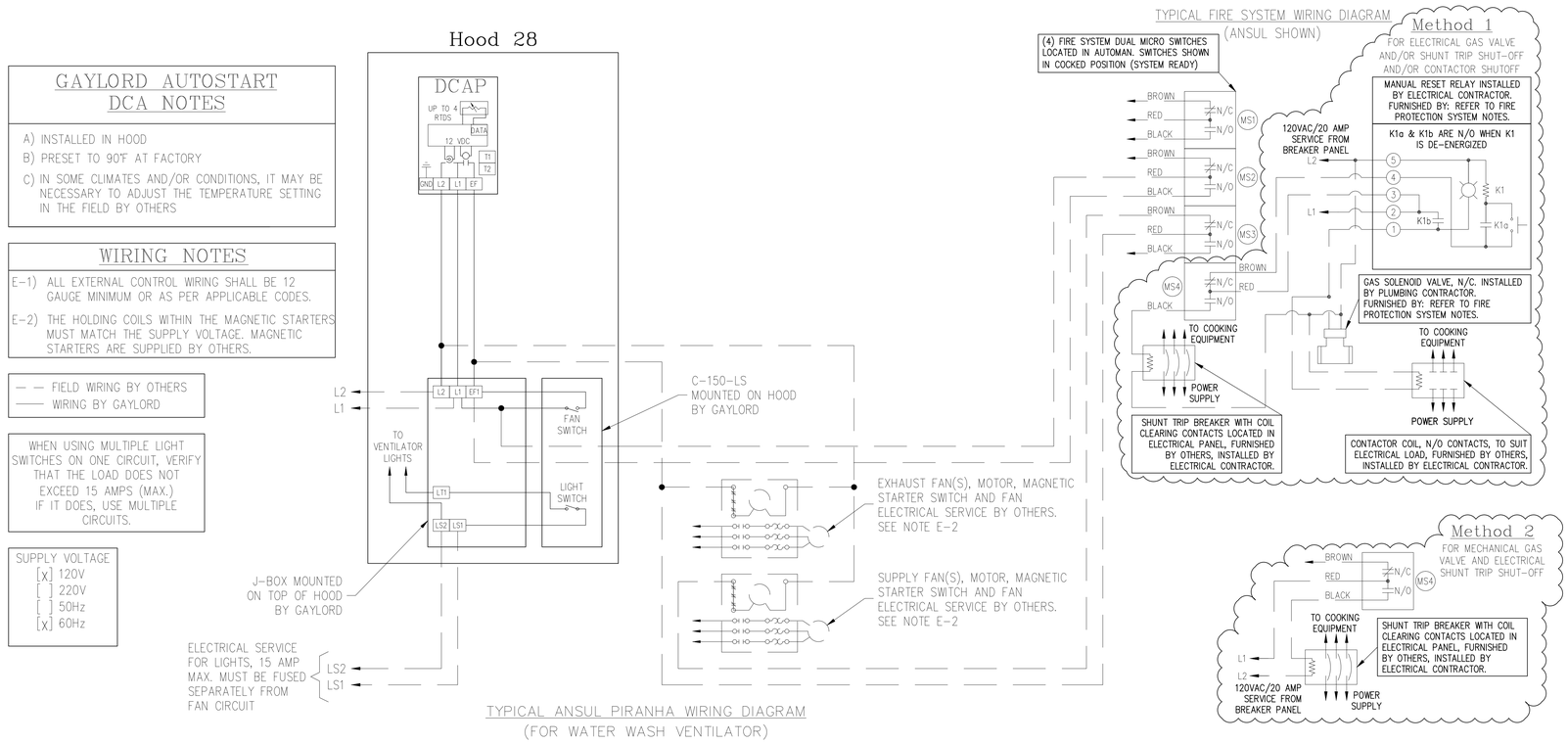

DIMENSION TOLERANCE ± 1/4" (6mm)

ANSUL PIRANHA-ASEF-7-5N	FP-28	15085402
ELX-GBD-A-DCA-66	28	15085401
MODEL #	ITEM #	WORK ORDER #

DRAWN BY: RS | CHECKED BY: | ELECT. CHECK: | F.P. CHECK: | S.E. APPROVAL:

RIVER ROAD ELEMENTARY SCHOOL
EUGENE, OR

DRAWING NO.: 15-0854 | DATE: 07-21-15 | REV.: | SHEET NO.: 03

INSTALLATION INFORMATION

REV	DRWN.BY	DATE	REVISIONS	CHECKED BY

This plan is made from available information, but measurements are to be verified by contractors, installers and others in connection with this job. Gaylord Industries accepts no responsibility for work done by contractors, installers and others, and will not stand any expense for charges made necessary by local building codes, ordinances, structural conditions or by the substitution or changes in equipment shown in this plan. This plan must be verified and approved by proper parties before fabrication can be started and approval shall not be made unless contractors, installers and others have reviewed applicable codes with code authorities. Reference is made to the general notes, which are a part of these plans and all contractors, installers and others utilizing these plans are advised they are responsible for examining and becoming familiar with said general notes before commencing any work hereunder. Any inconsistencies between these plans and the general notes, or between these plans, the general notes, and local building codes or ordinances must be immediately called to the attention of Gaylord Industries in writing so that any such inconsistencies can be resolved.

Gaylord Industries must be notified of any changes made to the plan in a clear and conspicuous manner. Gaylord Industries will not be responsible for any incidental or consequential damages incurred by others as a result of contractors, installers and others failure to notify Gaylord of changes to the plan.

ATTENTION – This plan is the property of Gaylord Industries and is confidential and proprietary. It is not to be copied, reproduced, or distributed, in whole or part, nor be used in anyway detrimental to Gaylord Industries. If you have received this plan without Gaylord's permission, please (i) do not read it, (ii) reply to the sender that you received the drawing in error, and (iii) erase and/or destroy the drawing.

GAYLORD® INDUSTRIES
10900 S.W. AVERY ST.
TUALATIN, OR 97062
TELEPHONE: (503) 691-2010
TOLL FREE: (800) 547-9696
FAX NO.: (503) 692-6048
E-MAIL: gaylord@gaylordusa.com

1 FIRST FLOOR - FOOD SERVICE CANOPY HOOD DETAILS
NO SCALE

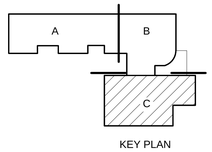

KEY PLAN

PIVOT ARCHITECTURE

HALLIDAY PROJECT ARCHITECTS, LLC
555 - 4th Ave. Ironwood
Ironwood, Michigan 49938
906-932-1337
FAX NO. 906-932-5353
SPACE PLANNING • DESIGN

Bid Set
Eugene School District
Enter address here
River Road / El Camino del Rio Elementary
Food Service Canopy Hood Details

PROJECT #:	1337
ISSUE DATE:	10 February 2016
Drawn:	SH
CHECKED:	LB
REVISIONS:	

FS103C

© 2015 PIVOT ARCHITECTURE

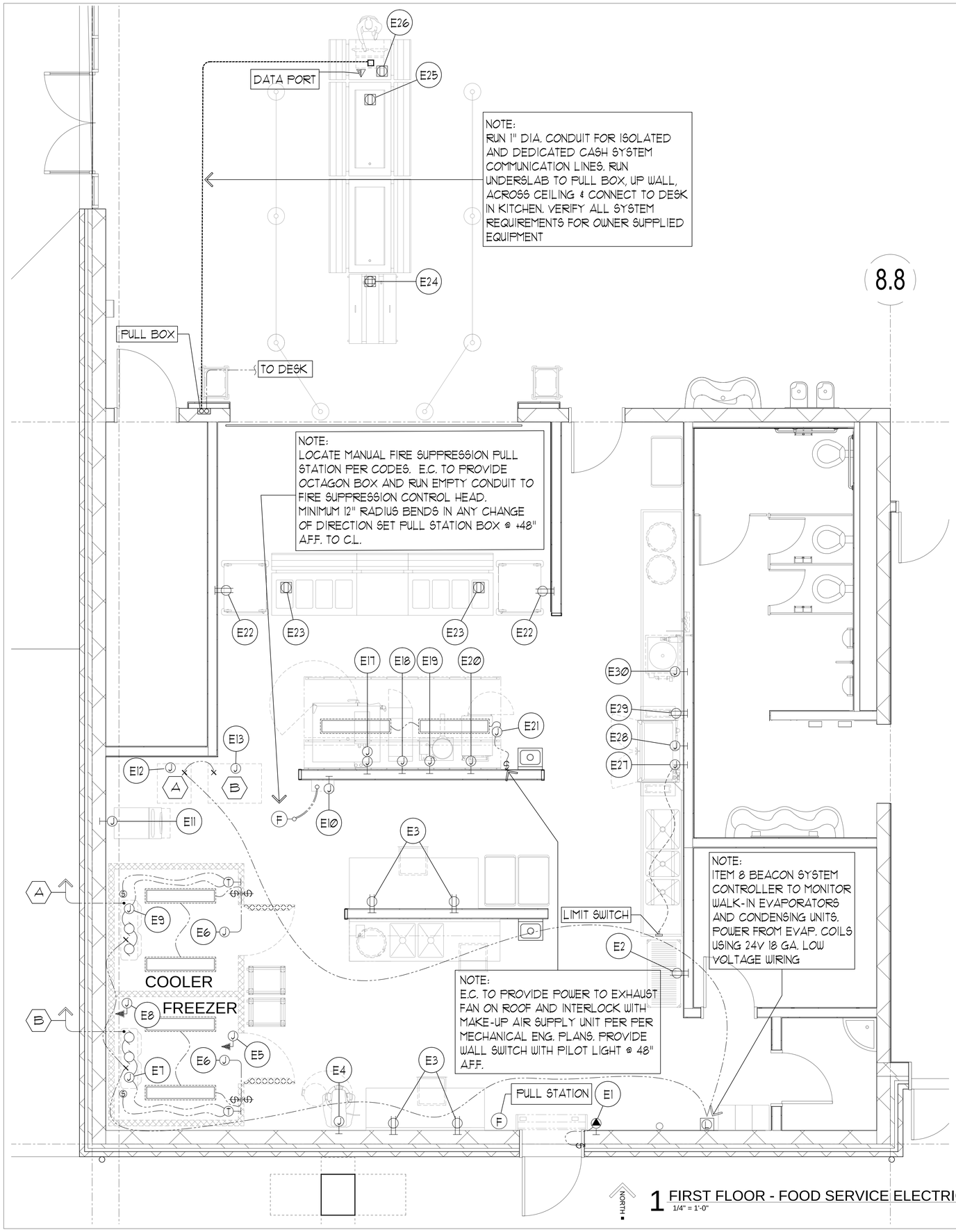

1 FIRST FLOOR - FOOD SERVICE ELECTRICAL/REFRIGERATION PLAN
1/4" = 1'-0"

ELECTRICAL SCHEDULE

ITEM NO.	EQ. NO.	VOLTS	Ø	DESCRIPTION	LOCN.	HEIGHT	SERVICE TO:	RATING	REMARKS
1	E1	208	1	SCO	WALL	105"	AIR CURTAIN	1.7 AMPS	AMPS PER MOTOR. VERIFY NEMA PLUG CONFIGURATION
---	E2	120	1	DCO	WALL	18"	CONVENIENCE	1440 W	DEDICATED CIRCUIT FOR EACH
---	E3	120	1	DCO	WALL	45"	CONVENIENCE	1440 W	DEDICATED CIRCUIT FOR EACH
16	E4	208	3	J-BOX	WALL	44"	30-QUART MIXER	2.8 AMPS	---
7	E5	120	1	J-BOX	CEILING	---	WALK-IN DOOR HEATER	500 W	---
7	E6	120	1	J-BOX	CEILING	---	(2) WALK-IN LIGHTS	160 W	80W EACH
8	E7	208	1	J-BOX	CEILING	---	WALK-IN FREEZER EVAPORATOR	8.8 AMPS	SYSTEM B - BEACON SYSTEM
7	E8	120	1	J-BOX	CEILING	---	WALK-IN DRAIN LINE HEATER	500 W	---
8	E9	120	1	J-BOX	CEILING	---	WALK-IN COOLER EVAPORATOR	2 AMPS	SYSTEM A - BEACON SYSTEM
28	E10	120	1	J-BOX	WALL	102"	FIRE PROTECTION SYSTEM	1 KW	---
19	E11	120	1	J-BOX	WALL	58"	CUBE ICE MACHINE	11.5 AMPS	---
8	E12	208	1	J-BOX	WALL	VERIFY	W.I. COOLER CONDENSING UNIT	3/4 HP	15 AMPS. SYSTEM A - BEACON SYSTEM
8	E13	208	3	J-BOX	WALL	VERIFY	W.I. FREEZER CONDENSING UNIT	2 HP	15 AMPS. SYSTEM B - BEACON SYSTEM
---	E14	---	--	NOT USED	---	---	---	---	---
---	E15	---	--	NOT USED	---	---	---	---	---
---	E16	---	--	NOT USED	---	---	---	---	---
33	E17	480	3	J-BOXES (STACKED)	WALL	7" 42"	DBL. STACK COMBI-OVEN STEAMERS	26.3 AMPS	EACH CONNECTION
32	E18	480	1	J-BOX	WALL	18"	BOIL TOP RANGE	13 AMPS	FURNISHED WITH NEMA 5-15P
30	E19	208	3	J-BOX	WALL	21"	20-GALLON TILTING KETTLE	18 AMPS	---
31	E20	480	3	DCO	WALL	44"	CONVECTION STEAMER	11 AMPS	VERIFY NEMA PLUG CONFIGURATION
28	E21	120	1	J-BOX	CEILING	---	(2) CANOPY HOOD LIGHTS	160 W	80W EACH.
18	E22	120	1	DCO	WALL	18"	MOBILE HEATED/PROOFING CABINET	12 AMPS	FURNISHED WITH NEMA 5-15P
34	E23	208	1	SCO (FLOOR BOX)	FLOOR	0"	HOT FOOD SERVING STATION	32.75 W	TOTAL CONN. TO INCLUDE POWER FOR HEAT LAMPS/DISP. LIGHTS
38, 39	E24	120	1	FOUR-PLEX	FLOOR	0"	DOUBLE-SIDED MILK COOLER AND	14.3 AMPS	TOTAL CONN. REFRIGERATED SALAD BAR. FURN. W/NEMA 5-15P
40	E25	120	1	DCO (FLOOR BOX)	FLOOR	0"	MOBILE DBL.-SIDED FRUIT/VEGIE BAR	7.5 AMPS	FURNISHED WITH NEMA 5-15P
42	E26	120	1	DCO (FLOOR BOX)	FLOOR	0"	POINT OF SALE SYSTEM	1 KW	ISOLATED & DEDICATED
48	E27	208	3	J-BOX	WALL	13"	WASTE COLLECTOR	3.2 AMPS	---
46	E28	480	3	J-BOX	WALL	64"	WAREWASHER (TANK, HEAT/MOTORS)	2-1/6 HP	& 15 KW. INTERCONNECT WITH TABLE LIMIT SWITCH
46	E29	480	3	J-BOX	WALL	64"	WAREWASHER BOOSTER HEATER	30 KW	---
46	E30	120	1	DCO	WALL	64"	WAREWASHER DETERGENT FEED	1440 W	---

ELECTRICAL NOTES

1. THIS DRAWING IS NOT TO BE USED FOR ESTABLISHING ROUGH-IN LOCATIONS. REFER TO DIMENSIONED DRAWINGS PREPARED BY THE KITCHEN EQUIPMENT CONTRACTOR.
2. UNDER ELECTRICAL WORK OF DIVISION 26, PROVIDE ALL ROUGH-INS AND FINAL CONNECTIONS IN CONFORMANCE WITH LOCAL CODES.
3. HOOD LIGHTS ARE FURNISHED UNDER KITCHEN EQUIPMENT, DIVISION 11. UNDER ELECTRICAL WORK OF DIVISION 26, FURNISH AND INSTALL SWITCHES AND FURNISH AND INSTALL ALL INTERCONNECTING CONDUIT AND WIRING CONCEALED FROM SIGHT.
4. UNDER ELECTRICAL WORK OF DIVISION 26, FURNISH AND INSTALL ALL INTERCONNECTING WIRING ACROSS CEILING AS REQUIRED BETWEEN HOODS AND HOOD FIRE CONTROL PANEL.
5. WALK-IN COLD STORAGE ROOMS, LIGHTS, AND CEILING MOUNT EVAPORATORS ARE FURNISHED AND INSTALLED UNDER KITCHEN EQUIPMENT, DIVISION 11. UNDER ELECTRICAL WORK OF DIVISION 26, FURNISH AND INSTALL ALL INTERCONNECTING CONDUIT AND WIRING ABOVE CEILING CONCEALED FROM SIGHT.
6. ALL ELECTRICAL RECEPTACLES SHALL BE MOUNTED HORIZONTALLY ON FIXTURES AND WALLS.
7. ALL EVAPORATOR MOTOR CONNECTIONS SHALL BE MADE WITH CONDUIT TO A J-BOX. PLUG-IN TYPE CONNECTIONS WILL NOT BE ACCEPTED.
8. COLD STORAGE ROOM EVAPORATOR DRAIN LINES (INCLUDING HEAT TAPE FOR FREEZER DRAIN) ARE FURNISHED AND INSTALLED UNDER KITCHEN EQUIPMENT, DIVISION 11. TRAP AT OUTLET END.
9. REFRIGERATION, HIGH PRESSURE WASH SYSTEM, AND BEVERAGE LINES SHOWN ARE SCHEMATIC ONLY AND SHALL BE ADJUSTED TO FIT BUILDING CONDITIONS.
10. UNDER ELECTRICAL WORK OF DIVISION 26, PROVIDE ALL DISCONNECTS, INTERLOCKS, AND CONTACTORS REQUIRED BY LOCAL CODES.
11. UNDER ELECTRICAL WORK OF DIVISION 26, FURNISH AND INSTALL SHUNT TRIP CIRCUIT BREAKERS TO SHUT OFF POWER SUPPLY TO ALL ELECTRICAL COOKING EQUIPMENT DURING FIRE SYSTEM ACTIVATION.
12. UNDER WORK OF KITCHEN EQUIPMENT, DIVISION 11, FURNISH AND INSTALL STAINLESS STEEL OR CHROME PLATED ESCUTCHEON PLATES FOR ALL ELECTRICAL CONNECTIONS PENETRATING COUNTER TOPS FOR BELOW COUNTER PLUG-INS.
13. UNDER ELECTRICAL WORK OF DIVISION 26, FURNISH AND INSTALL ALL INTERCONNECTING WIRING AS REQUIRED BETWEEN BOOSTER HEATER AND DISHWASHER.
14. UNDER ELECTRICAL WORK OF DIVISION 26, FURNISH AND INSTALL ALL INTERCONNECTING WIRING BETWEEN WAREWASHER CONTROL PANEL AND EXHAUST FAN FOR AUTO FAN ON/OFF DURING EQUIPMENT OPERATION.

ELECTRICAL SYMBOL LEGEND

- DCO (DUPLEX CONVENIENCE OUTLET)
- J-BOX (JUNCTION BOX)
- THERMOSTAT
- SOLENOID
- MOTOR
- SWITCH(S)
- LIGHT
- FLOOR STUB (AS NOTED)

SYMBOLS

- 12" X 12" PULL BOX AT HEIGHT NOTED ON PLAN. MEASURED FROM FINISHED FLOOR NOT RAISED BASES. TO ℄ OF PB. AND FLUSH WITH F.IN. WALL: USE 2" Ø CONDUIT, DOWN, WITHIN WALL FROM ABOVE CEILING ALL THE ABOVE FURNISHED AND INSTALLED BY ELECTRICAL CONTRACTOR.
- REFRIGERATION LINE CONNECTION AT EVAPORATOR BY KITCHEN EQUIPMENT CONTRACTOR
- REFRIGERATION SYSTEM BY KITCHEN EQUIPMENT CONTRACTOR.
- INSULATED REFRIGERATION LINES. RUN FROM CONDENSING UNITS AND ABOVE FINISHED CEILING BY KITCHEN EQUIPMENT CONTRACTOR
- CONDUIT UNDER FLOOR SIZE AS NOTED ON PLAN FROM PB IN WALL. CONDUIT SHALL HAVE 24" MINIMUM RADIUS BENDS. FURNISHED AND INSTALLED BY ELECTRICAL CONTRACTOR.

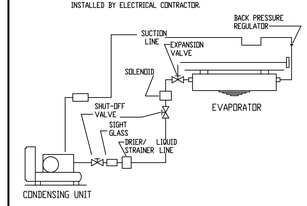

REMOTE, NORMAL TEMP. REF'R. SCHEMATIC
NOT SCALE

INCLUDE CRANKCASE HEATERS FOR ALL SYSTEMS EXPOSED TO FREEZING WEATHER.	ADD OIL SEPARATORS TO LOW TEMPERATURE SYSTEMS	ALL SYSTEMS DESIGNED FOR +90 AMBIENT

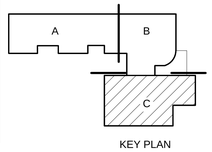

KEY PLAN

PIVOT ARCHITECTURE

HALLIDAY P.O. BOX 1000 ENGINEERING 555 - 24TH STREET EUGENE, OR 97405 PH: 541-343-3234 FAX: 541-343-3235 SPACE PLANNING & DESIGN

Bid Set

Eugene School District
Enter address here

River Road / El Camino del Rio Elementary

Food Service Electrical/Refrig. Plan

PROJECT #:	1337
ISSUE DATE:	10 February 2016
DRAWN:	SH
CHECKED:	LB

REVISIONS:

FS104

© 2015 PIVOT ARCHITECTURE

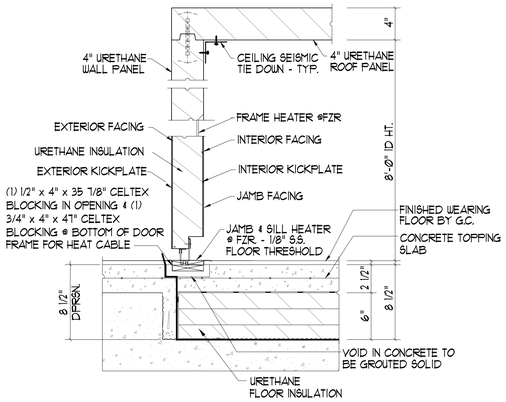

A DOOR/FLOOR SECTION
NO SCALE

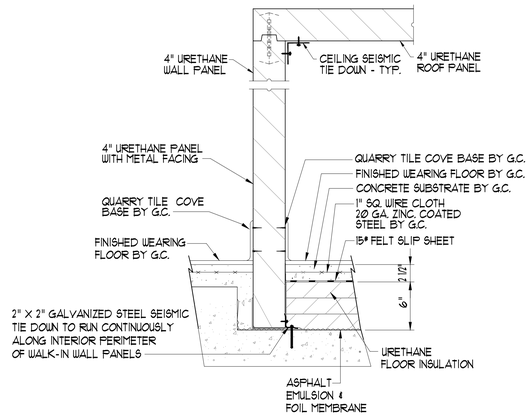

B WALL/FLOOR SECTION
NO SCALE

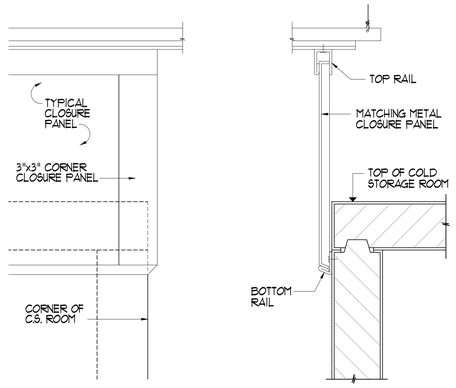

FRONT ELEVATION

SECTION

C CLOSURE PANEL DETAILS
NO SCALE

* NOTE: VERIFY ALL DETAILS AND FINISHED FLOOR MATERIAL AT INTERIOR AND EXTERIOR OF EXISTING WALK-IN COLD STORAGE ROOMS

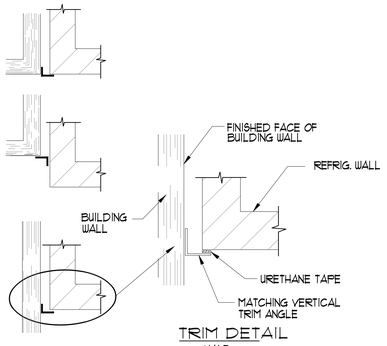

TRIM DETAIL
HALF

D VERITCAL TRIM MOULDING DETAIL
NO SCALE

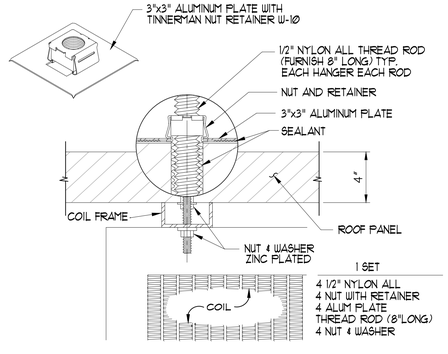

RODS WASHER NUTS & ALUMINUM PLATES WITH NUT RETAINER SHALL BE SIGNED OVER TO JOB SUPERINTENDENT. ACTUAL INSTALLATION OF PARTS SHALL BE RESPONSIBILITY OF THE MECHANICAL REFRIGERATION CONTRACTOR.

E NYLON ROD COIL HANGER DETAIL
NO SCALE

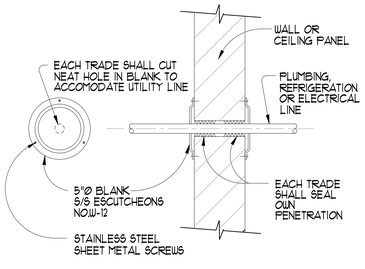

F TYPICAL ESCUTCHEON DETAIL
NO SCALE

1 FIRST FLOOR - FOOD SERVICE WALK-IN DETAILS
NO SCALE

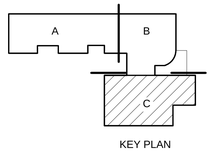

KEY PLAN

PIVOT ARCHITECTURE

HALLIDAY ENGINEERING

Bid Set

Eugene School District
Enter address here

River Road / El Camino del Rio Elementary

Food Service Walk-In Details

PROJECT #:	1337
ISSUE DATE:	10 February 2015
DRAWN:	SH
CHECKED:	LB

REVISIONS:

FS201

- 2015 PIVOT ARCHITECTURE

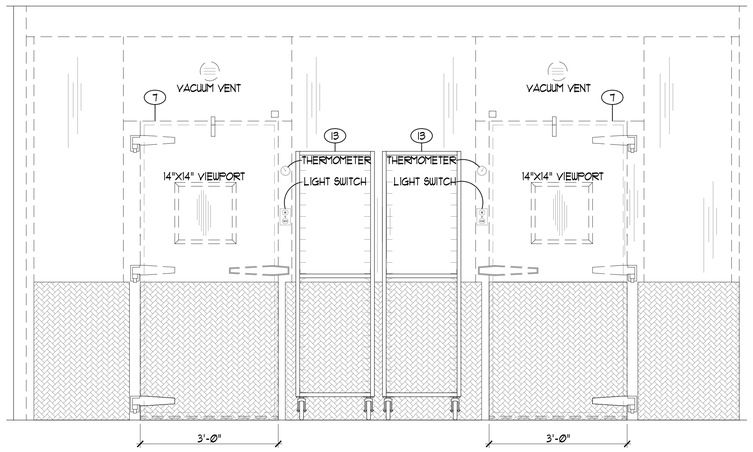

A ELEVATION W. I. COOLER/FREEZER BANK - (EXTERIOR)
3/4"=1'-0"

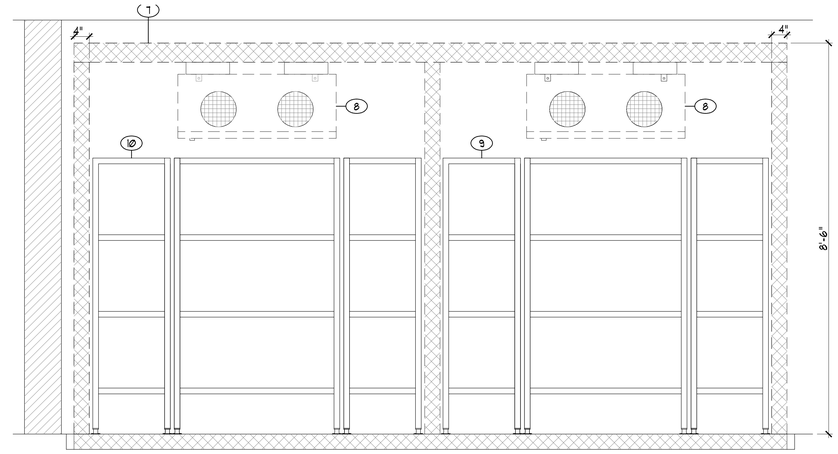

B ELEVATION W. I. COOLER/FREEZER BANK - (INTERIOR)
3/4"=1'-0"

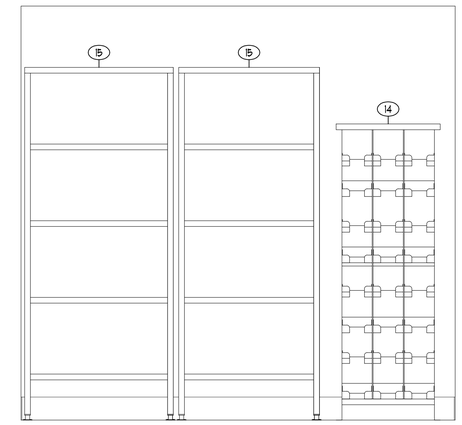

C ELEVATION DRY STORAGE ROOM
3/4"=1'-0"

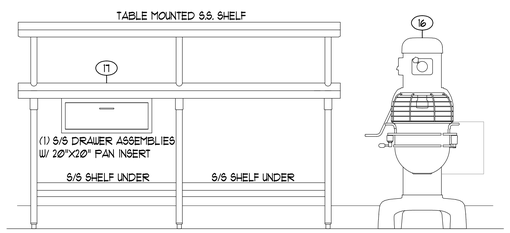

D ELEVATION SUPPORT WORK TABLE & MIXER
3/4"=1'-0"

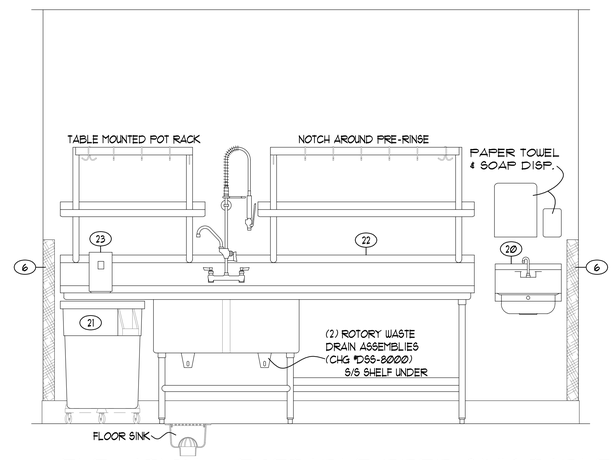

E ELEVATION VEGETABLE PREP SINK TABLE
3/4"=1'-0"

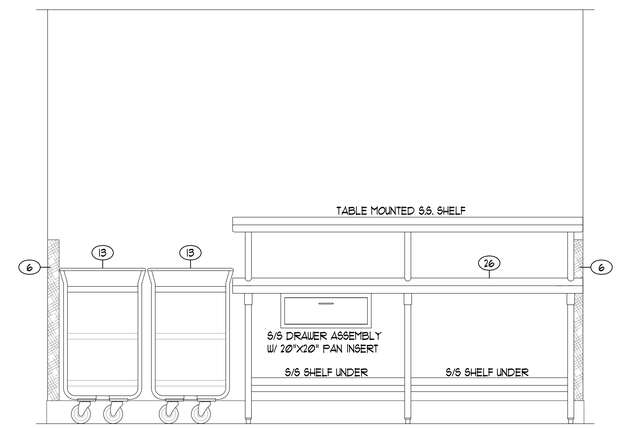

F ELEVATION WORK TABLE & UTILITY CARTS
3/4"=1'-0"

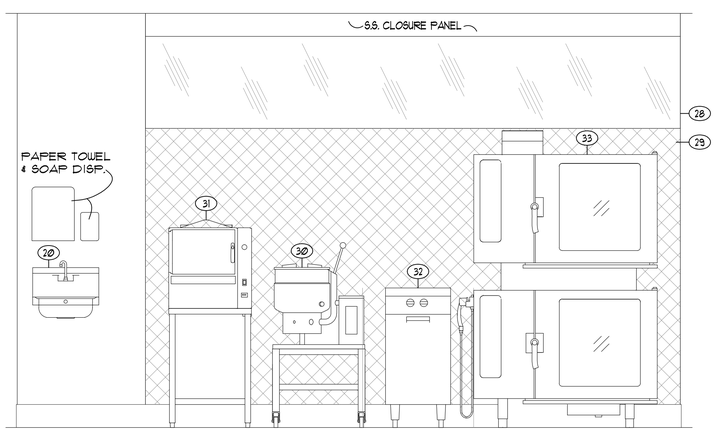

G ELEVATION COOKING LINE
3/4"=1'-0"

NOTE: SEE SHEET FS101 FOR LOCATIONS AND QUANTITIES OF THESE ITEMS

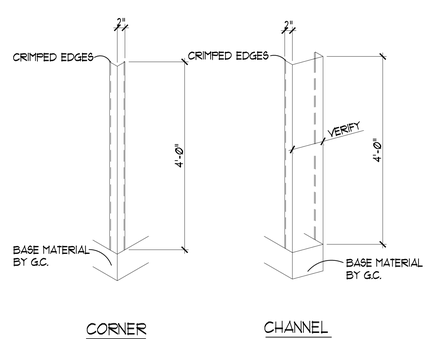

6 DETAILS CORNER & CHANNEL GUARDS
3/4"=1'-0"

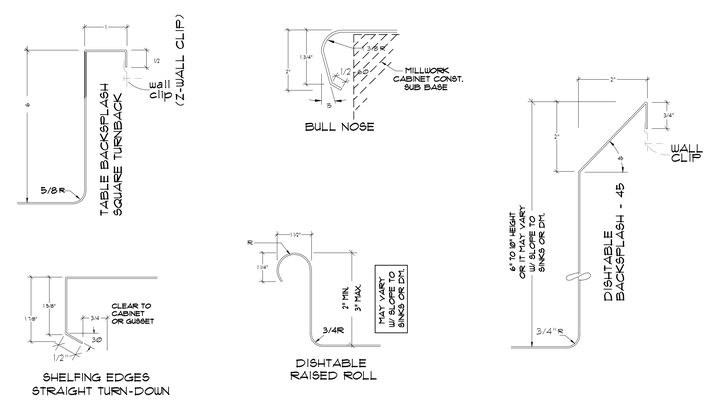

H TABLE EDGES / BACKSPLASH / SECTION EDGE DETAILS
3/4"=1'-0"

1 FIRST FLOOR - FOOD SERVICE ELEVATION & FABRICATION DETAILS
SCALE: AS NOTED

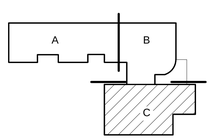

KEY PLAN

PIVOT ARCHITECTURE

HALLIDAY PROJECT MANAGEMENT
6165 - 40th AVENUE, HYATTSVILLE
PHONE: 301-779-4000
FAX NO. 301-779-4001
E-MAIL: SASS
SPACE PLANNING & DESIGN

Bid Set
Eugene School District
Enter address here
River Road / El Camino del Rio Elementary

Food Service Equipment Plan

PROJECT #	1337
ISSUE DATE	10 February 2016
DRAWN	SH
CHECKED	LB

REVISIONS:

FS202

© 2015 PIVOT ARCHITECTURE

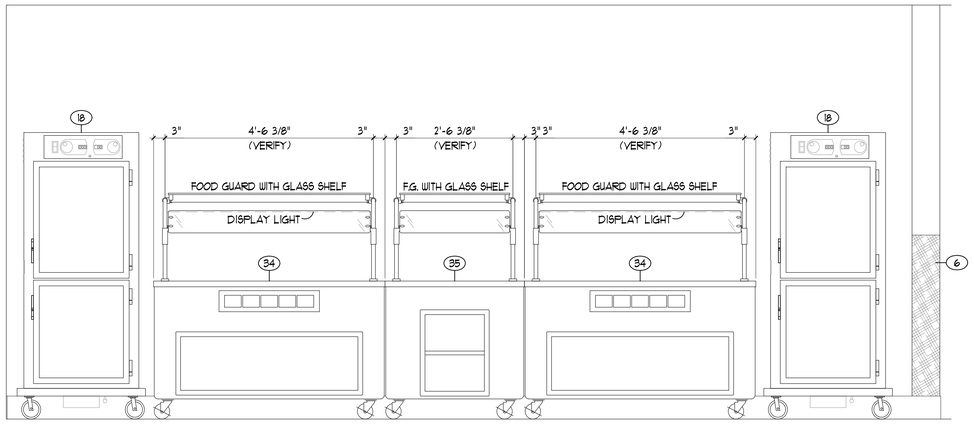

I ELEVATION HOT FOOD STATIONS W/FOOD GUARDS & HOT CABINETS
3/4"=1'-0"
SERVICE SIDE

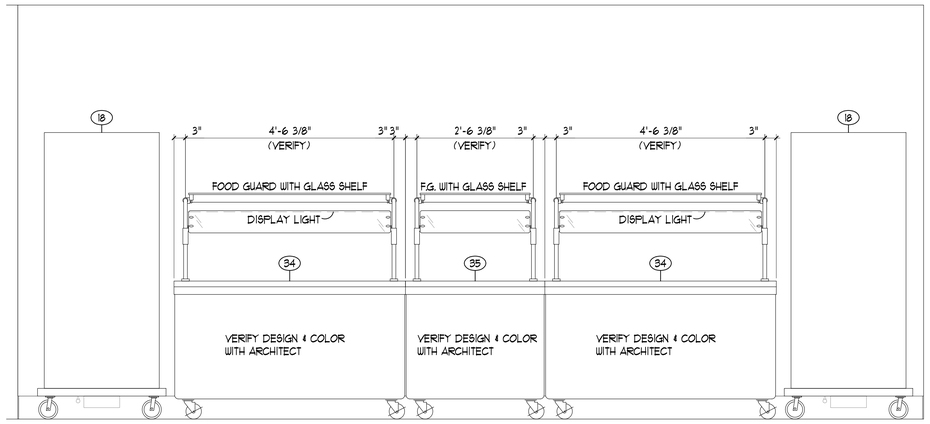

J ELEVATION HOT FOOD STATIONS W/FOOD GUARDS & HOT CABINETS
3/4"=1'-0"
CUSTOMER SIDE

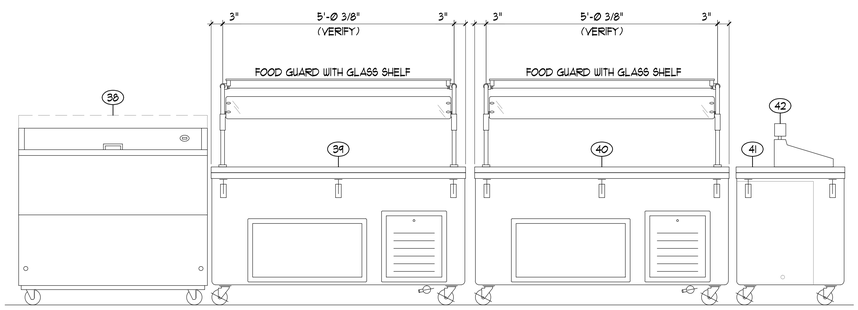

K ELEVATION MOBILE DOUBLE-SIDED MILK, REF. SALAD BAR, & VEGI BAR
3/4"=1'-0"

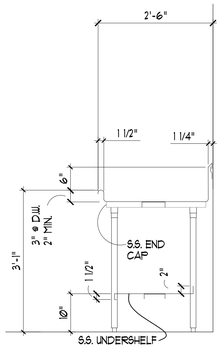

1/44 SECTION
3/4"=1'-0"

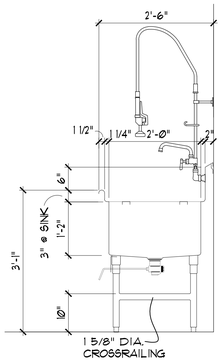

2/44 SECTION
3/4"=1'-0"

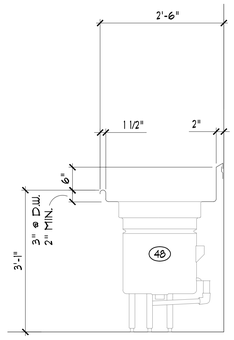

1/49 SECTION
3/4"=1'-0"

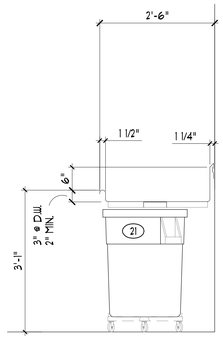

2/49 SECTION
3/4"=1'-0"

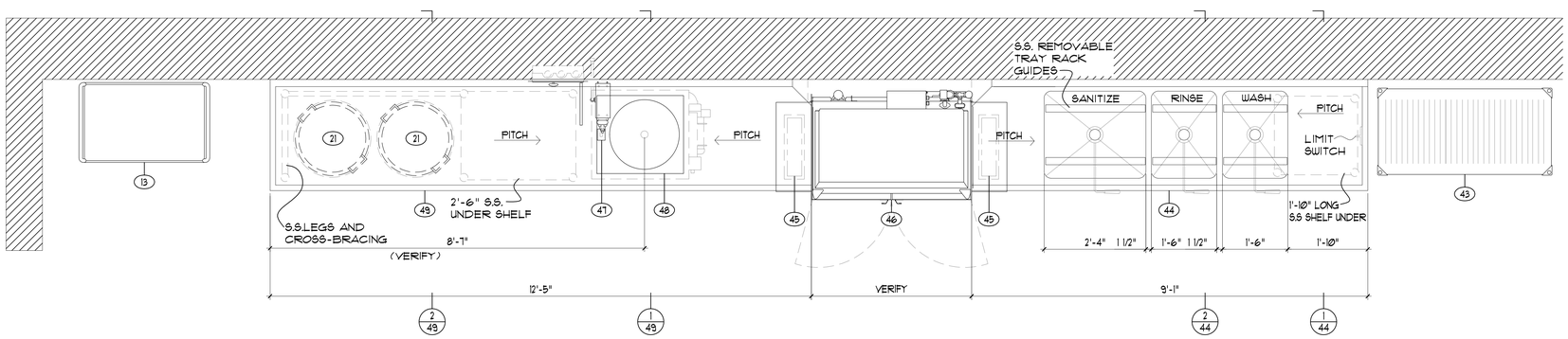

44 46 49 PLAN VIEW WAREWASHING AREA
3/4"=1'-0"

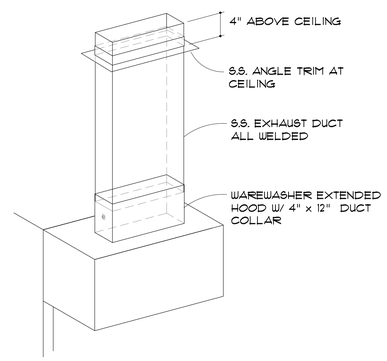

45 ISOMETRIC VAPOR EXHAUST DUCTS

1 FIRST FLOOR - FOOD SERVICE ELEVATION & FABRICATION DETAILS
SCALE: AS NOTED

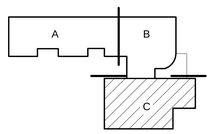

KEY PLAN

PIVOT ARCHITECTURE

HALLIDAY
PROJECT GROUP
555 - 4th Ave. Northwest
Salem, Oregon 97304
PH NO. 503-364-5253
FAX NO. 503-364-5263
SPACE PLANNING & DESIGN

Bid Set
Eugene School District
Enter address here
River Road / El Camino del Rio Elementary

Food Service Equipment Plan

PROJECT #:	1337
ISSUE DATE:	10 February 2015
DRAWN:	SH
CHECKED:	LB

REVISIONS:

FS203

© 2015 PIVOT ARCHITECTURE

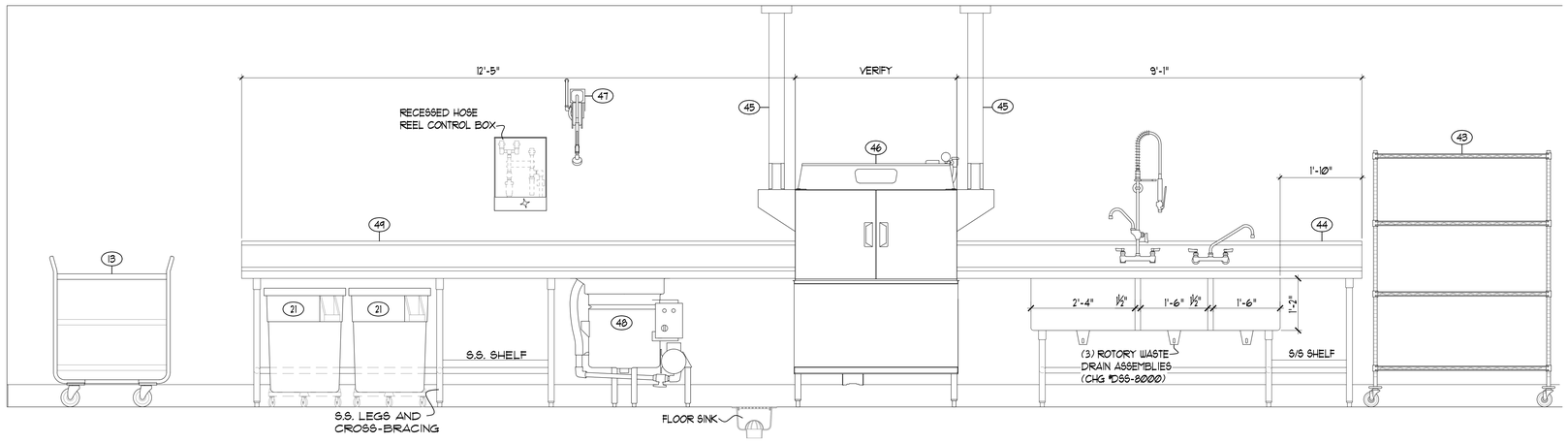

L ELEVATION SOILED/CLEAN DISHTABLES & WAREWASHER
3/4"=1'-Ø"

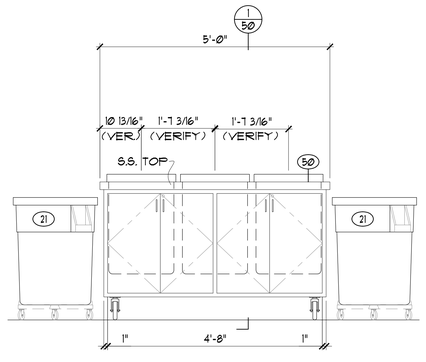

M ELEVATION MOBILE TRAY/TRASH/RECYCLING COUNTER
3/4"=1'-Ø"

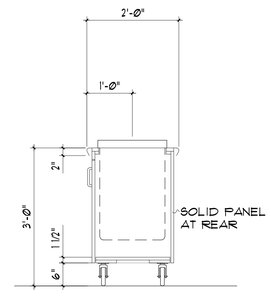

1/50 SECTION
3/4"=1'-Ø"

1 FIRST FLOOR - FOOD SERVICE ELEVATION & FABRICATION DETAILS
SCALE: AS NOTED

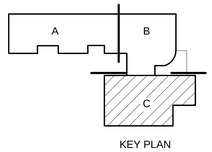

KEY PLAN

PIVOT ARCHITECTURE

HALLIDAY
ENGINEERING
555 - 4th Avenue Northwest
Salem, Oregon 97304
PH NO. 503-364-5243
FAX NO. 503-364-5253
SPACE PLANNING & DESIGN

Bid Set

Eugene School District
Enter address here

River Road / El Camino del Rio Elementary

Food Service Equipment Plan

PROJECT #	1337
ISSUE DATE:	10 February 2015
DRAWN:	SH
CHECKED:	LB

REVISIONS:

FS204

© 2014 PIVOT ARCHITECTURE

BACKBOX SCHEDULE

SYMBOL	FUNCTION (PANEL NAME)	BOX SIZE	MOUNTING LOCATION
AVJB	AUDIOVISUAL MEDIA JUNCTION BOX	SIZE PER NEC (APPROX 8X8X4)	BEHIND EQUIP. RACK
EQUIP RACK	AUDIO–VISUAL EQUIPMENT RACK	PROVIDED BY AV CONTRACTOR	AS SHOWN
FB1	FLOOR BOX	FSR FL–500P +FL–FRK–500P	FLUSH IN FLOOR AS DIRECTED ON PLANS
ANT	REMOTE ANTENNA	1–GANG	MOUNT AT CEILING
WP1	WALL PANEL	FSR FL 600P	MOUNT 18" AFF AT LOCATION SHOWN
WP2	WALL PANEL	FSR WB–RXG 4–GANG WITH COVER	MOUNT 18" AFF AT LOCATION SHOWN
S1	SPEAKER CLUSTER	4–GANG DEEP BOX	MOUNT AT 18' AFF
S2	SPEAKER TYPE 2	2–GANG DEEP BOX	MOUNT AT 96" AFF
SC	ELECTRIC SCREEN CONTROL	2–GANG DEEP BOX	AT SCREEN AND AT 48" AFF FOR SWITCH
S	CEILING SPEAKER	1–GANG	FLUSH IN CEILING
CP1	CEILING PROJECTOR PANEL	FSR CB–22	FLUSH IN ACT CEILING
MIX	AUDIO MIX LOCATION	FSR FL 700 WITH COVER	MOUNT 18" AFF
RC	REMOTE CONTROL	FSR WB 3G WITH COVER	MOUNT 48" AFF

GENERAL NOTES:

1. MOUNTING LOCATIONS ARE NOTED TO THE BOTTOM OF THE BACK BOX OR ARE NOTED ON DRAWINGS. ALL BOXES ARE RECESSED FOR FLUSH MOUNTING (TO FINISHED WALL/CEILING +0"/–1/8") UNLESS OTHERWISE NOTED.

2. COORDINATE ALL EQUIPMENT AND BACK BOX LOCATIONS WITH ELECTRICAL AND ARCHITECTURAL

3. POWER NEXT TO FLOOR BOXES SHOULD BE LOCATED IN THE FLOOR BOX

GENERAL INSTALLATION NOTES

THE CATEGORY AV DRAWINGS INDICATE INFRASTRUCTURE ONLY INCLUDING CONDUIT, PULL–BOXES, BACK BOXES COLLECTOR BOXES, AND/OR TERMINAL CABINETS. AV EQUIPMENT AND SIGNAL CABLE IS IN A SEPARATE AV CONTRACT.

AC POWER FOR THE A/V SYSTEMS TO BE PROVIDED BY ELECTRICAL CONTRACTOR PER DIVISION 26 IN ACCORDANCE WITH PROJECT DRAWINGS AND SPECIFICATIONS.

I. AV CONDUIT SYSTEM:

A. ALL CONDUIT, WIREWAYS, PULL BOXES, BACK BOXES, COLLECTOR BOXES, AND ANCILLARY FITTINGS, CONNECTORS, AND MOUNTING ACCESSORIES ASSOCIATED WITH THE AV INFRASTRUCTURE TO BE INSTALLED PER DIVISION 26.

B. USE ALL FERROUS METAL CONDUIT. NO PVC UNLESS NOTED.

C. IN EACH CONDUIT RUN BETWEEN SUCCESSIVE BACK BOXES AND PULL BOXES, INSTALL A LENGTH OF YELLOW PULL LINE. PULL LINE SHALL HAVE SEQUENTIAL NUMBERING AT EACH ONE FOOT MARK.

D. REFER TO A/V SPECIFICATION FOR WIRE TYPES. REFER TO THE SINGLE LINE DRAWINGS FOR QUANTITIES.

E. PULL BOXES ARE NOT SHOWN ON THE RISERS, BUT MUST BE INSTALLED AFTER EACH 270 DEGREES OF BEND. EVERY 50 FEET OF STRAIGHT CONDUIT LENGTH SHALL BE CONSIDERED EQUIVALENT TO 90 DEGREES OF CONDUIT BEND.

F. TERMINATE ALL CONDUITS IN BACK BOXES, COLLECTOR BOXES, OR WIREWAYS AS SHOWN ON DRAWINGS. THE ELECTRICAL CONTRACTOR SHALL PROVIDE PLASTIC OR RUBBER BUSHINGS AS EDGE PROTECTION WHEN CONDUITS TERMINATE AT WIREWAYS AS SHOWN. EXPOSED CONDUIT EDGES ARE UNACCEPTABLE.

G. THE ELECTRICAL CONTRACTOR SHALL INCREASE THE SIZE OF BOX KNOCKOUTS AS REQUIRED AND PROVIDE APPROPRIATE FITTINGS, CONNECTORS, AND MOUNTING ACCESSORIES FOR A COMPLETE INSTALLATION IN COMPLIANCE WITH DIVISION 26.

H. RACKS TO BE PROVIDED BY ELECTRICAL CONTRACTOR PER DIVISION 16 IF INDICATED ON DRAWINGS. TAKE CARE TO ISOLATE ALL CONDUITS FROM THE TECHNICAL GROUND SYSTEM. BE SURE ALL CONDUITS ENTERING THE RACKS ARE INSULATED FROM THE RACKS.

I. ELECTRICAL CONTRACTOR SHALL DEMONSTRATE CONTINUITY OF ALL CONDUITS BY PASSING A MOUSE OR PLUG OF APPROPRIATE SIZE THROUGH EACH CONDUIT RUN.

J. ELECTRICAL CONTRACTOR SHALL MAKE AVAILABLE A FIELD REPRESENTATIVE FOR THE INSTALLER OF THE A/V EQUIPMENT DURING THE A/V INSTALLATION.

K. LEAVE NO CONDUIT ENTERING RACKS FROM TOP AND/OR SIDES EXPOSED TO FRONT VIEW OF RACKS. PLACE TRIM OR PANELS TO HIDE CONDUIT RUNS FOR A NEAT APPEARANCE.

L. WHERE CONDUIT IS TO BE SURFACE RUN, THE CONTRACTOR SHALL FINISH THE CONDUIT TO MATCH THE WALL FINISH.

M. ALL NEMA STYLE BACKBOXES ARE TYPE I, INDOOR, SCREW COVER ENCLOSURES UNLESS OTHERWISE INDICATED ON THE DRAWINGS.

II. BACK BOX LOCATIONS AND MOUNTING:

A. REFER TO ARCHITECTURAL ELEVATIONS FOR EXACT MOUNTING LOCATIONS OF ALL BACK BOXES.

B. BASED ON THE DRAWING LOCATIONS PER A, CONTRACTOR SHALL VERIFY LOCATION OF ALL BACK BOXES WITH OWNER'S REPRESENTATIVE IN THE FIELD.

C. ALL BOXES SHALL HAVE A BLANK COVER PLATE WITH THE STENCILED AV BACK BOX LABEL PAINTED ON THE INSIDE OF THE COVER PLATE FOR IDENTIFICATION.

D. COORDINATE ALL FINISHES WITH ARCHITECT. SUBMIT SAMPLE OF FINISHED PANEL TO ARCHITECT FOR REVIEW AND APPROVAL.

WIRE LEGEND

TYPE	QTY	DESCRIPTION	MANUFACTURER	PART NUMBER	CONDUCTORS
AD	X	AUDIO (DIGITAL)	BELDEN	1800B	1 PR W/SHLD
AL	X	AUDIO (LINE)	BELDEN	9451	1 PR W/SHLD
AM	X	AUDIO (MICROPHONE)	BELDEN	9451	1 PR W/SHLD
AP	X	MULTIPAIR AUDIO	BELDEN	1817R	8 PR W/SHLD
CS	X	CONTROL (SERIAL)	BELDEN	9451	1 PR W/SHLD
CR	X	CONTROL (IR)	BELDEN	9451	1 PR W/SHLD
CG	X	CONTROL (GENERAL)	BELDEN	9455	9 COND 20 GA
D	X	DATA	BELDEN	1700A	4 PR CAT 5
IM	X	PRODUCTION INTERCOM	WEST PENN	D–510	2 PR W/SHLD
P	X	LOW VOLTAGE POWER	BELDEN	8461	18/2
R	X	RGBHV 5 WIRE	BELDEN	7789A	5 WIRE HI RES
SL	X	SPEAKER (8 OHM) LONG	WEST PENN	C–210	10/2
SH	X	SPEAKER (8 OHM) SHORT	WEST PENN	227	12/2
SZ	X	SPEAKER (70 VOLT)	WEST PENN	225	16/2
T	X	TELEPHONE/DATA	BELDEN	1700A	4 PR CAT 5
V	X	COMPOSITE VIDEO	BELDEN	1694A	RG–6/U
Y	X	S–VIDEO (Y/C)	BELDEN	QTY (2) 1505A	(2) RG–59/U

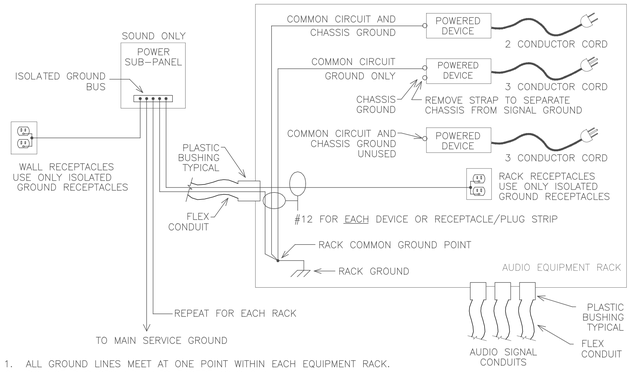

1. ALL GROUND LINES MEET AT ONE POINT WITHIN EACH EQUIPMENT RACK.
2. DO NOT BUS GROUND LINES EXCEPT AS SHOWN.
3. DO NOT CONNECT ELECTRICAL BOX OR CONDUIT TO PIN #1 OR CABLE SHIELD AT RECEPTACLES.
4. ISOLATED GROUND RECEPTACLES TYPICAL FOR ALL POWER RECEPTACLES IN SOUND EQUIPMENT AREAS.
5. ISOLATE ALL CONDUIT FROM EQUIPMENT RACKS USING PLASTIC BUSHINGS OR OTHER MEANS.
6. ISOLATE EACH RACK FROM THE OTHER RACKS, BOLT TOGETHER WITH PLASTIC BOLTS
7. ALL GROUND CONDUCTORS INSULATED COPPER OF GAUGE INDICATED.

1 POWER GROUNDING DETAIL
SCALE: NO SCALE

PIVOT ARCHITECTURE

PRELIMINARY NOT FOR CONSTRUCTION

IBI GROUP

Iowa

LISTEN ACOUSTICS
1001 SW 5TH AVE
SUITE 1100
PORTLAND, OR 97204
503.241.5255

BID SET

EUGENE SCHOOL DISTRICT 4J
120 WEST HILLARD AVENUE, EUGENE, OREGON 97404

RIVER ROAD / EL CAMINO DEL RIO ELEMENTARY SCHOOL

AV GENERAL

PROJECT #: 13370.00
ISSUE DATE: 02.12.2016
REVISIONS:

AV100

PRINTED ON: 6/3/2015 5:17:15 PM FROM FILE: C:\Pivot_Architecture\Revit_2015\1337_RRES_Arch_Bldg_15_bob.rvt

© 2014 PIVOT ARCHITECTURE

BACKBOX SCHEDULE

SYMBOL	FUNCTION (PANEL NAME)	BOX SIZE	MOUNTING LOCATION
AVJB	AUDIOVISUAL MEDIA JUNCTION BOX	SIZE PER NEC (APPROX 8X8X4)	BEHIND EQUIP. RACK
EQUIP RACK	AUDIO-VISUAL EQUIPMENT RACK	PROVIDED BY AV CONTRACTOR	AS SHOWN
FB1	FLOOR BOX	FSR FL-500P +FL-FRK-500P	FLUSH IN FLOOR AS DIRECTED ON PLANS
ANT	REMOTE ANTENNA	1-GANG	MOUNT AT CEILING
WP1	WALL PANEL	FSR FL 600P	MOUNT 18" AFF AT LOCATION SHOWN
WP2	WALL PANEL	FSR WB-RXG 4-GANG WITH COVER	MOUNT 18" AFF AT LOCATION SHOWN
S1	SPEAKER CLUSTER	4-GANG DEEP BOX	MOUNT AT 18" AFF
S2	SPEAKER TYPE 2	2-GANG DEEP BOX	MOUNT AT 96" AFF
SC	ELECTRIC SCREEN CONTROL	2-GANG DEEP BOX	AT SCREEN AND AT 48" AFF FOR SWITCH
S	CEILING SPEAKER	1-GANG	FLUSH IN CEILING
CP1	CEILING PROJECTOR PANEL	FSR CB-22	FLUSH IN ACT CEILING
MIX	AUDIO MIX LOCATION	FSR FL 700 WITH COVER	MOUNT 18" AFF
RC	REMOTE CONTROL	FSR WB 3G WITH COVER	MOUNT 48" AFF

GENERAL NOTES:

1. MOUNTING LOCATIONS ARE NOTED TO THE BOTTOM OF THE BACK BOX OR ARE NOTED ON DRAWINGS. ALL BOXES ARE RECESSED FOR FLUSH MOUNTING (TO FINISHED WALL/CEILING +0"/-1/8") UNLESS OTHERWISE NOTED.
2. COORDINATE ALL EQUIPMENT AND BACK BOX LOCATIONS WITH ELECTRICAL AND ARCHITECTURAL
3. POWER NEXT TO FLOOR BOXES SHOULD BE LOCATED IN THE FLOOR BOX

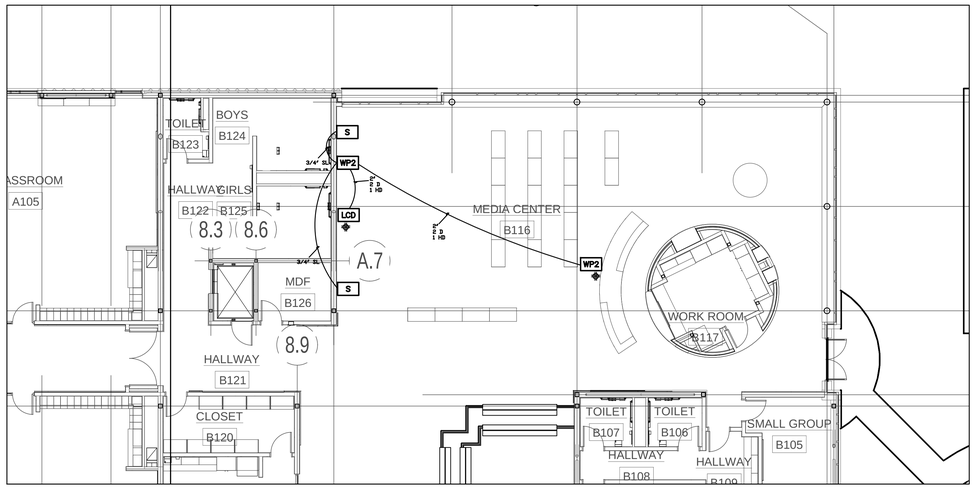

WIRE LEGEND

TYPE	QTY	DESCRIPTION	MANUFACTURER	PART NUMBER	CONDUCTORS
AD	X	AUDIO (DIGITAL)	BELDEN	1800B	1 PR W/SHLD
AL	X	AUDIO (LINE)	BELDEN	9451	1 PR W/SHLD
AM	X	AUDIO (MICROPHONE)	BELDEN	9451	1 PR W/SHLD
AP	X	MULTIPAIR AUDIO	BELDEN	1817R	8 PR W/SHLD
CS	X	CONTROL (SERIAL)	BELDEN	9451	1 PR W/SHLD
CR	X	CONTROL (IR)	BELDEN	9451	1 PR W/SHLD
CG	X	CONTROL (GENERAL)	BELDEN	9455	9 COND 20 GA
D	X	DATA	BELDEN	1700A	4 PR CAT 5
IM	X	PRODUCTION INTERCOM	WEST PENN	D-510	2 PR W/SHLD
P	X	LOW VOLTAGE POWER	BELDEN	8461	18/2
R	X	RGBHV 5 WIRE	BELDEN	7789A	5 WIRE HI RES
SL	X	SPEAKER (8 OHM) LONG	WEST PENN	C-210	10/2
SH	X	SPEAKER (8 OHM) SHORT	WEST PENN	227	12/2
SZ	X	SPEAKER (70 VOLT)	WEST PENN	225	16/2
T	X	TELEPHONE/DATA	BELDEN	1700A	4 PR CAT 5
V	X	COMPOSITE VIDEO	BELDEN	1694A	RG-6/U
Y	X	S-VIDEO (Y/C)	BELDEN	QTY (2) 1505A	(2) RG-59/U

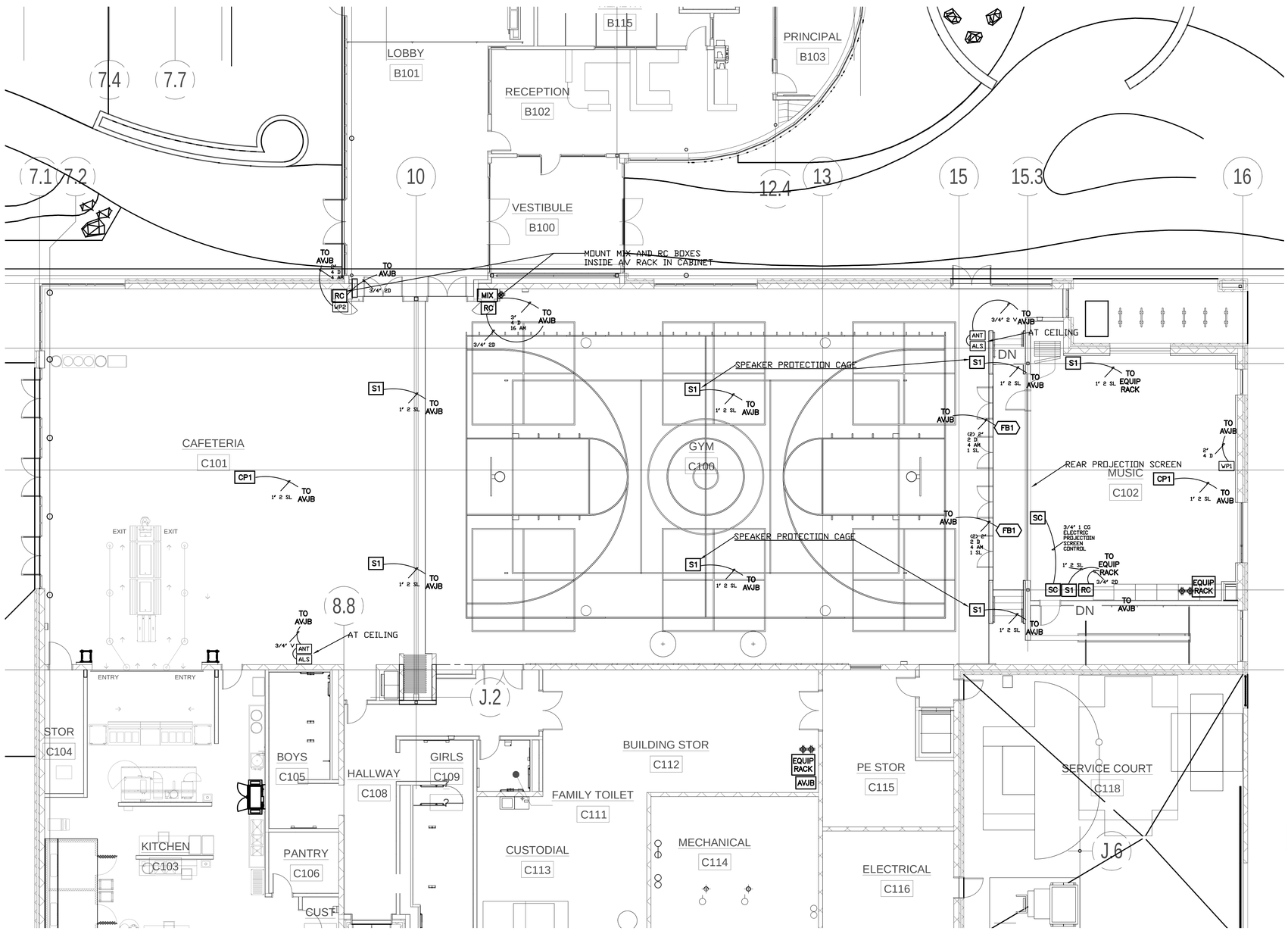

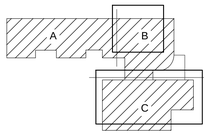

KEY PLAN

PRELIMINARY NOT FOR CONSTRUCTION

PIVOT ARCHITECTURE

IBI GROUP

Iowa

LISTEN ACOUSTICS
1001 SW 5TH AVE
SUITE 1100
PORTLAND, OR 97204
503-241-5255

BID SET

EUGENE SCHOOL DISTRICT 4J
120 WEST HILLIARD AVENUE, EUGENE, OREGON 97404

RIVER ROAD / EL CAMINO DEL RIO ELEMENTARY SCHOOL

AV FIRST FLOOR PLAN

PROJECT #	1337.00	REVISIONS
ISSUE DATE	02.12.2016	

AV101

FROM FILE:

PRINTED ON:

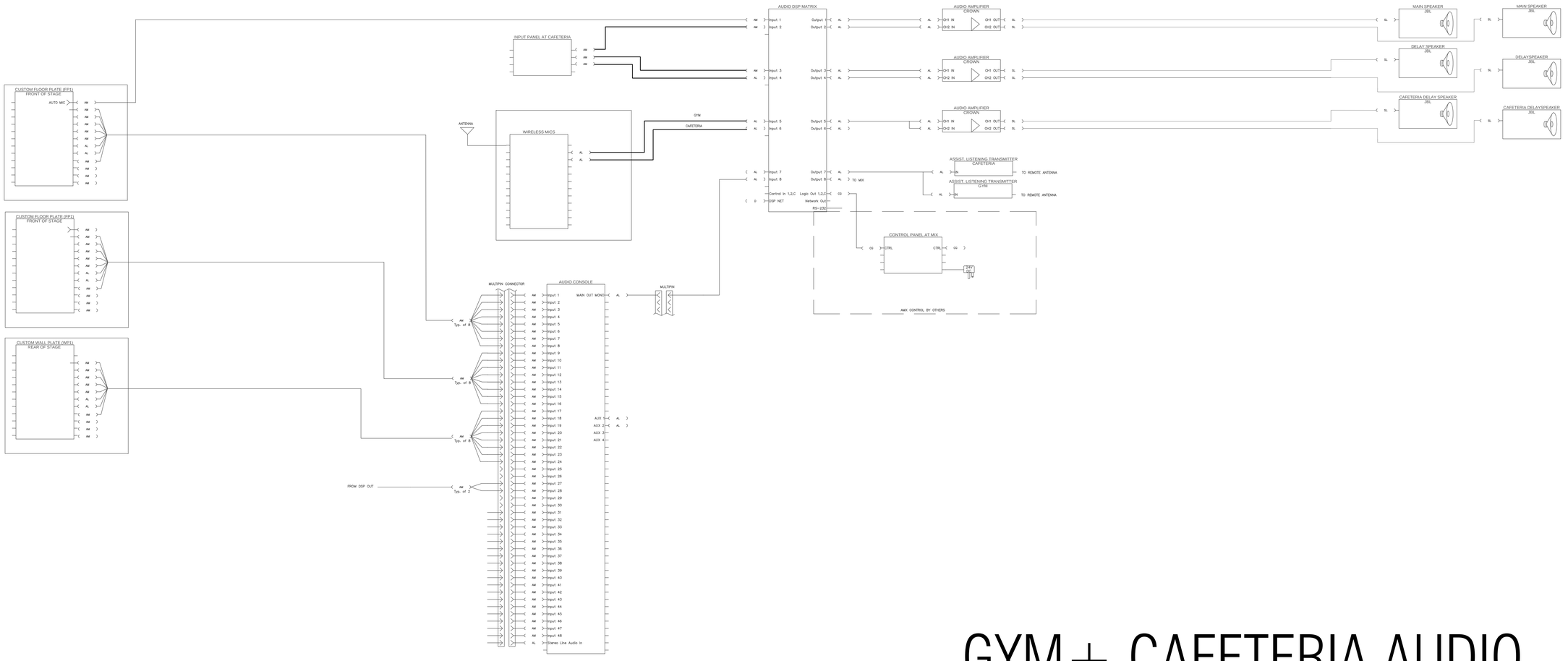

GYM + CAFETERIA AUDIO

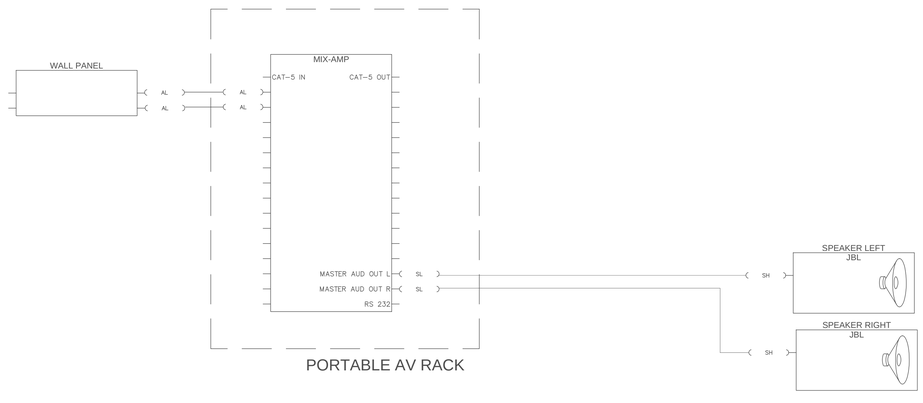

MEDIA AUDIO

PRELIMINARY NOT FOR CONSTRUCTION

PIVOT ARCHITECTURE

IBI GROUP

dowa

LISTEN ACOUSTICS
1800 NW STYRAX
SUITE 1100
PORTLAND, or 97204
503-241-0555

BID SET

EUGENE SCHOOL DISTRICT 4J
120 WEST HILLIARD AVENUE, EUGENE, OREGON 97404

RIVER ROAD / EL CAMINO DEL RIO ELEMENTARY SCHOOL

AV GYM + CAFETERIA + MEDIA AUDIO

PROJECT #:	1337.00
ISSUE DATE:	02.12.2015
REVISIONS:	

AV300

© 2014 PIVOT ARCHITECTURE

FROM FILE:

PRINTED ON: