© 2014 PIVOT ARCHITECTURE

HOWARD ELEMENTARY SCHOOL

EUGENE SCHOOL DISTRICT

700 HOWARD AVE, EUGENE, OREGON 97404

HOWARD RECONCILED SET

VOLUME 02

10/28/2014

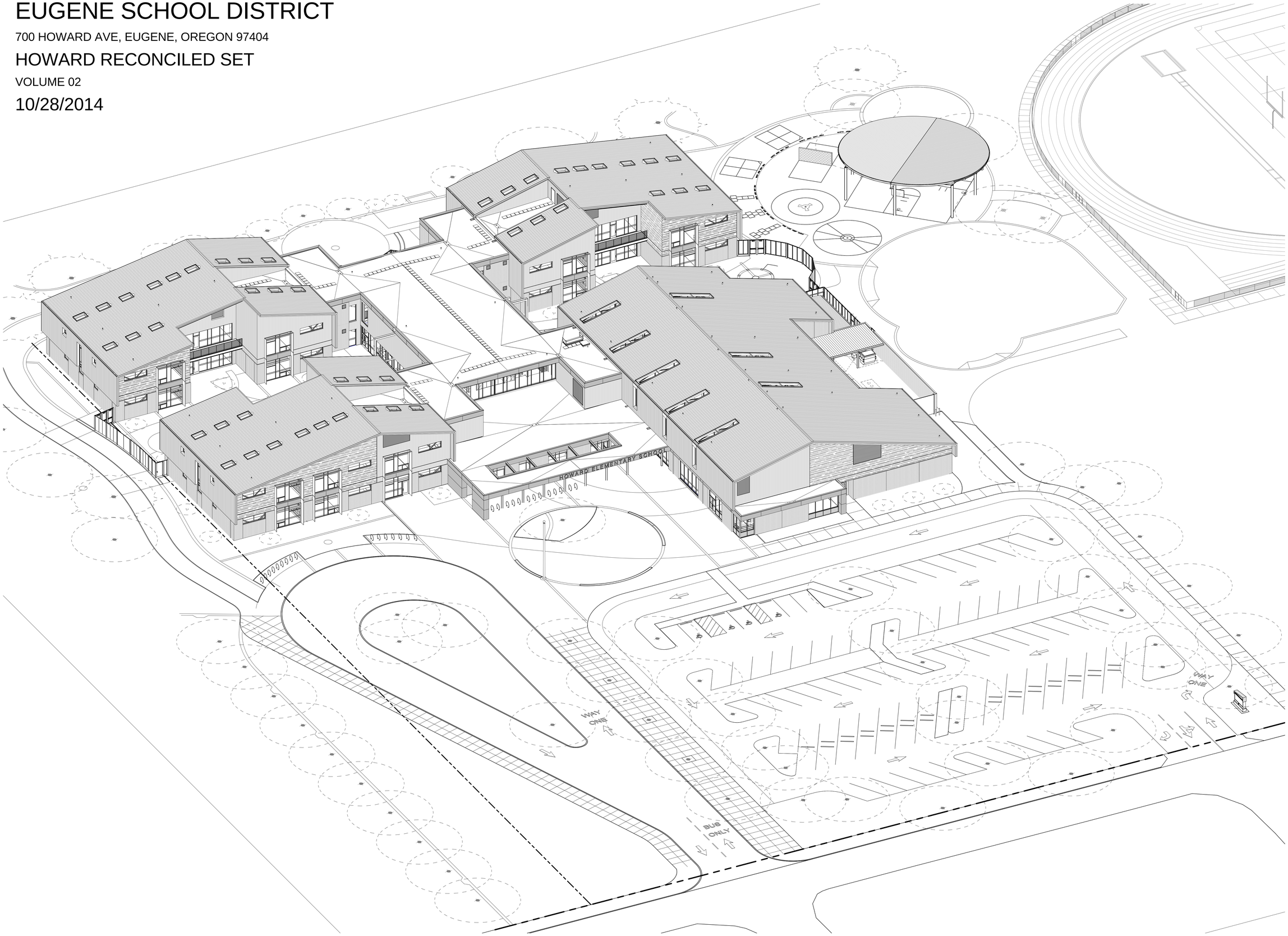

PIVOT ARCHITECTURE

REGISTERED ARCHITECT
CURTIS M. WILSON
EUGENE, OREGON
3543
STATE OF OREGON

IBI GROUP

Nova

HOWARD RECONCILED SET
EUGENE SCHOOL DISTRICT
700 HOWARD AVE, EUGENE, OREGON 97404
HOWARD ELEMENTARY SCHOOL

TITLE SHEET - VOLUME 02

PROJECT #:	1336
ISSUE DATE:	10/28/2014
REVISIONS:	

02

PRINTED ON: 10/28/2014 11:47:41 AM FROM FILE: C:\Pivot_Architecture\Revit_20141336_HES_ARCH_Bldg_14_adavidson.rvt

© 2014 PIVOT ARCHITECTURE

PROJECT TEAM

OWNER

4J EUGENE SCHOOL DISTRICT
715 W 4TH AVENUE
EUGENE, OR 97402
PHONE: (541) 790-7417 FAX: (541) 790-7420
CONTACT: DON PHILPOT

ARCHITECT OF RECORD

PIVOT ARCHITECTURE PC
44 WEST BROADWAY, SUITE 300
EUGENE, OR 97401
PHONE: (541) 342-7291 FAX: (541) 342-1535
CONTACT: CURT WILSON

DESIGN ARCHITECT

DULL OLSON WEEKES -IBI GROUP ARCHITECTS INC.
907 SW STARK STREET
PORTLAND, OR 97205
PHONE: (503) 226-6959
CONTACT: JOHN WEEKES

STRUCTURAL ENGINEER

HOHBACH-LEWIN, INC.
296 E 5TH AVE
EUGENE, OR 97401
PHONE: (541) 349-1701 FAX: (541) 349-1702
CONTACT: VIKKI BOURCIER

CIVIL ENGINEER

BALZHISER & HUBBARD ENGINEERS
100 W 13TH AVENUE, #100
EUGENE, OR 97401
PHONE: (541) 686-8478 FAX: (541) 345-5303
CONTACT: MONICA ANDERSON

MECHANICAL/PLUMBING ENGINEER

PAE CONSULTING ENGINEERS, INC.
522 SW 5TH AVENUE, #1500
PORTLAND, OR 97204
PHONE: (503) 226-2921 FAX: (503) 226-2930
CONTACT: BRETT COURNOYER

ELECTRICAL ENGINEER

PAE CONSULTING ENGINEERS, INC.
522 SW 5TH AVENUE, #1500
PORTLAND, OR 97204
PHONE: (503) 226-2921 FAX: (503) 226-2930
CONTACT: MIKE WARE

LANDSCAPE ARCHITECT

CAMERON MCCARTHY LANDSCAPE ARCHITECTS
160 EAST BROADWAY
EUGENE, OR 97401
PHONE: (541) 485-7385 FAX: (541) 485-7389
CONTACT: MATT SCHEIBE

SHEET INDEX

GENERAL

02	TITLE SHEET - VOLUME 02
G002	GENERAL INFORMATION/INDEX - VOLUME 02

STRUCTURAL

S001	STRUCTURAL NOTES AND SYMBOLS
S111	SECTOR A (GYM/CAFETERIA)- FOUNDATION PLAN
S112	SECTOR B (MEDIA CENTER) - FOUNDATION PLAN
S113	SECTOR C (CLASSROOM BUILDING)- FOUNDATION PLAN
S114	ADMINISTRATION CANOPY - FOUNDATION AND ROOF FRAMING PLANS
S122	SECTOR B (MEDIA CENTER)- SECOND FLOOR/LOW ROOF FRAMING PLANS
S123	SECTOR C (CLASSROOM BUILDING)- SECOND FLOOR FRAMING PLAN
S131	SECTOR A (GYM/CAFETERIA)- MECHANICAL PLATFORM FRAMING PLAN
S132	SECTOR B (MEDIA CENTER) - MECHANICAL PLATFORM FRAMING PLAN
S133	SECTOR C (CLASSROOM BUILDING)- MECHANICAL PLATFORM FRAMING PLAN
S141	SECTOR A (GYM/CAFETERIA)- ROOF FRAMING PLAN
S142	SECTOR B (MEDIA CENTER) - ROOF FRAMING PLAN
S143	SECTOR C (CLASSROOM BUILDING) - ROOF FRAMING PLAN
S501	TYPICAL CONCRETE DETAILS
S502	CONCRETE DETAILS
S503	CONCRETE DETAILS
S601	TYPICAL CMU DETAILS
S602	CMU DETAILS
S701	TYPICAL STEEL DETAILS
S702	TYPICAL STEEL DETAILS
S703	STEEL BRACED FRAME ELEVATIONS
S704	STEEL BRACED FRAME DETAILS
S705	OWJ PROFILES
S706	STEEL DETAILS
S707	STEEL DETAILS
S708	STEEL DETAILS
S709	STEEL DETAILS
S901	LIGHT GAUGE FRAMING DETAILS
S902	LIGHT GAUGE FRAMING DETAILS
S903	EXTERIOR WALL ELEVATIONS

MECHANICAL

M001	SYMBOLS, LEGENDS AND ABBREVIATIONS - MECHANICAL
M002	EQUIPMENT SCHEDULE - MECHANICAL
M003	EQUIPMENT SCHEDULE - MECHANICAL
M004	VENTILATION SCHEDULE - MECHANICAL
M005	VENTILATION SCHEDULE - MECHANICAL
M006	VENTILATION SCHEDULE - MECHANICAL
M007	VENTILATION SCHEDULE - MECHANICAL
M111	SECTOR A MECHANICAL PLAN - FIRST FLOOR
M113	SECTOR B MECHANICAL PLAN - FIRST FLOOR
M115	SECTOR C MECHANICAL PLAN - FIRST FLOOR
M123	SECTOR B MECHANICAL PLAN - SECOND FLOOR
M125	SECTOR C MECHANICAL PLAN - SECOND FLOOR
M411	SECTOR A PARTIAL MECHANICAL PLANS
M413	SECTOR B PARTIAL MECHANICAL PLANS
M414	SECTOR B PARTIAL MECHANICAL PLANS
M415	SECTOR C PARTIAL MECHANICAL PLANS
M416	PARTIAL PLANS - MECHANICAL
M501	DETAILS - MECHANICAL
M502	DETAILS - MECHANICAL

PLUMBING

P001	SYMBOLS, LEGENDS AND ABBREVIATIONS - PLUMBING
P002	EQUIPMENT SCHEDULE - PLUMBING
P101	SECTOR A PLUMBING PLAN - UNDERGROUND
P103	SECTOR B PLUMBING PLAN - UNDERGROUND
P105	SECTOR C PLUMBING PLAN - UNDERGROUND
P111	SECTOR A PLUMBING PLAN - FIRST FLOOR
P113	SECTOR B PLUMBING PLAN - FIRST FLOOR
P115	SECTOR C PLUMBING PLAN - FIRST FLOOR
P121	SECTOR A PARTIAL PLUMBING PLANS
P123	SECTOR B PLUMBING PLAN - SECOND FLOOR
P125	SECTOR C PLUMBIGN PLAN - SECOND FLOOR
P130	OVERALL ROOF PLAN - PLUMBING
P131	SECTOR B PARTIAL PLUMBING PLANS
P411	SECTOR A PARTIAL PLUMBING PLAN - BOILER ROOM AND YARD
P501	DETAILS - PLUMBING
P502	DETAILS - PLUMBING
P601	RISER DIAGRAMS - PLUMBING
P602	RISER DIAGRAMS - PLUMBING

FIRE PROTECTION

FP001	SYMBOLS, LEGENDS AND ABBREVIATIONS - FIRE PROTECTION
FP101	OVERALL FIRST FLOOR PLAN - FIRE PROTECTION
FP102	OVERALL SECOND FLOOR PLAN - FIRE PROTECTION
FP103	MECHANICAL PLATFORMS - FIRE PROTECTION
FP501	DETAILS - FIRE PROTECTION

ELECTRICAL

E001	SYMBOLS, LEGENDS AND ABBREVIATIONS - ELECTRICAL
E002	LUMINAIRE SCHEDULE
E003	LUMINAIRE SCHEDULE
E010	SITE PLAN - ELECTRICAL
E011	SITE PLAN - ELECTRICAL
E012	SITE PLAN - ELECTRICAL
E013	OVERALL ELECTRICAL PLAN - TELECOMMUNICATIONS
E014	OVERALL ELECTRICAL PLAN - POWER
E015	OVERALL SITE PLAN TELECOMMUNICATIONS
E111	SECTOR A POWER PLAN - FIRST FLOOR
E113	SECTOR B POWER PLAN - FIRST FLOOR
E115	SECTOR C POWER PLAN - FIRST FLOOR
E121	SECTOR A POWER PLAN - SECOND FLOOR
E123	SECTOR B POWER PLAN - SECOND FLOOR
E125	SECTOR C POWER PLAN - SECOND FLOOR
E131	SECTOR A FIRE ALARM PLAN - FIRST FLOOR
E133	SECTOR B FIRE ALARM PLAN - FIRST FLOOR
E135	SECTOR C FIRE ALARM PLAN - FIRST FLOOR
E143	SECTOR B FIRE ALARM PLAN - SECOND FLOOR
E145	SECTOR C FIRE ALARM PLAN - SECOND FLOOR
E151	SECTOR A LIGHTING PLAN - FIRST FLOOR
E153	SECTOR B LIGHTING PLAN - FIRST FLOOR
E155	SECTOR C LIGHTING PLAN - FIRST FLOOR
E162	SECTOR A LIGHTING PLAN - SECOND FLOOR
E163	SECTOR B LIGHTING PLAN - SECOND FLOOR
E165	SECTOR C LIGHTING PLAN - SECOND FLOOR
E181	ENLARGED PLAN - KITCHEN - ELECTRICAL
E411	SECTOR A PARTIAL ELECTRICAL PLAN - BOILER ROOM & YARD
E412	SECTOR A PARTIAL ELECTRICAL PLAN - LOFT
E413	SECTOR B PARTIAL ELECTRICAL PLAN - LOFTS
E414	SECTOR B PARTIAL ELECTRICAL PLAN - LOFT
E415	SECTOR C PARTIAL ELECTRICAL PLAN - LOFT
E416	MEDIA ROOF - POWER
E501	DETAILS - ELECTRICAL
E601	ONE LINE DIAGRAM - ELECTRICAL
E602	ONE LINE DIAGRAM - ELECTRICAL
E603	PANEL SCHEDULES - ELECTRICAL
E604	PANEL SCHEDULES - ELECTRICAL
E605	PANEL SCHEDULES - ELECTRICAL
E606	PANEL SCHEDULES - ELECTRICAL
E607	PANEL SCHEDULES
E701	SCHEDULES - ELECTRICAL
E702	SCHEDULES - ELECTRICAL
E703	SCHEDULES - ELECTRICAL

LOW VOLTAGE

T101	OVERALL SITE PLAN
T110	OVERALL 1ST FLOOR PLAN
T111	PARTIAL 1ST FLOOR PLAN SECTOR A
T112	PARTIAL 1ST FLOOR PLAN SECTOR B
T113	PARTIAL 1ST FLOOR PLAN SECTOR C
T120	OVERALL 2ND FLOOR PLAN
T121	PARTIAL 2ND FLOOR PLAN SECTOR B
T122	PARTIAL 2ND FLOOR PLAN SECTOR C
T501	PARTIAL PLANS TELECOM ROOMS
T701	TELECOM DETAILS
T702	TELECOM DETAILS
T703	TELECOM DETAILS

FOOD SERVICE

FS101	FOOD SERVICE EQUIPMENT PLAN
FS102	FOOD SERVICE PLUMBING PLAN
FS103	FOOD SERVICE MECHANICAL PLAN
FS103A	FOOD SERVICE CANOPY HOOD DETAILS
FS103B	FOOD SERVICE CANOPY HOOD DETAILS
FS103C	FOOD SERVICE CANOPY HOOD DETAILS
FS104	FOOD SERVICE ELECTRICAL/REFRIG. PLAN
FS201	FOOD SERVICE WALK-IN DETAILS
FS202	FOOD SERVICE FABRICATION DETAILS
FS203	FOOD SERVICE FABRICATION DETAILS
FS204	FOOD SERVICE FABRICATION DETAILS

SOUND SYSTEM

SS001	SOUND SYSTEM FUNCTIONAL DIAGRAMS, SCHEDULES, DETAILS
SS111	SOUND SYSTEM CABLE AND CONDUIT

PIVOT ARCHITECTURE

REGISTERED ARCHITECT
CURTIS M. WILSON
EUGENE, OREGON
3543
STATE OF OREGON

IBI GROUP

dowa

HOWARD RECONCILED SET
4J EUGENE SCHOOL DISTRICT
700 HOWARD AVE, EUGENE, OREGON 97404
HOWARD ELEMENTARY SCHOOL

GENERAL INFORMATION/INDEX - VOLUME 02

PROJECT #:	1335
ISSUE DATE:	10/28/2014
REVISIONS:	

G002

PRINTED ON: 10/28/2014 9:42:20 AM FROM FILE: C:\Pivot_Architecture\Revit_2014\1335_HES_ARCH_Bldg_14_abavidson.rvt

© 2014 PIVOT ARCHITECTURE

GENERAL NOTES

- GENERAL

A. THESE DRAWINGS ARE COPY RIGHTED INSTRUMENTS OF SERVICE OF HOHBACH-LEWIN, INC. FOR USE ONLY ON THIS PROJECT.

B. CONTRACTOR RESPONSIBILITY - CONSTRUCTION DOCUMENTS REPRESENT THE FINISHED STRUCTURE. THE CONTRACTOR IS SOLELY RESPONSIBLE FOR CONSTRUCTION MEANS, METHODS, SEQUENCES AND SAFETY PRECAUTIONS, INCLUDING BUT NOT LIMITED TO SHORING AND TEMPORARY BRACING.

C. DIMENSIONS - USE WRITTEN DIMENSIONS ONLY. VERIFY ALL DIMENSIONS AT JOB SITE BEFORE COMMENCING WORK AND REPORT ANY DISCREPANCIES. WHERE NO DIMENSIONS ARE PROVIDED, OBTAIN CLARIFICATION PRIOR TO PROCEEDING WITH WORK.

D. COORDINATION - OPENINGS THROUGH WALLS AND FLOORS FOR MECHANICAL AND ELECTRICAL SYSTEMS SHALL BE COORDINATED BY CONTRACTOR AND CONSTRUCTED PER TYPICAL DETAILS SHOWN IN THESE DOCUMENTS. NO MECHANICAL OR ELECTRICAL SYSTEM COMPONENTS SHALL BE EMBEDDED IN SLABS OR WALLS UNLESS SPECIFICALLY DETAILED IN THESE DOCUMENTS.

E. OMISSIONS AND CONFLICTS - OMISSIONS OR CONFLICTS BETWEEN VARIOUS ELEMENTS OF THE CONSTRUCTION DOCUMENTS SHOULD BE BROUGHT TO THE ATTENTION OF THE DESIGN TEAM. IF CERTAIN FEATURES ARE NOT FULLY DELINEATED IN THE CONSTRUCTION DOCUMENTS, THEIR CONSTRUCTION SHALL BE OF THE SAME CHARACTER AS FOR SIMILAR CONDITIONS THAT ARE DELINEATED.

F. STRUCTURAL DRAWINGS ARE INTENDED TO BE USED WITH ARCHITECTURAL AND MECHANICAL DRAWINGS. THE CONTRACTOR IS RESPONSIBLE FOR COORDINATING SUCH REQUIREMENTS INTO THEIR SHOP DRAWINGS AND WORK.

G. THERE SHALL BE NO CHANGE IN SIZE OR DIMENSION OF A STRUCTURAL MEMBER, NOR SHALL ANY OPENINGS BE MADE IN ANY STRUCTURAL MEMBER, WITHOUT THE WRITTEN APPROVAL OF THE ENGINEER.

H. THE CONTRACTOR IS RESPONSIBLE FOR LIMITING THE AMOUNT OF CONSTRUCTION LOAD IMPOSED UPON STRUCTURAL FRAMING. CONSTRUCTION LOADS SHALL NOT EXCEED THE DESIGN CAPACITY OF THE FRAMING AT THE TIME THE LOADS ARE IMPOSED.

I. THE CONTRACTOR SHALL INFORM THE ENGINEER IN WRITING OF ANY DEVIATION FROM THE CONTRACT DOCUMENTS.

J. SEE DRAWINGS OTHER THAN STRUCTURAL FOR: TYPES OF FLOOR FINISH AND THEIR LOCATION, DEPRESSIONS IN FLOOR SLABS, OPENINGS IN WALLS AND FLOORS REQUIRED BY ARCHITECTURAL AND MECHANICAL FEATURES, AND ROADWAY PAVING, WALKS, RAMPS, STAIRS, CURBS, ETC.

- CONCRETE MASONRY

A. CONCRETE MASONRY:
   1. UNITS: MEDIUM WEIGHT BLOCKS (INSULATED WHERE REQUIRED), GRADE N, TYPE 1, 3,750 psi UNIT STRENGTH, F'm= 2,500 psi.
   2. GROUT: COMPRESSIVE STRENGTH OF 2,500 PSI AT 28 DAYS,
   3. MORTAR: ASTM C270, TYPE S., 1800 PSI

- CONCRETE

A. CONCRETE: 3000psi MINIMUM AT 28 DAYS

- REINFORCING STEEL

A. REINFORCING STEEL SHALL BE PLACED IN ACCORDANCE WITH ACI 315 AND ACI 318.

B. REINFORCING STEEL SHALL BE AS FOLLOWS:
   1. BARS: ASTM A615, GRADE 60 TYP. U.O.N.
   2. WELDED BARS: ASTM A706
   3. TIE WIRES AND SPIRALS: ASTM A82
   4. WELDED WIRE FABRIC: ASTM A185
   5. MECHANICAL BAR SPLICE: NOT ALLOWED UNLESS APPROVED BY ENGINEER.

C. DO NOT FIELD BEND OR STRAIGHTEN IN ANY MANNER THAT WILL DAMAGE REINFORCING.

D. PROVIDE SPLICES IN REINFORCING ONLY WHERE SHOWN ON DRAWINGS OR APPROVED IN WRITING BY ENGINEER OF RECORD.

E. WELDING TO CONFORM TO AWS D1.4

- STEEL

A. STRUCTURAL STEEL TO BE SUPPLIED DETAILED, FABRICATED AND ERECTED IN ACCORDANCE WITH A.I.S.C. SPECIFICATIONS.

B. U.O.N. STEEL SHALL BE AS FOLLOWS:
   1. WIDE FLANGE SHAPES: ASTM A992
   2. HOLLOW STRUCTURAL SECTIONS: ASTM A500B
   3. PIPES: ASTM A53, GR. B
   4. OTHER SHAPES AND PLATES: ASTM A36, ASTM A572 GR. 50 AS NOTED.
   5. BOLTS: ASTM A307
   6. HIGH STRENGTH BOLTS: ASTM A325, U.O.N.
   7. THREADED RODS: ASTM A36, U.O.N.
   8. ANCHOR RODS: F1554 GR. 36 TYP., U.O.N. AS GR. 55
   9. WELDING ELECTRODES: E-70xx U.O.N.
   10. WELDED STUDS: FLUX FILLED HEADED STUDS CONFORMING TO ASTM A108 BY NELSON OR EQUAL.

C. WELDING TO CONFORM TO AWS AND TO BE PERFORMED BY CERTIFIED WELDERS.

D. BUTT WELDS ARE TO BE COMPLETE PENETRATION U.O.N. ALL FILLET WELDS SHOWN ARE MINIMUM REQUIRED BY STRESS. INCREASE WELDS TO A.I.S.C. MINIMUM SIZES BASED ON THICKNESS OF MATERIAL JOINED U.O.N.

E. STEEL BEAMS ARE EQUALLY SPACED BETWEEN DIMENSION POINTS OR GRID LINES, U.O.N.

F. STEEL NOT RECEIVING FIRE PROOFING SHALL BE SHOP PRIMED.

G. ALL STEEL EXPOSED TO WEATHER SHALL BE HOT DIP ZINC GALVANIZED U.O.N.

H. NON SHRINK GROUT: 7500 psi COMPRESSIVE STRENGTH, NON METALLIC CONFORMING TO ASTM 1107. MASTERFLOW 928 OR EQUAL.

I. FOR SPECIAL REQUIREMENTS FOR THE SEISMIC LOAD RESISTING SYSTEM SEE SHEETS: S103 AND S104

- STEEL DECK

DECK: BY VERCO OR APPROVED EQUIVALENT SEE DET. 1/S102

- OPEN WEB STEEL JOIST:

SEE DETAIL 1/S105

- LIGHT GAUGE STEEL

A. COLD FORM STEEL USED FOR STUDS, TRACK, BLOCKING, GUSSETS, BRACE STRAPS, ETC. SHALL MEET THE REQUIREMENTS OF THE STEEL STUD MANUFACTURERS ASSOCIATION (SSMA) ICC-ES EVALUATION REPORT No. 3064P DATED FEBRUARY 2014. SEE DETAIL SHEETS FOR SIZES AND THICKNESS REQUIREMENTS.

B. COLD FORM STEEL STUD FRAMING SHALL CONFORM TO THE FOLLOWING:
   54 MIL AND HEAVIER-ASTM A653 SS (50 ksi MINIMUM YIELD)
   43 MIL AND LIGHTER-ASTM A653 SS (33 ksi MINIMUM YIELD)
   EXTERIOR MEMBERS : GALVANIZED G60 MIN.

C. ALL STEEL STUDS, JOIST & TRACK SHALL HAVE A LEGIBLE LABEL, STAMP OR EMBOSSMENT, AT A MAXIMUM OF 48 " O.C., INDICATING THE MANUFACTURER'S NAME, LOGO OR INITIALS, EVALUATION SERVICE REPORT NUMBER, THE MATERIAL BASE METAL THICKNESS (UNCOATED) IN .001 in. AND THE YIELD STRENGTH IF DIFFERENT THAN 33 ksi.

D. MILL CERTIFICATES FROM THE COIL PRODUCER SHALL BE MADE AVAILABLE IF REQUESTED. MILL CERTIFICATE TO INCLUDE AS A MINIMUM THE CHEMICAL COMPOSITION, YIELD STRENGTH, TENSILE STRENGTH, ELONGATION, AND COATING THICKNESS.

E. ALL SECTIONS TO REMAIN UNPUNCHED EXCEPT WALL STUDS MAY BE PUNCHED IN ACCORDANCE WITH ICC HOLE SIZE AND SPACING LIMITATIONS.

F. LATERAL BRIDGING OF COLD FORM STEEL STUDS IS REQUIRED WHEN SHEATHING INSTALLED DOES NOT CONTINUE FULL HEIGHT ON BOTH SIDES. FOR BRIDGING INSTALLATION SEE TYPICAL DETAIL SHEET.

G. COLD FORM STEEL STUDS SHALL HAVE FULL BEARING AGAINST INSIDE TRACK WEB PRIOR TO STUD AND TRACK ATTACHMENT. STUDS AND TRACKS SHALL BE ATTACHED BY WELDING OR 2-#8 SELF DRILLING SCREWS (ONE EA. FLANGE).

H. PRE-MANUFACTURED HANGERS, CLIPS, ETC. SHALL MEET THE REQUIREMENTS OF "SIMPSON" OR EQUIVALENT.

I. VERTICLIP SL/SLD BY THE STEEL NETWORK ICC ESR-1403 OR APPROVED EQUAL.

J. SELF-DRILLING FASTENERS HAVE BEEN DESIGNED IN ACCORDANCE WITH AISI "SPECIFICATION PROVISIONS FOR SCREW CONNECTIONS". FASTENERS SHALL BE #8 SMS U.O.N. ALL SCREWS TO BE GALVANIZED OR CORROSION RESISTANT. SCREWS SHALL CONFORM TO S.A.E. J78.

K. WELDING SHALL BE PERFORMED BY CERTIFIED WELDERS IN A FABRICATION SHOP. ALL WELDING SHALL BE IN ACCORDANCE WITH THE REQUIREMENTS OF THE LATEST AWS D1.3 CODE.
   43 MIL AND LIGHTER SHEET TO SHEET - E60XX
   54 MIL AND HEAVIER SHEET TO SHEET - E70XX

L. BUTT WELDS ON SPLICES SHALL BE USED AT ALL JOINTS IN TRACK. SPLICES IN STUDS OR BRACES SHALL NOT BE PERMITTED. WHERE STUDS ARE BURNED THROUGH BY WELDING PROVIDE SUITABLE STITCH PLATE OF SAME THICKNESS.

- LVF-(Low Velocity Fasteners), HILTI, ICC ESR-2264 (12/1/2012)

A. IN NORMAL WEIGHT CONCRETE: 0.157" X-U FASTENER, 1" MIN. EMBEDMENT 3" EDGE DISTANCE, MIN. 4" O.C. SPACING.

B. IN STRUCTURAL STEEL: 0.157" X-U FASTENER, 1/2" MIN. EDGE DISTANCE, 1" MIN. SPACING. THE ENTIRE POINTED PORTION OF L.V.F. MUST COMPLETELY PENETRATE THE STEEL.

- MISCELLANEOUS

A. EXPANSION ANCHORS: HILTI KWIK BOLT TZ (AT CONCRETE) OR APPROVED

B. EPOXY ADHESIVE: HILTI HIT-HY 200 (AT CONCRETE), HY 150 MAX (AT CMU) OR APPROVED. USE APPROVED ACRYLIC ADHESIVE IN LIEU OF 2-PART EPOXY IN COLD WEATHER APPLICATIONS.

C. NON-SHRINK GROUT: FLOWABLE WITH A MINIMUM 7-DAY STRENGTH OF 5000 PSI, MASTER BUILDERS OR APPROVED.

TESTING, SPECIAL INSPECTION AND OBSERVATION

(1) THE FOLLOWING WORK IS REQUIRED IF MARKED TO BE TESTED, SPECIAL INSPECTED, OR STRUCTURALLY OBSERVED, PER OSSC CHAPTER 17 REQUIREMENTS. TESTING SHALL BE MADE IN ACCORDANCE WITH THE CURRENT CODE BY AN APPROVED SPECIAL TESTING LAB, SPECIAL INSPECTOR, AND OR BY AN ENGINEER RETAINED BY THE OWNER.

(2) OBSERVATION SHALL BE DONE BY THE ENGINEER OF RECORD, EXCEPT PER NOTE 3. STRUCTURAL OBSERVATION BY THE ENGINEER OF RECORD WILL BE PERFORMED AT ALL KEY PHASES OF THE STRUCTURAL WORK.

(3) COMPACTION TESTING, & GRADING OPERATIONS SHALL BE OBSERVED BY A GEOTECHNICAL ENGINEER IF COMPACTED FILL IS REQUIRED.

(4) INSPECTION MAY BE PERIODIC.

ITEM	TO BE PROVIDED IF MARKED (1)		
	TESTING	SPECIAL INSPECTION	ENGINEERS OBSERVATION (2)
STRUCTURAL FILLS COMPACTION (3)	X (3)		X (3)
REINFORCING FOR CONCRETE (EXCEPT NON STRUCTURAL CURBS, PADS AND SITEWORK)			X
ANCHOR BOLT PLACEMENT			X
CONCRETE STRENGTH	X		
CONCRETE PLACEMENT (EXCEPT NON-STRUCUTRAL CURBS, PADS AND SITEWORK)		X	
CONCRETE ADHESIVE (EPOXY) ANCHORS		X (4)	
EXPANSION ANCHORS		X (4)	
STRUCTURAL WELDING (OSSC TABLE 1704.3)		X	
STRUCTURAL STEEL FOR SLRS (SEE DET. 2/S104)		X	X
HIGH STRENGTH BOLTING	X	X	X
STRUCTURAL STEEL			X
STEEL DECK & LIGHT GAGE STEEL WELDS		X	
REINFORCING FOR CMU CONSTRUCTION		X	
CMU CONSTRUCTION		X	X
GROUT FOR CMU CONSTRUCTION	X		

BASIS OF DESIGN

APPLICABLE CODE: 2014 OREGON STRUCTURAL SPECIALTY CODE (2012 INTERNATIONAL BUILDING CODE WITH 2014 OSSC AMMENDMENTS)

RISK CATEGORY: III

VERTICAL LOADS:

ROOFS:

LIVE LOAD 20 psf

SNOW LOAD Pg = 15 psf
IMPORTANCE FACTOR: Is = 1.1
SNOW EXPOSURE FACTOR, Ce = 1.0
THERMAL FACTOR: Ct = 1.1
Pf = 13 psf PLUS DRIFT, SLIDING AND UNBALANCED SNOW LOAD AS REQID PER OSSC 2014/ASCE 7-10
Pf,min = 21 psf (MEDIA CENTER)
Pf,min = 22 psf (CLASSROOM, GYM)

FLOORS:

LIVE LOAD 55 psf AT CLASSROOMS (40psf + 15 psf PARTITIONS)
80 psf AT CORRIDORS ABOVE THE FIRST FLOOR

LATERAL LOADS:

WIND: BASIC WIND SPEED: 130 mph (3 SECOND GUST)

EXPOSURE CATEGORY: C
INTERNAL PRESSURE COEFFICIENT = 0.18 (FULLY ENCLOSED)

SEISMIC: IMPORTANCE FACTOR: Ie = 1.25
MAPPED SPECTRAL ACCELERATIONS: Ss = 0.80g, S1 = 0.42g
SITE CLASS: D
SPECTRAL RESPONSE COEFFICIENTS: Sds = 0.63g, Sd1 = 0.44g
BASIC SEISMIC FORCE RESISTING SYSTEMS:
STEEL SPECIAL CONCENTRICALLY BRACED FRAME (CLASSROOM)
LIGHT-FRAME SHEAR WALLS (MEDIA CENTER)
SPECIAL CMU SHEAR WALLS (GYM)

RESPONSE MODIFICATION FACTOR: R = 6.0 (CLASSROOM)
R = 6.5 (MEDIA CENTER)
R = 5.0 (GYM)

SEISMIC DESIGN CATEGORY: D
SEISMIC RESPONSE COEFFICIENT: Cs = 0.131g (CLASSROOM)
Cs = 0.121g (MEDIA CENTER)
Cs = 0.158g (GYM)

THE EQUIVALENT STATIC FORCE PROCEDURES OF THE 2014 OSSC AND ASCE-7 (2010 EDITION) HAVE BEEN USED TO DESIGN THE PRIMARY SEISMIC FORCE ELEMENTS OF THE BUILDINGS.

GEOTECHNICAL CRITERIA:

FOUNDATIONS HAVE BEEN DESIGNED IN ACCORDANCE WITH THE GEOTECHNICAL REPORT PREPARED FOR HOWARD ELEMENTARY SCHOOL BY FOUNDATION ENGINEERING, INC. DATED DECEMBER 3, 2013.

ALLOWABLE SOIL BEARING PRESSURE = 2100psf AT STRIP FOOTINGS (DEAD PLUS LIVE LOADS)
= 2800psf AT STRIP FOOTINGS (SHORT TERM LOADS)
= 2300psf AT SPREAD FOOTINGS (DEAD PLUS LIVE LOADS)
= 3067psf AT SPREAD FOOTINGS (SHORT TERM LOADS)

STRUCTURAL SHEET INDEX

S001	STRUCTURAL NOTES AND SYMBOLS
S111	SECTOR A (GYM/ CAFETERIA): FOUNDATION PLAN
S112	SECTOR B (MEDIA CENTER): FOUNDATION PLAN
S113	SECTOR C (CLASSROOM BUILDING): FOUNDATION PLAN
S114	ADMINISTRATION CANOPY - FOUNDATION AND ROOF FRAMING PLANS
S122	SECTOR B (MEDIA CENTER): SECOND FLOOR/ LOW ROOF FRAMING PLAN
S123	SECTOR C (CLASSROOM BUILDING): SECOND FLOOR FRAMING PLAN
S131	SECTOR A (GYM/ CAFETERIA): MECHANICAL PLATFORM FRAMING PLAN
S132	SECTOR B (MEDIA CENTER): MECHANICAL PLATFORM FRAMING PLAN
S133	SECTOR C (CLASSROOM BUILDING): MECHANICAL PLATFORM/ LOW ROOF FRAMING PLAN
S141	SECTOR A (GYM/ CAFETERIA): ROOF FRAMING PLAN
S142	SECTOR B (MEDIA CENTER): ROOF FRAMING PLAN
S143	SECTOR C (CLASSROOM BUILDING): ROOF FRAMING PLAN
S501	TYPICAL CONCRETE DETAILS
S502	CONCRETE DETAILS
S503	CONCRETE DETAILS
S601	TYPICAL CMU DETAILS
S602	CMU DETAILS
S101	TYPICAL STEEL DETAILS
S102	TYPICAL STEEL DETAILS
S103	STEEL BRACED FRAME ELEVATIONS
S104	STEEL BRACED FRAME DETAILS
S105	OWJ PROFILES
S106	STEEL DETAILS
S107	STEEL DETAILS
S108	STEEL DETAILS
S109	STEEL DETAILS
S401	LIGHT GAUGE FRAMING DETAILS
S402	LIGHT GAUGE FRAMING DETAILS
S403	EXTERIOR WALL ELEVATIONS

STRUCTURAL SHOP DRAWING/ SUBMITTALS

SHOP DRAWINGS SHALL BE SUBMITTED FOR THE FOLLOWING ITEMS OF WORK:
1. CONCRETE MIX DESIGNS
2. REINFORCING FOR CONCRETE AND CMU CONSTRUCTION
3. STRUCTURAL STEEL
4. MISC. METAL FABRICATIONS
5. STEEL DECK

SHOP DRAWINGS AND STRUCTURAL CALCULATIONS BEARING THE SEAL OF OREGON PROFESSIONAL ENGINEER SHALL BE SUBMITTED FOR THE FOLLOWING ITEMS OF WORK:
1. STOREFRONT/ CURTAIN WALL SYSTEM
2. OPEN WEB STEEL JOISTS

ABBREVIATIONS

&	AND	LONG.	
@	AT	TRAN.	LONGITUDINAL TRANSVERSE
A.B.	ANCHOR BOLT	L.V.F.	LOW-VELOCITY FASTENER
ARCH.	ARCHITECTURAL		
		MAX.	MAXIMUM
BLDG.	BUILDING	M.B.	MACHINE BOLTS (UNFINISHED)
BLKG.	BLOCKING	MIN.	MINIMUM
BM.	BEAM		
B.N.	BOUNDARY NAIL	(N)	NEW
B.O.	BOTTOM OF	N.S.	NEAR SIDE
B.O.C.	BOTTOM OF CONCRETE	NTS.	NOT TO SCALE
BTM.	BOTTOM		
BTWN	BETWEEN	O.C.	ON CENTER
		OPP.	OPPOSITE
		OPG	OPENING
℄	CENTER LINE		
C.G.S.	CENTER OF GRAVITY OF POST-TENSIONING STRAND	PL	PLATE
		PLY.	PLYWOOD
		P/T	POST TENSIONING
C.J.	CONTROL JOINT		
C.J.P.	COMPLETE JOINT PENETRATION	R.C.J.	ROUGHENED CONSTRUCTION JOINT
		REINF.	REINFORCEMENT
CLR.	CLEAR COVER	REQD.	REQUIRED
COL.	COLUMN		
CONC.	CONCRETE	S.A.D.	SEE ARCHITECTURAL DRAWINGS
CONT.	CONTINUOUS	S.C.D.	SEE CIVIL DRAWINGS
		SCHED.	SCHEDULE
DBL	DOUBLE	S.D.B.O.	SEE DRAWINGS BY OTHERS
DBO.	DRAWING BY OTHER	SIM.	SIMILAR
DET.	DETAIL	S.J.	SEISMIC JOINT
D.C.	DEMAND CRITICAL	S.L.R.S.	SEISMIC LOAD RESISTING SYSYEM
D.F.	DOUGLAS FIR	S.M.D.	SEE MECHANICAL DRAWINGS
DWG.	DRAWING	S.M.S.	SHEET METAL SCREW
		S.O.G.	SLAB ON GRADE
(E)	EXISTING	SPEC.	SPECIFICATION
EA.	EACH	SQ.	SQUARE
EL.	ELEVATION	SYM.	SYMMETRICAL
E.N.	EDGE NAIL		
EW.	EACH WAY		
EXT.	EXTERIOR	T&B	TOP AND BOTTOM
		T&G	TONGUE AND GROOVE
FDN.	FOUNDATION	T.D.	TIE DOWN
FIN.	FINISH	T.O.C.	TOP OF CONCRETE
FLR.	FLOOR	T.O.F.	TOP OF FINISH
F.N.	FIELD NAIL	T.O.S.	TOP OF STEEL FRAMING
F.O.C.	FACE OF CONCRETE	T.P.	TOP OF PLATE
F.O.S.	FACE OF STUD	TYP.	TYPICAL
F.S.	FAR SIDE		
FTG.	FOOTING	U.O.N.	UNLESS OTHERWISE NOTED
G.C.	GENERAL CONTRACTOR	VERT.	VERTICAL
		V.I.F.	VERIFY IN FIELD
H.D.	HOLD DOWN		
HDR.	HEADER	W/	WITH
HORIZ.	HORIZONTAL	W/O	WITHOUT
HSS	HOLLOW STEEL SECTION	WF	WIDE FLANGE
J.H.	JOIST HANGER		

PIVOT ARCHITECTURE

STRUCTURAL REGISTERED PROFESSIONAL ENGINEER 65387PE OREGON JAN 23, 2014 VIVEK H. BOURNIER Expires: 12-31-15

IBI GROUP

OWJ

HOHBACH-LEWIN, INC. STRUCTURAL ENGINEERS
256 East 8th Ave. Suite 302
Eugene, OR 97401
(541) 349-1700, Fax (541) 349-1702

HOWARD RECONCILED SET

EUGENE SCHOOL DISTRICT 4J
700 HOWARD AVE. EUGENE, OREGON 97404
HOWARD ELEMENTARY SCHOOL

STRUCTURAL NOTES AND SYMBOLS

PROJECT #:	1330
ISSUE DATE:	10/28/2014
DRAWN:	AMA
CHECKED:	VHB
REVISIONS:	

S001

H-L #9547.1

© 2014 PIVOT ARCHITECTURE

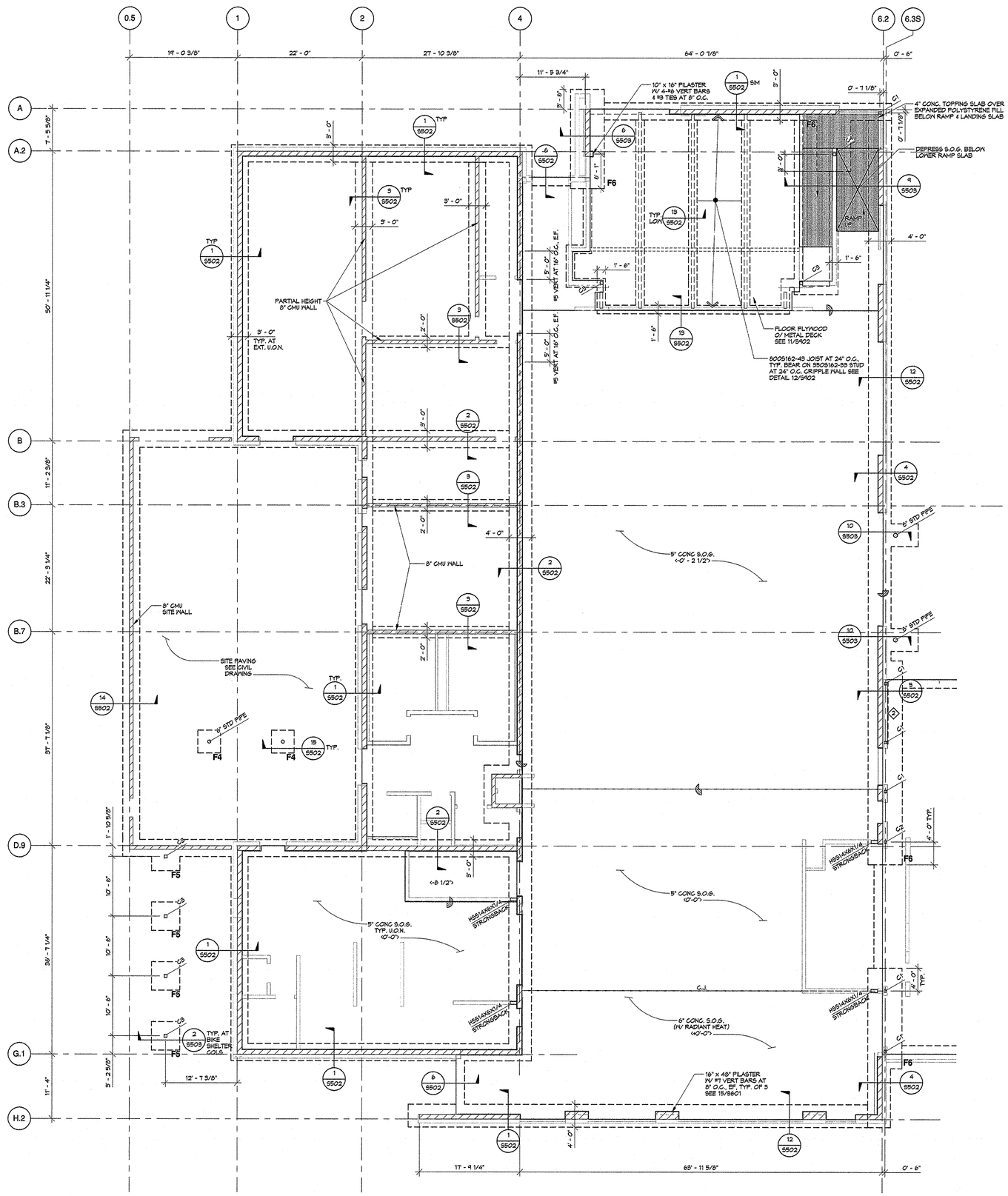

SECTOR A - FOUNDATION PLAN

1/8" = 1'-0"

FOUNDATION PLAN NOTES

1. SEE ARCHITECTURAL DRAWINGS FOR ALL DIMENSIONS.
2. SEE S001 FOR GENERAL STRUCTURAL NOTES AND SYMBOLS.
3. SEE CIVIL DRAWINGS FOR TOP OF FINISHED FLOOR DATUM ELEV= TOP OF FINISHED FLOOR SLAB REL. ELEV. = 0'-0"
4. REL. ELEV. OF TOP OF FOOTING = -1'-4", TYP. U.O.N. THUS: T.O. FTG / -2'-0"

FOUNDATION PLAN SYMBOLS

DENOTES 10" NOMINAL CMU WALL, TYP. UNLESS OTHERWISE NOTED ON PLAN REINFORCING PER 2/S601, U.O.N.

6" STD. PIPE — DENOTES 6" STANDARD STEEL PIPE COLUMN

HSS STRONGBACK — DENOTES HSS 'STRONGBACK' COLUMN FULL HEIGHT TO ROOF. SIZE PER PLAN SEE DETAIL 4/S503 FOR BASE CONNECTION

C.J. — DENOTES SLAB CONSTRUCTION (POUR) PER 5/S501, SEE ARCHITECTURAL SLAB PLANS FOR BLOCK-OUTS AND OTHER C.J. INFORMATION

FX — DENOTES FOOTING PER SCHEDULE BELOW

DENOTES SLAB RECESS OR DEPRESSION, SEE ARCHITECTURAL SLAB PLANS FOR DEPTH, SIZES AND LOCATIONS

FOOTING SCHEDULE

MARK	SIZE WIDTH x LENGTH x DEPTH	LONGIT. REINF. (*)	TRANS. REINF. (**)
F4	4'-0" x 4'-0" x 1'-8"	4-#5	4-#5
F5	5'-0" x 5'-0" x 1'-8"	5-#5	5-#5
F6	6'-0" x (*) x 1'-8"	6-#5	#5 AT 12" O.C.

(*) INDICATES LENGTH PER PLAN
(**) BOTTOM BARS ONLY UNLESS OTHERWISE NOTED

HSS COLUMN SCHEDULE

ID	COLUMN SIZE	BASE PL DETAIL
C1	HSS 5x5x1/4	10/S701 (U.O.N. ON PLANS)
C3	HSS 6x6x1/4	10/S701 (U.O.N. ON PLANS
C4	HSS 6x6x3/8	10/S701

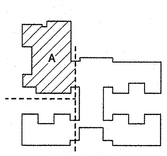

SECTOR KEY PLAN

PIVOT ARCHITECTURE

STRUCTURAL REGISTERED PROFESSIONAL ENGINEER 95380PE OREGON JAN 29, 2013 VIKKI H. BOURCIER

Expires: 12-31-15

IBI GROUP

Nova

HOHBACH-LEWIN, INC. STRUCTURAL ENGINEERS 2001 Willamette, Suite 302 Eugene, OR 97405 (541) 345-1701 Fax (541) 345 1702

HOWARD RECONCILED SET

4J ELGENE SCHOOL DISTRICT 700 HOWARD AVE. EUGENE, OREGON 97404

HOWARD ELEMENTARY SCHOOL

SECTOR A - FOUNDATION PLAN

PROJECT #:	1328
ISSUE DATE:	10/28/2014
DRAWN:	JPH
CHECKED:	VHB

REVISIONS:

S111

© 2014 PIVOT ARCHITECTURE

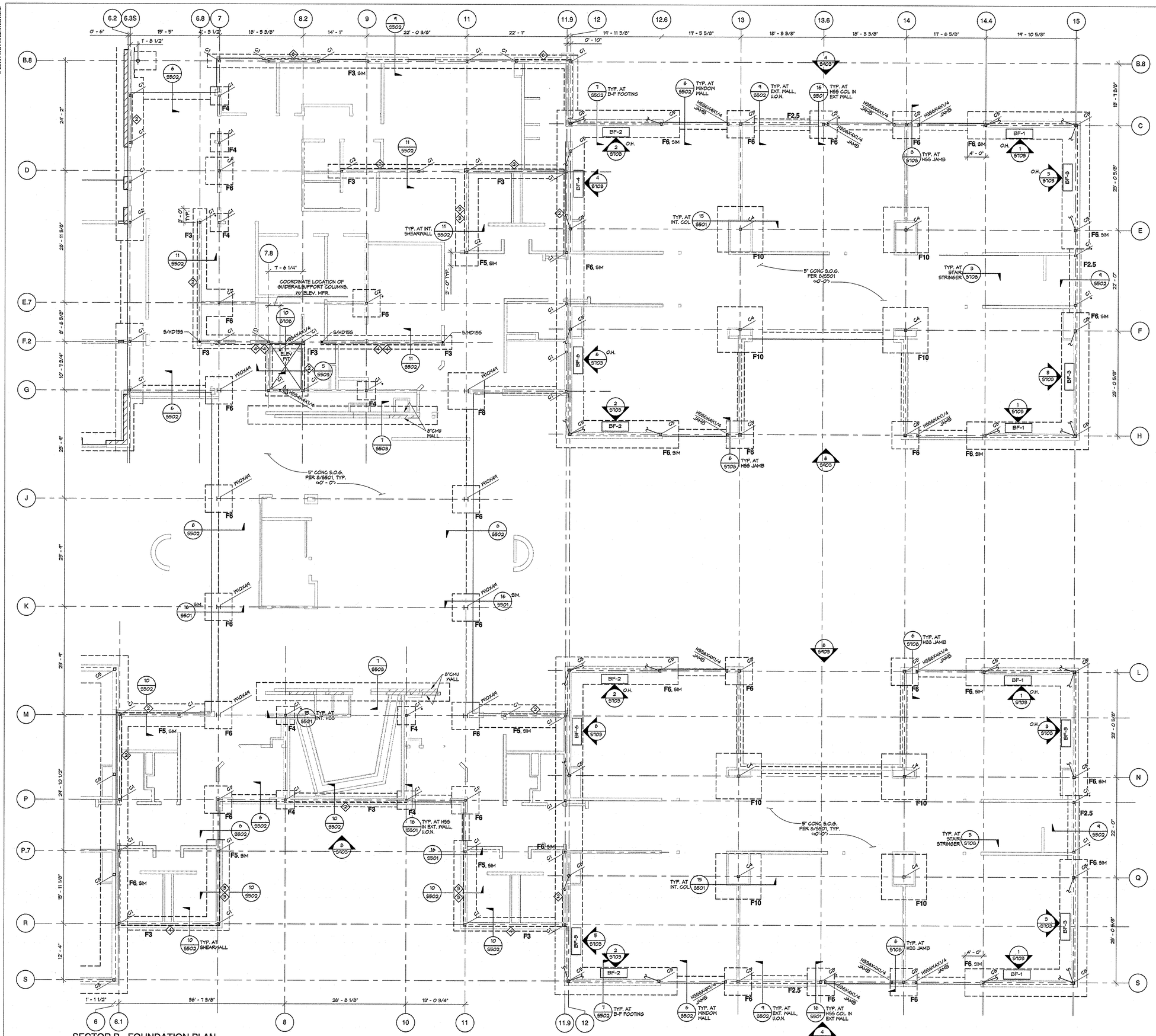

SECTOR B - FOUNDATION PLAN

1/8" = 1'-0"

FOUNDATION PLAN NOTES

1. SEE ARCHITECTURAL DRAWINGS FOR ALL DIMENSIONS.
2. SEE S001 FOR GENERAL STRUCTURAL NOTES AND SYMBOLS.
3. SEE CIVIL DRAWINGS FOR TOP OF FINISHED FLOOR DATUM ELEV= TOP OF FINISHED FLOOR SLAB REL. ELEV. = 0'-0"
4. REL. ELEV. OF TOP OF FOOTING = -1'-4", TYP. U.O.N. THUS: T.O. FTG -2'-0"

FOUNDATION PLAN SYMBOLS

- FIRE-TREATED PLYWOOD SHEATHED LIGHT GAUGE METAL STUD SHEARWALL
- DENOTES HSS COLUMN BELOW SECOND FLOOR ONLY; SEE COLUMN SCHEDULE BELOW
- DENOTES HSS COLUMN FULL HEIGHT TO ROOF; SEE COLUMN SCHEDULE BELOW
- FX — DENOTES FOOTING PER SCHEDULE THIS SHEET
- S/HDX — DENOTES HOLDOWN PER SCHEDULE, SEE DETAIL 4/S902
- C.J. — DENOTES SLAB CONSTRUCTION (POUR) PER 5/S501, SEE ARCHITECTURAL SLAB PLANS FOR BLOCK-OUTS AND OTHER C.J. INFORMATION

FOOTING SCHEDULE

MARK	SIZE WIDTH x LENGTH x DEPTH	LONGIT. REINF. (**)	TRANS. REINF. (**)
F2.5	2'-6" x (*) x 1'-6"	3-#5	#4 AT 24" O.C.
F3	3'-0" x (*) x 1'-6"	4-#5	#4 AT 24" O.C.
F4	4'-0" x 4'-0" x 1'-6"	4-#5	4-#5
F4 SIM.	4'-0" x (*) x 2'-0"	5-#4 TOP 5-#5 BOT.	#4 AT 24"O.C.
F5 SIM.	5'-0" x (*) x 1'-6"	9-#5 TOP 5-#5 BOT.	#4 AT 24"O.C.
F6	6'-0" x 6'-0" x 1'-6" OR 6'-0" x (*) x 1'-6"	6-#5	6-#5 AT 6" O.C. #5 AT 12" O.C.
F6 SIM. ***	6'-0" x (*) x 2'-0"	12-#8 TOP & BOT.	SEE DETAIL 7/S502
F8	8'-0" x 8'-0" x 2'-0"	7-#7	7-#7
F10	10'-0" x 10'-0" x 2'-0"	9-#7	9-#7

(*) INDICATES LENGTH PER PLAN
(**) BOTTOM BARS ONLY UNLESS OTHERWISE NOTED
(***) BRACE FRAME FOOTINGS

HSS COLUMN SCHEDULE

ID	COLUMN SIZE	BASE PL DETAIL
C1 *	HSS 5x5x1/4	10/S101 (U.O.N. ON PLANS)
C2 *	HSS 5x5x3/8	10/S101
C3	HSS 6x6x1/4	10/S101
C4	HSS 6x6x3/8	10/S101
C5	HSS 6x6x1/2	8/S104

(*) AT HSS COLUMNS THAT OCCUR AT THE END OF SHEARWALLS, PROVIDE ADD'L STIRRUPS PER DETAILS 15/16/S502

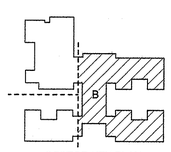

SECTOR KEY PLAN

PIVOT ARCHITECTURE

STRUCTURAL REGISTERED PROFESSIONAL ENGINEER 55387PE OREGON 10.23.2014 VIKKI M. BOUWER Expires: 12-31-15

IBI GROUP

Iowa

HOHBACH-LEWIN, INC. STRUCTURAL ENGINEERS 1136 Pacific Building, Suite 300 Eugene, OR 97401 (541) 343-1001, Fax (541) 343-1002

HOWARD RECONCILED SET
EUGENE SCHOOL DISTRICT
700 HOWARD AVE, EUGENE, OREGON 97404
HOWARD ELEMENTARY SCHOOL

SECTOR B - FOUNDATION PLAN

PROJECT #:	13335
ISSUE DATE:	10/08/2014
DRAWN:	JPA
CHECKED:	VMB
REVISIONS:	

S112

© 2014 PIVOT ARCHITECTURE

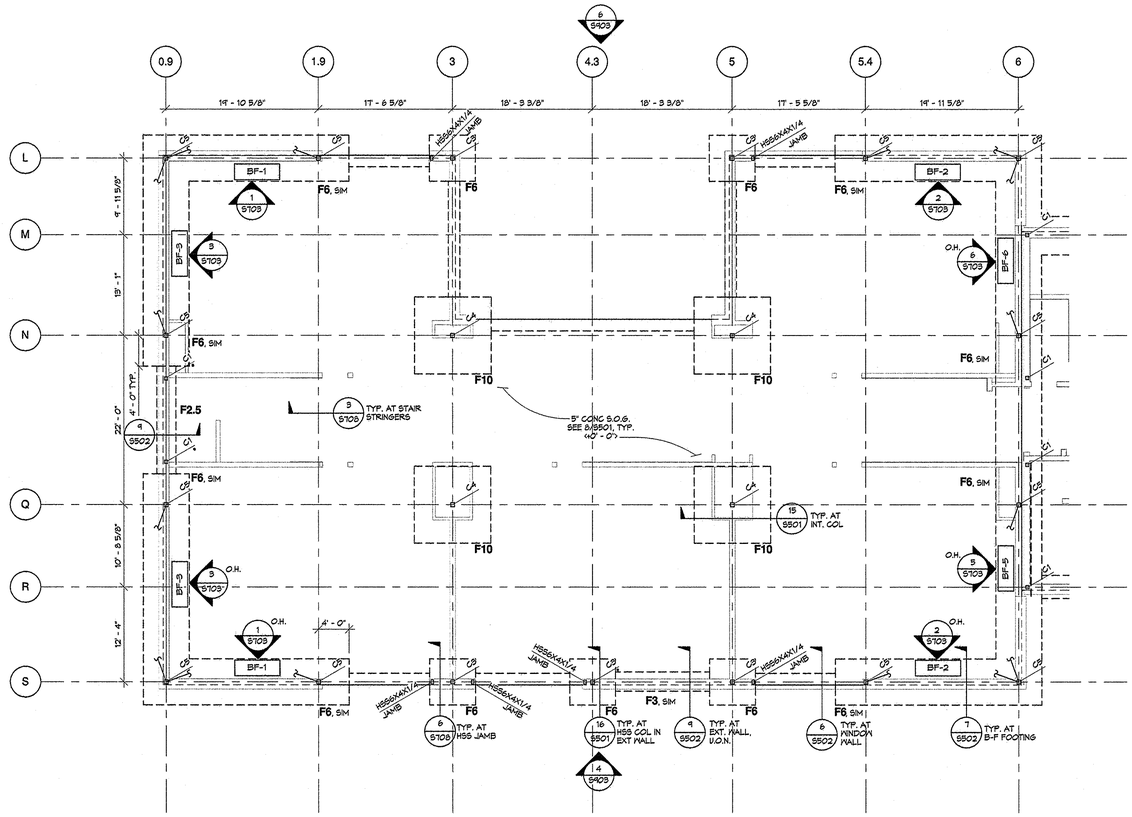

SECTOR C - FOUNDATION PLAN

1/8" = 1'-0"

FOUNDATION PLAN NOTES

1. SEE ARCHITECTURAL DRAWINGS FOR ALL DIMENSIONS.
2. SEE S001 FOR GENERAL STRUCTURAL NOTES AND SYMBOLS.
3. SEE CIVIL DRAWINGS FOR TOP OF FINISHED FLOOR DATUM ELEV= TOP OF FINISHED FLOOR SLAB REL. ELEV. = 0'-0"
4. REL. ELEV. OF TOP OF FOOTING = -1'-4", TYP. U.O.N. THUS: T.O. FTG. -1'-0"

FOUNDATION PLAN SYMBOLS

BF-X	DENOTES SPECIAL CONCENTRIC BRACED FRAME, SEE ELEVATIONS ON SHEET S103
C1	DENOTES HSS COLUMN BELOW SECOND FLOOR ONLY PER PLAN, SEE COLUMN SCHEDULE BELOW
C1	DENOTES HSS COLUMN FULL HEIGHT TO ROOF, SEE COLUMN SCHEDULE BELOW
FX	DENOTES FOOTING PER SCHEDULE THIS SHEET
C.J.	DENOTES SLAB CONSTRUCTION (POUR) PER 5/S501, SEE ARCHITECTURAL SLAB PLANS FOR BLOCK-OUTS AND OTHER C.J. INFORMATION

FOOTING SCHEDULE			
MARK	SIZE WIDTH x LENGTH x DEPTH	LONGIT. REINF. (*)	TRANS. REINF. (**)
F2.5	2'-6" x (*) x 1'-6"	3-#5	#4 AT 24" O.C.
F6	6'-0" x 6'-0" x 1'-6"	6-#5	6-#5
F6 SIM.	6'-0" x (*) x 2'-0"	12-#8 TOP & BOT	SEE DET. 7/S502
F10	10'-0" x 10'-0" x 2'-0"	9-#7	9-#7

(*) INDICATES LENGTH PER PLAN
(**) BOTTOM BARS ONLY UNLESS OTHERWISE NOTED

HSS COLUMN SCHEDULE		
ID	COLUMN SIZE	BASE REDETAIL
C1	HSS 5x5x1/4	10/S101 (U.O.N. ON PLANS)
C2	HSS 5x5x3/8	10/S101
C3	HSS 6x6x1/4	10/S101
C4	HSS 6x6x3/8	10/S101
C5	HSS 6x6x1/2	6/S104

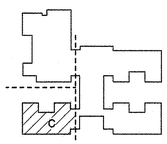

SECTOR KEY PLAN

PIVOT ARCHITECTURE

REGISTERED PROFESSIONAL ENGINEER 65387PE STRUCTURAL OREGON JULY 23, 2014 VIKRAM K. BONDRIEN

Expires: 12-31-15

IBI GROUP

HOHBACH-LEWIN, INC. STRUCTURAL ENGINEERS 2700 E. 19th Ave., Suite 200 Eugene, OR 97403 (541) 343-1001, Fax (541) 343-1002

HOWARD RECONCILED SET

EUGENE SCHOOL DISTRICT 4J
700 HOWARD AVE. EUGENE, OREGON 97404

HOWARD ELEMENTARY SCHOOL

SECTOR C - FOUNDATION PLAN

PROJECT #:	1305	REVISIONS:	
ISSUE DATE:	10/28/2014		
DRAWN:	JPL		
CHECKED:	VKB		

S113

© 2014 PIVOT ARCHITECTURE

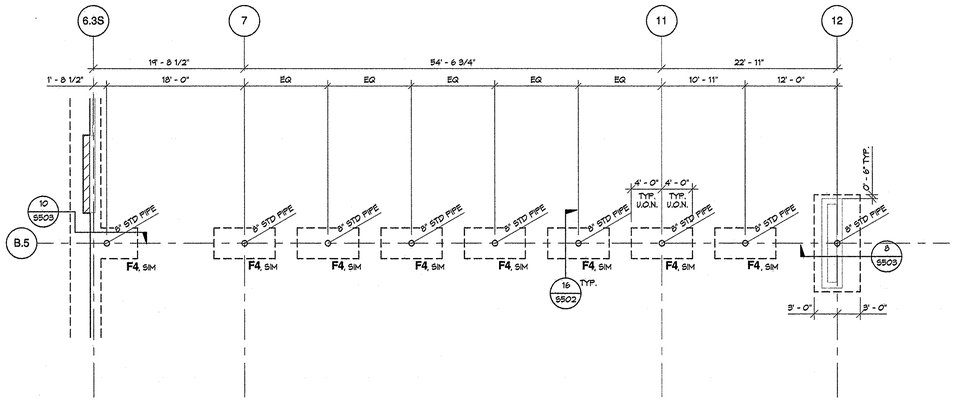

1 ADMINISTRATION CANOPY - FOUNDATION PLAN
1/8" = 1'-0"

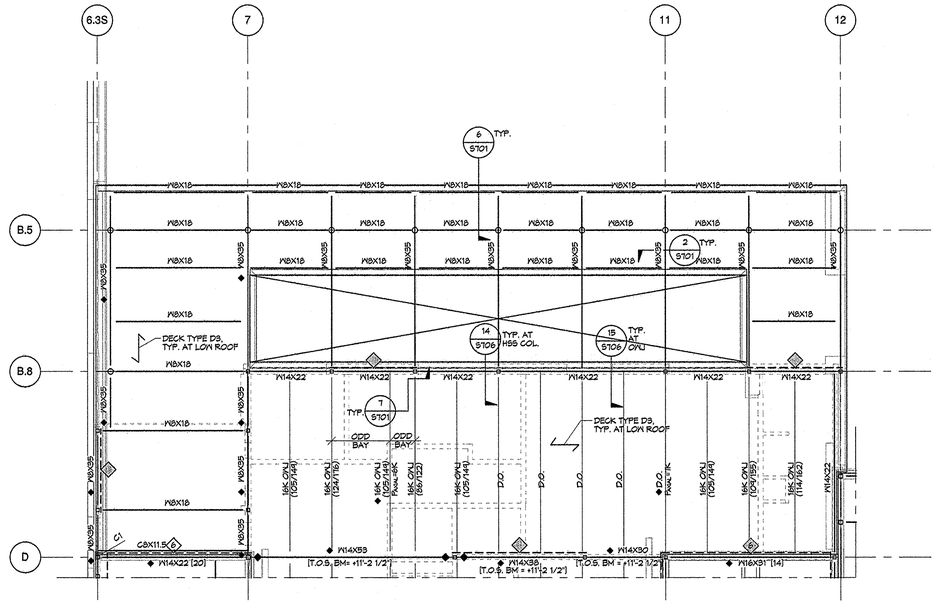

2 ADMINISTRATION CANOPY - ROOF FRAMING PLAN
1/8" = 1'-0"

FOUNDATION PLAN NOTES

1. SEE ARCHITECTURAL DRAWINGS FOR ALL DIMENSIONS.
2. SEE S001 FOR GENERAL STRUCTURAL NOTES AND SYMBOLS.
3. SEE CIVIL DRAWINGS FOR TOP OF FINISHED FLOOR DATUM ELEV= TOP OF FINISHED FLOOR SLAB REL. ELEV. = 0'-0"
4. REL. ELEV. OF TOP OF FOOTING = -1'-4", TYP. U.O.N. THUS: T.O. FTG / -2'-0"

FOUNDATION PLAN SYMBOLS

8" STD PIPE	DENOTES 8" STANDARD STEEL PIPE COL.
FX	DENOTES FOOTING PER SCHEDULE THIS SHEET
C.J.	DENOTES SLAB CONSTRUCTION (POUR) PER 5/S501, SEE ARCHITECTURAL SLAB PLANS FOR BLOCK-OUTS AND OTHER C.J. INFORMATION
C.J.	DENOTES CMU CONTROL JOINT PER 4/S601
	DENOTES SLAB RECESS OR DEPRESSION, SEE ARCHITECTURAL SLAB PLANS FOR DEPTH, SIZES AND LOCATIONS

FOOTING SCHEDULE			
MARK	SIZE WIDTH x LENGTH x DEPTH	LONGIT. REINF. (**)	TRANS. REINF. (**)
F2.5	2'-6" x (*) x 1'-6"	3-#5	#4 AT 24" O.C.
F3 SIM.	3'-0" x (*) x 1'-6"	3-#5	3-#5
F4	4'-0" x 4'-0" x 1'-6"	4-#5	4-#5
F4 SIM.	4'-0" x (*) x 2'-0"	5-#4 TOP 5-#5 BOT.	#4 AT 24"O.C.

(*) INDICATES LENGTH PER PLAN
(**) BOTTOM BARS ONLY UNLESS OTHERWISE NOTED

ROOF FRAMING NOTES

1. SEE SHEET S001 FOR GENERAL STRUCTURAL NOTES AND SYMBOLS.
2. SEE ARCHITECTURAL DRAWINGS FOR T.O. STEEL, ELEVATIONS NOT NOTED, ROOF SLOPES, ETC.
3. JOISTS ARE EQUALLY SPACED BETWEEN GRID LINES U.O.N.
4. SEE 1/S102 FOR ROOF DECK ATTACHMENT.
5. STEEL DETAILS 13&14/S102 FOR FRAMING AT DECK OPENINGS FOR SKYLIGHTS.
6. SEE DETAILS 1&2/S101 FOR TYPICAL W BEAM TO W BEAM CONNECTION.
7. SEE DETAIL 5/S101 FOR TYPICAL W BEAM TO HSS COLUMN CONNECTION.
8. SEE SHEETS S101 AND S102 FOR TYPICAL STEEL DETAILS NOT NOTED.
9. ALL ROOF BEAMS REQUIRE BOTTOM FLANGE BRACING AT 12'-0" O.C., MAX. SEE DETAIL 8/S102.

ROOF FRAMING SYMBOLS

	NON-STRUCTURAL WALLS BELOW FLOOR
	FIRE-TREATED PLYWOOD SHEATHED LIGHT GAUGE METAL STUD SHEARWALL BELOW THIS LEVEL, SEE SCHEDULE, DETAIL 1/S902
DX	DENOTES DIRECTION OF METAL ROOF DECK SPAN AND DECK TYPE, SEE 1/S102
OWJ	DENOTES OPEN WEB STEEL JOIST
	DENOTES BEAM BOTTOM FLANGE BRACING
	DENOTES A MEMBER OF THE LATERAL LOAD RESISTANCE SYSTEM
	DENOTES THAT CONNECTION IS PART OF THE SEISMIC LOAD RESISTING SYSTEM. SEE DETAILS 4/S101 AND 2/S104 FOR REQUIREMENTS.
24KOWJ	DENOTES OPEN WEB STEEL JOIST (24=DEPTH BY SJI); "K"="SERIES" AS DESIGNATED BY SJI. SEE 2/S105 FOR OWJ NOTES AND LOADING INFORMATION.
(XX/XX)	DENOTES UNFACTORED UNIFORMLY DISTRIBUTED DEAD LOAD/SNOW LOAD IN POUNDS PER LINEAR FOOT (PLF)
P_{AXIAL}=66K	DENOTES STRENGTH LEVEL OWJ DESIGN AXIAL FORCE (WIND/SEISMIC). SEE NOTE 4 IN DETAIL 2/S105 FOR TYPICAL OWJ AXIAL LOAD WHEN NOT NOTED ON PLAN.

PIVOT ARCHITECTURE

STRUCTURAL REGISTERED PROFESSIONAL ENGINEER 65387PE OREGON JAN. 23, 2013 VIVEK H. BOURDEKE
Expires: 12-31-15

IBI GROUP

Iowa

HOHBACH-LEWIN, INC.
STRUCTURAL ENGINEERS
258 East 8th Ave.
Eugene, OR 97401
(541) 343-3201, Fax (541) 343-1102
Suite 302

HOWARD RECONCILED SET
EUGENE SCHOOL DISTRICT
700 HOWARD AVE. EUGENE, OREGON 97404
HOWARD ELEMENTARY SCHOOL

ADMINISTRATION CANOPY - FOUNDATION AND ROOF FRAMING PLAN

PROJECT #:	1335
ISSUE DATE:	10/28/2014
DRAWN:	JPA
CHECKED:	VHB
REVISIONS:	

S114

© 2014 PIVOT ARCHITECTURE

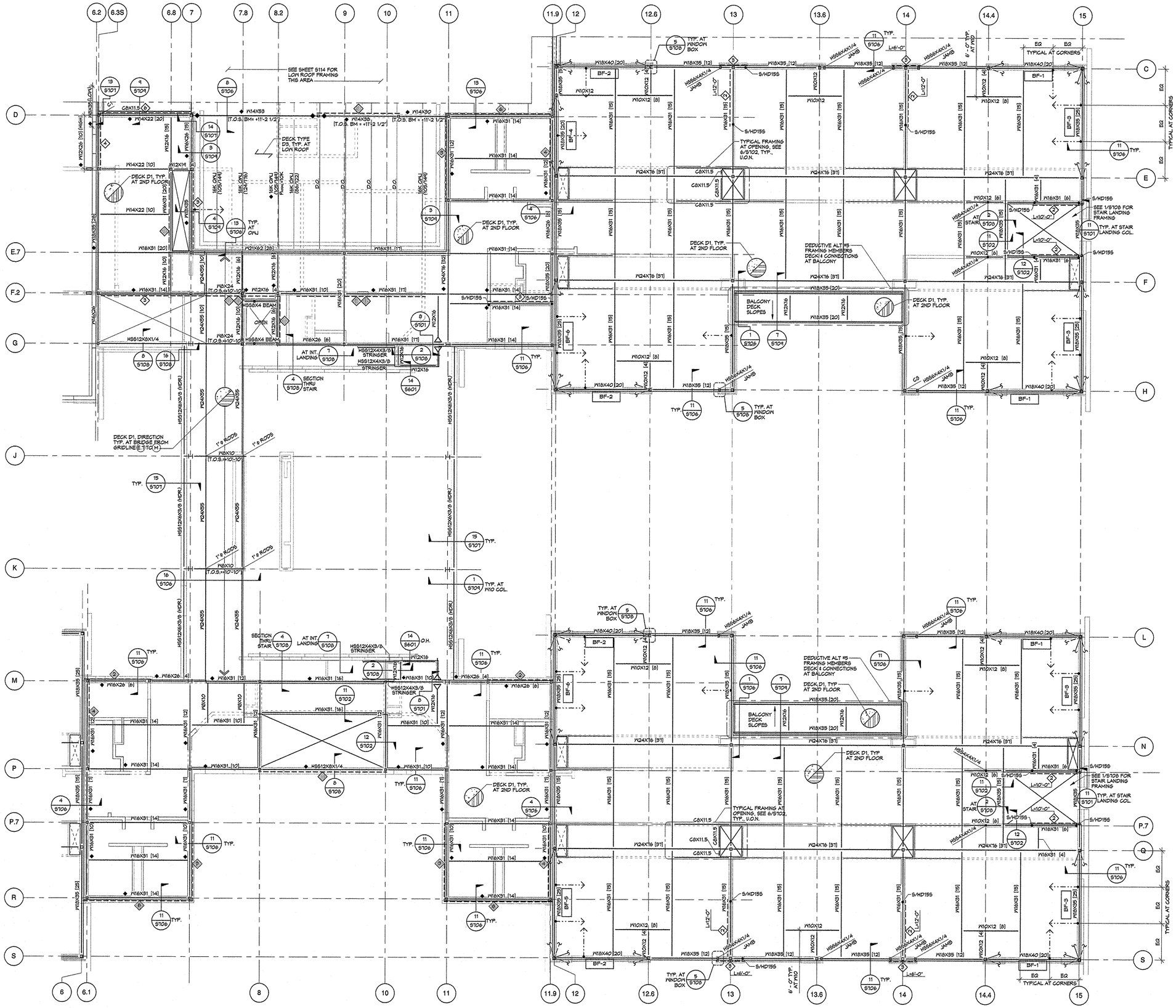

SECTOR B - SECOND FLOOR/LOW ROOF FRAMING PLAN

1/8" = 1'-0"

SECOND FLOOR PLAN NOTES

1. SEE S001 FOR GENERAL STRUCTURAL NOTES AND SYMBOLS.
2. T.O. CONCRETE = 19'-4" U.O.N.
3. T.O. STEEL = BOTTOM OF METAL DECK ELEVATION = +12'-10" TYPICAL U.O.N. ON PLAN.
4. FLOOR BEAMS ARE EQUALLY SPACED BETWEEN GRIDS UNLESS OTHERWISE NOTED.
5. SEE ARCH DRAWINGS FOR ALL FLOOR OPENINGS, INCLUDING STAIRS AND ELEVATOR.
6. SEE DETAILS 1&2/S101 FOR TYPICAL W/ BEAM TO W/ BEAM CONNECTION.
7. SEE DETAIL 5&6/S101 FOR TYPICAL W/ BEAM TO HSS COLUMN CONNECTION.
8. SEE 1/S102 FOR STEEL FLOOR DECK ATTACHMENT.
9. SEE SHEETS S101 AND S102 FOR TYPICAL STEEL DETAILS NOT NOTED.

SECOND FLOOR PLAN SYMBOLS

- WALLS BELOW FLOOR
- WALLS ABOVE FLOOR
- FIRE-TREATED PLYWOOD SHEATHED LIGHT GAUGE METAL STUD SHEARWALL ABOVE THIS LEVEL, SEE SCHEDULE, DETAIL 1/S402
- FIRE-TREATED PLYWOOD SHEATHED LIGHT GAUGE METAL STUD SHEARWALL ABOVE AND BELOW THIS LEVEL, SEE SCHEDULE, DETAIL 1/S402
- FIRE-TREATED PLYWOOD SHEATHED LIGHT GAUGE METAL STUD SHEARWALL BELOW THIS LEVEL, SEE SCHEDULE, DETAIL 1/S402
- DENOTES CONCRETE FILL O/ METAL DECK PER SCHEDULE, DETAIL 1/S102
- DENOTES BEAM BOTTOM FLANGE BRACING PER DETAIL 5/S102
- DENOTES A MEMBER OF THE LATERAL LOAD RESISTANCE SYSTEM
- [X] DENOTES NUMBER OF SHEAR STUDS, SEE DETAIL 4/S102
- DENOTES THAT CONNECTION IS PART OF THE SEISMIC LOAD RESISTING SYSTEM. SEE DETAILS 4/S101 AND 2/S104 FOR REQUIREMENTS.
- S/HDX DENOTES HOLDOWN PER SCHEDULE, SEE DETAILS 9 & 13/S402

ROOF FRAMING NOTES

1. SEE SHEET S001 FOR GENERAL STRUCTURAL NOTES AND SYMBOLS.
2. SEE ARCHITECTURAL DRAWINGS FOR T.O. STEEL, ELEVATIONS NOT NOTED, ROOF SLOPES, ETC.
3. JOISTS ARE EQUALLY SPACED BETWEEN GRID LINES U.O.N.
4. SEE 1/S102 FOR ROOF DECK ATTACHMENT.
5. STEEL DETAILS 13&14/S102 FOR FRAMING AT DECK OPENINGS FOR SKYLIGHTS.
6. SEE DETAILS 1&2/S101 FOR TYPICAL W/ BEAM TO W/ BEAM CONNECTION.
7. SEE DETAIL 5/S101 FOR TYPICAL W/ BEAM TO HSS COLUMN CONNECTION.
8. SEE SHEETS S101 AND S102 FOR TYPICAL STEEL DETAILS NOT NOTED.
9. ALL ROOF BEAMS REQUIRE BOTTOM FLANGE BRACING AT 12'-0" O.C., MAX. SEE DETAIL 8/S102.

ROOF FRAMING SYMBOLS

- DENOTES WALL BELOW ROOF
- FIRE-TREATED PLYWOOD SHEATHED LIGHT GAUGE METAL STUD SHEARWALL BELOW THIS LEVEL, SEE SCHEDULE, DETAIL 1/S402
- DX DENOTES DIRECTION OF METAL ROOF DECK SPAN AND DECK TYPE, SEE 1/S102
- DENOTES A MEMBER OF THE LATERAL LOAD RESISTANCE SYSTEM
- DENOTES HSS COLUMN BRACING PER DETAIL 12/S104
- 24KCOWJ DENOTES OPEN WEB STEEL JOIST (24-DEPTH BY 5J1); "KCW"SERIES" AS DESIGNATED BY SJI. SEE 2/S103 FOR OWJ NOTES AND LOADING INFORMATION.
- (XX/XX) DENOTES UNFACTORED UNIFORMLY DISTRIBUTED DEAD LOAD/SNOW LOAD IN POUNDS PER LINEAR FOOT (PLF)
- F_{AXIAL}=66K DENOTES STRENGTH LEVEL OWJ DESIGN AXIAL FORCE (WIND/SEISMIC). SEE NOTE 9 IN DETAIL 2/S103 FOR TYPICAL OWJ AXIAL LOAD WHEN NOT NOTED ON PLAN.

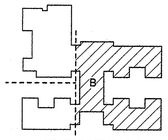

SECTOR KEY PLAN

PIVOT ARCHITECTURE

STRUCTURAL REGISTERED PROFESSIONAL ENGINEER 69368PE OREGON JULY 29, 1997 VIKRI H. BOURICH Expires: 12-31-15

IBI GROUP

Nova

HOHBACH-LEWIN, INC. STRUCTURAL ENGINEERS
Corb. Sq. 18 Suite 322
Eugene, OR 97401
(541) 349-1700, Fax (541) 349-1702

HOWARD RECONCILED SET
EUGENE SCHOOL DISTRICT
700 HOWARD AVE, EUGENE, OREGON 97404
HOWARD ELEMENTARY SCHOOL

SECTOR B - SECOND FLOOR/LOW ROOF FRAMING PLANS

13.130	REVISIONS:
PROJECT #:	
ISSUE DATE:	10/28/2014
DRAWN:	JPA
CHECKED:	VHB

S122

© 2014 PIVOT ARCHITECTURE

SECOND FLOOR PLAN NOTES

1. SEE S001 FOR GENERAL STRUCTURAL NOTES AND SYMBOLS.
2. T.O. CONCRETE = 19'-4" U.O.N.
3. T.O. STEEL = BOTTOM OF METAL DECK ELEVATION = +12'-10" TYPICAL U.O.N. ON PLAN.
4. FLOOR BEAMS ARE EQUALLY SPACED BETWEEN GRIDS UNLESS OTHERWISE NOTED.
5. SEE ARCH DRAWINGS FOR ALL FLOOR OPENINGS, INCLUDING STAIRS AND ELEVATOR.
6. SEE DETAILS 1/S/101 FOR TYPICAL WF BEAM TO WF BEAM CONNECTION.
7. SEE DETAIL 5/S/101 FOR TYPICAL WF BEAM TO HSS COLUMN CONNECTION.
8. SEE 1/S/102 FOR STEEL FLOOR DECK ATTACHMENT.
9. SEE SHEETS S/101 AND S/102 FOR TYPICAL STEEL DETAILS NOT NOTED.
10. SEE SHEET S2124 FOR SECOND FLOOR REINFORCING PLAN.

SECOND FLOOR PLAN SYMBOLS

- NON-STRUCTURAL WALLS BELOW FLOOR
- NON-STRUCTURAL WALLS ABOVE FLOOR
- STRUCTURAL WALL BELOW (SEE FOUNDATION PLAN FOR TYPE)
- 4 — FIRE-TREATED PLYWOOD SHEATHED LIGHT GAUGE METAL STUD SHEARWALL ABOVE THIS LEVEL, SEE SCHEDULE DETAIL 1/S402
- DENOTES BEAM BOTTOM FLANGE BRACING PER DETAIL 8/S102
- DENOTES CONCRETE FILL O/ METAL DECK PER SCHEDULE, DETAIL 1/S102
- [X] — DENOTES NUMBER OF SHEAR STUDS, SEE DETAIL 4/S102
- S/HDX — DENOTES HOLDOWN PER SCHEDULE, SEE DETAILS 9 & 19/S402

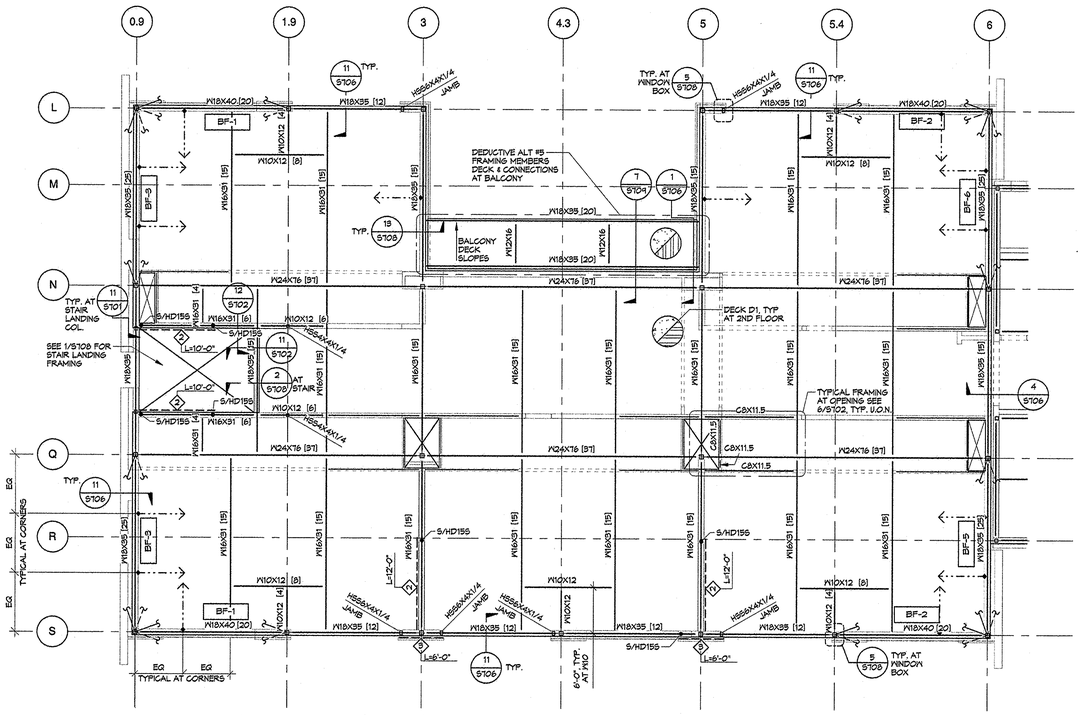

SECTOR C - SECOND LEVEL FRAMING PLAN

1/8" = 1'-0"

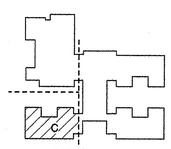

SECTOR KEY PLAN

PIVOT ARCHITECTURE

STRUCTURAL REGISTERED PROFESSIONAL ENGINEER 65387PE OREGON JAN 23,2014 VIVEK H. BOUDREAU

Expires: 12-31-15

IBI GROUP

Iowa

HOHBACH-LEWIN, INC.
STRUCTURAL ENGINEERS
1010 Lincoln St. Suite 202
Eugene, OR 97401
(541) 349-1701, Fax (541) 349-1702

HOWARD RECONCILED SET
EUGENE SCHOOL DISTRICT
700 HOWARD AVE. EUGENE, OREGON 97404
HOWARD ELEMENTARY SCHOOL

SECTOR C - SECOND FLOOR FRAMING PLAN

PROJECT #:	1336
ISSUE DATE:	10/28/2014
DRAWN:	JPA
CHECKED:	VHB
REVISIONS:	

S123

© 2014 PIVOT ARCHITECTURE

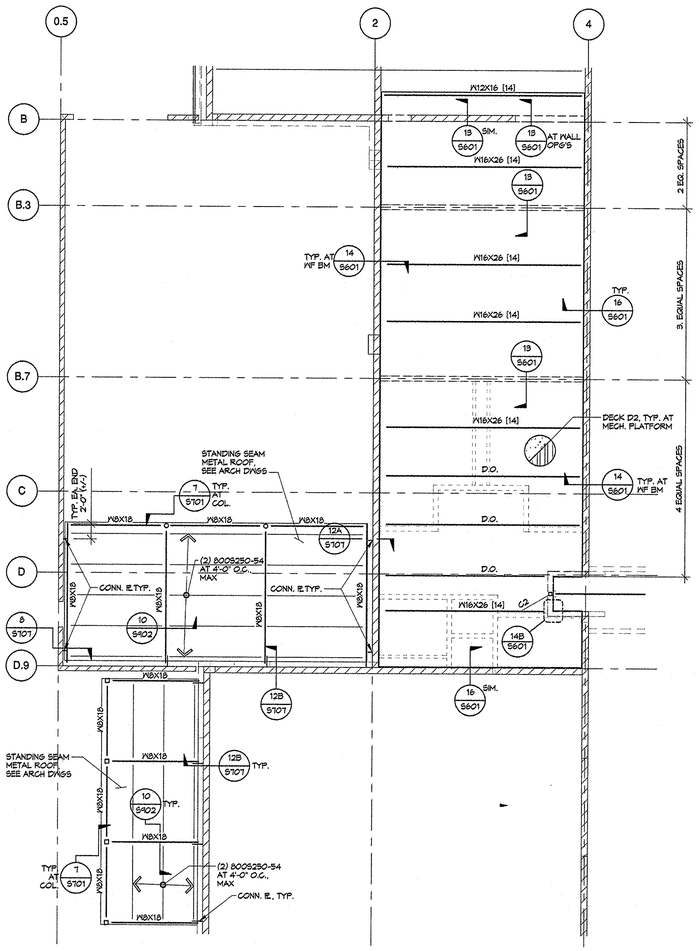

SECTOR A - MECHANICAL PLATFORM/ LOW ROOF FRAMING PLAN

1/8" = 1'-0"

MECHANICAL PLATFORM PLAN NOTES

1. SEE S001 FOR GENERAL STRUCTURAL NOTES AND SYMBOLS.
2. T.O. CONCRETE = 13'-4" U.O.N.
3. T.O. STEEL = BOTTOM OF METAL DECK ELEVATION = +13'-0" TYPICAL U.O.N. ON PLAN.
4. FLOOR BEAMS ARE EQUALLY SPACED BETWEEN GRIDS UNLESS OTHERWISE NOTED.
5. SEE ARCH DRAWINGS FOR ALL FLOOR OPENINGS.
6. SEE 1/S702 FOR STEEL FLOOR DECK ATTACHMENT.
7. SEE SHEETS S701 AND S702 FOR TYPICAL STEEL DETAILS NOT NOTED.

MECHANICAL PLATFORM SYMBOLS

- NON-STRUCTURAL WALLS BELOW FLOOR
- NON-STRUCTURAL WALLS ABOVE FLOOR
- STRUCTURAL WALL BELOW (SEE FOUNDATION PLAN FOR TYPE)
- CMU WALLS ABOVE AND BELOW FLOOR
- DENOTES CONCRETE FILL O/ METAL DECK PER SCHEDULE, DETAIL 1/S702

LOW ROOF FRAMING NOTES

1. SEE SHEET S001 FOR GENERAL STRUCTURAL NOTES AND SYMBOLS.
2. SEE ARCHITECTURAL DRAWINGS FOR T.O. STEEL, ELEVATIONS NOT NOTED, ROOF SLOPES, ETC.
3. JOISTS ARE EQUALLY SPACED BETWEEN SUPPORTS U.O.N.
4. SEE 1/S702 FOR ROOF DECK ATTACHMENT.

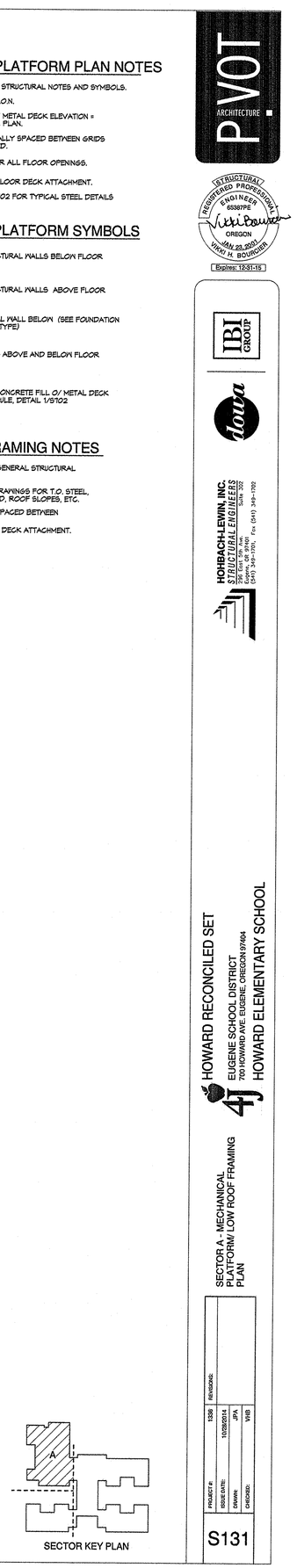

SECTOR KEY PLAN

© 2014 PIVOT ARCHITECTURE

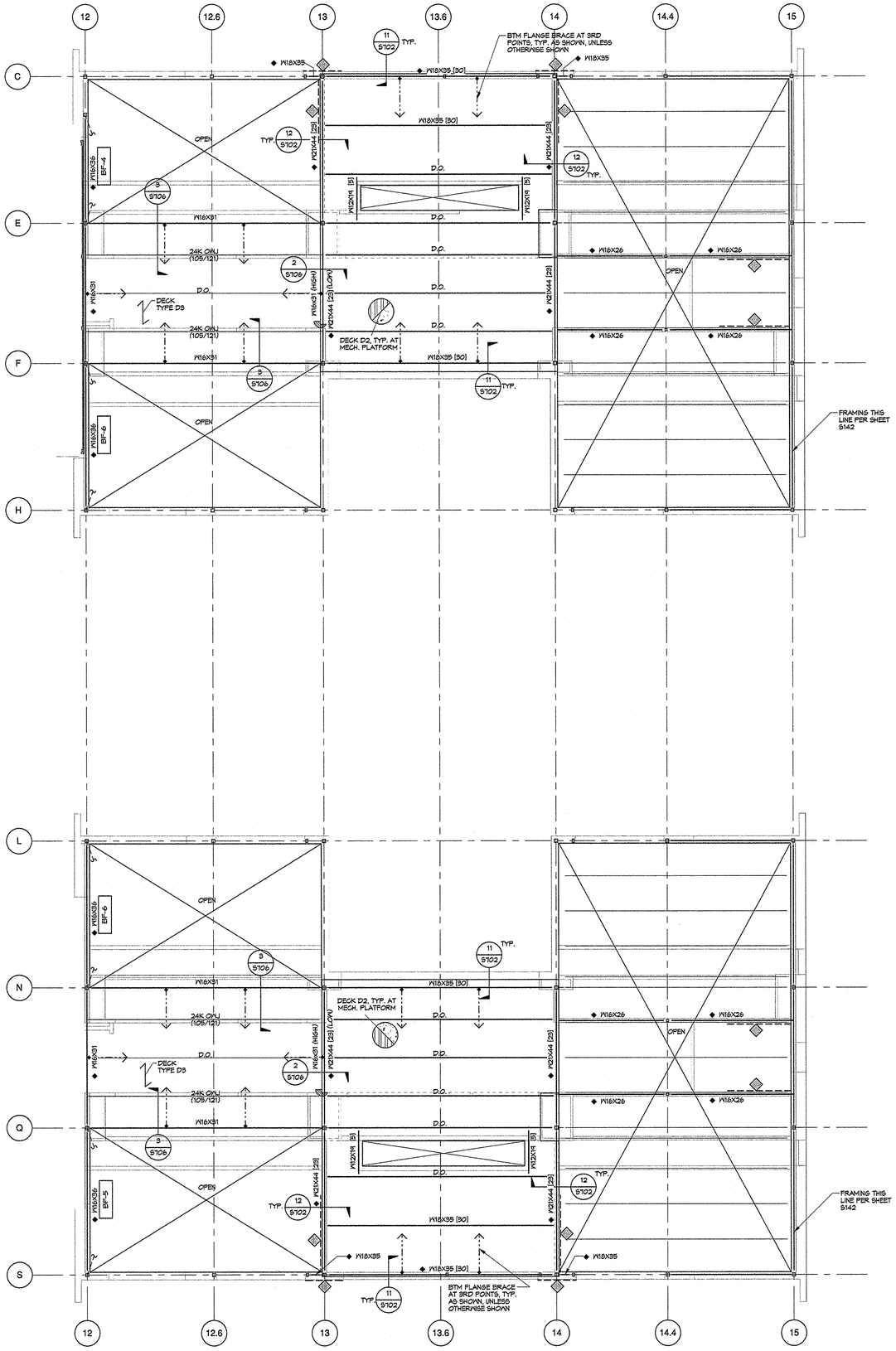

SECTOR B - MECHANICAL PLATFORM/ LOW ROOF FRAMING PLAN

1/8" = 1'-0"

MECHANICAL PLATFORM NOTES

1. SEE S001 FOR GENERAL STRUCTURAL NOTES AND SYMBOLS.
2. T.O. CONCRETE = 26'-0" U.O.N.
3. T.O. STEEL = BOTTOM OF METAL DECK ELEVATION = +25'-5" TYPICAL U.O.N. ON PLAN.
4. FLOOR BEAMS ARE EQUALLY SPACED BETWEEN GRIDS UNLESS OTHERWISE NOTED.
5. SEE ARCH DRAWINGS FOR ALL FLOOR OPENINGS, INCLUDING STAIRS AND ELEVATOR.
6. SEE DETAILS 1&2/S701 FOR TYPICAL W/ BEAM TO W/ BEAM CONNECTION.
7. SEE DETAIL 3/S701 FOR TYPICAL W/ BEAM TO HSS COLUMN CONNECTION.
8. SEE 1/S702 FOR STEEL FLOOR DECK ATTACHMENT.
9. SEE SHEETS S701 AND S702 FOR TYPICAL STEEL DETAILS NOT NOTED.

MECHANICAL PLATFORM SYMBOLS

- NON-STRUCTURAL WALLS BELOW FLOOR
- NON-STRUCTURAL WALLS ABOVE FLOOR
- FIRE-TREATED PLYWOOD SHEATHED LIGHT GAUGE METAL STUD SHEARWALL BELOW THIS LEVEL. SEE SCHEDULE, DETAIL 1/S902
- DENOTES BEAM BOTTOM FLANGE BRACING PER DETAIL 8/S702
- DENOTES CONCRETE FILL O/ METAL DECK PER SCHEDULE, DETAIL 1/S702
- [X] DENOTES NUMBER OF SHEAR STUDS, SEE DETAIL 9/S702

ROOF FRAMING PLAN NOTES

1. SEE SHEET S001 FOR GENERAL STRUCTURAL NOTES AND SYMBOLS.
2. SEE ARCHITECTURAL DRAWINGS FOR T.O. STEEL, ELEVATIONS NOT NOTED, ROOF SLOPES, ETC.
3. JOISTS ARE EQUALLY SPACED BETWEEN GRID LINES U.O.N.
4. SEE 1/S702 FOR ROOF DECK ATTACHMENT.
5. STEEL DETAILS 13&14/S702 FOR FRAMING AT DECK OPENINGS FOR SKYLIGHTS.
6. SEE DETAILS 1&2/S701 FOR TYPICAL W/ BEAM TO W/ BEAM CONNECTION.
7. SEE DETAIL 3/S701 FOR TYPICAL W/ BEAM TO HSS COLUMN CONNECTION.
8. SEE SHEETS S701 AND S702 FOR TYPICAL STEEL DETAILS NOT NOTED.

ROOF FRAMING PLAN SYMBOLS

- DENOTES WALL BELOW ROOF
- DX — DENOTES DIRECTION OF METAL ROOF DECK SPAN AND DECK TYPE, SEE 1/S702
- OWJ — DENOTES OPEN WEB STEEL JOIST
- DENOTES BEAM BOTTOM FLANGE BRACING PER DETAIL 8/S702
- DENOTES A MEMBER OF THE LATERAL LOAD RESISTANCE SYSTEM
- 24KOWJ — DENOTES OPEN WEB STEEL JOIST (24=DEPTH BY 5JJ; K=SERIES/ AS DESIGNATED BY SJI. SEE 2/S705 FOR OWJ NOTES AND LOADING INFORMATION.
- (XX/XX) — DENOTES UNFACTORED UNIFORMLY DISTRIBUTED DEAD LOAD/SNOW LOAD IN POUNDS PER LINEAR FOOT (PLF)
- DENOTES ELEVATION STEP
- P_{AXIAL}=66k — DENOTES STRENGTH LEVEL OWJ DESIGN AXIAL FORCE (WIND/SEISMIC). SEE NOTE 4 IN DETAIL 2/S705 FOR TYPICAL OWJ AXIAL LOAD WHEN NOT NOTED ON PLAN.

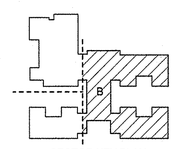

SECTOR KEY PLAN

PIVOT ARCHITECTURE

STRUCTURAL REGISTERED PROFESSIONAL ENGINEER 65387PE OREGON JAN 23, 2020 TODD M. BOARDER

Expires: 12-31-15

IBI GROUP

Iowa

HOHBACH-LEWIN, INC. STRUCTURAL ENGINEERS 2155 W. 13TH AVENUE Eugene, OR 97402 (541) 342-7702 Fax (541) 343-1702

HOWARD RECONCILED SET

EUGENE SCHOOL DISTRICT 4J
700 HOWARD AVE, EUGENE, OREGON 97404

HOWARD ELEMENTARY SCHOOL

SECTOR B - MECHANICAL PLATFORM/ LOW ROOF FRAMING PLANS

PROJECT #:	1330
ISSUE DATE:	10/28/2014
DRAWN:	JR
CHECKED:	VHB

REVISIONS:

S132

© 2014 PIVOT ARCHITECTURE

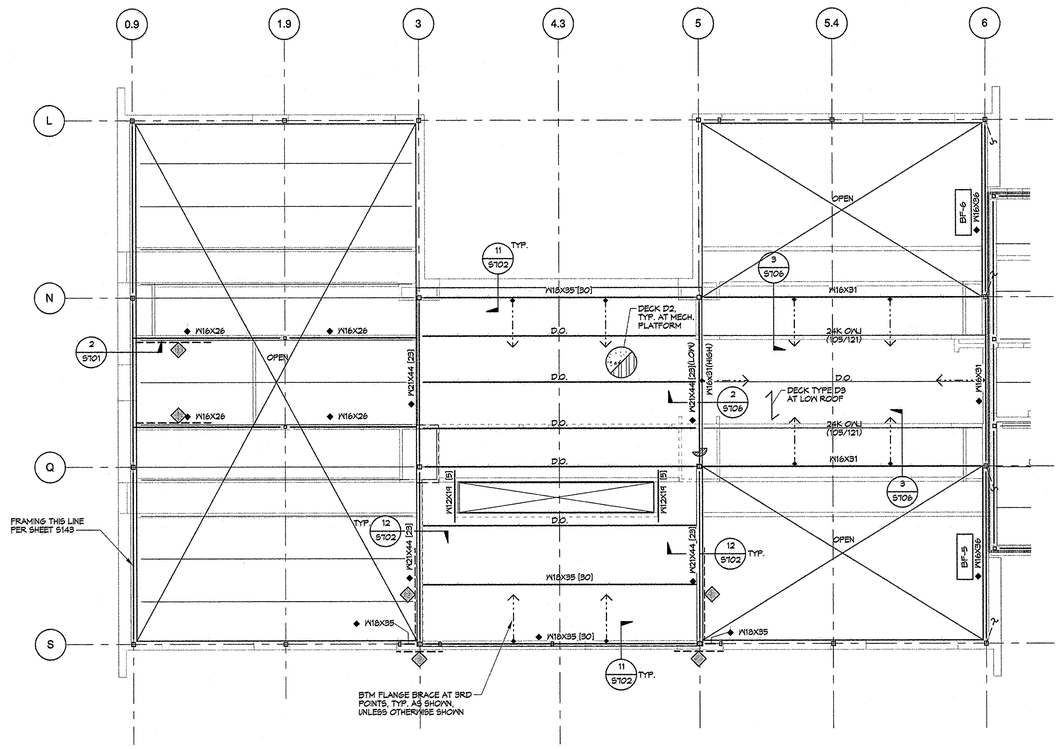

SECTOR C - MECHANICAL PLATFORM/ LOW ROOF FRAMING PLAN

1/8" = 1'-0"

MECHANICAL PLATFORM NOTES

1. SEE S001 FOR GENERAL STRUCTURAL NOTES AND SYMBOLS.
2. T.O. CONCRETE = 26'-0" U.O.N.
3. T.O. STEEL = BOTTOM OF METAL DECK ELEVATION = +25'-8" TYPICAL U.O.N. ON PLAN.
4. FLOOR BEAMS ARE EQUALLY SPACED BETWEEN GRIDS UNLESS OTHERWISE NOTED.
5. SEE ARCH DRAWINGS FOR ALL FLOOR OPENINGS, INCLUDING STAIRS AND ELEVATOR.
6. SEE DETAILS 1&2/S101 FOR TYPICAL WF BEAM TO WF BEAM CONNECTION.
7. SEE DETAIL 5/S101 FOR TYPICAL WF BEAM TO HSS COLUMN CONNECTION.
8. SEE 1/S102 FOR STEEL FLOOR DECK ATTACHMENT.
9. SEE SHEETS S101 AND S102 FOR TYPICAL STEEL DETAILS NOT NOTED.

MECHANICAL PLATFORM SYMBOLS

- NON-STRUCTURAL WALLS BELOW FLOOR
- NON-STRUCTURAL WALLS ABOVE FLOOR
- FIRE-TREATED PLYWOOD SHEATHED LIGHT GAUGE METAL STUD SHEARWALL BELOW THIS LEVEL, SEE SCHEDULE, DETAIL 1/S902
- DENOTES BEAM BOTTOM FLANGE BRACING PER DETAIL 8/S102
- DENOTES CONCRETE FILL O/ METAL DECK PER SCHEDULE, DETAIL 1/S102
- [X] DENOTES NUMBER OF SHEAR STUDS, SEE DETAIL 4/S102

ROOF FRAMING PLAN NOTES

1. SEE SHEET S001 FOR GENERAL STRUCTURAL NOTES AND SYMBOLS.
2. SEE ARCHITECTURAL DRAWINGS FOR T.O. STEEL, ELEVATIONS NOT NOTED, ROOF SLOPES, ETC.
3. JOISTS ARE EQUALLY SPACED BETWEEN GRID LINES U.O.N.
4. SEE 1/S102 FOR ROOF DECK ATTACHMENT.
5. STEEL DETAILS 13&14/S102 FOR FRAMING AT DECK OPENINGS FOR SKYLIGHTS.
6. SEE DETAILS 1&2/S101 FOR TYPICAL WF BEAM TO WF BEAM CONNECTION.
7. SEE DETAIL 5/S101 FOR TYPICAL WF BEAM TO HSS COLUMN CONNECTION.
8. SEE SHEETS S101 AND S102 FOR TYPICAL STEEL DETAILS NOT NOTED.

ROOF FRAMING PLAN SYMBOLS

- DENOTES WALL BELOW ROOF
- DX DENOTES DIRECTION OF METAL ROOF DECK SPAN AND DECK TYPE, SEE 1/S102
- O/W/J DENOTES OPEN WEB STEEL JOIST
- DENOTES BEAM BOTTOM FLANGE BRACING PER DETAIL 8/S102
- ◆ DENOTES A MEMBER OF THE LATERAL LOAD RESISTANCE SYSTEM
- 24K O/W/J DENOTES OPEN WEB STEEL JOIST (24-DEPTH BY S.J.); "K"="SERIES" AS DESIGNATED BY S.J. SEE 2/S105 FOR O/W/J NOTES AND LOADING INFORMATION.
- (XX/XX) DENOTES UNFACTORED UNIFORMLY DISTRIBUTED DEAD LOAD/SNOW LOAD IN POUNDS PER LINEAR FOOT (PLF)
- DENOTES ELEVATION STEP
- F_{AXIAL} =66K DENOTES STRENGTH LEVEL O/W/J DESIGN AXIAL FORCE (WIND/SEISMIC). SEE NOTE 4 IN DETAIL 2/S105 FOR TYPICAL O/W/J AXIAL LOAD WHEN NOT NOTED ON PLAN.

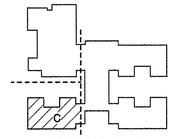

SECTOR KEY PLAN

PIVOT ARCHITECTURE

STRUCTURAL REGISTERED PROFESSIONAL ENGINEER 65387PE OREGON JAN. 22, 2014 VICKI L. BOURCIER Expires: 12-31-15

IBI GROUP

dowa

HOHBACH-LEWIN, INC. STRUCTURAL ENGINEERS
Sue Ann Staats Arch.
2700 Gateway Oaks Dr. Suite 300
Sacramento, CA 95833
(916) 929-1481 Fax (916) 929-1883

HOWARD RECONCILED SET
EUGENE SCHOOL DISTRICT 4J
700 HOWARD AVE. EUGENE, OREGON 97404
HOWARD ELEMENTARY SCHOOL

SECTOR C - MECHANICAL PLATFORM/ LOW ROOF FRAMING PLAN

PROJECT #:	1336
ISSUE DATE:	10/28/2014
DRAWN:	JPA
CHECKED:	VLB

REVISIONS:

S133

© 2014 PIVOT ARCHITECTURE

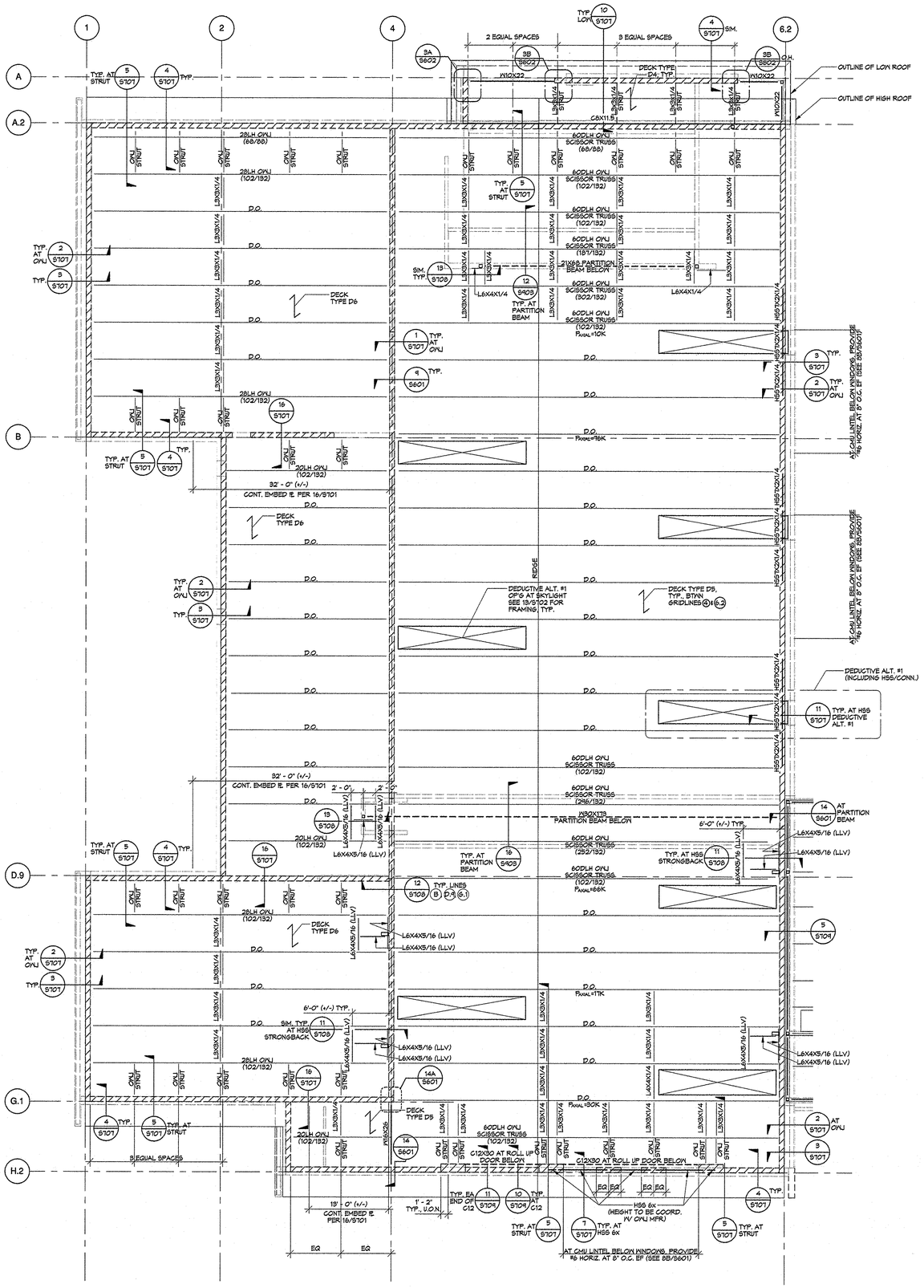

SECTOR A ROOF FRAMING

1/8" = 1'-0"

ROOF FRAMING PLAN NOTES

1. SEE SHEET S001 FOR GENERAL STRUCTURAL NOTES AND SYMBOLS.
2. SEE ARCHITECTURAL DRAWINGS FOR T.O. STEEL, ELEVATIONS NOT NOTED, ROOF SLOPES, ETC.
3. JOISTS ARE EQUALLY SPACED BETWEEN GRID LINES U.O.N.
4. SEE 1/S102 FOR ROOF DECK ATTACHMENT.
5. STEEL DETAILS 13&14/S102 FOR FRAMING AT DECK OPENINGS FOR SKYLIGHTS.

ROOF FRAMING PLAN SYMBOLS

	DENOTES NON-STRUCTURAL WALL BELOW ROOF
	DENOTES CMU WALL BELOW ROOF
DX	DENOTES DIRECTION OF METAL ROOF DECK SPAN AND DECK TYPE. SEE 1/S102
24K O/U	DENOTES OPEN WEB STEEL JOIST (24=DEPTH BY SJI); "LH" OR "DHL" = "SERIES" AS DESIGNATED BY SJI. SEE 2/S105 FOR O/U NOTES AND LOADING INFORMATION. SEE 4/S105 FOR SCISSOR TRUSS PROFILE AT GYM/CAFETERIA
(XX/XX)	DENOTES UNFACTORED UNIFORMLY DISTRIBUTED DEAD LOAD/SNOW LOAD IN POUNDS PER LINEAR FOOT (PLF)
P_{AXIAL}=66k	DENOTES STRENGTH LEVEL O/U DESIGN AXIAL FORCE (WIND/SEISMIC). SEE NOTE 9 IN DETAIL 2/S105 FOR TYPICAL O/U AXIAL LOAD WHEN NOT NOTED ON PLAN.

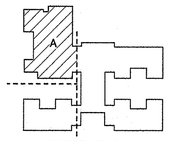

SECTOR KEY PLAN

PIVOT ARCHITECTURE

STRUCTURAL REGISTERED PROFESSIONAL ENGINEER 65387PE OREGON JAN. 23, 2013 VICKI H. BOURCIER Expires: 12-31-15

IBI GROUP

dowa

HOHBACH-LEWIN, INC. STRUCTURAL ENGINEERS 2155 Chain Lake Drive, Suite 202 Eugene, OR 97401 (541) 349-1700 Fax (541) 349-1701

HOWARD RECONCILED SET

EUGENE SCHOOL DISTRICT 4J
700 WILLAMETTE STREET, EUGENE, OREGON 97401

HOWARD ELEMENTARY SCHOOL

SECTOR A - ROOF FRAMING PLAN

PROJECT #:	1338
ISSUE DATE:	10/29/2014
DRAWN:	JPA
CHECKED:	VHB
REVISIONS:	

S141

© 2014 PIVOT ARCHITECTURE

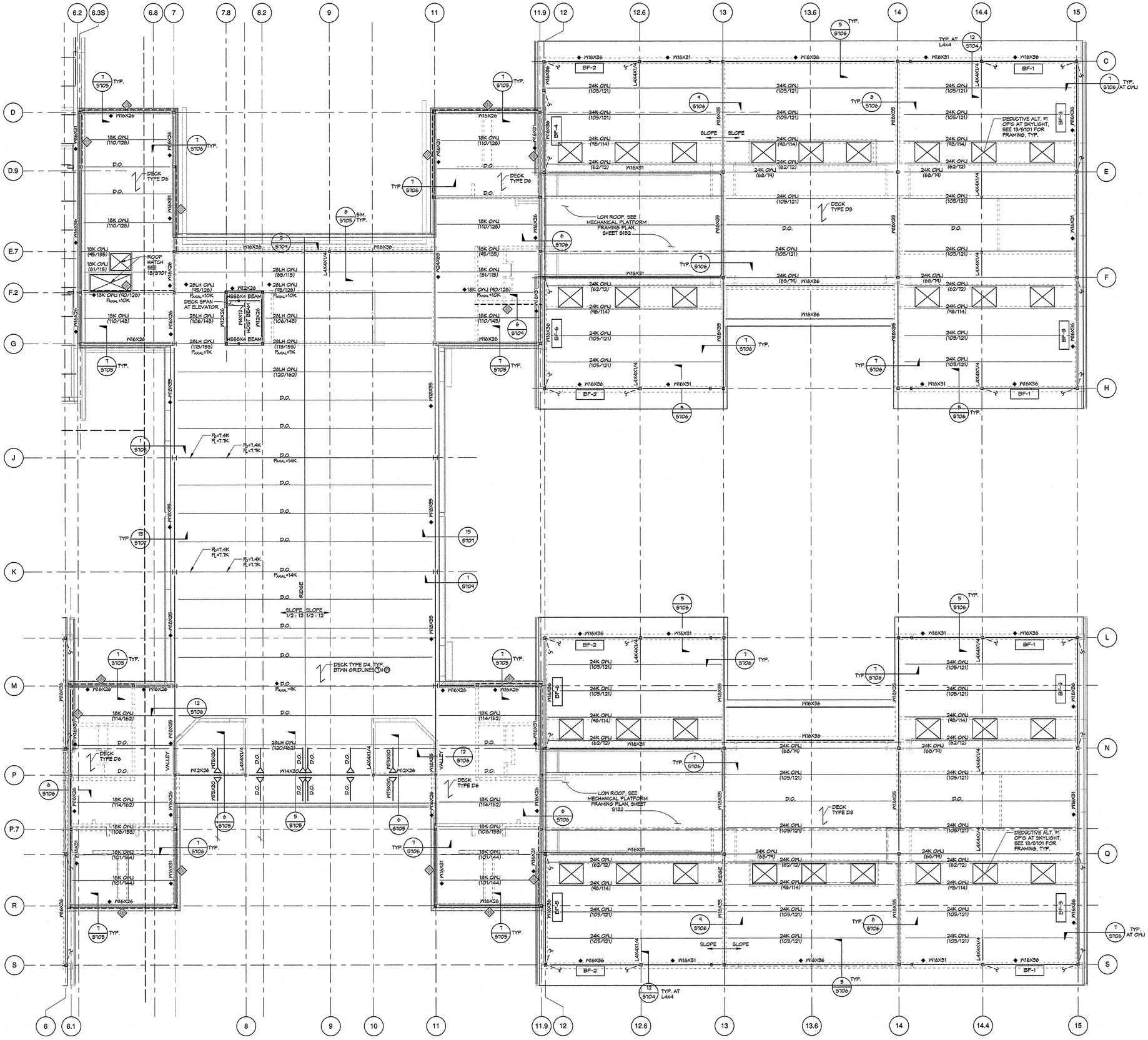

SECTOR B ROOF FRAMING

1/8" = 1'-0"

ROOF FRAMING NOTES

1. SEE SHEET S001 FOR GENERAL STRUCTURAL NOTES AND SYMBOLS.
2. SEE ARCHITECTURAL DRAWINGS FOR T.O. STEEL, ELEVATIONS NOT NOTED, ROOF SLOPES, ETC.
3. JOISTS ARE EQUALLY SPACED BETWEEN GRID LINES U.O.N.
4. SEE 1/S102 FOR ROOF DECK ATTACHMENT.
5. STEEL DETAILS 19/14/S102 FOR FRAMING AT DECK OPENINGS FOR SKYLIGHTS.
6. SEE DETAILS 14/S101 FOR TYPICAL WF BEAM TO WF BEAM CONNECTION.
7. SEE DETAIL 5/S101 FOR TYPICAL WF BEAM TO HSS COLUMN CONNECTION.
8. SEE SHEETS S101 AND S102 FOR TYPICAL STEEL DETAILS NOT NOTED.
9. ALL ROOF BEAMS REQUIRE BOTTOM FLANGE BRACING AT 12'-0" O.C., MAX; SEE DETAIL 8/S102.

ROOF FRAMING SYMBOLS

	DENOTES WALL BELOW ROOF
	FIRE-TREATED PLYWOOD SHEATHED LIGHT GAUGE METAL STUD SHEARWALL BELOW THIS LEVEL, SEE SCHEDULE, DETAIL 1/S402
DX	DENOTES DIRECTION OF METAL ROOF DECK SPAN AND DECK TYPE, SEE 1/S102
◆	DENOTES A MEMBER OF THE LATERAL LOAD RESISTANCE SYSTEM
24KOYJ	DENOTES OPEN WEB STEEL JOIST (24=DEPTH BY SJI); "K" OR "LH" = "SERIES" AS DESIGNATED BY SJI. SEE 2/S705 FOR OYJ NOTES AND LOADING INFORMATION. SEE 3/S705 FOR TRUSS PROFILE AT MEDIA CENTER.
(XX/XX)	DENOTES UNFACTORED UNIFORMLY DISTRIBUTED DEAD LOAD/SNOW LOAD IN POUNDS PER LINEAR FOOT (PLF)
P_D=7.4K P_L=7.4K	DENOTES VERTICAL POINT LOADS HUNG FROM BOTTOM CHORD OF TRUSS, SEE 3/S705
P_{AXIAL}=66K	DENOTES STRENGTH LEVEL OYJ DESIGN AXIAL FORCE (WIND/SEISMIC). SEE NOTE 9 IN DETAIL 2/S705 FOR TYPICAL OYJ AXIAL LOAD WHEN NOT NOTED ON PLAN.
—//—	DENOTES BENT BEAM SEE 2/S709

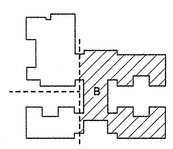

SECTOR KEY PLAN

PIVOT ARCHITECTURE

STRUCTURAL REGISTERED PROFESSIONAL ENGINEER 66397PE OREGON MAY 23, 2001 VIKKI L. BOURCIER Expires: 12-31-15

IBI GROUP

dowa

HOHBACH-LEWIN INC. STRUCTURAL ENGINEERS
208 East 5th Ave. Eugene, OR 97401 (541) 345-1701 Fax (541) 345-1702
SINCE 1952

HOWARD RECONCILED SET
EUGENE SCHOOL DISTRICT
700 HOWARD AVE. EUGENE, OREGON 97404
HOWARD ELEMENTARY SCHOOL

SECTOR B - ROOF FRAMING PLAN

PROJECT #:	1326
ISSUE DATE:	12/23/2014
DRAWN:	JPA
CHECKED:	VLB
REVISIONS:	

S142

© 2014 PIVOT ARCHITECTURE

ROOF FRAMING PLAN NOTES

1. SEE SHEET S001 FOR GENERAL STRUCTURAL NOTES AND SYMBOLS.
2. SEE ARCHITECTURAL DRAWINGS FOR T.O. STEEL, ELEVATIONS NOT NOTED, ROOF SLOPES, ETC.
3. JOISTS ARE EQUALLY SPACED BETWEEN GRID LINES U.O.N.
4. SEE 1/S702 FOR ROOF DECK ATTACHMENT.
5. STEEL DETAILS 19/14/S702 FOR FRAMING AT DECK OPENINGS FOR SKYLIGHTS.
6. SEE DETAILS 1/2/S701 FOR TYPICAL WF BEAM TO WF BEAM CONNECTION.
7. SEE DETAIL 5/S701 FOR TYPICAL WF BEAM TO HSS COLUMN CONNECTION.
8. SEE SHEETS S701 AND S702 FOR TYPICAL STEEL DETAILS NOT NOTED.
9. ALL ROOF BEAMS REQUIRE BOTTOM FLANGE BRACING AT 12'-0" O.C., MAX; SEE DETAIL 8/S702.

ROOF FRAMING PLAN SYMBOLS

	DENOTES WALL BELOW ROOF
DX	DENOTES DIRECTION OF METAL ROOF DECK SPAN AND DECK TYPE, SEE 1/S702
◆	DENOTES A MEMBER OF THE LATERAL LOAD RESISTANCE SYSTEM
24K OWJ	DENOTES OPEN WEB STEEL JOIST (24=DEPTH BY SJI); "K"=SERIES" AS DESIGNATED BY SJI. SEE 2/S703 FOR OWJ NOTES AND LOADING INFORMATION.
(XX/XX)	DENOTES UNFACTORED UNIFORMLY DISTRIBUTED DEAD LOAD/LIVE LOAD IN POUNDS PER LINEAR FOOT (PLF)

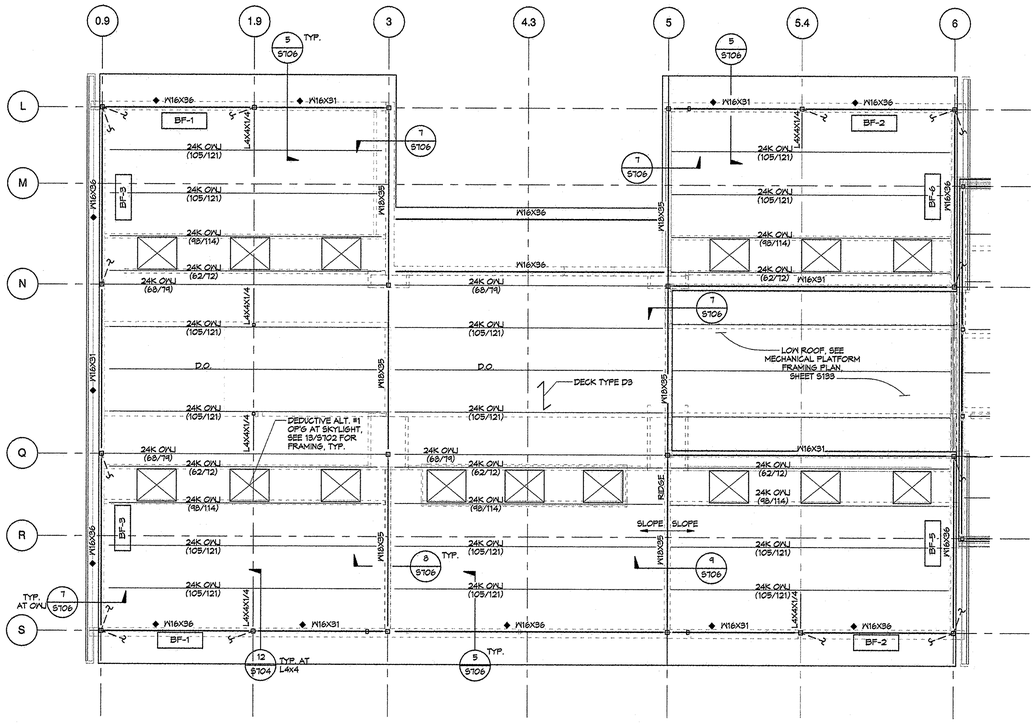

SECTOR C - ROOF FRAMING

1/8" = 1'-0"

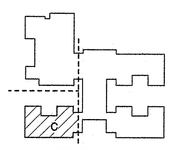

SECTOR KEY PLAN

PIVOT ARCHITECTURE

STRUCTURAL REGISTERED PROFESSIONAL ENGINEER 65387PE OREGON JANUARY 23, 2009 VIKRAM R. BOURGHEER

Expires: 12-31-15

IBI GROUP

HOHBACH-LEWIN, INC. STRUCTURAL ENGINEERS 2155 W. 11th Avenue Eugene, OR 97402 (541) 342-5750 Fax (541) 342-1702

HOWARD RECONCILED SET

EUGENE SCHOOL DISTRICT
700 HOWARD AVE, EUGENE, OREGON 97404

HOWARD ELEMENTARY SCHOOL

SECTOR C - ROOF FRAMING PLAN

PROJECT #:	1330
ISSUE DATE:	10/28/2014
DRAWN:	JPA
CHECKED:	VRB

REVISIONS:

S143

© 2014 PIVOT ARCHITECTURE

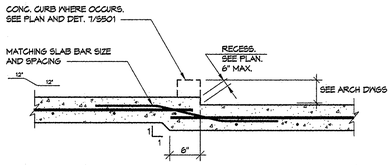

13A

1"=1'-0"

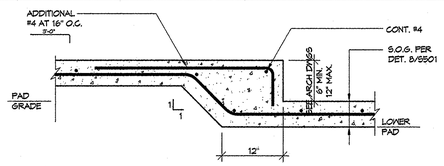

13B TYPICAL SLAB-ON-GRADE STEP

1"=1'-0"

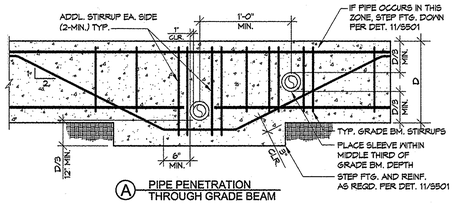

A PIPE PENETRATION THROUGH GRADE BEAM

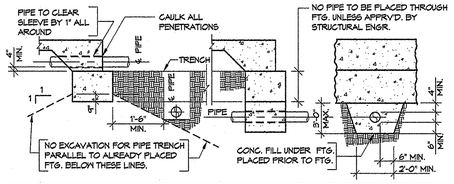

9 TYPICAL PIPE PENETRATION UNDER FOOTING AND TRENCH LIMITATIONS

N.T.S.

NOTES:

1. AT CONTRACTOR'S OPTION USE EITHER SAWCUT OR PLASTIC STRIP CONTROL JOINTS.
2. AT CONTRACTOR'S OPTION USE EITHER SAWCUT OR PLASTIC STRIP CONTROL JOINTS.

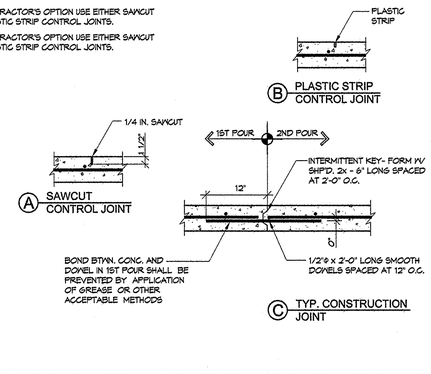

5 TYPICAL CONSTRUCTION AND CONTROL JOINTS AT SLAB-ON-GRADE

1"=1'-0"

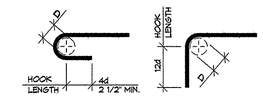

NOTE:

d = BAR DIAMETER
D = MINIMUM DIAMETER OF BEND
D = 8d FOR #3 THROUGH #8
D = 8d FOR #9 THROUGH #11

BAR SIZE	STANDARD HOOK		
	D (IN.)	HOOK LENGTH (IN.)	
		90°	180°
#3	2 1/4	4 1/2	2 1/2
#4	3	6	2 1/2
#5	3 3/4	7 1/2	2 1/2
#6	4 1/2	9	3
#7	5 1/4	10 1/2	3 1/2
#8	6	12	4
#9	9	13 1/2	4 1/2

1A STANDARD REINFORCING STEEL HOOKS

N.T.S.

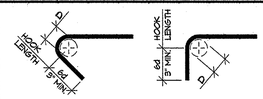

BAR SIZE	STIRUP & TIE HOOK		
	D (IN.)	HOOK LENGTH (IN.)	
		90°	135°
#3	1 1/2	3	3
#4	2	3	3
#5	2 1/2	4	4

1 TYPICAL STIRRUP AND TIE HOOKS

N.T.S.

NOTE:

1. GC TO COORDINATE BLOCKOUT W/ ARCH FINISH

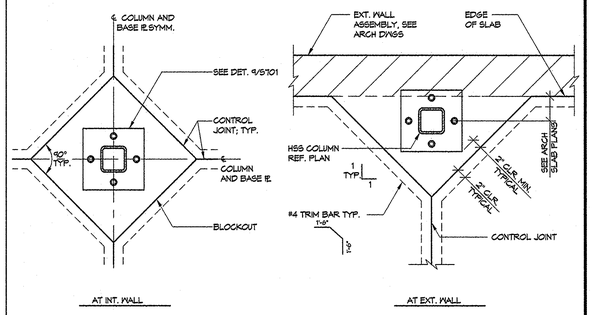

14 TYPICAL COLUMN BLOCKOUT

1"=1'-0"

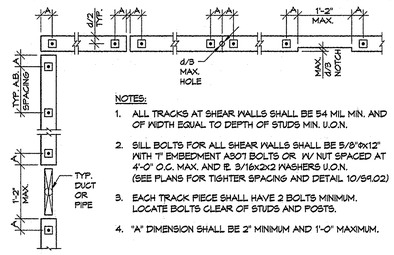

NOTES:

1. ALL TRACKS AT SHEAR WALLS SHALL BE 54 MIL MIN. AND OF WIDTH EQUAL TO DEPTH OF STUDS MIN. U.O.N.
2. SILL BOLTS FOR ALL SHEAR WALLS SHALL BE 5/8"Ø X 12" WITH 7" EMBEDMENT ABOT BOLTS OR W/ NUT SPACED AT 4'-0" O.C. MAX. AND ℄. 3/16x2x2 WASHERS U.O.N. (SEE PLANS FOR TIGHTER SPACING AND DETAIL 10/S9.02)
3. EACH TRACK PIECE SHALL HAVE 2 BOLTS MINIMUM. LOCATE BOLTS CLEAR OF STUDS AND POSTS.
4. "A" DIMENSION SHALL BE 2" MINIMUM AND 1'-0" MAXIMUM.

10 ANCHOR BOLT AND TRACK REQUIREMENTS

N.T.S.

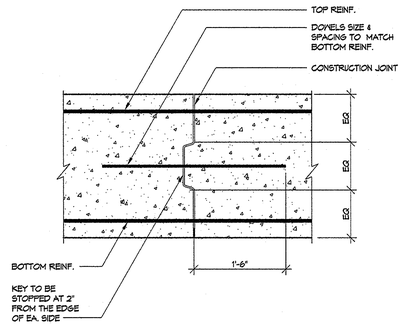

6 TYPICAL CONSTRUCTION JOINT AT FOUNDATION

1"=1'-0"

TOP BARS - 90° HOOK EMBEDMENT AND CLASS B TENSION LAP SPLICE FOR GRADE 60 REINF.

F'c	2,500 PSI		3,000 PSI		4,000 PSI		5,000 PSI	
BAR SIZE	EMBED. (IN)	CLASS B (IN)	EMBED. (IN)	CLASS B (IN)	EMBED. (IN)	CLASS B (IN)	EMBED. (IN)	CLASS B (IN)
#3	9	31	9	28	8	25	7	22
#4	12	41	11	38	10	33	9	29
#5	15	51	14	47	12	41	11	36
#6	18	61	17	56	15	49	13	44
#7	21	89	20	81	17	71	15	63
#8	24	102	22	93	19	81	17	72
#9	27	115	25	105	22	91	20	81

OTHER BARS - 90 ° HOOK EMBEDMENT AND CLASS B TENSION LAP SPLICE FOR GRADE 60 REINF.

F'c	2,500 PSI		3,000 PSI		4,000 PSI		5,000 PSI	
BAR SIZE	EMBED. (IN)	CLASS B (IN)	EMBED. (IN)	CLASS B (IN)	EMBED. (IN)	CLASS B (IN)	EMBED. (IN)	CLASS B (IN)
#3	9	24	9	22	8	19	7	17
#4	12	32	11	29	10	25	9	23
#5	15	39	14	36	12	31	11	28
#6	18	47	17	43	15	37	13	34
#7	21	69	20	63	17	54	15	49
#8	24	78	22	72	19	62	17	56
#9	27	88	25	81	22	70	20	63

NOTES:

1. TOP BARS = HORIZONTAL BARS (OTHER THAN IN WALLS) PLACED WITH MORE THAN 12" OF FRESH CONCRETE IS CAST BELOW THEM. SEE DET. 3/S501
2. ABOVE TABLES ARE BASED UPON MINIMUM CLEAR COVER GREATER THAN 1.0db AND MINIMUM CLEAR SPACING GREATER THAN 2db. WHERE EITHER OF THESE REQUIREMENTS IS NOT MET, INCREASE THE EMBEDMENT OR LAP LENGTH BY 50%.
3. USE CLASS B LAP SPLICE FOR ALL BAR SPLICES TYP.
4. FOR ADDITIONAL INFORMATION SEE DET. 3/S501

2 TYPICAL REINFORCEMENT EMBED AND LAP SPLICE

N.T.S.

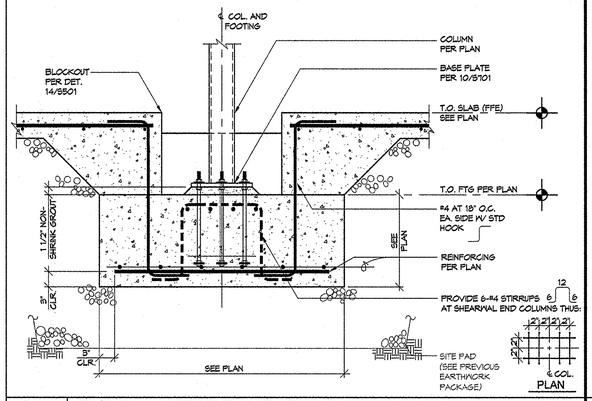

15 TYPICAL INTERIOR ISOLATED SPREAD FOOTING

1"=1'-0"

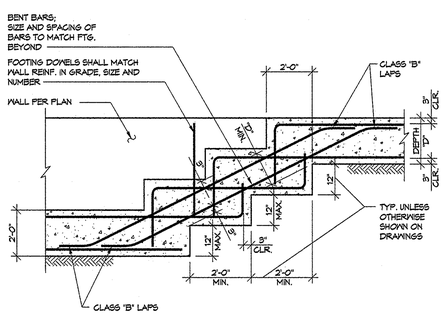

11 TYPICAL STEP IN CONTINUOUS FOOTING

N.T.S.

7 TYPICAL CURB AND RAISED PAD DETAILS

N.T.S.

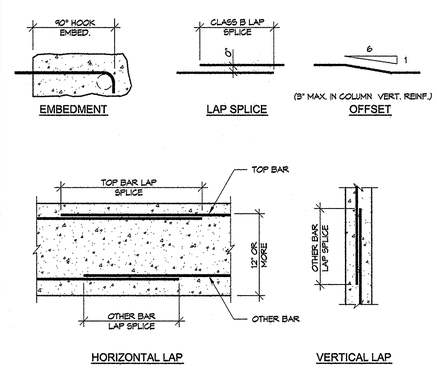

3 TYPICAL REINFORCEMENT EMBED, LAP SPLICE AND OFFSET

1"=1'-0"

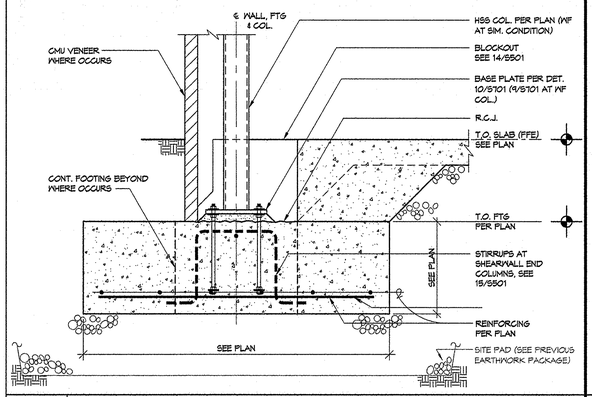

16 COLUMN FOOTING AT EXTERIOR WALL

1"=1'-0"

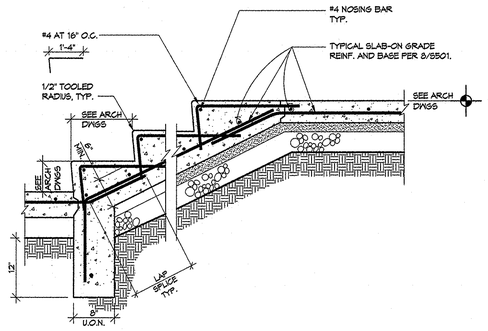

12 CONCRETE STEPS

1"=1'-0"

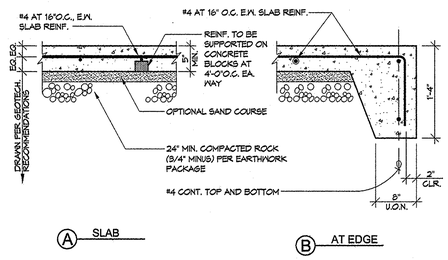

8 SLAB-ON-GRADE

1"=1'-0"

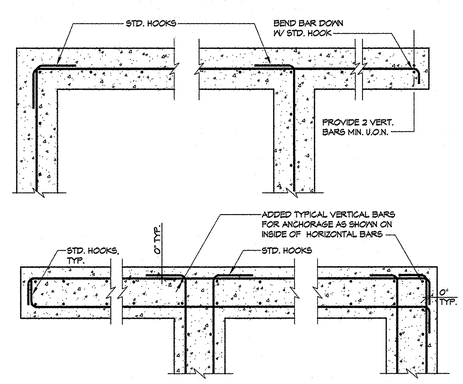

4 TYPICAL CONCRETE MEMBER INTERSECTIONS

1"=1'-0"

PIVOT ARCHITECTURE

STRUCTURAL REGISTERED PROFESSIONAL ENGINEER 65387PE OREGON JAN 29, 2014 VIVEK N. BOURNE Expires: 12-31-15

IBI GROUP

Iowa

HOHBACH-LEWIN, INC. STRUCTURAL ENGINEERS 888 SW 5th Avenue, Suite 302 Portland, OR 97204 (541) 349-1701, Fax (541) 349-1702

HOWARD RECONCILED SET

4J EUGENE SCHOOL DISTRICT 200 HOWARD AVE, EUGENE, OREGON 97404

HOWARD ELEMENTARY SCHOOL

TYPICAL CONCRETE DETAILS

PROJECT #:	13305
ISSUE DATE:	10/28/2014
DRAWN:	ABM
CHECKED:	VNB
REVISIONS:	

S501

H-L #9547.1

© 2014 PIVOT ARCHITECTURE

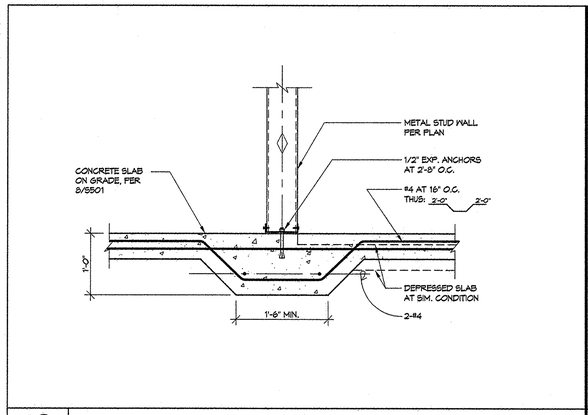

13 THICKENED SLAB AT PLATFORM CRIPPLE WALL

1"=1'-0"

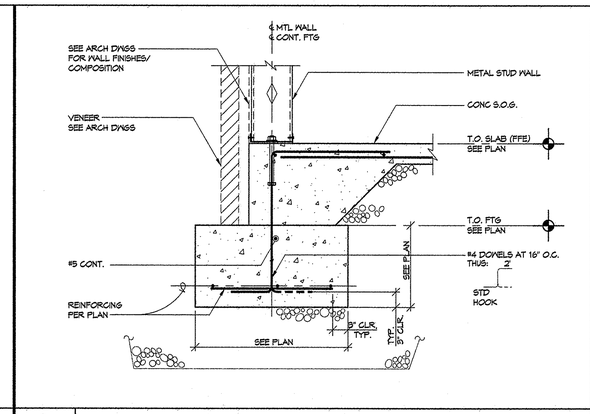

9 CONT FOOTING AT EXT. MTL STUD WALL

1"=1'-0"

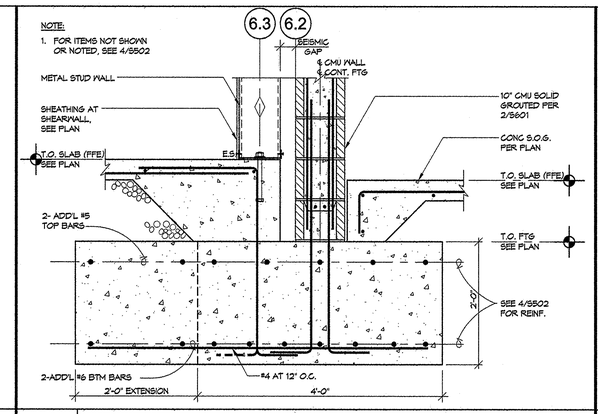

5 CONT. FOOTING AT EAST GYM WALL/ LOBBY

1"=1'-0"

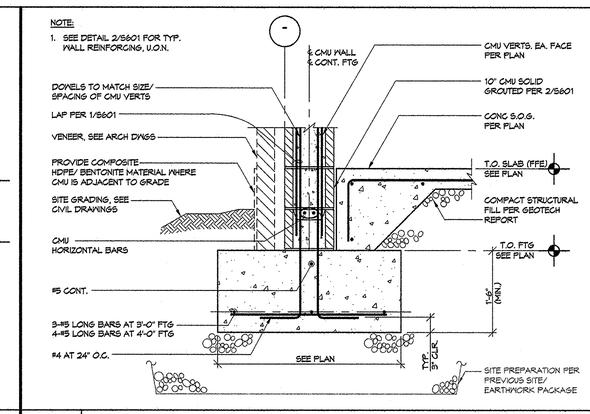

1 CONT FOOTING AT CMU WALLS

1"=1'-0"

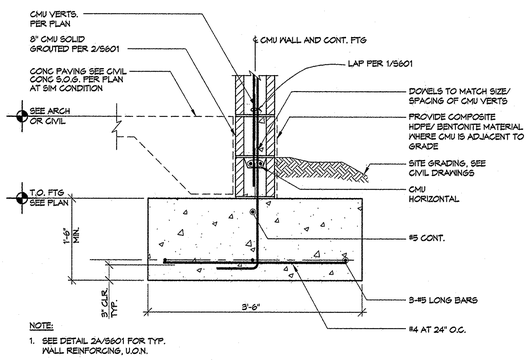

14 CONT FOOTING AT CMU SITE WALLS

1"=1'-0"

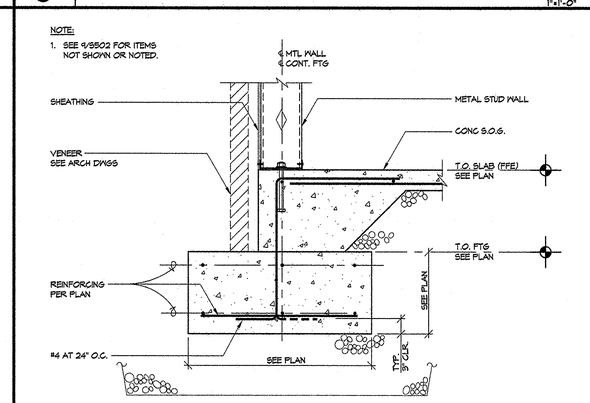

10 CONT FOOTING AT EXT. METAL SHEAR WALL

1"=1'-0"

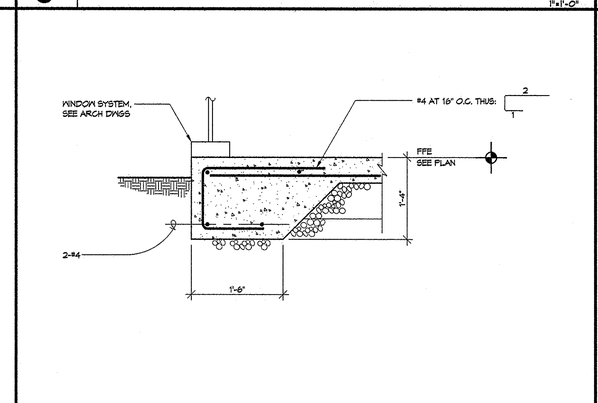

6 THICKENED SLAB EDGE AT WINDOW WALL

1"=1'-0"

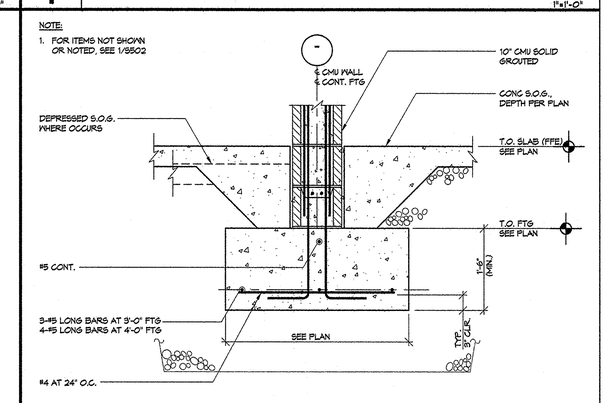

2 CONT FTG AT INTERIOR CMU WALLS

1"=1'-0"

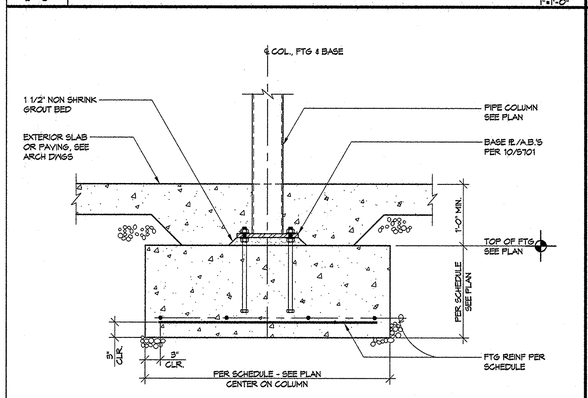

15 PIPE COLUMN FOOTING AT UTILITY COURT

1"=1'-0"

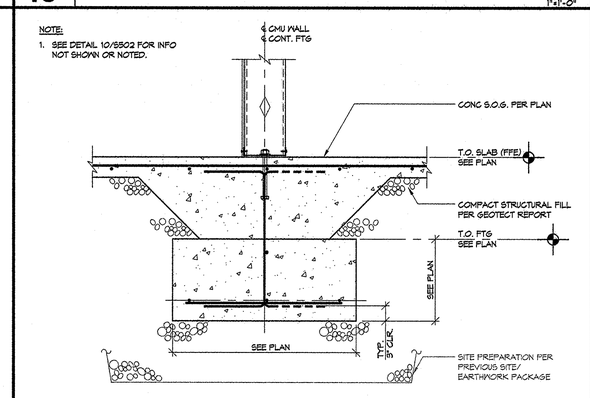

11 CONT FOOTING AT INT. METAL STUD SHEAR WALL

1"=1'-0"

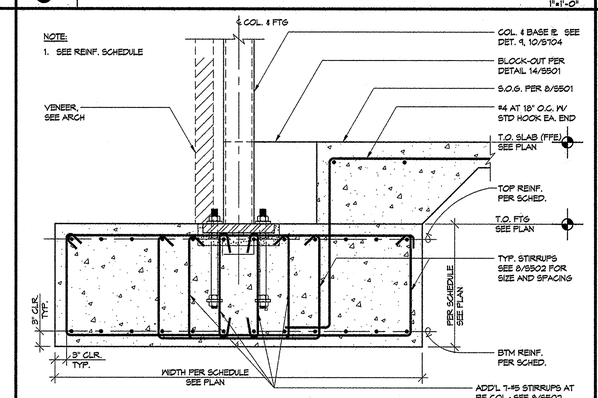

7 TYPICAL BRACED FRAME FOOTING

1"=1'-0"

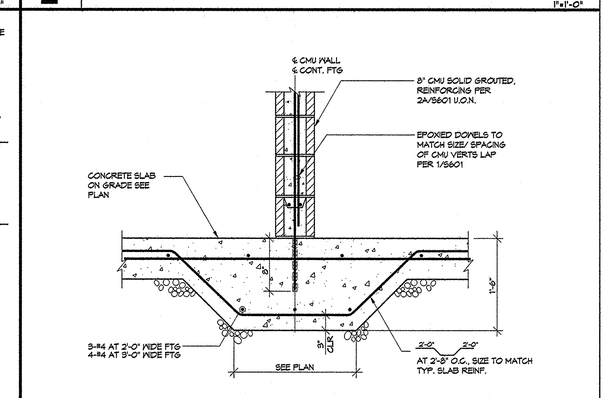

3 SECTION AT INTERIOR 8" CMU WALL

1"=1'-0"

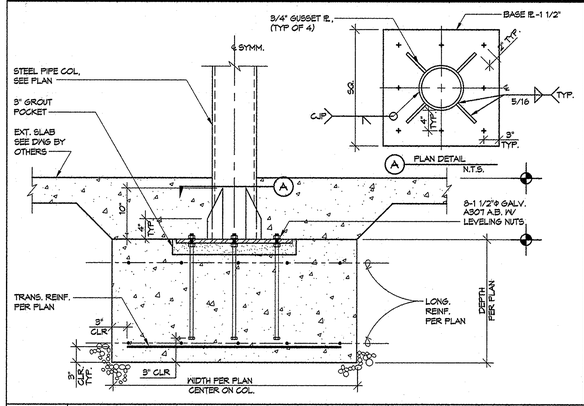

16 EXTERIOR PAD FOOTING AT ADMIN CANOPY COLUMNS

1"=1'-0"

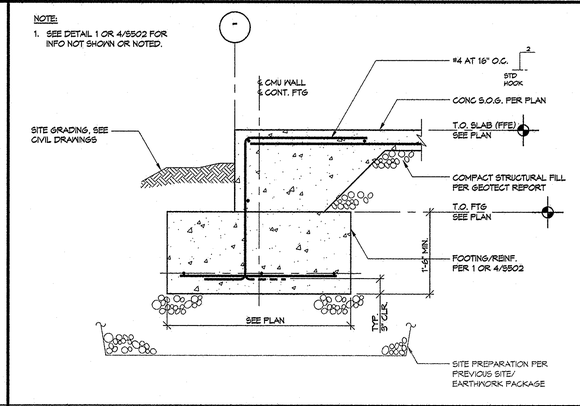

12 CONT FOOTING THRESHOLD - SECTOR A

1"=1'-0"

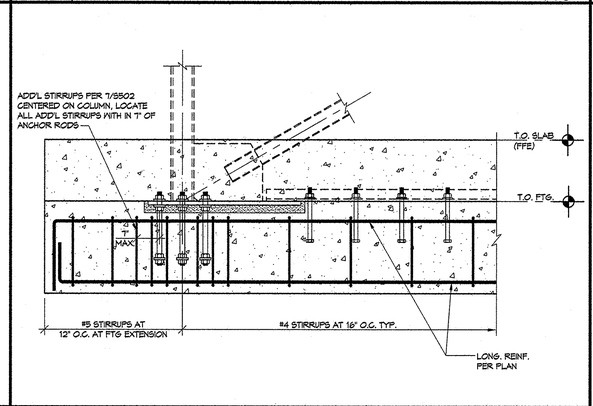

8 BRACED FAME FOOTING STIRRUPS

3/4"=1'-0"

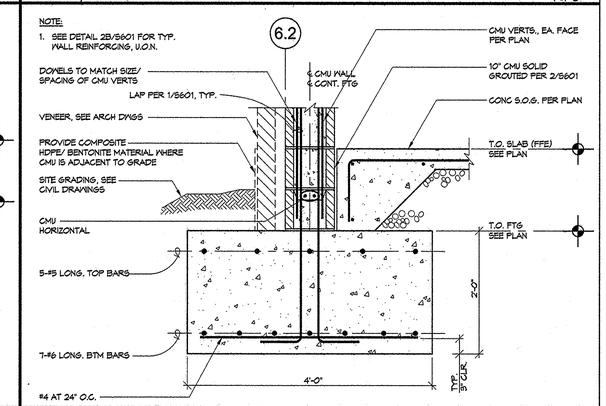

4 CONT FOOTING AT EAST GYM WALLS

1"=1'-0"

PIVOT ARCHITECTURE

STRUCTURAL REGISTERED PROFESSIONAL ENGINEER 65387PE OREGON JAN 23, 2014 VIVEK M. BOURNE Expires: 12-31-15

IBI GROUP

Iowa

HOHBACH-LEWIN, INC. STRUCTURAL ENGINEERS
256 East 8th Ave. Suite 302
Eugene, OR 97401
(541) 349-1701, Fax (541) 349-1702

HOWARD RECONCILED SET
EUGENE SCHOOL DISTRICT
700 HOWARD AVE, EUGENE, OREGON 97404
HOWARD ELEMENTARY SCHOOL

CONCRETE DETAILS

PROJECT #:	1326
ISSUE DATE:	10/02/2014
DRAWN:	AMA
CHECKED:	VMB

REVISIONS:

S502

H-L #9547.1

© 2014 PIVOT ARCHITECTURE

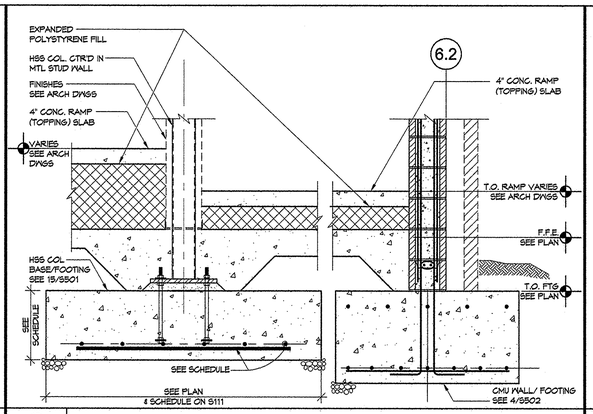

9 SECTION THRU PLATFORM RAMPS 3/4"=1'-0"

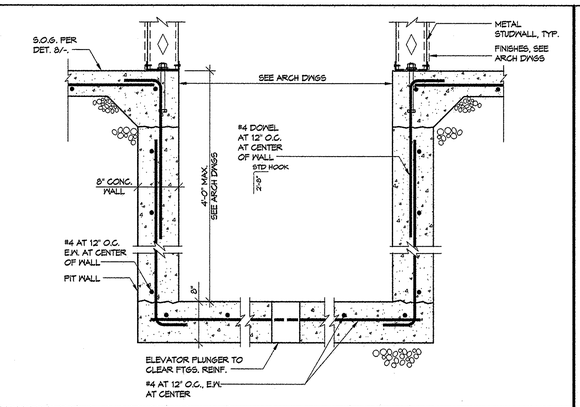

5 FOUNDATION AT ELEVATOR PIT 1"=1'-0"

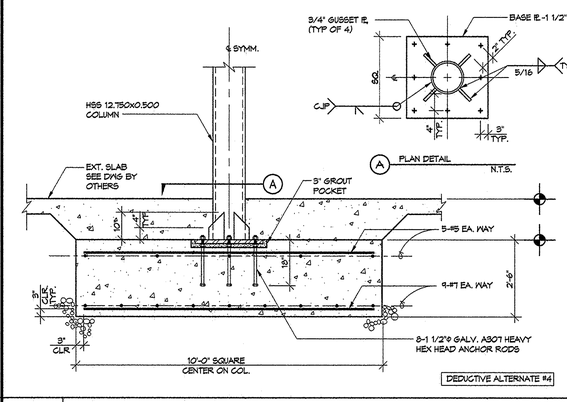

1 COLUMN PAD FOOTING AT COVERED PLAY STRUCTURE 1/2"=1'-0"

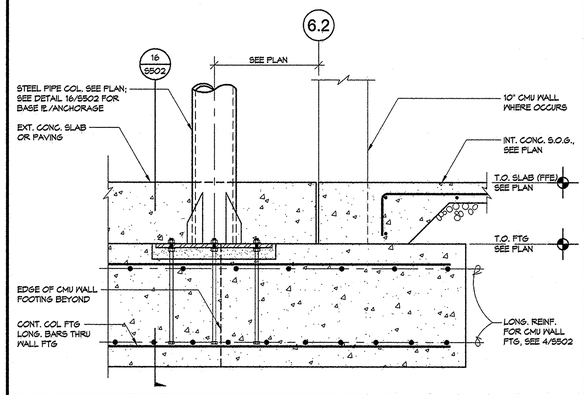

10 FOOTING AT EAST WALL OF GYM AT ADMIN CANOPY 1"=1'-0"

NOTE:
1. FOR INFO NOT SHOWN OR NOTED, SEE 1/S502

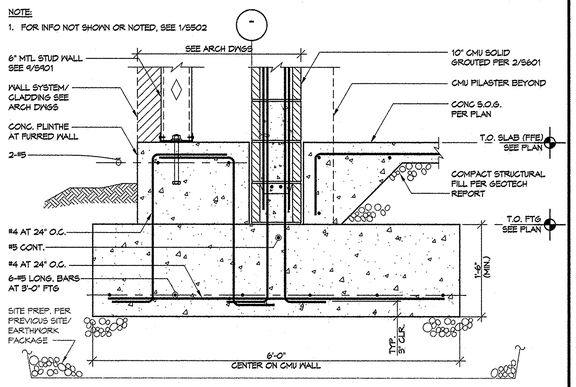

6 CONT. FOOTING AT WEST WALL OF MUSIC ROOM 1"=1'-0"

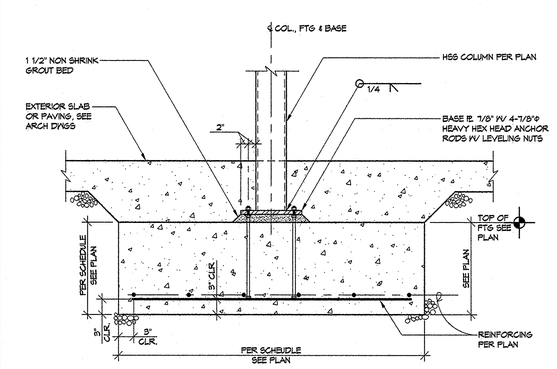

2 COLUMN PAD FOOTING AT BIKE STORAGE 1"=1'-0"

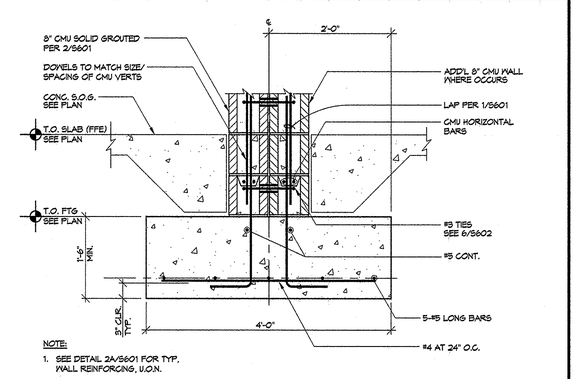

7 FOOTING AT CMU MEDIA CENTER WALLS 1"=1'-0"

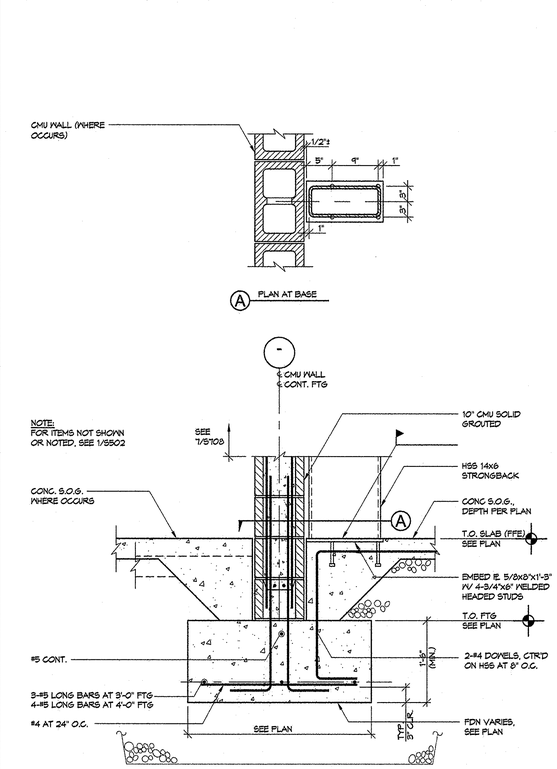

4 HSS STRONGBACK BASE CONNECTION 1"=1'-0"

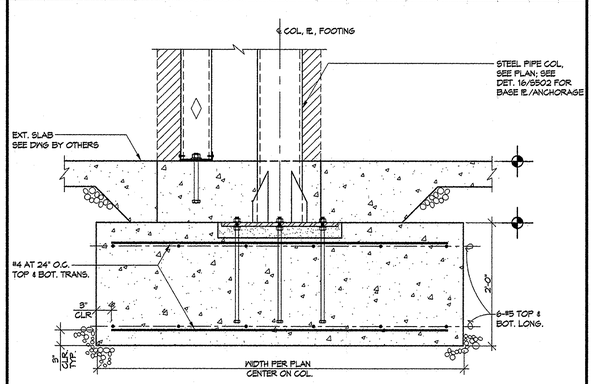

8 EXTERIOR PAD FOOTING AT ADMIN. CANOPY COLUMNS 1"=1'-0"

14 **15** **16** **11** **12**

PIVOT ARCHITECTURE

STRUCTURAL REGISTERED PROFESSIONAL ENGINEER 65387PE OREGON JAN 23, 2014 VIKRI N. BOURNER Expires: 12-31-15

IBI GROUP

Iowa

HOHBACH-LEWIN, INC. STRUCTURAL ENGINEERS
Eugene, Bend, Portland, Salem, OR 97401
(541) 349-1701, Fax (541) 349-1702

HOWARD RECONCILED SET
4J EUGENE SCHOOL DISTRICT
700 HOWARD AVE, EUGENE, OREGON 97404
HOWARD ELEMENTARY SCHOOL

CONCRETE DETAILS

PROJECT #:	1305
ISSUE DATE:	10/29/2014
DRAWN:	AMA
CHECKED:	VNB
REVISIONS:	

S503

H-L #9547.1

© 2014 PIVOT ARCHITECTURE

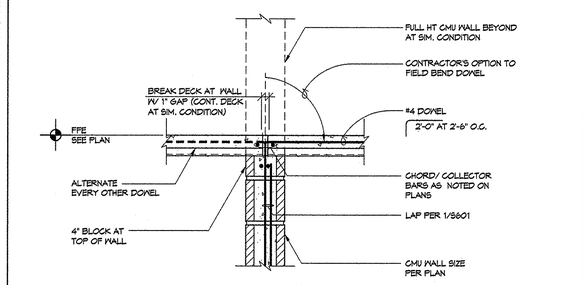

13 TYPICAL FLOOR DECK AT CMU WALL (LOAD BEARING)

1"=1'-0"

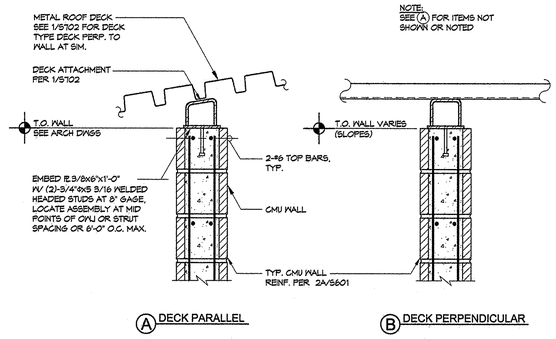

9 TYPICAL ROOF DECK EMBED AT CMU

1"=1'-0"

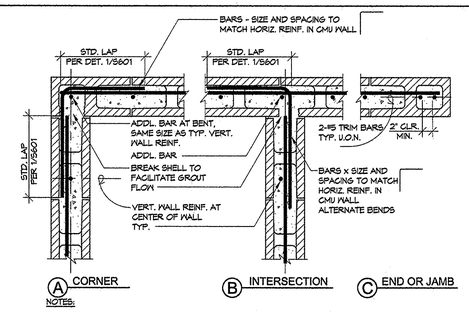

NOTES:

1. FOR REINF. REQUIREMENTS AT OPENINGS; CONTROL JOINTS, ETC, SEE DET 11/S601
2. USE DOUBLE OPEN END BLOCKS TYP. USE SINGLE OPEN END BLOCKS AT CORNERS, WALL ENDS, JAMBS OR AT SPLIT FACE CMU.
3. PROVIDE VERTICAL DOWELS INTO CONCRETE STEM WALLS OR FOOTINGS. DOWELS SIZE AND SPACING TO MATCH VERTICAL REINF. IN CMU WALL.
4. HORIZ. REINF. AT WALL ENDS OR WHICH DO NOT CONTINUE INTO INTERSECTING WALLS SHALL TERMINATE WITH STD. 90° HOOK TURNED DOWN

5 PLAN - TYPICAL CMU WALL WITH SINGLE CURTAIN REINFORCING

N.T.S.

BAR SIZE	MINIMUM LAP SPLICE	
	MIN. 2" COVER AND CLEAR SPACING	MIN. 3 1/2" COVER AND CLEAR SPACING
#3	15"	15"
#4	25"	20"
#5	34"	25"
#6	54"	42"
#7	63"	57"
#8	72"	72"
#9	81"	81"

NOTE: SPLICE LENGTHS BASED ON:

1. f'm=1500 psi OR GREATER
2. GRADE 60 REINFORCING
3. STRENGTH DESIGN REQUIREMENTS

1 TYPICAL CMU STANDARD REINFORCING STEEL LAP SPLICES

N.T.S.

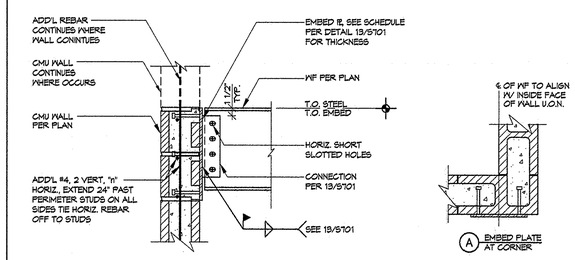

14 TYPICAL WF BEAM TO CMU WALL

1"=1'-0"

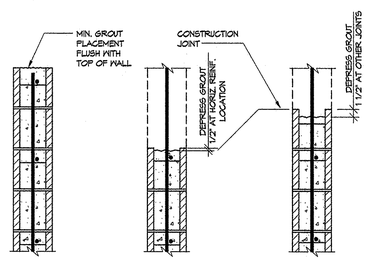

10 TYPICAL CMU GROUT CONSTRUCTION JOINTS

1"=1'-0"

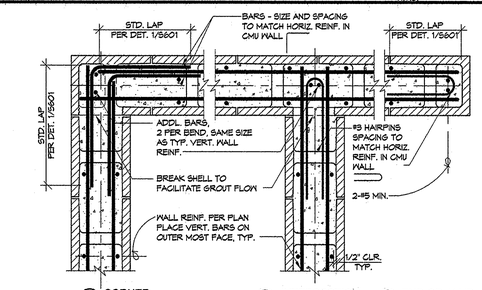

NOTES:

1. FOR REINF. REQUIREMENTS AT OPENINGS; CONTROL JOINTS, ETC, SEE DET 11/S601
2. USE DOUBLE OPEN END BLOCKS TYP. USE SINGLE OPEN END BLOCKS AT CORNERS, WALL ENDS, JAMBS OR AT SPLIT FACE CMU.
3. PROVIDE VERTICAL DOWELS INTO CONCRETE STEM WALLS OR FOOTINGS. DOWELS SIZE AND SPACING TO MATCH VERTICAL REINF. IN CMU WALL.
4. HORIZ. REINF. AT WALL ENDS OR WHICH DO NOT CONTINUE INTO INTERSECTING WALLS SHALL TERMINATE WITH STD. 90° HOOK TURNED DOWN

6 PLAN - TYPICAL CMU WALL WITH DOUBLE CURTAIN REINFORCING

N.T.S.

NOTES:

1. SEE ARCHITECTURAL DWG'S FOR TOP OF WALL ELEVATION, SIZE AND LOCATIONS OF OPENINGS, ETC.
2. WHERE DISTANCE BTWN. OPENINGS OR DISTANCE BETWEEN DOOR JAMB AND CONTROL JOINTS " W " IS 5'-0" OR LESS PROVIDE PIER REINF. PER DET. 7/S601
3. FOR ADDITIONAL REQUIREMENTS, SEE DET. 12/S601
4. FOR TYP. HORIZ. AND VERT. WALL REINF. (NOT SHOWN) SEE DET. 2/S601

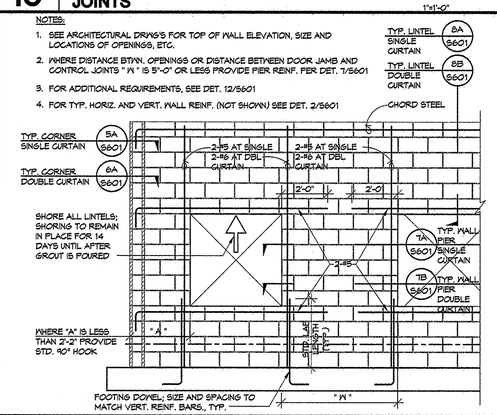

11 TYPICAL CMU WALL REINFORCING DETAILS

3/8"=1'-0"

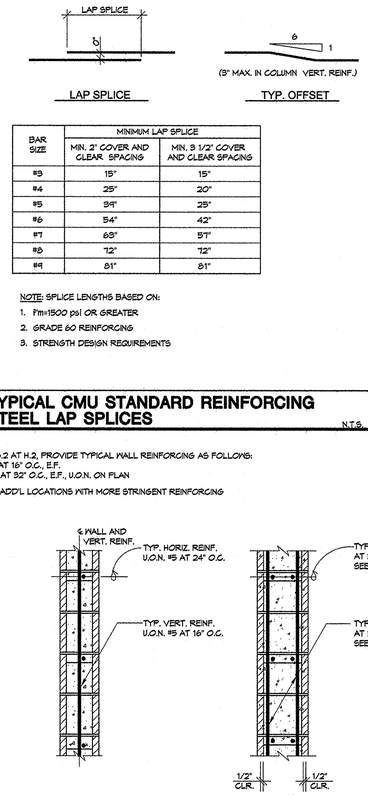

NOTE:

1. WALL PIER LONGITUDINAL REINFORCING TO BE SYMMETRICAL ABOUT THE CENTER OF THE PIER, PROVIDE ADD'L REINF. AS REQ.

7 PLAN - TYPICAL CMU WALL PIER REINFORCING

1"=1'-0"

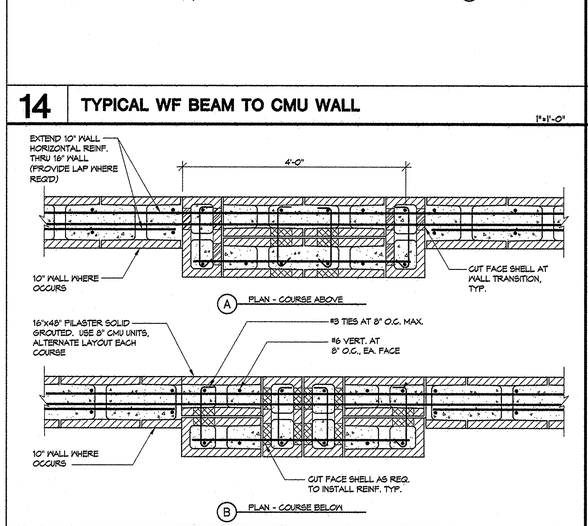

NOTES:

1. MINIMUM BOLT SPACING SHALL BE (12) BOLT DIAMETERS; PROVIDE EDGE DISTANCE OF (6) BOLT DIAMETERS AND/OR 6" MINIMUM TO END OF WALLS.
2. BOLTS SHALL BE ASTM A307, HEADED.

3 TYPICAL ANCHOR BOLTS CMU WALL

N.T.S.

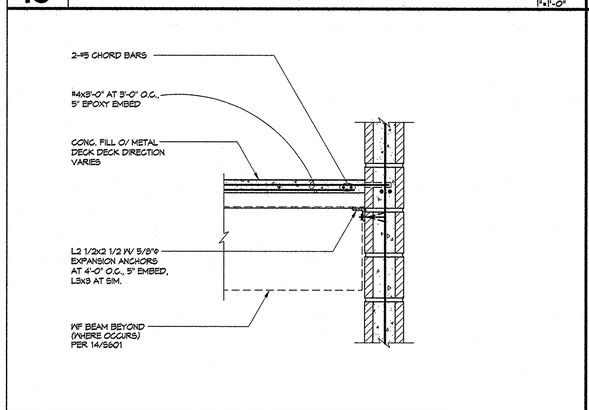

16 SECTION AT MEZZ. FLOOR AND FULL HT CMU WALL

1"=1'-0"

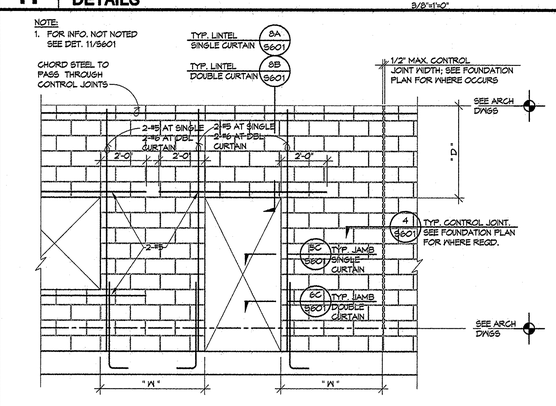

12 TYPICAL CMU WALL REINFORCING DETAILS

3/8"=1'-0"

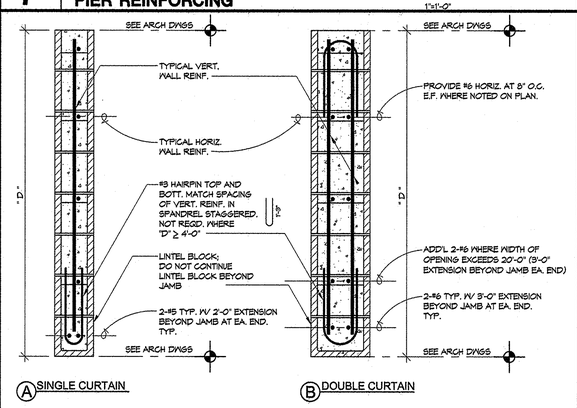

8 SECTION - TYPICAL CMU LINTEL REINFORCING

1"=1'-0"

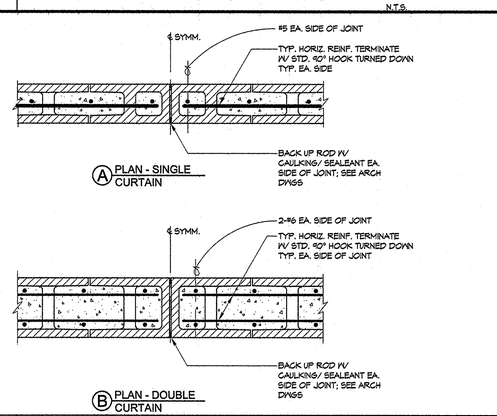

4 TYPICAL CMU WALL CONTROL JOINT

1"=1'-0"

NOTES:

1. ON GRIDLINES 6.2 AT H.2, PROVIDE TYPICAL WALL REINFORCING AS FOLLOWS:
   VERT.'S: #6 AT 16" O.C., E.F.
   HORIZ.'S: #6 AT 32" O.C., E.F., U.O.N. ON PLAN
2. SEE PLAN FOR ADD'L LOCATIONS WITH MORE STRINGENT REINFORCING

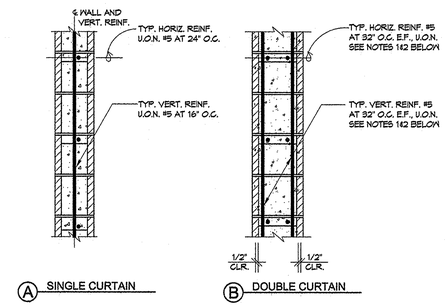

2 SECTION - TYPICAL CMU WALL REINFORCING

1"=1'-0"

PIVOT ARCHITECTURE

STRUCTURAL REGISTERED PROFESSIONAL ENGINEER 65387PE OREGON JAN 23, 2013 VIVEK H. BOURCIER Expires: 12-31-15

IBI GROUP

Iowa

HOHBACH-LEWIN, INC. STRUCTURAL ENGINEERS
256 East 8th Ave. Eugene, OR 97401 (541) 349-1701, Fax (541) 349-1702

HOWARD RECONCILED SET

4J EUGENE SCHOOL DISTRICT
700 HOWARD AVE, EUGENE, OREGON 97404
HOWARD ELEMENTARY SCHOOL

TYPICAL CMU DETAILS

PROJECT #:	1338
ISSUE DATE:	10/28/2014
DRAWN:	AMA
CHECKED:	VHB

REVISIONS:

S601

H-L #9547.1

© 2014 PIVOT ARCHITECTURE

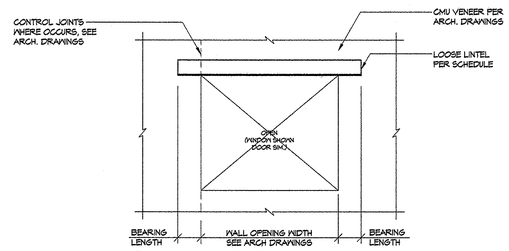

ELEVATION

LOOSE LINTEL SCHEDULE		
OPENING WIDTH	LINTEL SIZE	BEARING EA. END
3'-4" MAX.	L 4x4x1/4	4"
8'-4" MAX.	L 6x4x1/4 LLV	8"
8'-0" MAX.	L 7x4x3/8 LLV	8"

NOTES:

1. ALL LOOSE LINTELS TO BE HOT-DIPPED GALVANIZED
2. FLASHING/ WATERPROOFING NOT SHOWN

5 VENEER LOOSE LINTEL NO SCALE

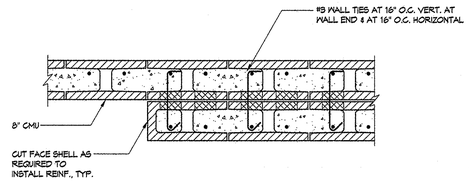

6 PLAN AT DOUBLE CMU WALL 1"=1'-0"

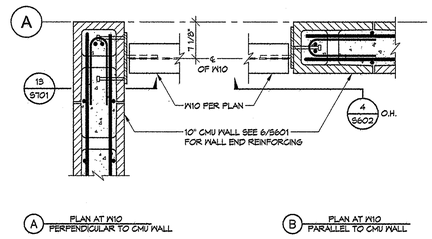

3 W10 AT CMU WALL CONN. - LINE (A) 1"=1'-0"

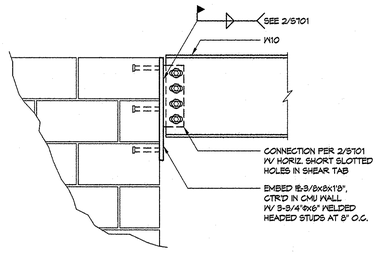

4 CONN. AT W10 PARALLEL TO WALL END 1"=1'-0"

13 | 9 | 5 VENEER LOOSE LINTEL | 1

14 | 10 | 6 PLAN AT DOUBLE CMU WALL | 2

15 | 11 | 7 | 3 W10 AT CMU WALL CONN. - LINE (A)

16 | 12 1"=1'-0" | 8 1"=1'-0" | 4 CONN. AT W10 PARALLEL TO WALL END

PIVOT ARCHITECTURE

STRUCTURAL PROFESSIONAL ENGINEER 65387PE OREGON JAN 23, 2014 VIKKI N. BOURCIER Expires: 12-31-15

IBI GROUP

Iowa

HOHBACH-LEWIN, INC. STRUCTURAL ENGINEERS 990 Lincoln Street Suite 302 Eugene, OR 97401 (541) 349-1701, Fax (541) 349-1702

HOWARD RECONCILED SET

4J EUGENE SCHOOL DISTRICT 700 HOWARD AVE, EUGENE, OREGON 97404

HOWARD ELEMENTARY SCHOOL

CMU DETAILS

PROJECT #:	1336
ISSUE DATE:	1/23/2014
DRAWN:	AMA
CHECKED:	VHB
REVISIONS:	

S602

H-L #9547.1

© 2014 PIVOT ARCHITECTURE

NOTES:
1. FOR REINF. AT EMBED. PL, SEE DET. 14/S601.
2. TIGHTEN BOLTS ONLY SUFFICIENT TO BRING WEB INTO CONTACT W/ SHEAR PLATE. AFTER DECK CONCRETE IS POURED, TIGHTEN "SNUG-TIGHT" PER AISC.

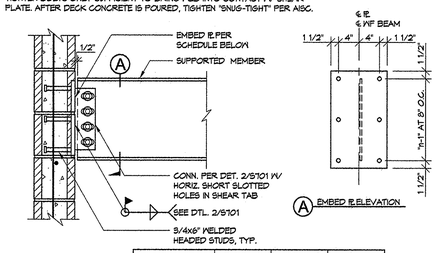

MEMBER SIZE	EMBED PL THICKNESS	# OF ROWS OF STUDS 'n'	TOTAL # OF STUDS
W30	1/2"	6	12
W18, W16	3/8"	3	6
W14, W12	3/8"	3	6
W10*, W8, C10	3/8"	2	4

* SEE 4/S602 FOR CONN. OF W10 PARALLEL TO WALL END

13 TYPICAL BEAM CONNECTION TO CMU

1"=1'-0"

NOTES:
1. ALTERNATE: PROVIDE 1 5/16"ø HOLES AND PL 1/4"x2" SQ. WASHERS.
2. A 3" PROJECTION BEYOND WHAT IS REQD. FOR CONNECTION IS RECOMMENDED. IN CASE BOLT SHIFTS DURING CONCRETE POUR.
3. WHERE COLUMN FLANGE WIDTH IS LESS THAN 5", PROVIDE ADDITIONAL FILLET WELD ON INSIDE FACE OF EACH FLANGE.

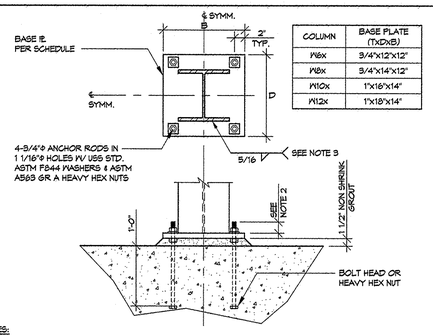

COLUMN	BASE PLATE (TxDxB)
W8x	3/4"x12"x12"
W8x	3/4"x14"x12"
W10x	1"x16"x14"
W12x	1"x18"x14"

9 TYPICAL WF COLUMN BASE PLATE

1"=1'-0"

NOTES:
1. NOTCH FLANGE AT CONN. TO MATCH SUPPORTED BEAM ALIGNMENT.
2. SLOT TS FOR "KNIFE" PL.
3. "KNIFE" PL THICKNESS SAME AS SHEAR TAB THICKNESSES SHOWN IN DET. 4/S701.
4. CONTRACTOR'S OPTION: DET. 6/S701 MAY BE USED AT INT. COLUMNS WHERE BEAMS ARE 16" DEEP OR LESS.

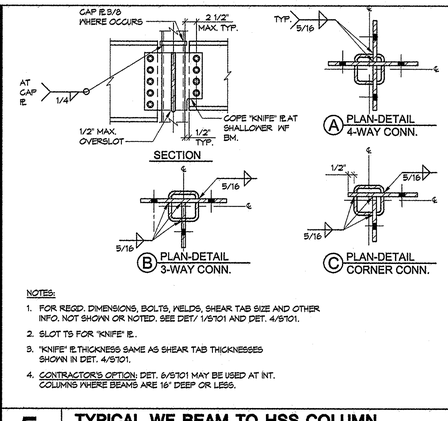

5 TYPICAL WF BEAM TO HSS COLUMN CONNECTION

N.T.S.

NOTES:
1. FOR NUMBER OF BOLTS, AND WELD AND SHEAR TAB SIZE, SEE DET. 4/S701.
2. USE SIM. CONN AT SKEWED FRAMING CONDITION. SKEW SHEAR TAB TO MATCH SUPPORTED BEAM ALIGNMENT. TRIM FLANGE OF SUPPORTED MEMBER AT SKEW ANGLE.

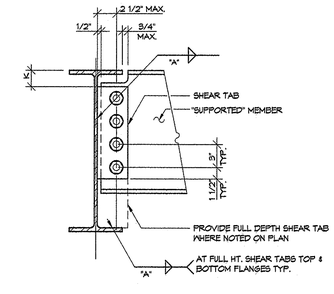

1 TYPICAL ONE-SIDED SHEAR CONNECTION

N.T.S.

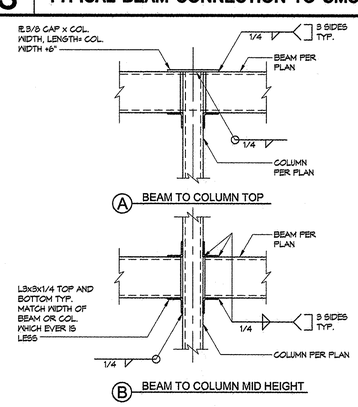

14 TYPICAL HSS BEAM TO HSS COLUMN CONNECTION

1"=1'-0"

NOTES:
1. ALTERNATE: PROVIDE 1 5/16"ø HOLES AND PL 1/4"x2" SQ. WASHERS.
2. A 3" PROJECTION BEYOND WHAT IS REQD. FOR CONNECTION IS RECOMMENDED.
3. AT SHEARWALL END COLUMNS, PROVIDE PL 3/8"x3" SQ. WASHERS AND DOUBLE NUT IN LIEU OF HEADED BOLT.

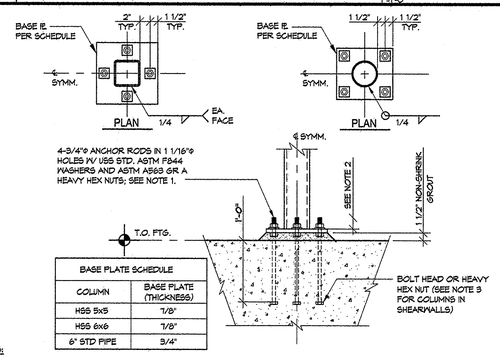

BASE PLATE SCHEDULE	
COLUMN	BASE PLATE (THICKNESS)
HSS 5x5	7/8"
HSS 6x6	7/8"
6" STD PIPE	3/4"

10 TYPICAL HSS AND PIPE COLUMN BASE PLATES

1"=1'-0"

NOTES:
1. NOTCH FLANGE AT CONN. TO MATCH SUPPORTED BEAM ALIGNMENT.
2. USE SIM. CONN AT SKEWED FRAMING CONDITION. SKEW SHEAR TAB TO MATCH SUPPORTED BEAM ALIGNMENT. TRIM FLANGE OF SUPPORTED MEMBER AT SKEW ANGLE.

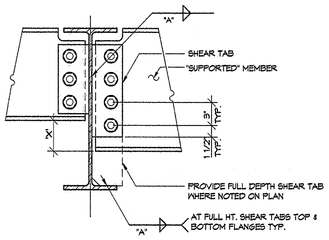

2 TYPICAL TWO-SIDED SHEAR CONNECTION

N.T.S.

NOTES:
1. FOR ITEMS NOT SHOWN OR NOTED, SEE DET. 4/S701.
2. CONSIDER THE CONNECTION ONE-SIDED WHERE BEAMS ARE OFFSET BY MORE THAN 12" OR 'X' EXCEEDS 4".

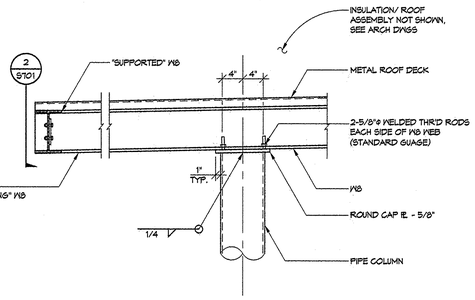

6 WF CONN. AT CANOPY COLUMN

1"=1'-0"

NOTES:
1. FOR REQD. DIMENSIONS, BOLTS, WELDS, SHEAR TAB SIZE AND OTHER INFO. NOT SHOWN OR NOTED. SEE DET. 1/S701 AND DET. 4/S701.
2. USE SIM. CONN. AT SKEWED FRAMING CONDITION. SKEW SHEAR TAB TO MATCH "SUPPORTED" BEAM ALIGNMENT. TRIM FLANGE OF "SUPPORTED" MEMBER AT SKEW ANGLE.

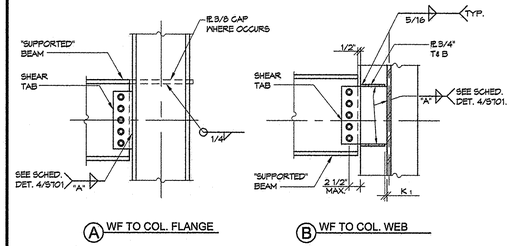

3 TYPICAL WF BEAM TO WF COLUMN CONNECTION

N.T.S.

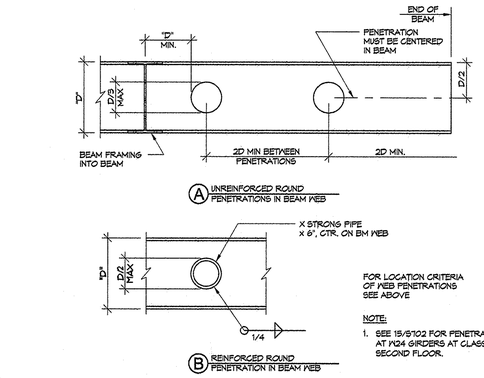

FOR LOCATION CRITERIA OF WEB PENETRATIONS SEE ABOVE

NOTE:
1. SEE 15/S702 FOR PENETRATIONS AT N24 GIRDERS AT CLASSROOM SECOND FLOOR.

15 PENETRATIONS THRU WF BEAM WEB

N.T.S.

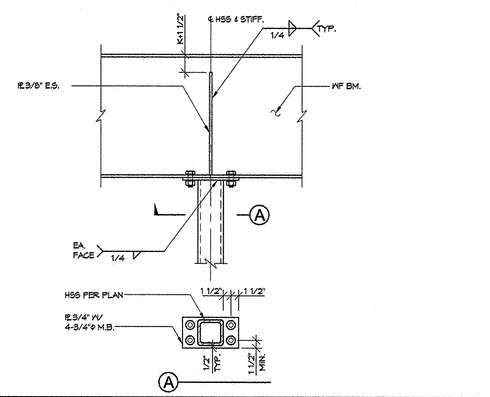

11 TYPICAL WF BEAM OVER HSS COLUMN

N.T.S.

NOTE:
1. CONNECTION IS SINGLE SIDED AT SIM. CONDITION

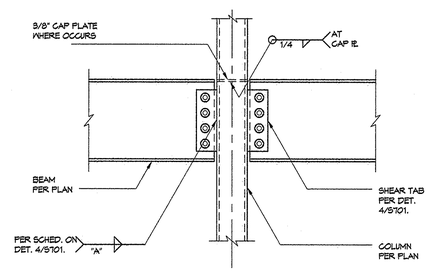

7 TYPICAL WF BEAM TO COLUMN CONNECTION AT UTILITY COURT/ADMINISTRATION (LOW) ROOFS

1"=1'-0"

NOTES:
1. PROVIDE COMPLETE PENETRATION WELD BTWN. SHEAR TAB AND SUPPORTING MEMBER WHERE REQUIRED ANGLE IS OUTSIDE OF AWS PRE-QUALIFIED FILLET WELD LIMITATIONS.
2. AT CONNECTIONS DESIGNATED ON PLAN AS PART OF THE SLRS, PROVIDE 2 ROWS OF SLIP CRITICAL SCHEDULED BOLTS, 1/2" FILLET WELD AND 1/2" GR-50 SHEAR TAB. SEE DETAIL 2/S704 FOR ADD'L REQUIREMENTS

NOMINAL SIZE OF SUPPORTED MEMBER	NO. OF 7/8" DIA. A325N BOLTS (U.O.N.)	FILLET WELD SIZE "A"	SHEAR TAB THICKNESS (IN.)
W8, W10, C8, C10	2	5/16	3/8
W12, W14, C12	3	5/16	3/8
W16	4	5/16	3/8
W18	4	5/16	3/8
W21	5	5/16	3/8
W24	6	5/16	3/8
W27	7	5/16	3/8
W30	8	3/8	1/2
W33	9	3/8	1/2

4 TYPICAL BOLTED CONNECTION SCHEDULE

N.T.S.

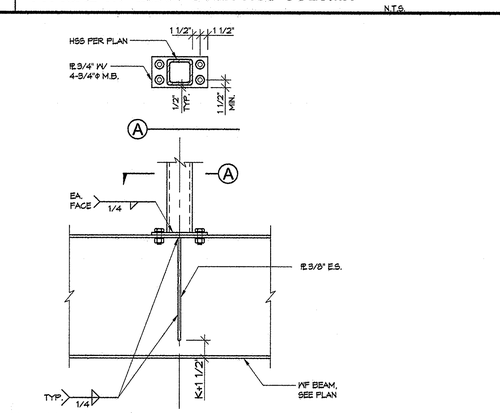

12 TYPICAL HSS COLUMN OVER WF BEAM

N.T.S.

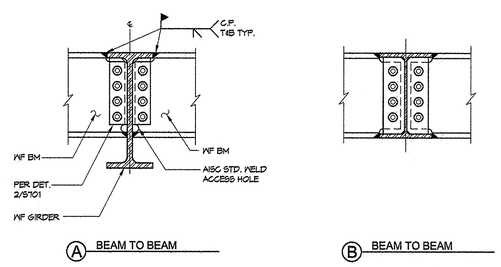

8 NON-SEISMIC MOMENT CONNECTION

N.T.S.

PIVOT ARCHITECTURE

STRUCTURAL REGISTERED PROFESSIONAL ENGINEER 63387PE OREGON JAN 29, 2013 VIKRI H. BOURNER Expires: 12-31-13

IBI GROUP

HOHBACH-LEWIN, INC. STRUCTURAL ENGINEERS
ZIPE Center, Suite 302
296 East 5th Ave.
Eugene, OR 97401
(541) 349-1701, Fax (541) 349-1702

HOWARD RECONCILED SET
EUGENE SCHOOL DISTRICT
700 HOWARD AVE, EUGENE, OREGON 97404
HOWARD ELEMENTARY SCHOOL

TYPICAL STEEL DETAILS

PROJECT #:	1336
ISSUE DATE:	10/29/2014
DRAWN:	AMA
CHECKED:	VHB
REVISIONS:	

S701

H-L #9547.1

© 2014 PIVOT ARCHITECTURE

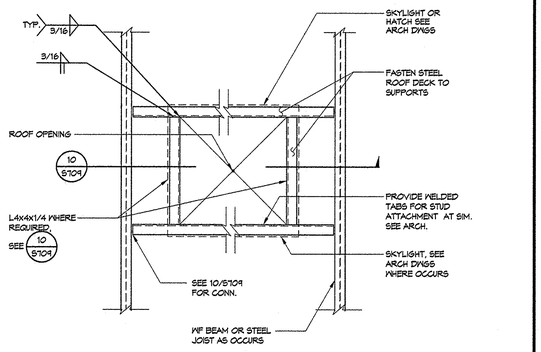

13 ROOF OPENING AT SKYLIGHT - FRAMING PLAN

1"=1'-0"

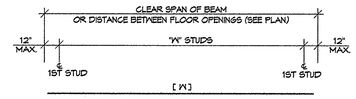

PLAN-STUD SHEAR CONNECTORS (UNIFORM SPACING)

NOTES:

1. SEE FRAMING PLANS FOR NUMBER AND/ OR SPACING REQUIREMENTS OF STUD SHEAR CONNECTORS.
2. SHEAR STUD CONNECTORS SHALL BE 3/4"ϕ STUDS CONFORMING TO ASTM A1044, FOR OTHER STUD REQUIREMENTS, SEE DET. 10/S102.
3. [W] DENOTES NO. OF STUDS UNIFORMLY SPACED ALONG FULL LENGTH OF BEAM.
4. [X, Y, Z] DENOTES NO. OF STUDS UNIFORMLY SPACED BETWEEN POINT LOADS (FROM INTERSECTING SUPPORTED MEMBERS, COLUMN ABOVE, ETC.)

9 TYPICAL STUD SHEAR CONNECTOR

CONTRACTORS OPTION:
PROVIDE CONT. BENT 54 MIL PLATE BELOW SLOPED DECK. WELD TO BEAM AT SAME SPACING AS DECK WELD.

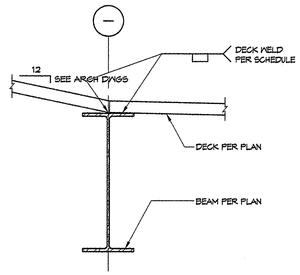

5 TYPICAL DECK SLOPE CHANGE AT WF BEAM

NOTE:
1. A STUD WELDED THROUGH THE DECK SUBSTITUTES FOR A PUDDLE WELD.

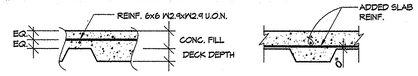

MARK	DECK TYPE & GAUGE	DECK DEPTH	STEEL DECK ONLY			WELD ATTACHMENT		
			$I(in^4)$	$+S(in^3)$	$-S(in^3)$	AT SUPPORT MEMBERS	AT PARALLEL MEMBERS	AT SIDELAPS
D1	VERCO FORMLOK WB 18 GA W/ 3" NW CONC. FILL	3"	1.20	0.167	0.167	1/2" ϕ EFFECTIVE PUDDLE WELD AT EA. FLUTE	1/2" ϕ EFFECTIVE PUDDLE WELD AT 12" O.C.	BUTTON PUNCH AT 12" O.C.
D2	VERCO FORMLOCK B 18GA W/ 2 1/2" NW CONC. FILL	1 1/2"	0.30	0.322	0.395	1/2" ϕ EFFECTIVE PUDDLE WELD AT EA. FLUTE	1/2" ϕ EFFECTIVE PUDDLE WELD AT 12" O.C.	PUNCHLOK AT 12" O.C.
D3	VERCO PLB-36 18 GA.	1 1/2"	.302	.322	.395	1/2" ϕ EFFECTIVE PUDDLE WELD AT EA. FLUTE	1/2" ϕ EFFECTIVE PUDDLE WELD AT 12" O.C.	PUNCHLOK AT 12" O.C.
D4	VERCO PLN-24-CD (ACOUSTICAL) 18 GA.	3"	1.213	0.731	0.716	1/2" ϕ EFFECTIVE PUDDLE WELD AT EA. FLUTE	1/2" ϕ EFFECTIVE PUDDLE WELD AT 12" O.C.	PUNCHLOK AT 12" O.C.
D5	VERCO PLN-24 (ACOUSTICAL) 18 GA.	3"	1.213	0.731	0.716	1/2" ϕ EFFECTIVE PUDDLE WELD AT EA. FLUTE	1/2" ϕ EFFECTIVE PUDDLE WELD AT 12" O.C.	PUNCHLOK AT 12" O.C.
D6	VERCO PLN-24 18 GA.	3"	1.213	0.731	0.716	1/2" ϕ EFFECTIVE PUDDLE WELD AT EA. FLUTE	1/2" ϕ EFFECTIVE PUDDLE WELD AT 12" O.C.	PUNCHLOK AT 12" O.C.

1 STEEL DECK PROPERTIES

N.T.S.

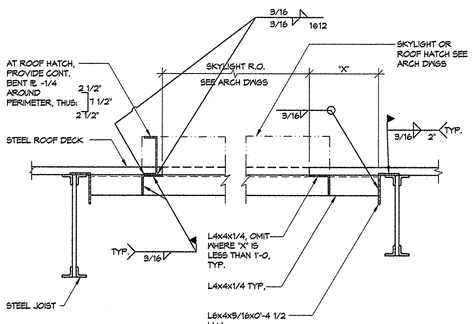

14 SECTION THRU ROOF SKYLIGHT

1"=1'-0"

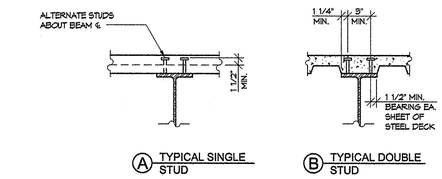

(A) TYPICAL SINGLE STUD

(B) TYPICAL DOUBLE STUD

NOTES:

1. SPACE STUDS EVENLY ALONG BEAM; STUD SPACING SHALL NOT BE GREATER THAN 2'-0" NOR LESS THAN 4 1/2".
2. PROVIDE DOUBLE STUDS WHERE SINGLE STUD SPACING WOULD BE LESS THAN 4 1/2".
3. LOCATE STUDS IN CENTER OF BOTTOM FLUTE WHEN DECK IS PERPENDICULAR TO BEAM. LIMIT ONE STUD PER FLUTE.
4. SPLIT DECK LONGITUDINALLY AND PROVIDE 43 MIL CLOSURE WHERE REQ'D. TO ENLARGE TROUGH.

10 TYPICAL SHEAR STUD CONNECTOR

NOTE:
1. SEE WELDED TRUSS DETAILS AND DECK SCHEDULE FOR COMPLETE INFORMATION.

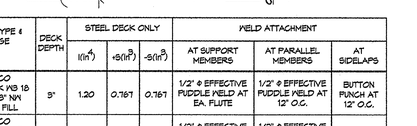

(A) LAP JOINT

(B) BUTT JOINT

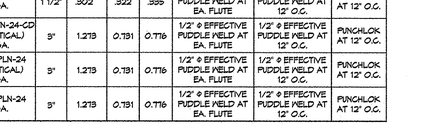

(C) DECK DIRECTION CHANGE

(D) DECK OFFSET

3 TYPICAL DECK ATTACHMENT

N.T.S.

NOTE:
1. FOR OPENING LESS THAN 2'-0" WIDE, SEE DET. 1/S102.

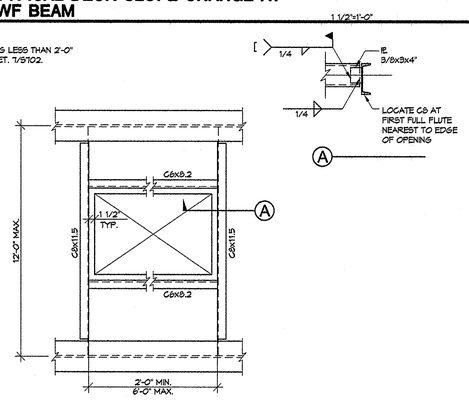

6 TYPICAL STEEL DECK OPENING LARGER THAN 2'-0"

1 1/2"=1'-0"

STRUCTURAL DESIGN CRITERIA

DEAD LOAD	15 PSF
LIVE LOAD	100 PSF
SNOW LOAD	25 PSF
WIND LOAD	90 MPH
EXPOSURE	B
SEISMIC	SDC D
SEISMIC LOAD	0.2
SEISMIC LOAD	0.2

NOTES:

1. STRUCTURAL PROPERTIES OF STEEL DECK SYSTEM SHALL EQUAL OR EXCEED THE PROPERTIES LISTED IN DETAIL 1/S102.
2. SEE MANUFACTURER'S SPECIFICATIONS FOR ADDITIONAL INFO.
3. DECK SHALL BE CONTINUOS OVER 3 SPANS WHEREVER POSSIBLE PROVIDE SHORING AS REQUIRED PER MANUFACTURER'S RECOMMENDATIONS.
4. DECK SHALL HAVE A MINIMUM OF 2" BEARING AT ALL SUPPORTING MEMBERS PERPENDICULAR TO DECK SPAN, AND 1" AT ALL PARALLEL MEMBERS.
5. DECK WELDING SHALL BE AS NOTED IN DETAIL 1/S102.
6. OPENINGS THROUGH DECKING SHOWN ON FRAMING PLANS ARE NOT COMPLETE AS TO NUMBER, SIZE AND LOCATION. FOR COMPLETE INFORMATION REFER TO DRAWINGS OTHER THAN STRUCTURAL.
7. USE STRENGTHENING AT OPENINGS AS SHOWN IN DETAILS 6/S102 AND 7/S102 PROVIDE STRENGTHENING BEFORE CUTTING OPENING.
8. MULTIPLE OPENINGS WITH A CLEAR DISTANCE LESS THAN THREE TIMES THE SIZE OF THE LARGER OPENING TO BE TREATED AS A SINGLE GROUP OPENING.
9. IF OPENING IS CUT PRIOR TO FILL PLACEMENT, PROVIDE CLOSURE PIECES AND SHORING AS REQUIRED.
10. FOR OPENINGS THROUGH DECK THAT CUT ONLY ONE WEB AND ARE LESS THAN 5" SQUARE OR 5" DIAMETER MAXIMUM, NO STRENGTHENING IS REQUIRED.
11. SEE MECHANICAL/ PLUMBING DRAWINGS FOR DETAILS OF UTILITIES SUSPENDED FROM THE CONCRETE AND STEEL DECK SYSTEM.
12. DO NOT PLACE CONDUITS OR OTHER PIPES IN CONCRETE FILL OVER DECK.

2 STEEL DECK NOTES

NOTE:
1. PENETRATIONS THRU TYP. W24x SECOND FLOOR BEAMS AT CLASSROOMS ONLY. PENETRATIONS AT OTHER MEMBERS OR THAT DO NOT MEET THE CRITERIA SHOWN REQUIRE WRITTEN APPROVAL.

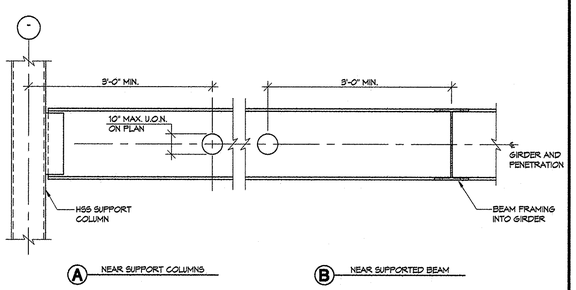

(A) NEAR SUPPORT COLUMNS

(B) NEAR SUPPORTED BEAM

15 PENETRATIONS THRU W24 GIRDER WEBS AT CLASSROOM SECOND FLOOR

N.T.S.

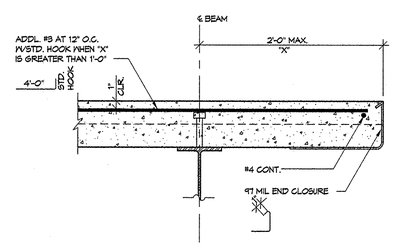

11 TYPICAL EDGE OF DECK (PERPENDICULAR TO BEAM)

1 1/2"=1'-0"

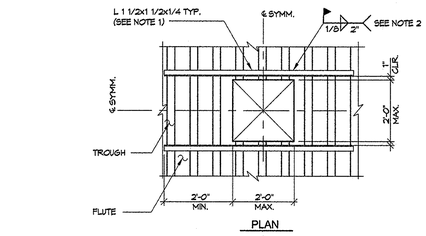

NOTES:

1. AT CONTRACTOR'S OPTION: WELD ANGLES BELOW STEEL DECK.
2. WELD ANGLES TO A MINIMUM OF TWO FULL DECK FLUTES EACH END OF EACH ANGLE.
3. NO DECK REINFORCING REQD. WHEN OPENING IS LESS THAN 5" WIDE.
4. THIS DETAIL SHALL NOT APPLY FOR MULTIPLE OPENINGS SPACED LESS THAN 6 FT. O.C. UNLESS SPECIFICALLY APPROVED BY STRUCTURAL ENGINEER.

7 TYPICAL STEEL DECK OPENING SMALLER THAN 2'-0"

1 1/2"=1'-0"

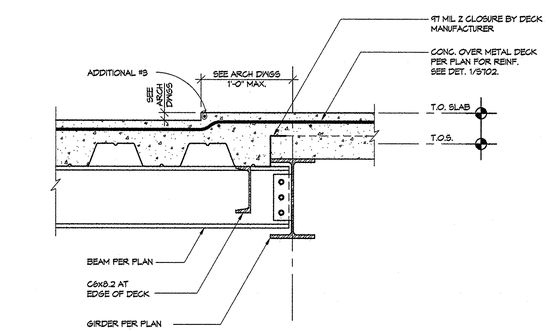

16 TYPICAL DEPRESSED SLAB

1 1/2"=1'-0"

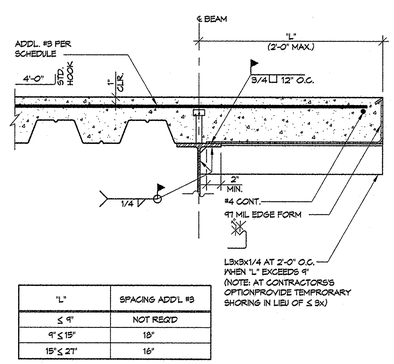

"L"	SPACING ADDL #3
≤ 9"	NOT REQD
9" ≤ 15"	18"
15" ≤ 27"	16"

12 TYPICAL EDGE OF DECK (PARALLEL TO BEAM)

1 1/2"=1'-0"

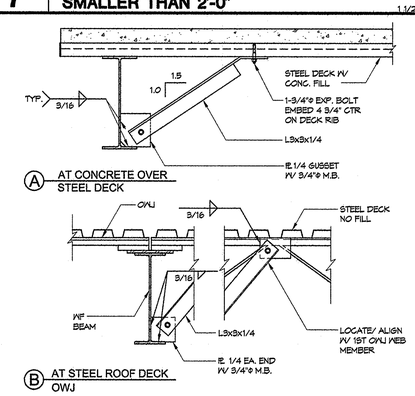

8 TYPICAL BEAM BOTTOM FLANGE BRACING

N.T.S.

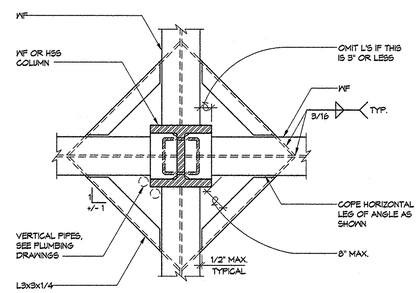

4 TYPICAL STEEL DECK SUPPORT AT COLUMN

1"=1'-0"

PIVOT ARCHITECTURE

STRUCTURAL REGISTERED PROFESSIONAL ENGINEER 65387PE OREGON JULY 23, 2013 VIKRI K. BOURCIER Expires: 12-31-15

IBI GROUP

Iowa

HOHBACH-LEWIN, INC. STRUCTURAL ENGINEERS
206 East 8th Ave. Eugene, OR 97401
(541) 349-1701, Fax (541) 349-1702

HOWARD RECONCILED SET
EUGENE SCHOOL DISTRICT
700 HOWARD AVE, EUGENE, OREGON 97404
HOWARD ELEMENTARY SCHOOL

TYPICAL STEEL DETAILS

PROJECT #:	1306
ISSUE DATE:	10/30/2014
DRAWN:	AMA
CHECKED:	VKB
REVISIONS:	

S702

H-L #9547.1

© 2014 PIVOT ARCHITECTURE

NOTES
1. SEE DETAIL 1/S703 FOR BRACED FRAME NOTES.

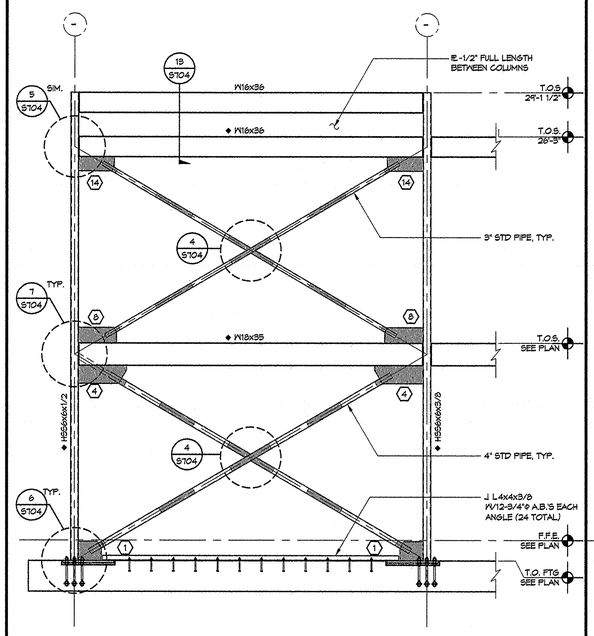

5 BRACED FRAME BF-5 ELEVATION

1/4"=1'-0"

NOTES
1. SEE DETAIL 1/S703 FOR BRACED FRAME NOTES.

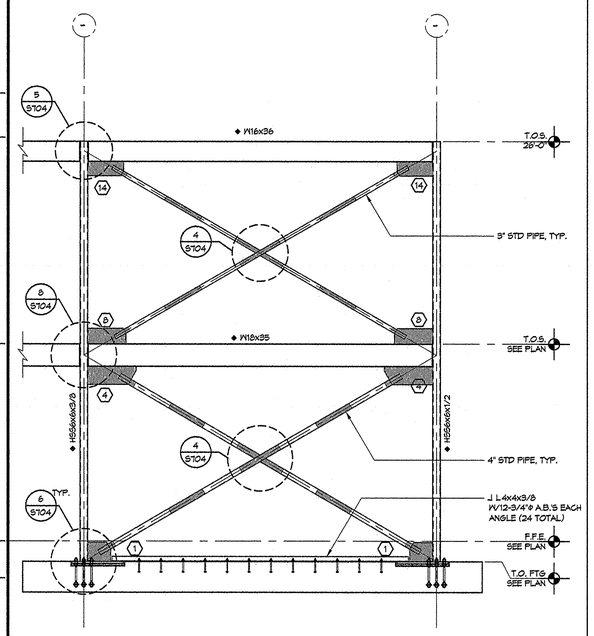

3 BRACED FRAME BF-3 ELEVATION

1/4"=1'-0"

NOTES
1. SEE DETAIL 2/S704 FOR BRACED FRAME NOTES.
2. DENOTES GUSSET PLATE; SEE SCHEDULE ON DET. 16/S704.
3. DENOTES PROTECTED ZONE. PROTECTED ZONE IS MIDDLE L/4 OF BRACE, CONNECTION, AND PORTION OF BRACE WITHIN D OF CONNECTION. "L" IS THE LENGTH OF THE BRACE MEASURED FROM HINGE LINE TO HINGE LINE. "D" IS THE WIDTH OF THE BRACE. SEE SCBF NOTES FOR LIMITATIONS WITHIN THE PROTECTED ZONE.
4. SEE DETAIL 4/S402 FOR METAL STUD WALL INSTALLATION AT BRACES IN ALL BRACED FRAME BAYS.

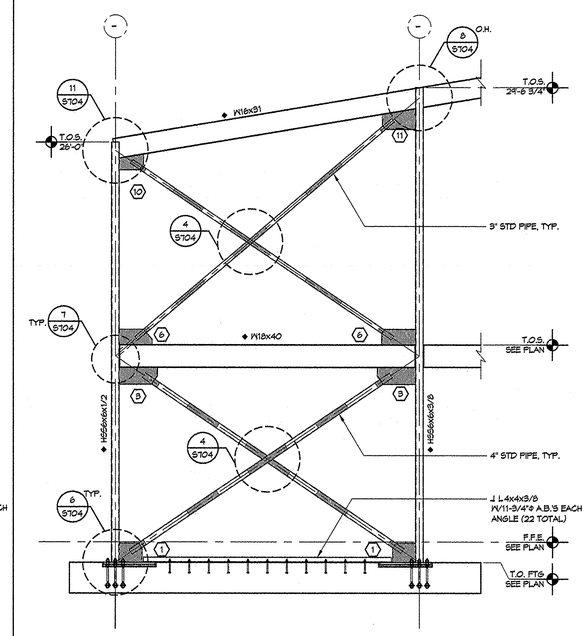

1 BRACED FRAME BF-1 ELEVATION

1/4"=1'-0"

NOTES
1. SEE DETAIL 1/S703 FOR BRACED FRAME NOTES.

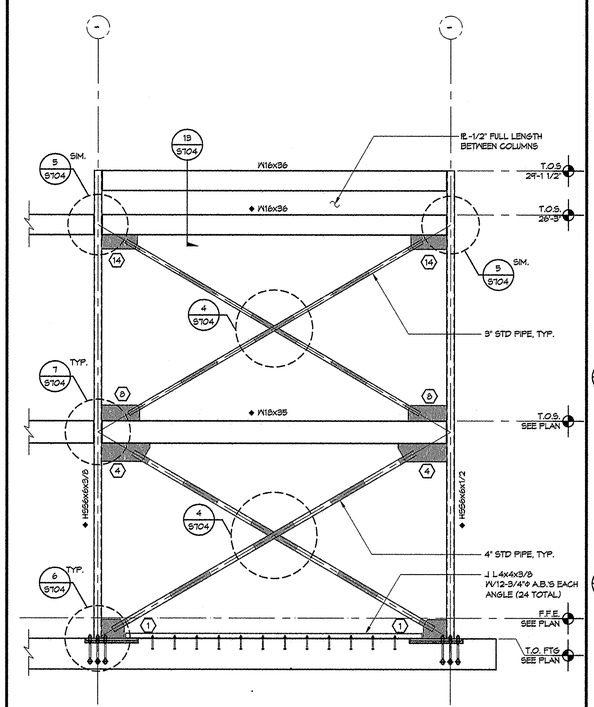

6 BRACED FRAME BF-6 ELEVATION

1/4"=1'-0"

NOTES
1. SEE DETAIL 1/S703 FOR BRACED FRAME NOTES.

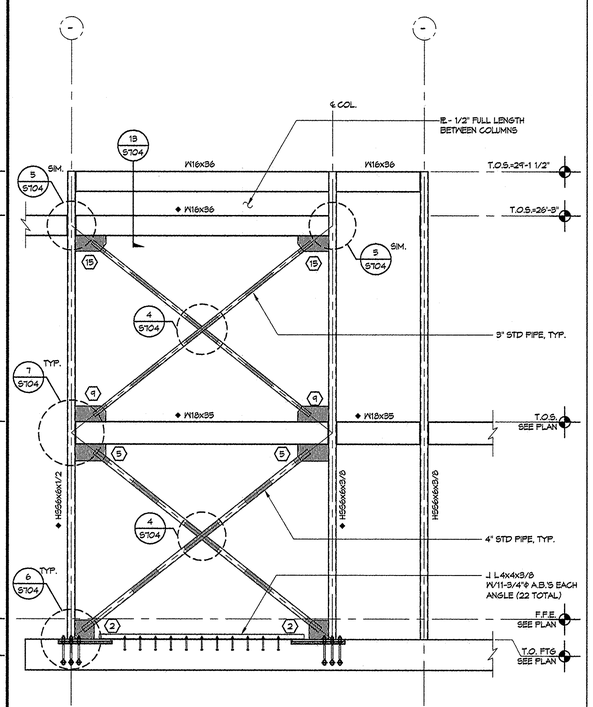

4 BRACED FRAME BF-4 ELEVATION

1/4"=1'-0"

NOTES
1. SEE DETAIL 1/S703 FOR BRACED FRAME NOTES.

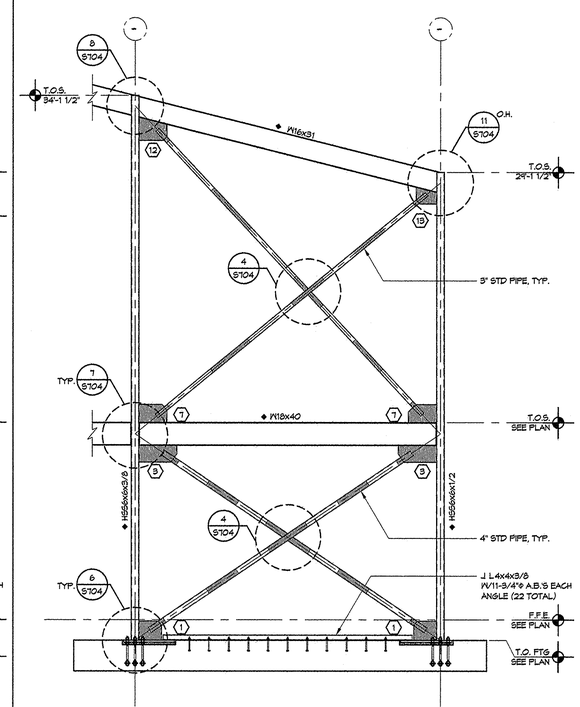

2 BRACED FRAME BF-2 ELEVATION

1/4"=1'-0"

7

8

PIVOT ARCHITECTURE

STRUCTURAL REGISTERED PROFESSIONAL ENGINEER 65387PE OREGON JAN 23, 2014 VIKKI M. BOURNER Expires: 12-31-15

IBI GROUP

Iowa

HOHBACH-LEWIN, INC. STRUCTURAL ENGINEERS
Suite 302
Eugene, OR 97401
(541) 349-1701, Fax: (541) 349-1702

HOWARD RECONCILED SET
EUGENE SCHOOL DISTRICT 4J
700 HOWARD AVE, EUGENE, OREGON 97404
HOWARD ELEMENTARY SCHOOL

STEEL BRACED FRAME ELEVATIONS

PROJECT #:	1338
ISSUE DATE:	10/22/2014
DRAWN:	AMA
CHECKED:	VMB
REVISIONS:	

S703

H-L #9547.1

© 2014 PIVOT ARCHITECTURE

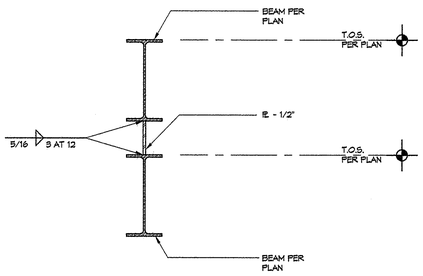

13 ROOF BEAM AT BF 4, 5, 6

1"=1'-0"

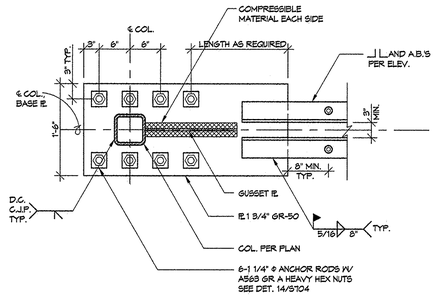

9 BASE PLATE DETAIL 1

1"=1'-0"

NOTES:

1. BRACE REINFORCING PLATES OMITTED FOR CLARITY; SEE DET. 3/S104 SEE DET. 16/S104 FOR BRACE AND GUSSET WELDING SCHEDULE.
2. BRACE SHALL TERMINATE OUTSIDE OF ELLIPTICAL HINGE LINE AS SHOWN.

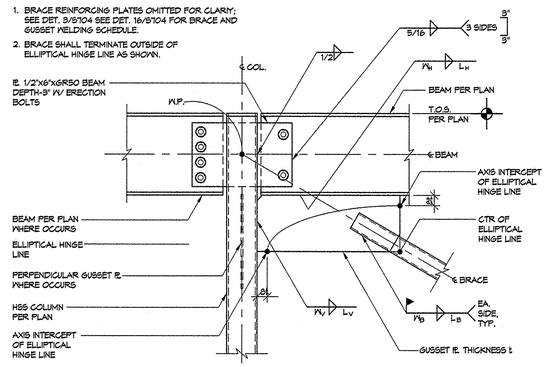

5 GUSSET PLATE DETAIL AT ROOF

1"=1'-0"

SLRS NOTES (SCBF)

A. SEISMIC LOAD RESISTING SYSTEM:
ALL STRUCTURAL STEEL MEMBERS SPECIFIED (I.E., WITH SIZE GIVEN) ON THIS SHEET AND ALL CONNECTIONS DETAILED ON THIS SHEET ARE HEREBY DESIGNATED PART OF THE OF THE SEISMIC LOAD RESISTING SYSTEM (SLRS). SEE PLAN AND ELEVATIONS FOR ADDITIONAL ELEMENTS OF THE SLRS. SUCH MEMBERS & CONNECTIONS ARE DESIGNATED THUS: . IN ADDITION TO THE 2005 AISC SPECIFICATION AND D1.1, & THE RCSC SPECIFICATION, ELEMENTS OF THE SLRS SHALL MEET THE FOLLOWING:

1. PLATES: ASTM A572 GRADE 50.
2. WELD ELECTRODES:
   TYPICAL: E70XX; MIN. CVN 20FT-LB AT 0°F
   DEMAND CRITICAL (D.C.): E70XX; MIN. CVN 20FT-LB AT -20°F; 40FT-LB AT 70°F.
   DIFFUSIBLE HYDROGEN (ALL ELECTRODES): H16 MAX.
3. HIGH STRENGTH BOLTS: ASTM A325-N PRE-TENSIONED; MEET THE REQUIREMENTS FOR SLIP-CRITICAL FAYING SURFACES WITH A CLASS A FAYING SURFACE.
4. ANCHOR RODS:
   TYPICAL: ASTM F1554 GRADE 36 W/ ASTM A563 HEAVY HEX NUTS
   WELDABLE: ASTM F1554 GRADE 55 91 W/ ASTM A563 HEAVY HEX NUTS
   HIGH STRENGTH: ASTM F1554 GRADE 105 W/ ASTM A563 GRADE DH HEAVY HEX NUTS.

B. PROTECTED ZONE:
WELDED, BOLTED, SHOT-IN, AND SCREWED-IN ATTACHMENTS ARE PROHIBITED IN THE IN THE PROTECTED ZONE. EXCEPTION: ERECTION BOLTS FOR BRACE INSTALLATION ARE PERMITTED. LEAVE ERECTION BOLTS IN PLACE.

1. SCBF: PROTECTED ZONE IS THE MIDDLE L/4 OF THE BRACE, CONNECTION, AND THE PORTION OF THE BRACE WITHIN D OF THE CONNECTION. "L" IS THE LENGTH OF THE BRACE MEASURED FROM HINGE LINE TO HINGE LINE. "D" IS THE WIDTH OF THE BRACE.

C. SHOP/ERECTION DRAWINGS:
SHOP AND ERECTION DRAWINGS SHALL INCLUDE THE FOLLOWING IN ADDITION TO ITEMS REQUIRED BY THE AISC SPEC, AND D1.1, AND THE RCSC SPEC.

1. DESIGNATION OF MEMBERS AND CONNECTIONS THAT ARE PART OF THE SLRS.
2. CONNECTION MATERIAL SPECIFICATIONS AND SIZES (DIMENSION ALL WELDS).
3. LOCATIONS AND DIMENSIONS OF PROTECTED ZONES.
4. GUSSET PLATES DRAWN TO SCALE WITH HINGE LINES SHOWN.

D. WELDING REQUIREMENTS:
WELDING SHALL CONFORM TO THE 2005 AISC SEISMIC PROVISIONS, APPENDIX W OR AWS D1.8 (2006) AND SHALL INCLUDE, BUT NOT BE LIMITED TO THE FOLLOWING:

1. WELD PROCEDURE SPECIFICATIONS (WPS) SHALL INCLUDE POWER SOURCE, ELECTRODE MFR. AND TRADE NAME, AND ELECTRODE MFR'S CUTSHEET AND CERTIFICATIONS.
2. FCAW-S FILLER METALS SHALL NOT BE INTERMIXED WITH THOSE OF OTHER PROCESSES.
3. DEMAND CRITICAL WELDS FOR SCBF INCLUDE COMPLETE PENTRATION GROOVE WELDS AT COLUMN SPLICES AND COLUMN BASE PLATES.

E. QUALITY ASSURANCE PLAN:
QUALITY ASSURANCE SHALL BE PER THE 2005 AISC SEISMIC PROVISIONS, APPENDIX Q AND SHALL INCLUDE BUT NOT BE LIMITED TO THE FOLLOWING:

1. WELDING QA/QC PERSONEL SHALL BE QUALIFIED IN ACCORDANCE WITH THE SEISMIC PROVISIONS (SECTION W3).
2. VISUAL WELDING INSPECTION SHALL BE PERFORMED AT THE INSPECTION POINTS GIVEN IN THE SEISMIC PROVISIONS (SECTION Q5.1)
3. NONDESTRUCTIVE TESTING (NDT), IF REQUIRED, SHALL BE PERFORMED IN ACCORDANCE WITH THE SEISMIC PROVISIONS (SECTION W4). NDT IS REQUIRED FOR THE FOLLOWING (SEE SEISMIC PROVISIONS SECTION Q5.2).
   a. k-AREA: WHEN WELDING IS PERFORMED IN THE k-AREA, THE WEB SHALL BE TESTED FOR CRACKS USING MAGNETIC PARTICLE TESTING.
   b. CJP GROOVE WELDS: ULTRASONIC TESTING SHALL BE PERFORMED FOR CJP GROOVE WELDS IN MATERIALS 5/16" OR THICKER.
   c. BASE METAL THICKER THAN 1 1/2": WHEN CONNECTED BY CJP WELDS TO 3/4" OR THICKER MATERIAL, THE BASE METAL SHALL BE ULTRASONICALLY TESTED FOR DISCONTINUITIES BEHIND AND ADJACENT TO THE WELD FUSION LINE.
   d. BEAM COPE AND ACCESS HOLES IN MATERIAL THICKER THAN 1 1/2": MAGNETIC PARTICLE TESTING IS REQUIRED AT WELDED SPLICES AND CONNECTIONS OF THERMALLY CUT SURFACES OF BEAM COPES AND ACCESS HOLES.
4. OBSERVATION OF BOLTING OPERATIONS SHALL BE PERFORMED IN ACCORDANCE WITH THE SEISMIC PROVISIONS (SECTION Q5.3)
5. THE FOLLOWING ITEMS SHALL BE INSPECTED IN ACCORDANCE WITH THE SEISMIC PROVISIONS (SECTION Q5.4):
   a. PROTECTED ZONES: NO HOLES OR UNAPPROVED ATTACHMENTS.

2 SLRS NOTES

N.T.S.

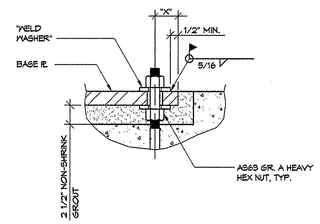

ANCHOR ROD DIAMETER	OVERSIZE HOLE SIZE IN BASE PL	WELD WASHER PLATE	"X" MIN.
1 1/4"	2"	PL 1/2X3X3	2 1/2"

14 TYPICAL WELD WASHER AT OVERSIZED A.B. HOLE

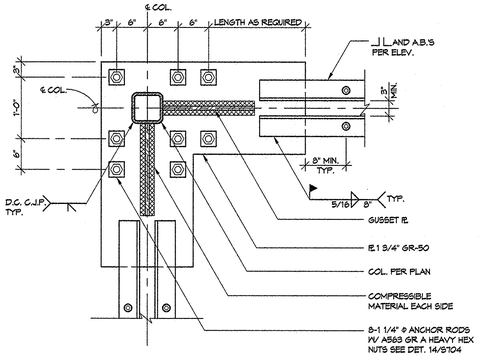

10 BASE PLATE DETAIL 2

1"=1'-0"

NOTE:

1. FOR ITEMS NOT SHOWN OR NOTED, SEE DET. 5/S104

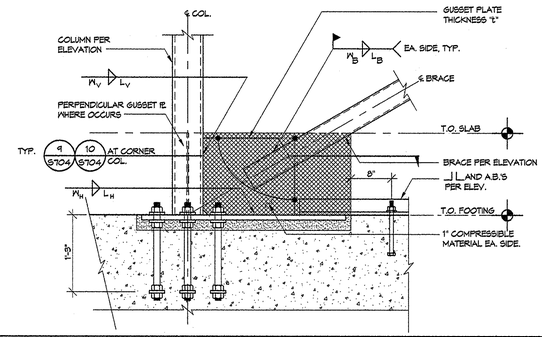

6 GUSSET PLATE DETAIL

1"=1'-0"

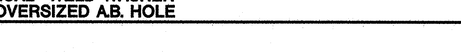

GUSSET PLATE WELDING

CONNECTION NUMBER	DETAIL NUMBER	"t"	L_H	W_H	L_V	W_V	L_B	W_B
1	6	3/8"	18"	5/16"	15"	5/16"	9"	1/4"
2	6	3/8"	15"	5/16"	15"	5/16"	9"	1/4"
3	7	3/8"	30"	5/16"	13"	5/16"	9"	1/4"
4	7	3/8"	38"	5/16"	14"	5/16"	9"	1/4"
5	7	3/8"	24"	5/16"	13"	5/16"	9"	1/4"
6	7	1/4"	26"	1/4"	12"	1/4"	9"	3/16"
7	7	1/4"	22"	1/4"	14"	1/4"	9"	3/16"
8	7	1/4"	30"	1/4"	12"	1/4"	9"	3/16"
9	7	1/4"	24"	1/4"	12"	1/4"	9"	3/16"
10	11	1/4"	19"	1/4"	9"	1/4"	9"	3/16"
11	8	1/4"	26"	1/4"	16"	1/4"	9"	3/16"
12	8	1/4"	22"	1/4"	18"	1/4"	9"	3/16"
13	11	1/4"	16"	1/4"	9"	1/4"	9"	3/16"
14	5	1/4"	28"	1/4"	11"	1/4"	9"	3/16"
15	5	1/4"	24"	1/4"	12"	1/4"	9"	3/16"

NOTES:

1. ALL CONNECTION WELDS SHALL EXTEND THE FULL LENGTH OF GUSSET PLATES. THE WELD LENGTHS IN THE TABLE ARE MINIMUMS.
2. WELD LENGTHS ARE NOT PLATE DIMENSIONS. SIZE PLATES TO ACCOMODATE THE SPECIFIED WELDS AND MEET OTHER GEOMETRIC REQUIREMENTS AS SHOWN ON THE DETAILS.

16 GUSSET WELDING

N.T.S.

NOTE:

1. FOR ITEMS NOT SHOWN OR NOTED, SEE DET. 5/S104

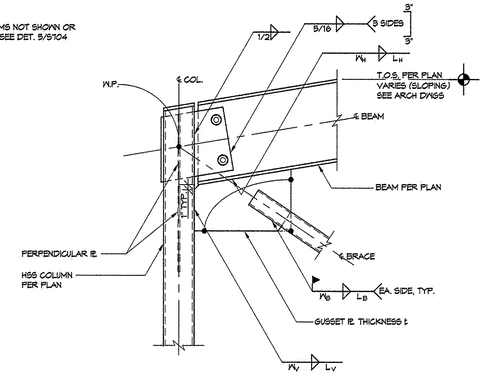

11 GUSSET PLATE DETAIL AT SLOPING ROOF - CORNER CONDITION

1"=1'-0"

NOTE:

1. FOR ITEMS NOT SHOWN OR NOTED, SEE DET. 5/S104

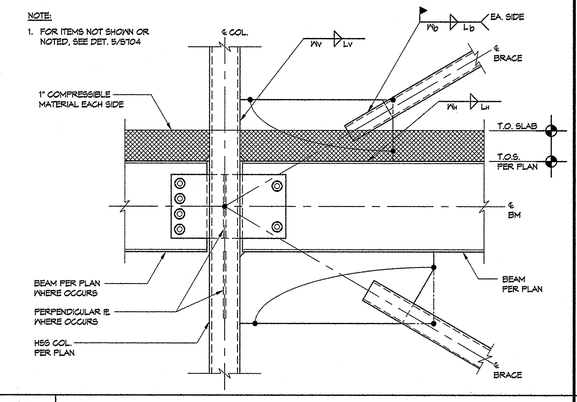

7 TYP. GUSSET PLATE DETAIL AT 2ND FLOOR

1"=1'-0"

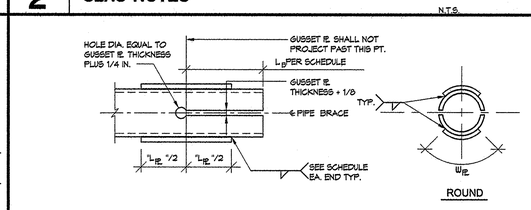

REINFORCING PLATES - ROUND BRACES

BRACE	L_{PL}	W_{PL}	PL SECTION	WELD (1) THICKNESS
3" STD. PIPE	8"	1"	1/4" BENT PL	1/4"
4" STD. PIPE	10"	2"	1/4" BENT PL	1/4"

NOTE:

1. REFERS TO FILLET WELD WHERE INDICATED ON DETAIL.

3 REINFORCING PLATE SCHEDULE

N.T.S.

NOTE:

1. FOR ITEMS NOT SHOWN OR NOTED, SEE 5/S106

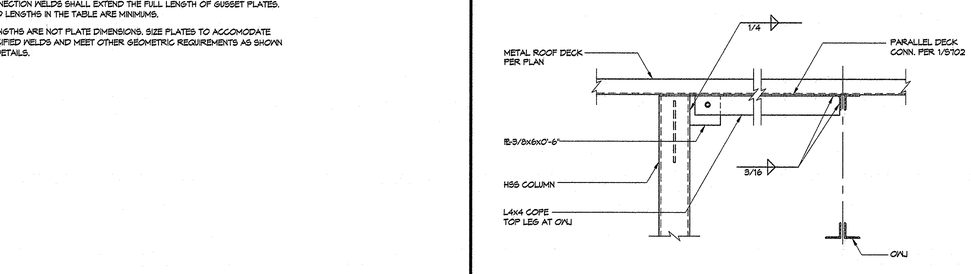

12 OUT-OF-PLANE BRACING OF HSS COL

1"=1'-0"

NOTE:

1. FOR ITEMS NOT SHOWN OR NOTED, SEE DET. 5/S104

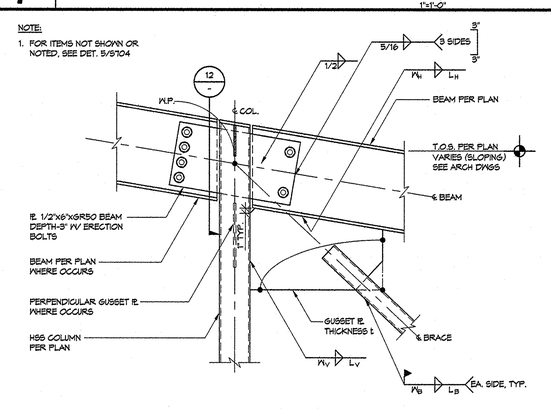

8 GUSSET PLATE DETAIL AT SLOPING ROOF

1"=1'-0"

NOTE:

1. SEE 5/S104 FOR BRACE WELDING.

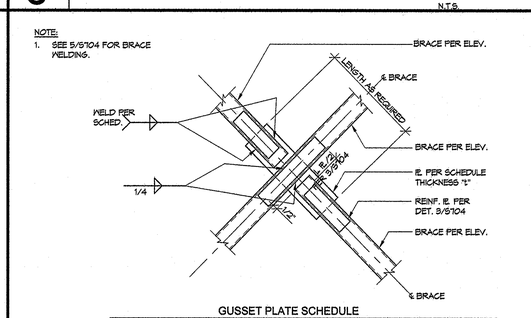

GUSSET PLATE SCHEDULE

BRACE	PLATE	WELD
3" PIPE	1/4"x11 1/2"	3/16 ▷ 9"
4" PIPE	3/8"x11"	1/4 ▷ 9"

4 GUSSET PLATE DETAIL (PIPE)

N.T.S.

PIVOT ARCHITECTURE

STRUCTURAL REGISTERED PROFESSIONAL ENGINEER 65387PE OREGON JAN 23, 2014 JOHN M. BOUNDER Expires: 12/31/15

IBI GROUP

Nova

HOHBACH-LEWIN, INC. STRUCTURAL ENGINEERS
296 East 5th Ave. Eugene, OR 97401
(541) 345-1701, Fax (541) 345-1702
Suite 302

HOWARD RECONCILED SET
EUGENE SCHOOL DISTRICT
700 HOWARD AVE, EUGENE, OREGON 97404
HOWARD ELEMENTARY SCHOOL

STEEL BRACED FRAME DETAILS

PROJECT #:	1305
ISSUE DATE:	10/22/2014
DRAWN:	AMA
CHECKED:	VHB
REVISIONS:	

S704

H-L #9547.1

© 2014 PIVOT ARCHITECTURE

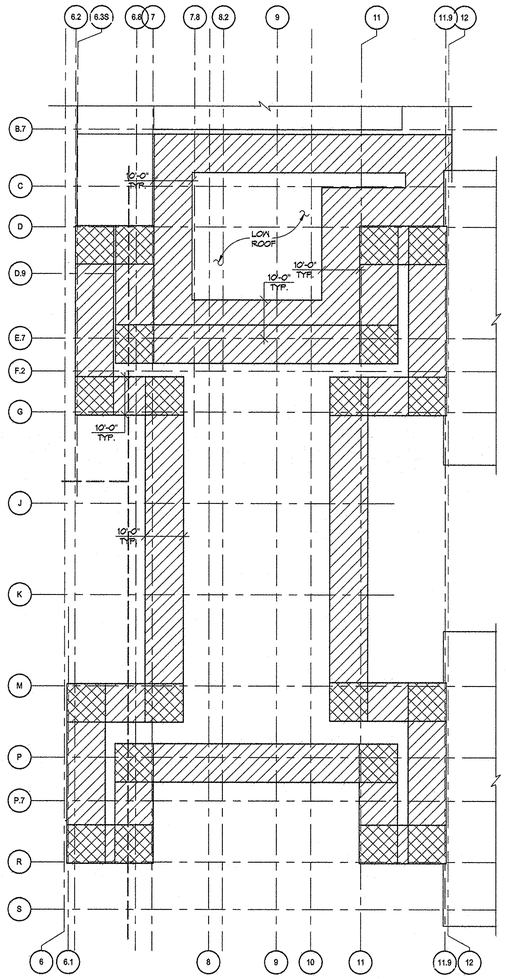

WIND LOADING SCHEDULE (1) (2) (3)				
HATCH	WIND ZONE	P_+ (PSF)	P_- (PSF)	P_{OH} (PSF)
	ZONE 1	16	-38	NA
	ZONE 2	16	-45	-56
	ZONE 3	16	-45	-28

(1) ALL WIND PRESSURES LISTED ARE STRENGTH LEVEL AND SHOULD BE MULTIPLIED BY APPLICABLE LOAD FACTORS WHEN COMBINED W/ ASD LOAD COMBINATIONS.

(2) PLUS AND MINUS SIGNS SIGNIFY PRESSURES ACTING TOWARD AND AWAY FROM THE SURFACES, RESPECTIVELY.

(3) ALL LISTED WIND PRESSURES ARE FOR MEMBERS WITH A MINIMUM SPAN OF 18'-0" FOR MEMBERS SPANNING LESS THAN 18'-0"; THE DESIGN WIND PRESSURE IS HIGHER.

15 WIND LOADING SCHEDULE - MEDIA CENTER

N.T.S.

NOTES:
1. SEE ARCH DWGS FOR FALL PROTECTION ANCHOR TYPES AND LOCATIONS.
2. AT OWJ SUPPORTING FALL PROTECTION ANCHORS, OWJ MFR TO DESIGN FOR THE CRITICAL OF THE FOLLOWING:
   - 4 K-FT STRENGTH LEVEL MOMENT APPLIED TO THE OWJ TOP CHORD.
   - ± 1.5K CONCENTRATED STRENGTH LEVEL LOAD APPLIED TO THE OWJ TOP CHORD
3. FALL PROTECTION ANCHOR ASSEMBLY AND CONNECTIONS TO STRUCTURE DESIGNED FOR 5000# STRENGTH LEVEL MAX LOAD AT TOP OF ANCHOR IN ANY DIRECTION.

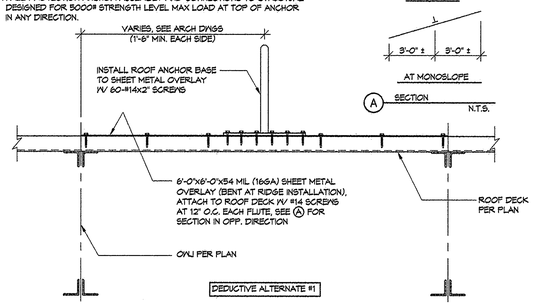

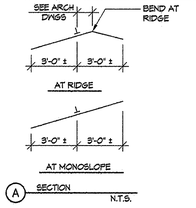

16 FALL PROTECTION ANCHOR AT ROOF

1"=1'-0"

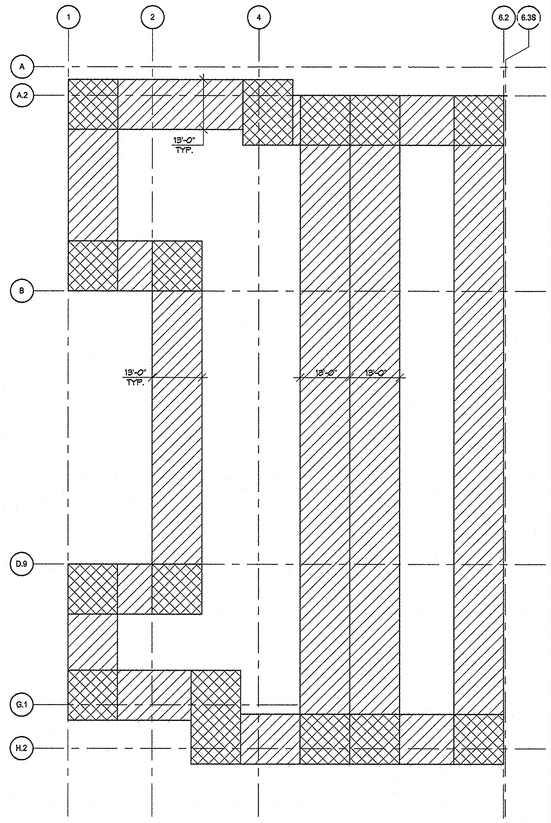

WIND LOADING SCHEDULE (1) (2) (3)				
HATCH	WIND ZONE	P_+ (PSF)	P_- (PSF)	P_{OH} (PSF)
	ZONE 1	18	-36	NA
	ZONE 2	18	-51	-81
	ZONE 3	18	-80	-42

(1) ALL WIND PRESSURES LISTED ARE STRENGTH LEVEL AND SHOULD BE MULTIPLIED BY APPLICABLE LOAD FACTORS WHEN COMBINED W/ ASD LOAD COMBINATIONS.

(2) PLUS AND MINUS SIGNS SIGNIFY PRESSURES ACTING TOWARD AND AWAY FROM THE SURFACES, RESPECTIVELY.

(3) ALL LISTED WIND PRESSURES ARE FOR MEMBERS WITH A MINIMUM SPAN OF 18'-0" FOR MEMBERS SPANNING LESS THAN 18'-0"; THE DESIGN WIND PRESSURE IS HIGHER.

10 WIND LOADING SCHEDULE - GYM/ CAFETERIA

N.T.S.

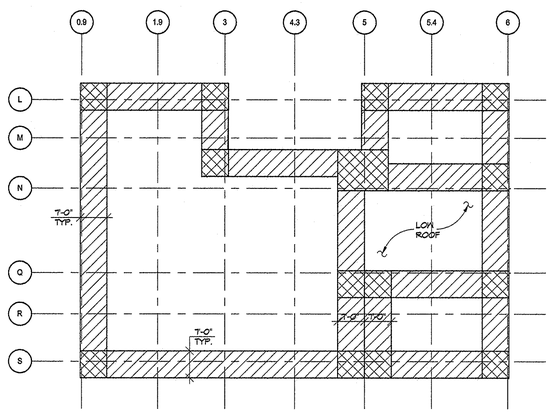

WIND LOADING SCHEDULE (1) (2) (3)				
HATCH	WIND ZONE	P_+ (PSF)	P_- (PSF)	P_{OH} (PSF)
	ZONE 1	18	-36	NA
	ZONE 2	18	-51	-81
	ZONE 3	18	-80	-42

(1) ALL WIND PRESSURES LISTED ARE STRENGTH LEVEL AND SHOULD BE MULTIPLIED BY APPLICABLE LOAD FACTORS WHEN COMBINED W/ ASD LOAD COMBINATIONS.

(2) PLUS AND MINUS SIGNS SIGNIFY PRESSURES ACTING TOWARD AND AWAY FROM THE SURFACES, RESPECTIVELY.

(3) ALL LISTED WIND PRESSURES ARE FOR MEMBERS WITH A MINIMUM SPAN OF 18'-0" FOR MEMBERS SPANNING LESS THAN 18'-0"; THE DESIGN WIND PRESSURE IS HIGHER.

12 WIND LOADING SCHEDULE - CLASSROOM

N.T.S.

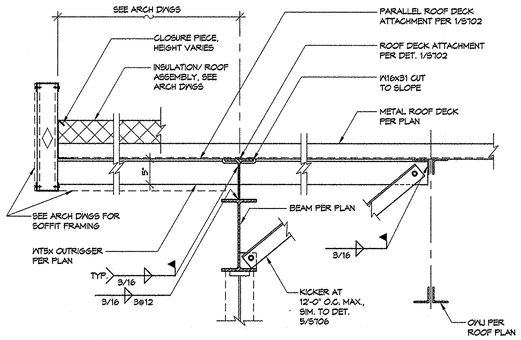

5 GABLE END AT MEDIA CENTER - LINE (P)

1"=1'-0"

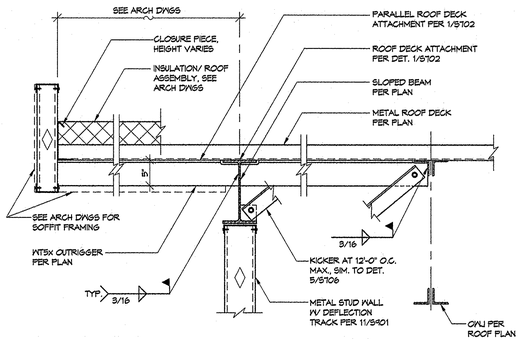

6 GABLE END AT MEDIA CENTER - LINE (P)

1"=1'-0"

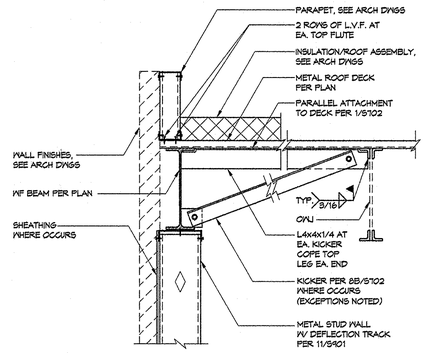

7 GABLED END AT MEDIA "KNUCKLES"

1"=1'-0"

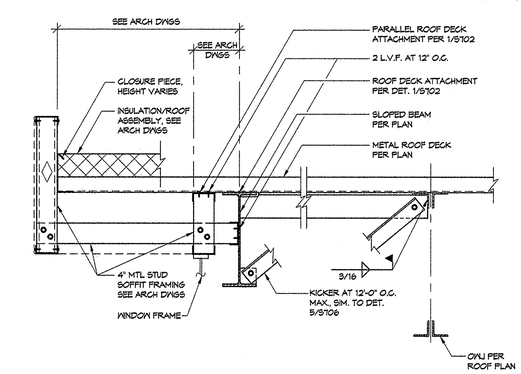

8 GABLE END AT MEDIA CENTER - LINE (E.7)

1"=1'-0"

1. ALL OPEN WEB JOISTS TO BE SJI-SERIES DESIGNATED ON THE FRAMING PLANS; DESIGNED AND MANUFACTURED IN ACCORDANCE WITH THE STEEL JOIST INSTITUTE SPECIFICATION AND 2014 OSSC SECTION 2205.2.
2. CONSTRUCT AND ERECT OPEN WEB JOISTS (OWJ) IN SUCH A MANNER AS TO ALIGN WEB OPENINGS IN ADJACENT MEMBERS TO ALLOW PASSAGE OF MECHANICAL DUCT WORK.
3. MAXIMUM DEFLECTIONS SHALL BE LESS THAN,, U.O.N. (L=SPAN LENGTH)
   A) L/240 FOR DEAD PLUS SNOW LOADS
   B) L/360 FOR SNOW LOADS ONLY
4. THE TOP CHORD OF ALL OWJS SHALL HAVE A MINIMUM THICKNESS OF 3/16 INCH.
5. CAMBER ALL OWJS FOR 90% OF THE CALCULATED DEAD LOAD DEFLECTION
6. GRAVITY LOADS [DEAD AND SNOW (DL,SL)] SHOWN ON THE FRAMING PLANS ARE BASED UPON THE FOLLOWING FLAT LOADS:

LOCATION	DL *	SL	WL ***
SECTOR A	17 PSF	22 PSF	10/S705
MEDIA CENTER	20 PSF **	27 PSF	15/S705
2-STORY SECTION SECTOR B	14 PSF	27 PSF	12/S705
CLASSROOMS	19 PSF	22 PSF	12/S705

* DL INCLUDES 3 PSF MISC. MFR LOADING AND DOES NOT INCLUDE OWJ SELF-WEIGHT

** INCLUDES ADD'L 4 PSF FOR PV PANELS

*** SEE REFERENCED DETAIL FOR WIND LOADING DIAGRAM AND NOTES

7. ASD LEVEL UNIFORM DEAD AND SNOW LOADS IN POUNDS PER LINEAL FOOT (PLF) ARE INDICATED ON THE ROOF FRAMING PLANS THUS: (DL/SL).
8. SEE DETAIL 4/S705 FOR OWJ SCISSOR TRUSS PROFILE AT GYM/ CAFETERIA. SEE DETAIL 3/S705 FOR OWJ PROFILE AT MEDIA CENTER. SEE ARCHITECTURAL BUILDING SECTIONS FOR ALL STANDARD SJI SERIES OWJ PROFILES.
9. UNLESS OTHERWISE NOTED ON PLAN, THUS: PAXIAL = XX KIPS; ALL OWJ TO BE DESIGNED FOR THE FOLLOWING STRENGTH LEVEL TOP CHORD
   AXIAL LOADS: KLH SERIES OWJ 3000# (SEISMIC); 3000# (WIND)
   DLH SERIES OWJ 8000# (SEISMIC); 8000# (WIND)
10. ALL OWJ BOTTOM CHORDS SHALL BE DESIGNED FOR A MINIMUM OF 500# VERTICAL POINT LOAD (WORST CASE LOADING).
11. COORDINATE ACTUAL OWJ MEMBER LENGTHS WITH THE STRUCTURAL AND ARCHITECTURAL PLANS AND DETAILS.
12. SUBMIT COMPLETE SHOP DRAWINGS AND DESIGN CALCULATIONS PREPARED AND SIGNED BY A STATE OF OREGON REGISTERED PROFESSIONAL OR STRUCTURAL ENGINEER TO THE ARCHITECT AND OBTAIN HIS/HER FINAL REVIEW PRIOR TO COMMENCEMENT OF FABRICATION. THESE DESIGN CALCULATIONS SHALL CLEARLY SHOW ALL APPLIED DEAD, LIVE, SNOW, WIND AND SEISMIC LOADS IN EACH MEMBER DESIGN AS WELL AS MEMBER STRESSES, DEFLECTIONS AND WELDING. DESIGN CALCULATIONS AND SHOP DRAWINGS SHALL ALSO INCLUDE BRIDGING REQUIREMENTS AND SPECIFICATIONS.
13. SEE OTHER DRAWINGS (I.E. MECHANICAL, ARCHITECTURAL, ETC.) FOR ADDITIONAL LOADS TO BE SUPPORTED BY OWJ MEMBERS.
14. DESIGN, FABRICATION AND ERECTION SHALL COMPLY WITH THE REQUIREMENTS OF THE AMERICAN INSTITUTE OF STEEL CONSTRUCTION (AISC) AND THE STEEL JOIST INSTITUTE (SJI) "STANDARD SPECIFICATION FOR OPEN WEB JOIST AND OPEN WEB STEEL GIRDERS".

2 OWJ TRUSS NOTES

NO SCALE

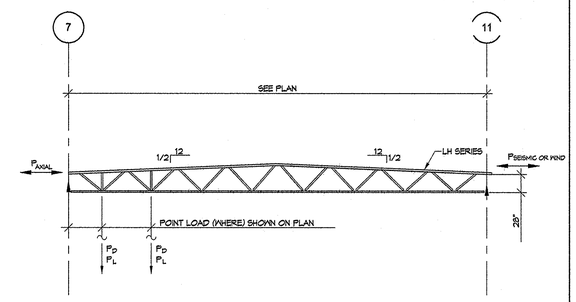

NOTE:
1. P_{AXIAL} (WIND OR SEISMIC) PER DETAIL 2/S705 (NOTE 9) UNLESS OTHERWISE NOTED ON FRAMING PLANS.
2. P_D, P_L DENOTES DEAD AND LIVE LOAD POINT LOADS AS NOTED ON PLAN.

3 STEEL OWJ PROFILE AT MEDIA CENTER

1/8"=1'-0"

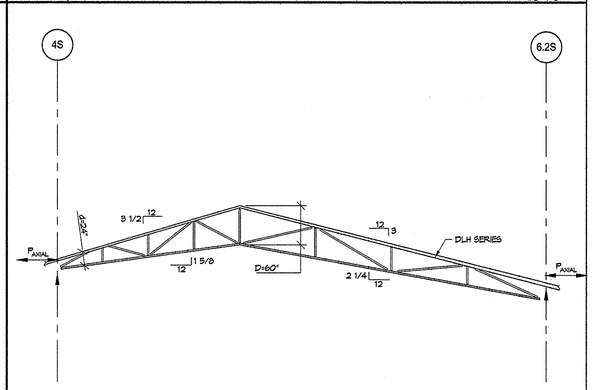

4 STEEL OWJ SCISSOR TRUSS PROFILE AT GYM/CAFETERIA

1/8"=1'-0"

PIVOT ARCHITECTURE

STRUCTURAL REGISTERED PROFESSIONAL ENGINEER 65387PE OREGON JAN 23, 2007 VIKKI N. BOURCIER Expires: 12-31-15

IBI GROUP

Iowa

HOHBACH-LEWIN, INC. STRUCTURAL ENGINEERS
Suite 302
Eugene, OR 97401
(541) 345-1701, Fax (541) 345-1702

HOWARD RECONCILED SET
EUGENE SCHOOL DISTRICT 4J
700 HOWARD AVE, EUGENE, OREGON 97404
HOWARD ELEMENTARY SCHOOL

OWJ PROFILES

PROJECT #:	1335
ISSUE DATE:	10/22/2014
DRAWN:	AMA
CHECKED:	VNB
REVISIONS:	

S705

H-L #9547.1

© 2014 PIVOT ARCHITECTURE

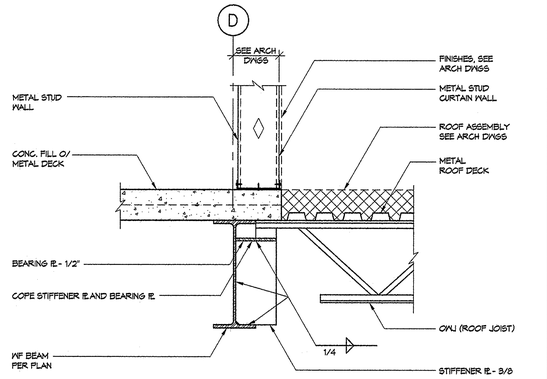

13 SECTION AT 2ND FLOOR/ LOW ROOF 1"=1'-0"

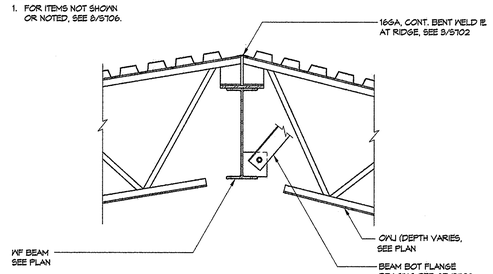

9 OWJ TO WF RIDGE BEAM AT CLASSROOMS 1"=1'-0"

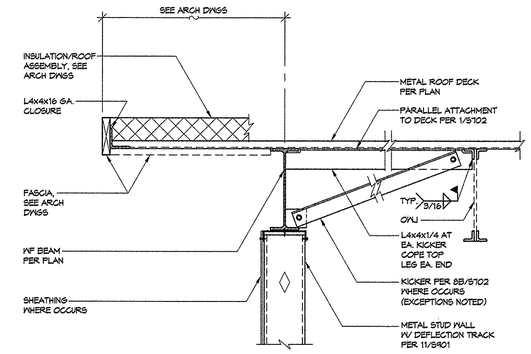

5 GABLED END 1"=1'-0"

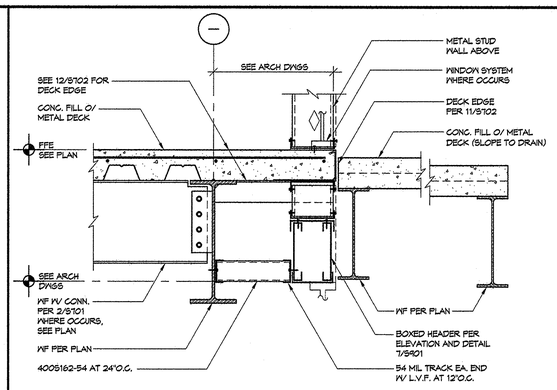

1 SECTION AT BALCONY 1"=1'-0"

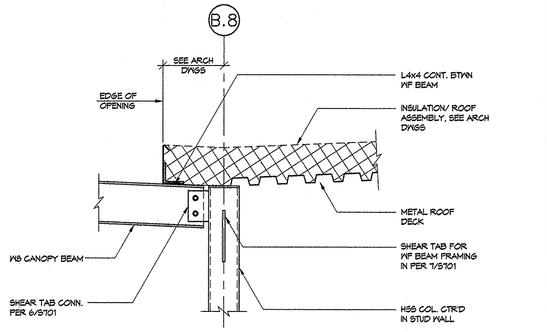

14 SECTION AT ADMIN/ CANOPY ROOF 1"=1'-0"

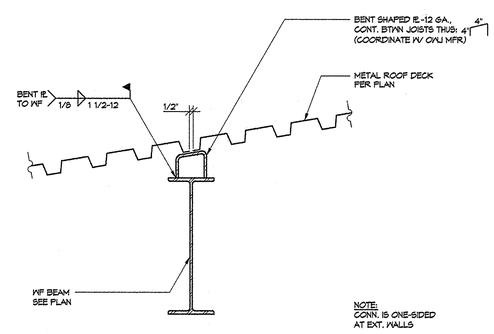

10 BLOCKING AT OWJ SUPPORT BEAMS-ROOF 1 1/2"=1'-0"

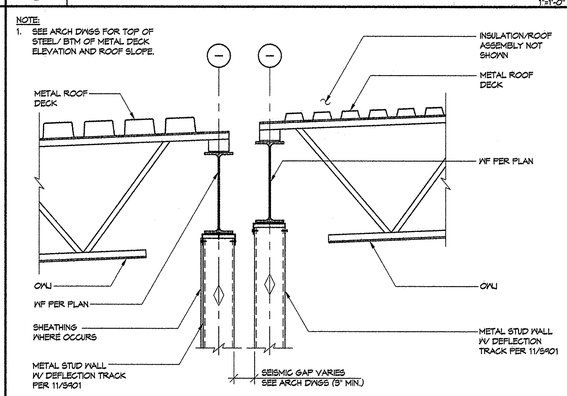

6 ROOF SECTION AT SEISMIC JOINT 1"=1'-0"

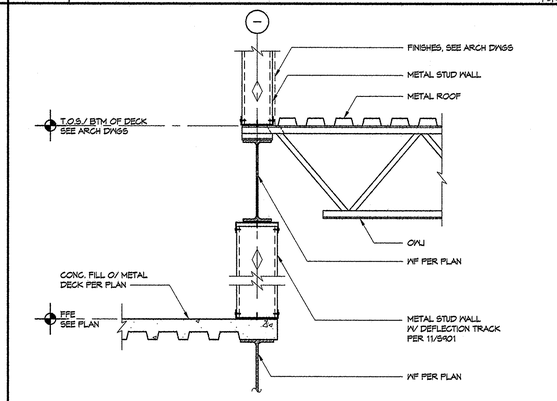

2 SECTION AT LOW ROOF / MECH. PLATFORM 1"=1'-0"

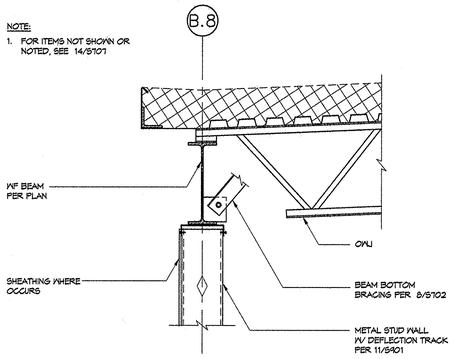

15 EXTERIOR WALL SECTION AT ADMINISTRATION 1"=1'-0"

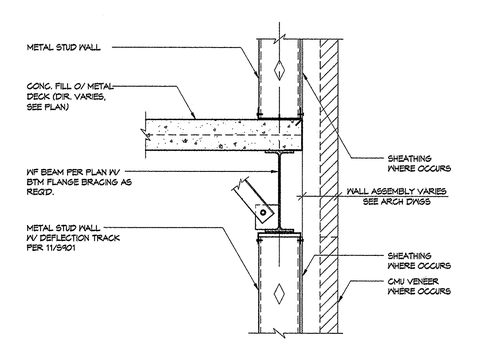

11 2ND FLOOR SECTION AT EXT. WALL 1"=1'-0"

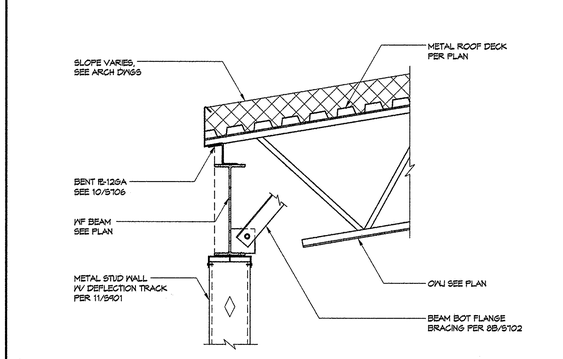

7 OWJ TO WF BEAM AT EXT. WALL 1"=1'-0"

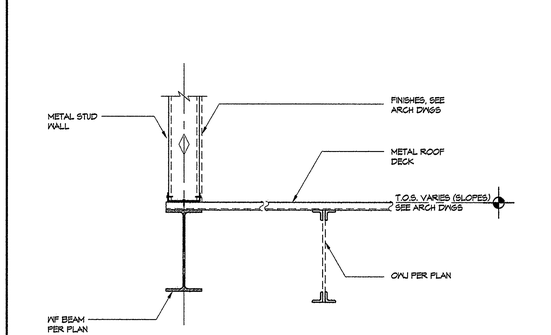

3 SECTION AT LOW ROOF 1"=1'-0"

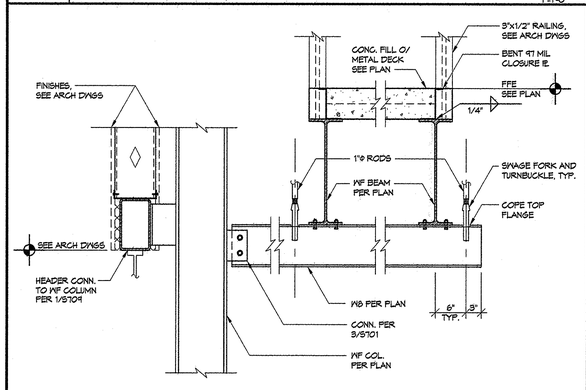

16 SECTION AT BRIDGE 1"=1'-0"

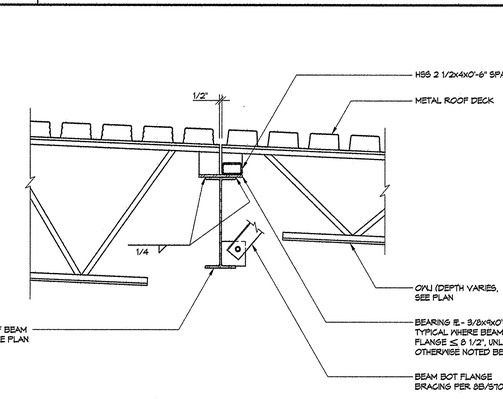

12 OWJ TO WF BEAM AT MEDIA CENTER 1"=1'-0"

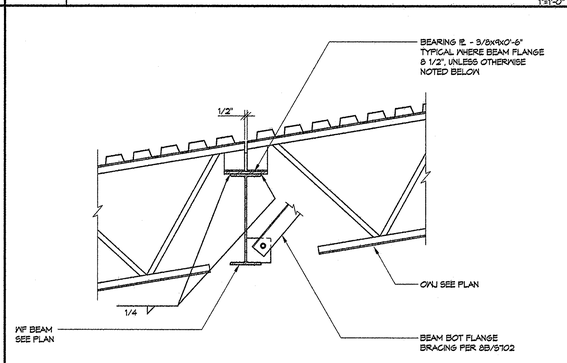

8 OWJ TO WF BEAM AT CLASSROOM 1"=1'-0"

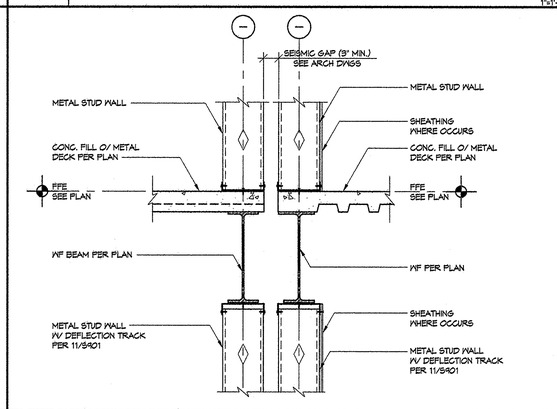

4 SECTION AT 2ND FLOOR/ SEISMIC GAP 1"=1'-0"

PIVOT ARCHITECTURE

STRUCTURAL ENGINEERED PROFESSIONAL ENGINEER 65387PE OREGON JAN 28, 2014 VIKRI H. BOURNIER Expires: 12-31-15

IBI GROUP

HOHBACH-LEWIN, INC. STRUCTURAL ENGINEERS 295 East 8th Ave. Eugene, OR 97401 (541) 344-1701, Fax (541) 349-1702

HOWARD RECONCILED SET

EUGENE SCHOOL DISTRICT 4J
700 HOWARD AVE, EUGENE, OREGON 97404
HOWARD ELEMENTARY SCHOOL

STEEL DETAILS

PROJECT #:	1339
ISSUE DATE:	10/20/2014
DRAWN:	AMA
CHECKED:	VHB
REVISIONS:	

S706

H-L #9547.1

© 2014 PIVOT ARCHITECTURE

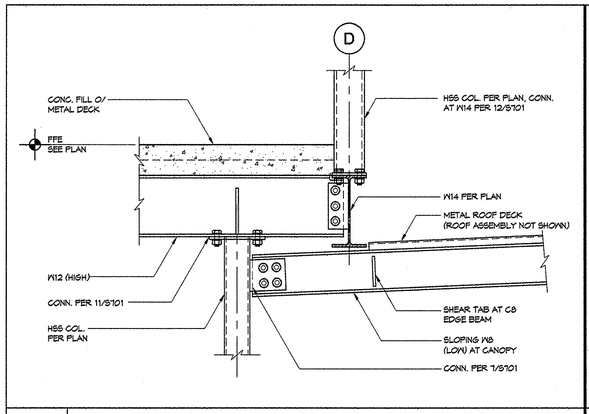

13 2ND FLOOR SECTION AT ENTRY VESTIBULE

1"=1'-0"

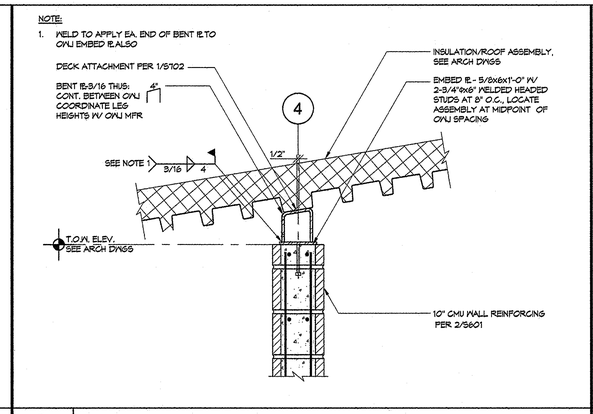

9 OWJ TO INTERIOR CMU WALL - SECTOR A

1"=1'-0"

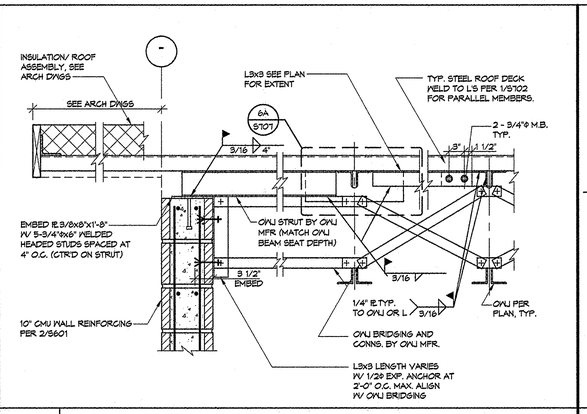

5 ROOF AT GABLED END - SECTOR A

1"=1'-0"

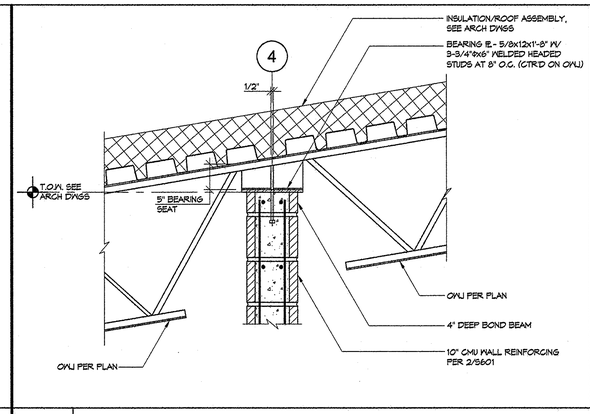

1 OWJ TO INTERIOR CMU WALL - SECTOR A

1"=1'-0"

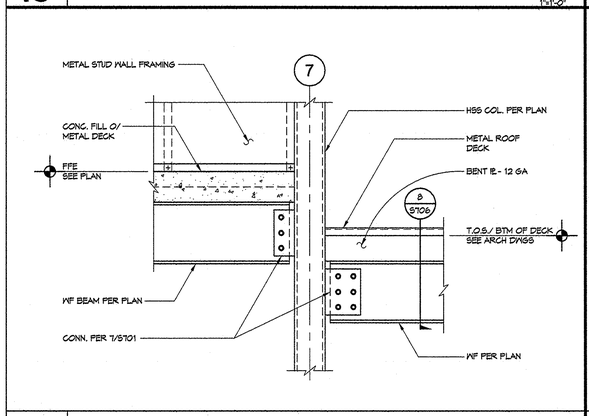

14 2ND FLOOR/LOW ROOF SECTION AT ADMINISTRATION

1"=1'-0"

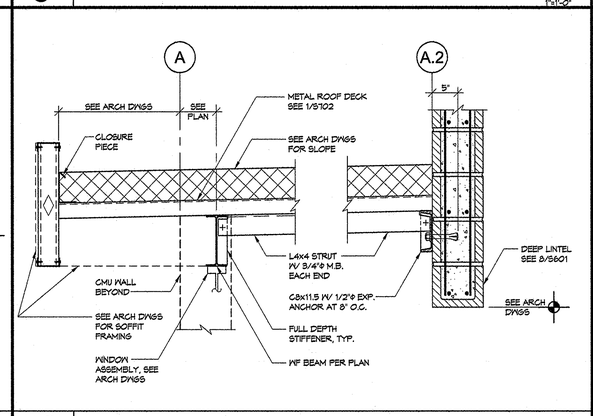

10 SECTION AT MUSIC ROOM LOW ROOF

1"=1'-0"

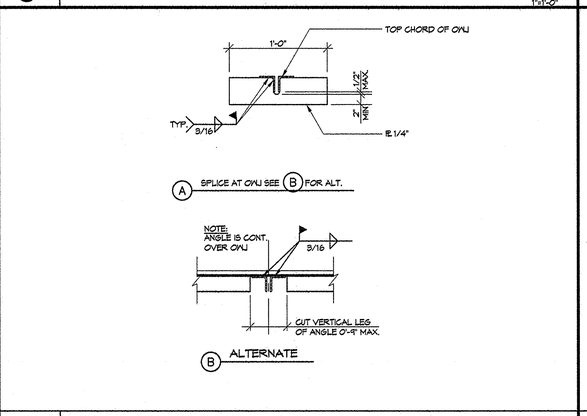

6 STRUT SPLICE AT OWJ - SECTOR A

1"=1'-0"

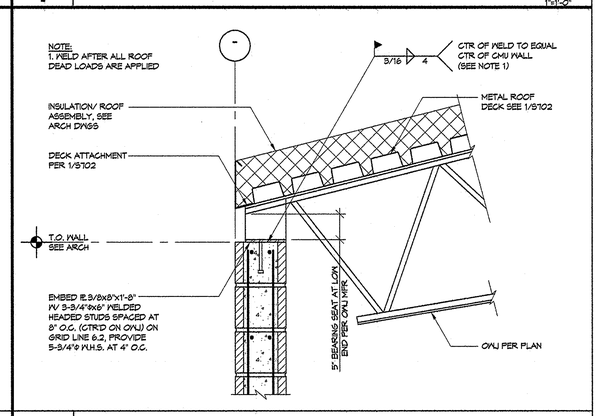

2 OWJ CONN. AT CMU WALL

1"=1'-0"

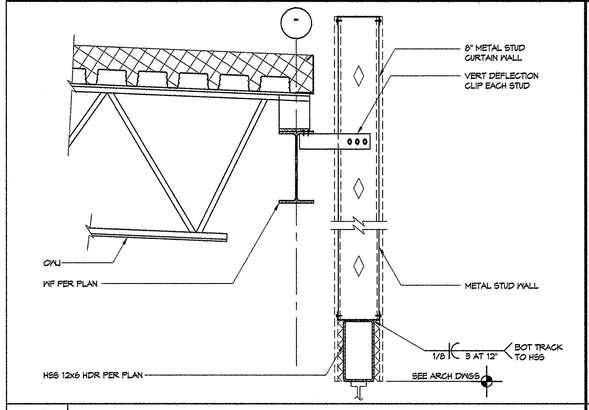

15 SECTION AT MEDIA CENTER

1"=1'-0"

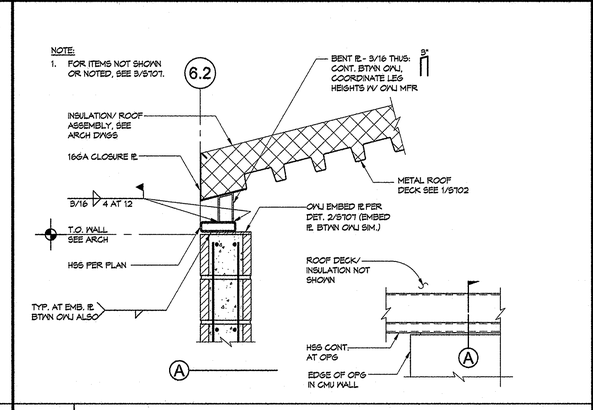

11 HSS AT SKYLIGHT OPENING - SECTOR A EAST ELEVATION

1"=1'-0"

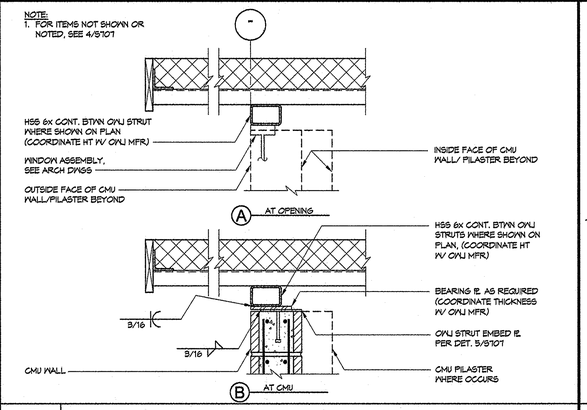

7 ROOF SECTION ON SOUTH ELEVATION - SECTOR A

1"=1'-0"

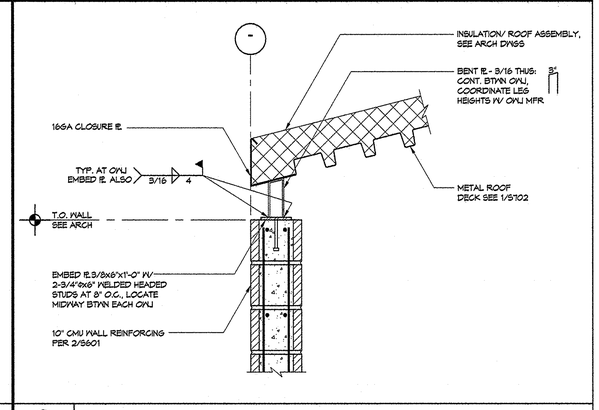

3 ROOF DECK CONN. TO CMU WALL - SECTOR A

1"=1'-0"

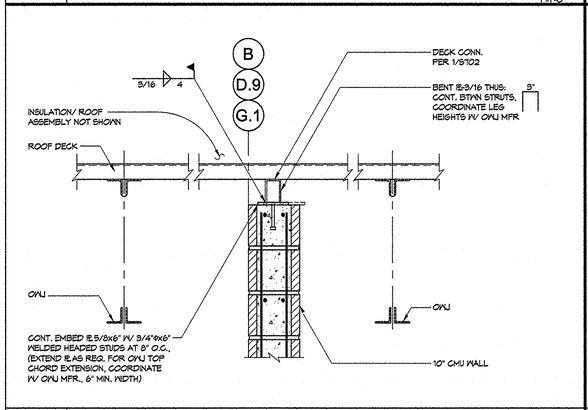

16 CONT. EMBED PLATE - SECTOR A LINES (B) (D.9) AND (G.1)

1"=1'-0"

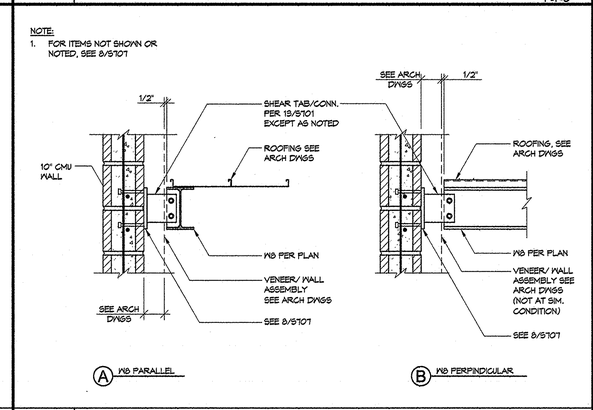

12 LOW ROOF CONN. AT BUILDING

1"=1'-0"

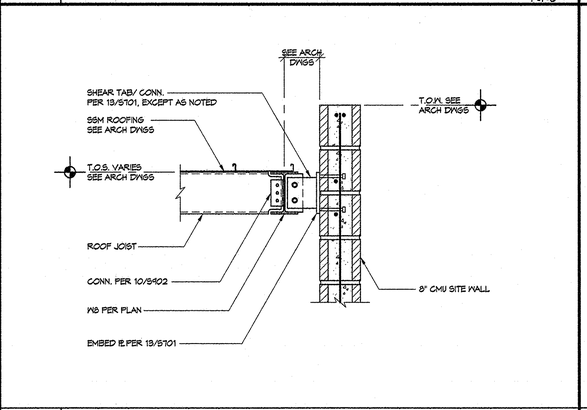

8 WF BEAM CONN. AT CMU SITE WALL

1"=1'-0"

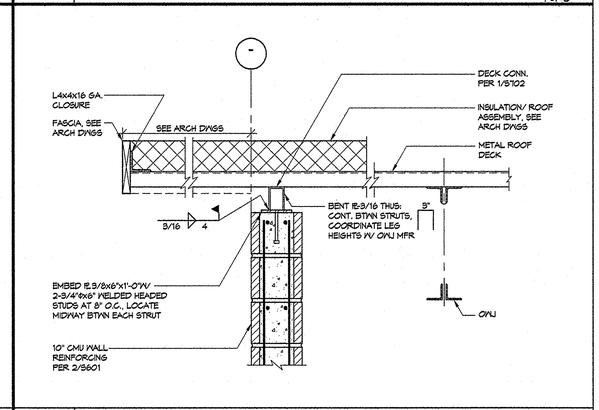

4 ROOF AT GABLED END - SECTOR A

1"=1'-0"

PIVOT ARCHITECTURE

STRUCTURAL REGISTERED PROFESSIONAL ENGINEER 65387PE OREGON JAN 23, 2018 VIKKI N. BOURCIER Expires: 12-31-18

IBI GROUP

HOHBACH-LEWIN, INC. STRUCTURAL ENGINEERS 2992 Oakmont Way, Suite 302 Eugene, OR 97401 (541) 343-1701, Fax (541) 343-1702

HOWARD RECONCILED SET

EUGENE SCHOOL DISTRICT 700 HOWARD AVE. EUGENE, OREGON 97404

HOWARD ELEMENTARY SCHOOL

STEEL DETAILS

PROJECT #:	1336
ISSUE DATE:	10/26/2014
DRAWN:	AMA
CHECKED:	VNB

REVISIONS:

S707

H-L #8547.1

© 2014 PIVOT ARCHITECTURE

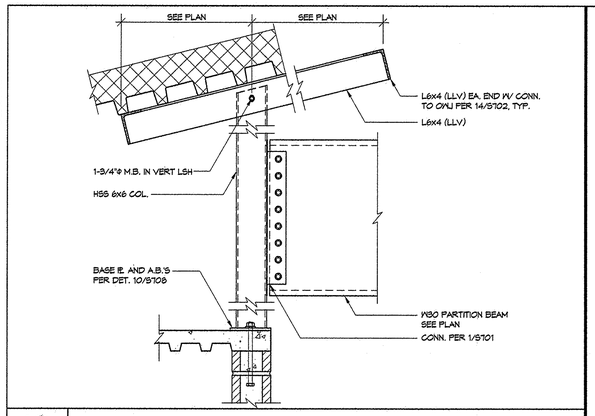

13 PARTITION BEAM CONNECTION TO HSS COLUMN 1"=1'-0"

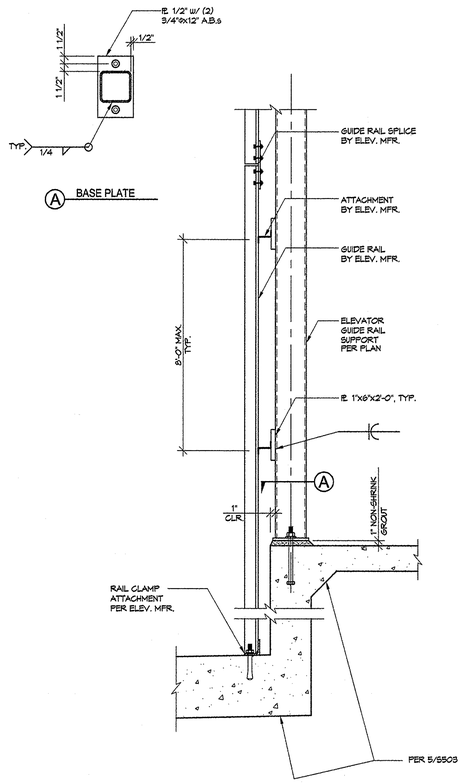

10 ELEVATOR GUIDE RAIL AT FOUNDATION N.T.S.

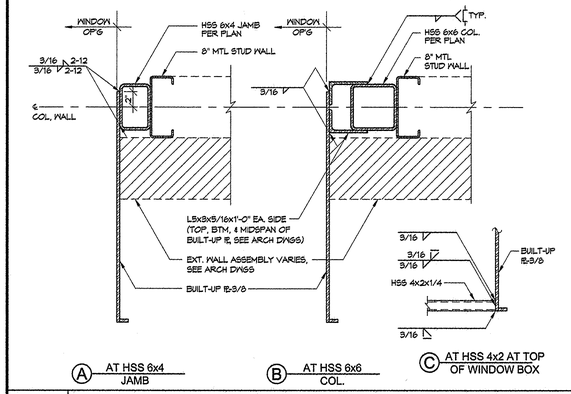

5 WINDOW BOX CONNECTION 1 1/2"=1'-0"

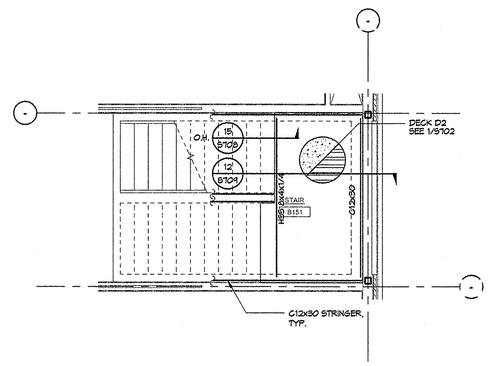

1 TYPICAL STAIR LANDING PLAN - CLASSROOM 1/4"=1'-0"

NOTE:
1. FLOOR DECK AND WALL FRAMING NOT SHOWN

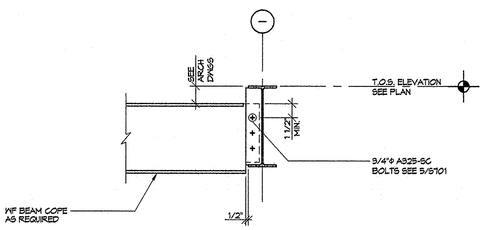

14 DROPPED BEAM AT WF SUPPORT-BALCONY DEDUCTIVE ALT. #5 1"=1'-0"

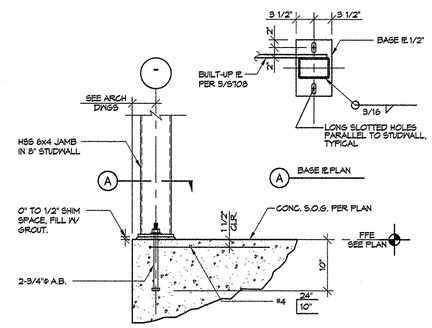

6 HSS JAMB CONN. TO FOUNDATION 1"=1'-0"

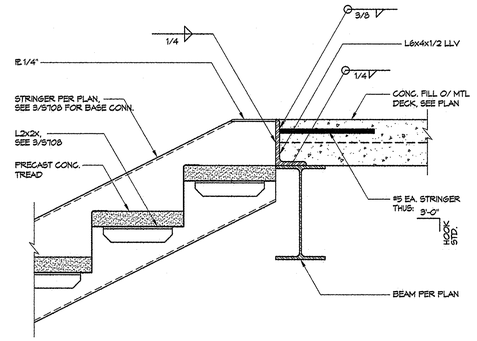

2 TYP. DOWN STAIR STRINGER ATTACHMENT TO STRUCTURE 1 1/2"=1'-0"

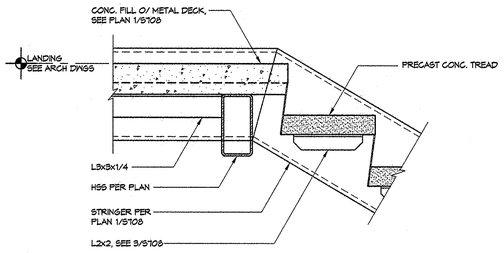

15 STAIR STRINGER AT LANDING 1 1/2"=1'-0"

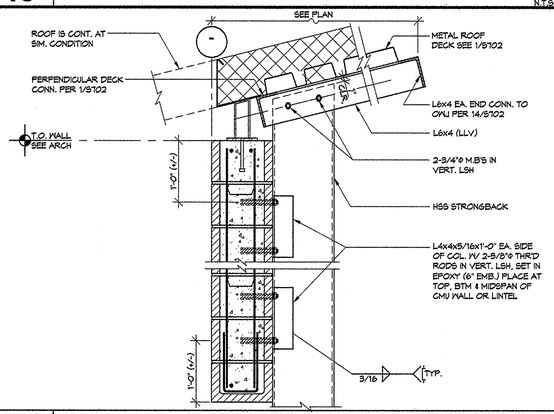

11 HSS STRONG-BACK CONN. AT ROOF 1"=1'-0"

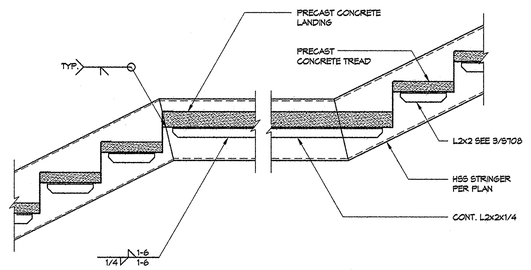

7 INTERMEDIATE STAIR LANDING - MEDIA CENTER 1"=1'-0"

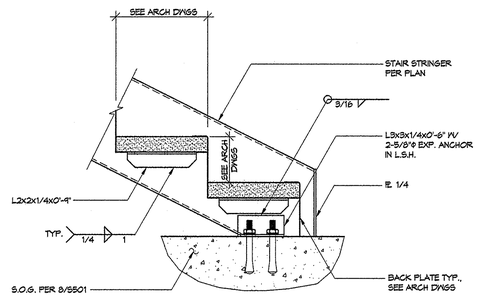

3 TYP. STAIR AT BASE 1 1/2"=1'-0"

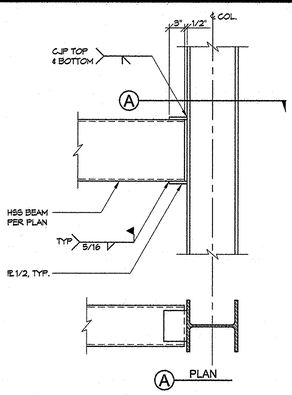

16 HSS BEAM TO WF COLUMN N.T.S.

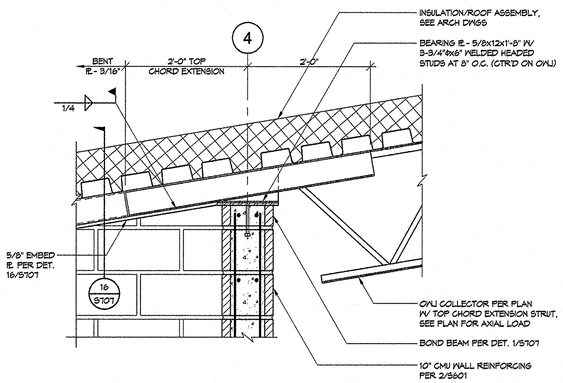

12 COLLECTOR TOP CHORD EXTENSION - LINES B, D.9 AND G.1 1"=1'-0"

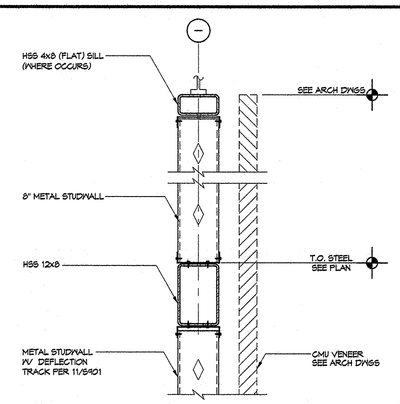

8 HSS BEAM AT FLOOR OPENING 1"=1'-0"

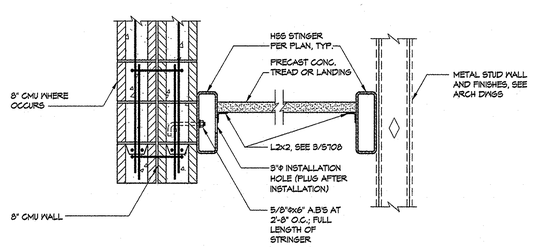

4 SECTION AT MEDIA CENTER STAIR 1"=1'-0"

PIVOT ARCHITECTURE

STRUCTURAL REGISTERED PROFESSIONAL ENGINEER 65387PE OREGON JAN 23, 2007 VIKRI H. BOURCIER Expires: 12-31-15

IBI GROUP

HOHBACH-LEWIN, INC. STRUCTURAL ENGINEERS
256 East 8th Ave. Eugene, OR 97401 (541) 343-1701, Fax (541) 343-1702
Suite 302

HOWARD RECONCILED SET
EUGENE SCHOOL DISTRICT 4J
700 HOWARD AVE. EUGENE, OREGON 97404
HOWARD ELEMENTARY SCHOOL

STAIR LANDING PLANS AND DETAILS

PROJECT #:	1338
ISSUE DATE:	10/30/2014
DRAWN:	AMA
CHECKED:	VHB

REVISIONS:

S708

H-L #9547.1

© 2014 PIVOT ARCHITECTURE

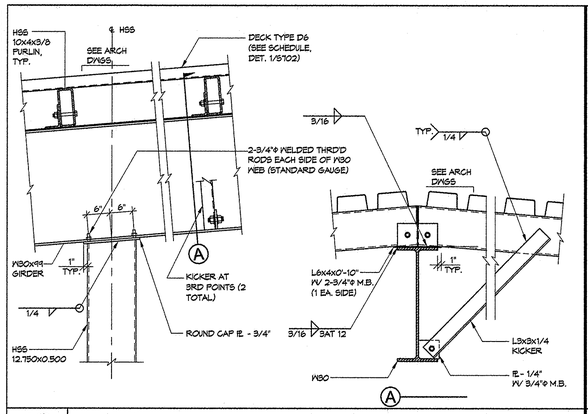

13 W30 BEAM TO COLUMN - COVERED PLAY STRUCTURE
3/4"=1'-0"

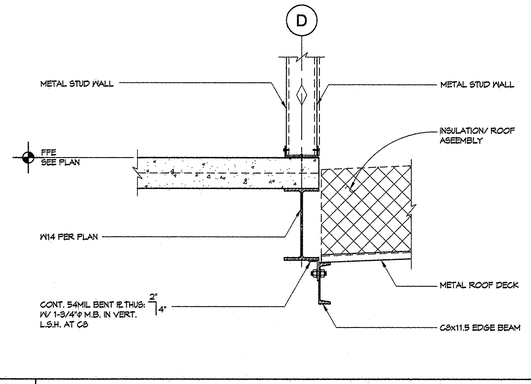

9 2ND FLOOR/ LOW ROOF SECTION AT ENTRY VESTIBULE
1"=1'-0"

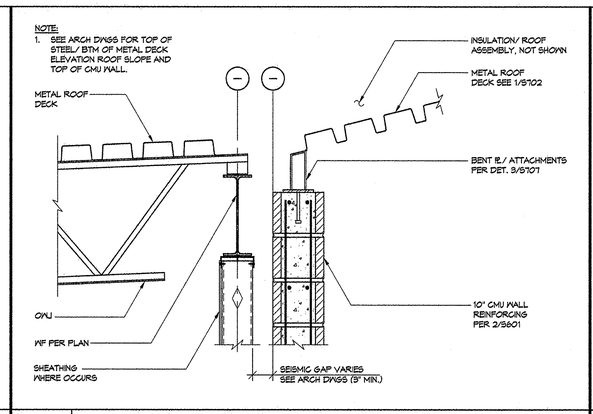

5 ROOF SECTION AT SEISMIC JOINT- SECTOR A
1"=1'-0"

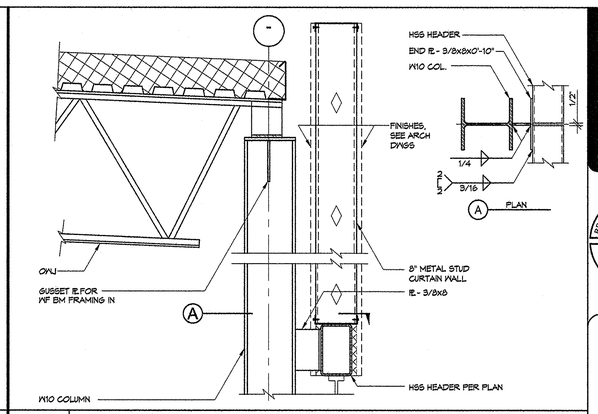

1 HSS HEADER CONN. AT WF COL.
1"=1'-0"

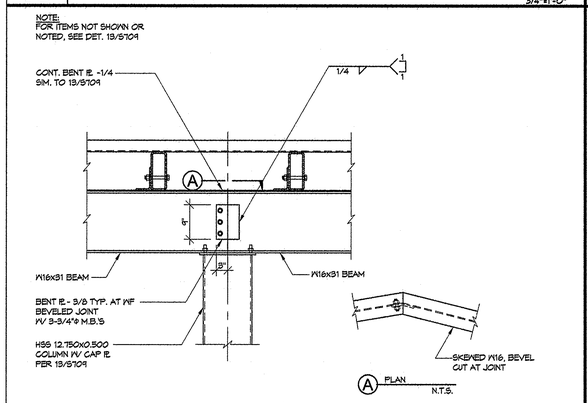

14 W16 BEAM TO COLUMN - COVERED PLAY STRUCTURE
3/4"=1'-0"

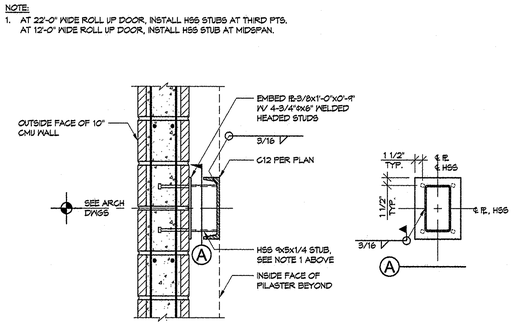

10 ROLL UP DOOR SUPPORT - SECTOR A
3/4"=1'-0"

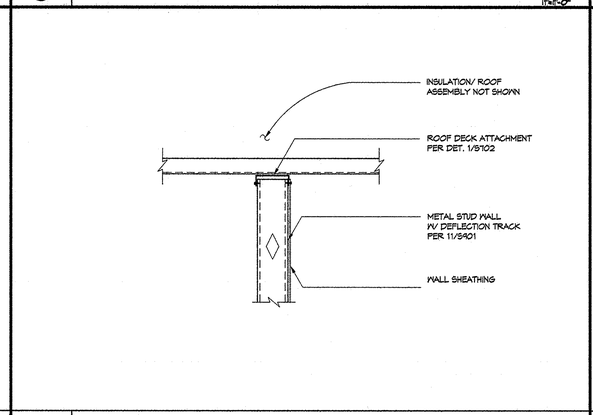

6 SHEARWALL TO ROOF DECK - SECTOR B
1"=1'-0"

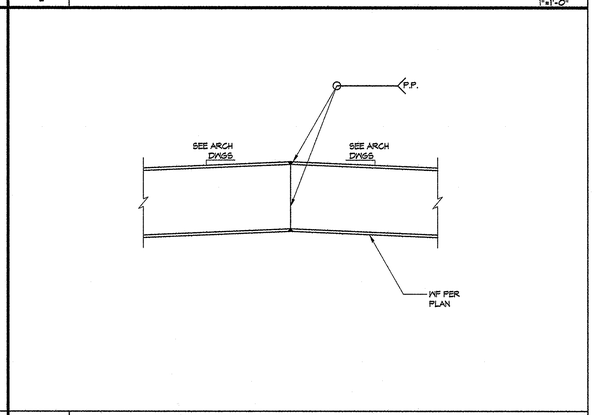

2 BENT WF BEAM AT MEDIA CENTER
1"=1'-0"

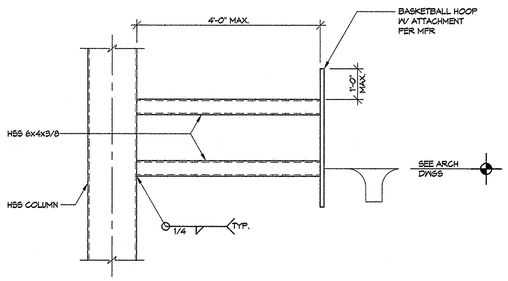

15 BASKETBALL HOOP SUPPORT - COVERED PLAY STRUCTURE
3/4"=1'-0"

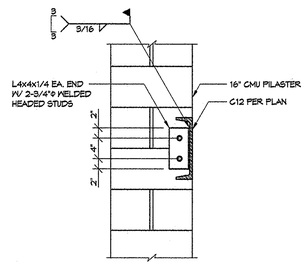

11 ROLL UP DOOR AT PILASTER - SECTOR A
1"=1'-0"

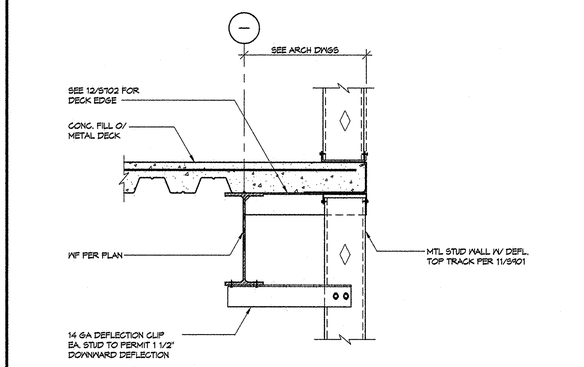

7 SECTION AT BALCONY HEADER
1"=1'-0"

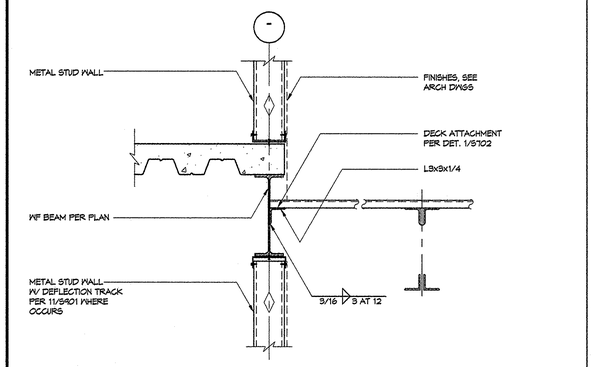

3 2ND FLOOR/LOW ROOF SECTION - ADMINISTRATION LINES ⑦ & ⑪
1"=1'-0"

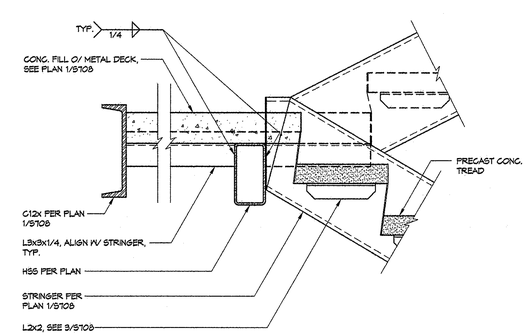

12 INTERIOR STAIR STRINGER AT LANDING
1 1/2"=1'-0"

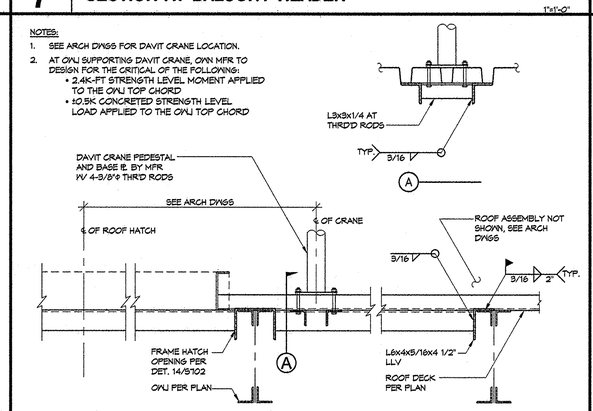

8 DAVIT CRANE AT ROOF
1"=1'-0"

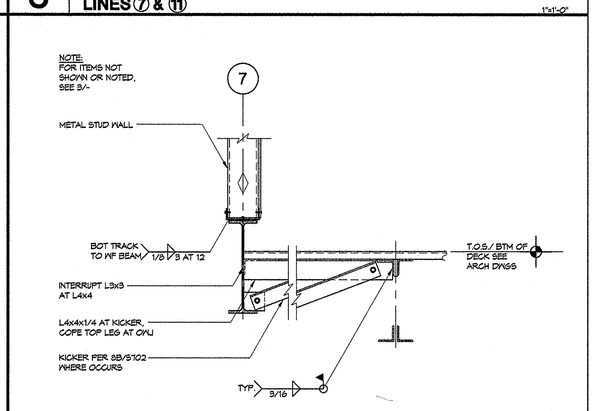

4 2ND FLOOR/LOW ROOF SECTION AT FLOOR OPENING
1"=1'-0"

16 — 3/4"=1'-0"

PIVOT ARCHITECTURE

STRUCTURAL REGISTERED PROFESSIONAL ENGINEER 65387PE OREGON JAN 23, 2007 VIVEK H. BOURICHER Expires: 12-31-18

IBI GROUP

HOHBACH-LEWIN, INC. STRUCTURAL ENGINEERS
Suite 302
Eugene, OR 97401
(541) 344-1701, Fax (541) 349-1702

HOWARD RECONCILED SET
EUGENE SCHOOL DISTRICT 4J
700 HOWARD AVE. EUGENE, OREGON 97404
HOWARD ELEMENTARY SCHOOL

STEEL DETAILS

PROJECT #:	1336
ISSUE DATE:	11/20/2014
DRAWN:	AMA
CHECKED:	VHB
REVISIONS:	

S709

H-L #9547.1

© 2014 PIVOT ARCHITECTURE

NOTES:
1. FOR 6" STUD USE 2 1/2x54 MIL W/ 1/2" FLANGE HORIZONTAL BRIDGING. FOR 3 5/8" OR 4" STUD USE 1 1/2"x54 MIL W/ 1/2" FLANGE HORIZONTAL BRIDGING.
2. STUD BLOCKING PER 6/S901 MAY BE USED IN PLACE OF BRIDGING

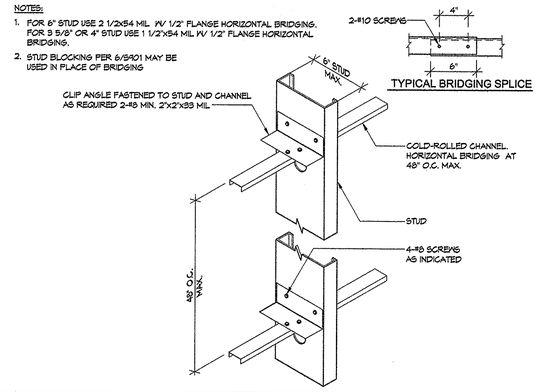

5 TYPICAL BRIDGING

N.T.S.

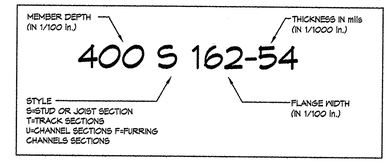

MINIMUM DELIVERABLE THICKNESS (MILS)	GAUGE	DESIGN THICKNESS (INCHES)
18	25	.0188
27	22	.0283
33	20	.0346
43	18	.0451
54	16	.0566
68	14	.0713
97	12	.1017

1 TYPICAL LIGHT GAUGE STUD DESIGNATIONS

NOTES:
1. STUDS SHOWN IN THE TABLES ABOVE ARE MINIMUM REQUIRED (SEE NOTE 2 FOR EXCEPTION). SEE ARCHITECTURAL DRAWINGS FOR ADDITIONAL REQUIREMENTS.
2. AT STRUCTURAL SHEARWALLS, PROVIDE 800S162-54 STUDS AT 24" O.C. OR 600S162-54 STUDS AT 24" O.C. WHEN SHOWN ON THE ARCHITECTURAL DRAWINGS AS A 6" WALL.

EXTERIOR WALL STUD - NON BEARING PARTITION (2)

WALL HEIGHT	STUD SECTION	SPACING
∠ 14'	800S162-43	24" O.C.
14'-20'	800S162-54	24" O.C.
20'-24'	800S200-54	16" O.C.

INTERIOR WALL STUD - NON BEARING PATTITION (2)

WALL HEIGHT	STUD SECTION	SPACING
∠ 14'	350S162-33 400S162-33 600S162-33 800S162-33	24" O.C. 24" O.C. 24" O.C. 24" O.C.
∠ 20'	400S162-54 600S162-33 800S162-33	16" O.C. 24" O.C. 24" O.C.

2 STUD SCHEDULE - NON BEARING

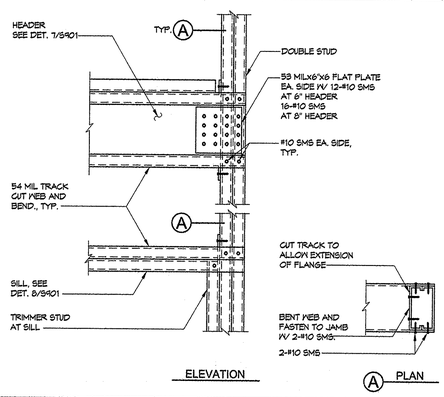

3 TYPICAL HEAD AND SILL DETAILS AT JAMB NON BEARING WALL

1 1/2"=1'-0"

NOTE:
1. SEE LIGHT GAUGE NOTES 5001 AND STUD SCHEDULE 2/S901.

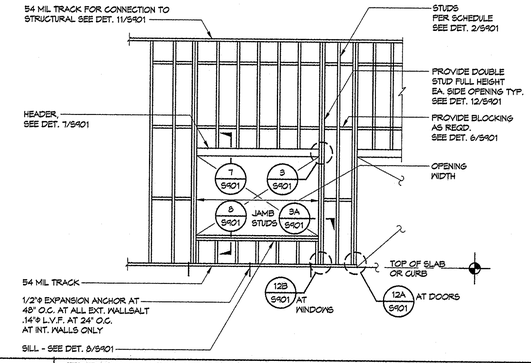

4 TYPICAL LIGHT GAUGE STUD WALL FRAMING - NON STRUCTURAL

N.T.S.

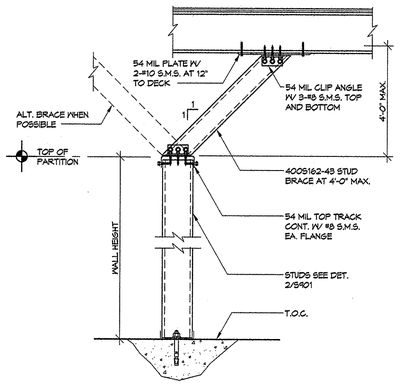

14 TYPICAL PARTITION BRACE

1"=1'-0"

NOTE:
1. IF HOLES EXCEED THESE PARAMETERS, PROVIDE REINFORCING PER DET. 16/S901

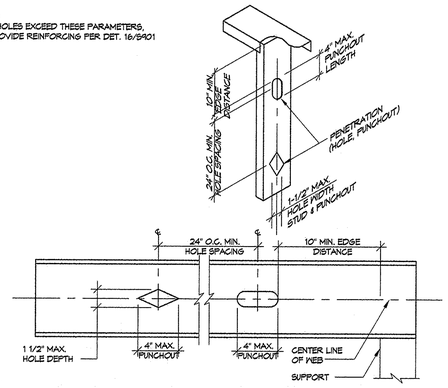

15 TYPICAL ALLOWABLE HOLES IN STUD WEB

N.T.S.

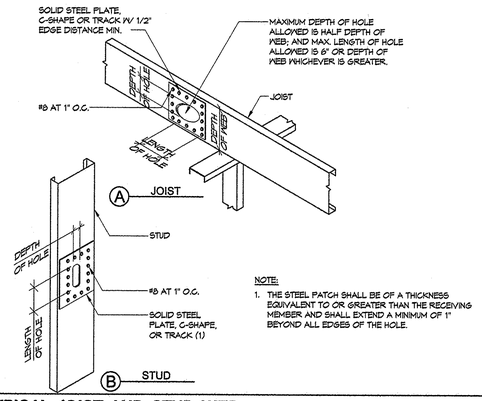

NOTE:
1. THE STEEL PATCH SHALL BE OF A THICKNESS EQUIVALENT TO OR GREATER THAN THE RECEIVING MEMBER AND SHALL EXTEND A MINIMUM OF 1" BEYOND ALL EDGES OF THE HOLE.

16 TYPICAL JOIST AND STUD WEB HOLES REINFORCING

N.T.S.

9

NOTE:
1. PROVIDE BLOCKING PER DET. 6/S901 IF NO SHEATHING PRESENT ONE OR BOTH SIDES STUDS.

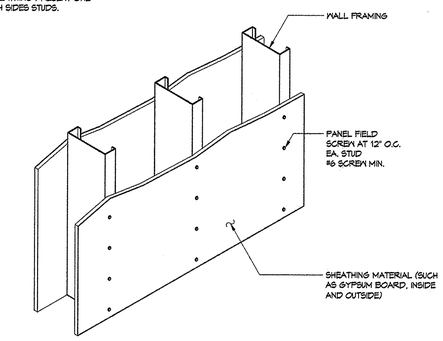

10 TYPICAL STUD BRACING WITH SHEATHING

N.T.S.

NOTES:
1. DO NOT ATTACH WALL SHEATHING TO SLIP TRACK.
2. PROVIDE BRIDGING WITHIN 12" OF TRACK.

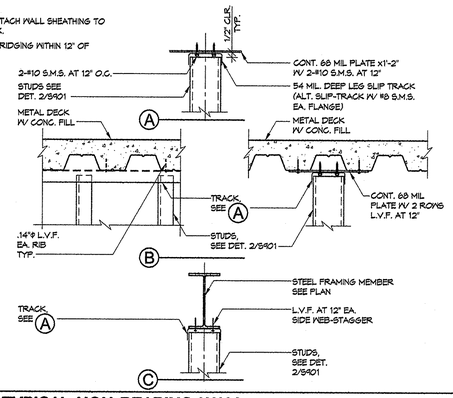

11 TYPICAL NON-BEARING WALL TOP CONNECTION

N.T.S.

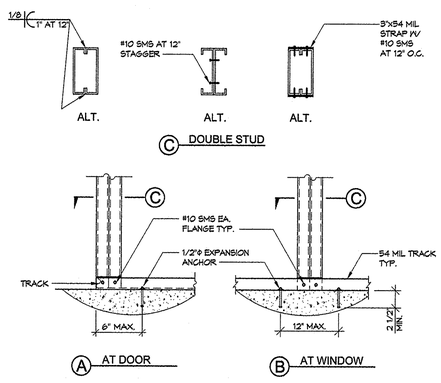

12 TYPICAL DOUBLE STUD JAMB BASE SIMILAR AT TOP

N.T.S.

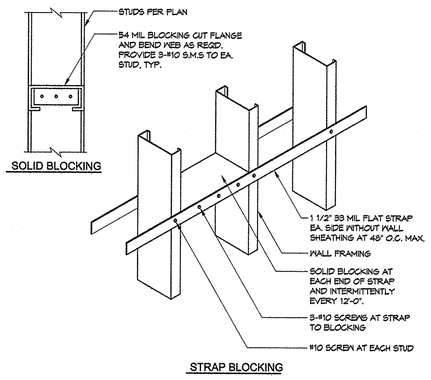

6 TYPICAL STUD BLOCKING

1 1/2"=1'-0"

NOTE:
1. FOR CONNECTIONS TO JAMB, SEE DET. 3/S901.

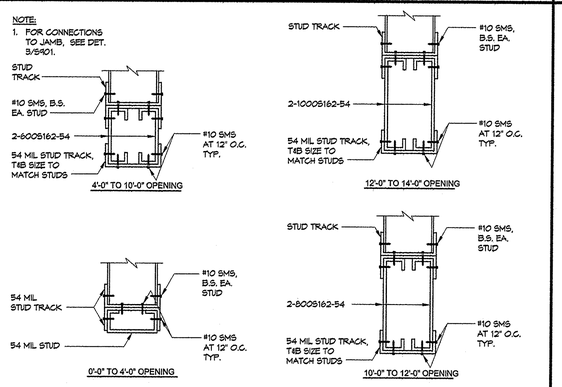

7 TYPICAL HEADER SCHEDULE

N.T.S.

NOTE:
1. FOR CONNECTIONS TO JAMB, SEE DET. 3/S901.

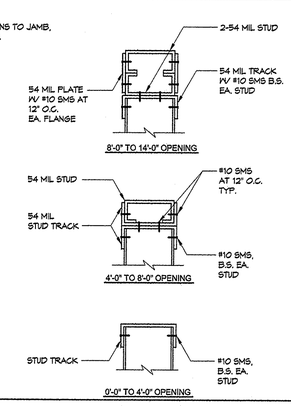

8 TYPICAL SILL SCHEDULE

N.T.S.

HOWARD RECONCILED SET
EUGENE SCHOOL DISTRICT 4J
700 PEARL AVE, EUGENE, OREGON 97404
HOWARD ELEMENTARY SCHOOL

LIGHT GAUGE FRAMING DETAILS

PROJECT #:	1330
ISSUE DATE:	10/28/2014
DRAWN:	AAH
CHECKED:	VMB
REVISIONS:	

S901

H-L #8547.1

© 2014 PIVOT ARCHITECTURE

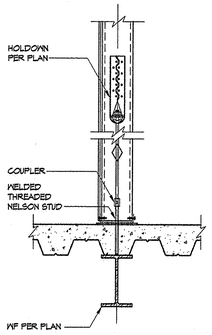

(A) AT SECOND FLOOR

13 TYPICAL HOLDOWN AT 2ND FLOOR

N.T.S.

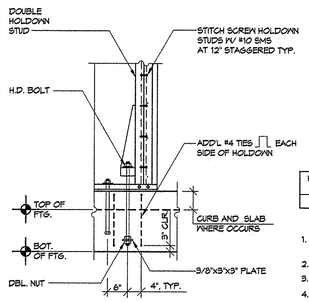

HOLDOWN	MIN. POST SIZE	MIN. A.B. DIA.	MIN. A.B. EMBED.
S/HD15S	2- 6005250-47	1" (5)	10"

1. FOLLOW ALL MANUFACTURER'S GUIDELINES NECESSARY TO ACHIEVE FULL ICC DESIGN VALUES.
2. WELD HOLDOWN STUD BACK TO BACK OR STITCH SCREW
3. HOLE THROUGH SILL PLATE AT A.B. SHALL BE A.B. DIA. + 1/4"
4. HOLDOWN SHALL BE INSTALLED TIGHT TO THE HOLDOWN POST WITHOUT FILLERS OR DAPPING. DO NOT BEND HOLDOWN ANCHORS.
5. PROVIDE GR 55 AT 1" DIA. ANCHOR RODS.
6. SEE DETAIL 13/S902 FOR HOLDOWN AT SECOND FLOOR

(A) AT FOUNDATION

9 TYPICAL HOLDOWN AT FOUNDATION

N.T.S.

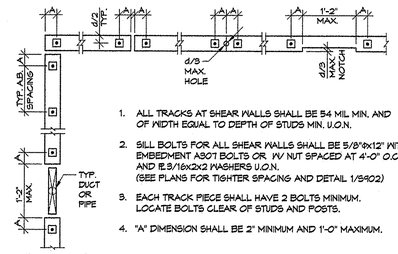

1. ALL TRACKS AT SHEAR WALLS SHALL BE 54 MIL MIN. AND OF WIDTH EQUAL TO DEPTH OF STUDS MIN. U.O.N.
2. SILL BOLTS FOR ALL SHEAR WALLS SHALL BE 5/8"ø x 12" WITH 'T' EMBEDMENT A307 BOLTS OR W/ NUT SPACED AT 4'-0" O.C. MAX. AND IE 3/16x2x2 WASHERS U.O.N. (SEE PLANS FOR TIGHTER SPACING AND DETAIL 1/S902)
3. EACH TRACK PIECE SHALL HAVE 2 BOLTS MINIMUM. LOCATE BOLTS CLEAR OF STUDS AND POSTS.
4. "A" DIMENSION SHALL BE 2" MINIMUM AND 1'-0" MAXIMUM.

5 ANCHOR BOLT AND TRACK REQUIREMENTS

N.T.S.

SHEAR WALL SYMBOL, MARK	STUD AND TRACK THICKNESS (MILS)	CONC. BOLTS AT 2ND FLOOR	ANCHOR BOLT AT FOUNDATION
6	54	5/8"ø AT 2'-0" O.C.	5/8"ø AT 2'-0" O.C.
4	54	5/8"ø AT 1'-6" O.C.	5/8"ø AT 1'-6" O.C.
3	54	5/8"ø AT 1'-4" O.C.	5/8"ø AT 1'-4" O.C.
2	54	5/8"ø AT 1'-0" O.C.	5/8"ø AT 1'-0" O.C.
4 4	54	N.A.	5/8"ø AT 8" O.C.
3 3	54	N.A.	5/8"ø AT 8" O.C.
2 2	54	N.A.	5/8"ø AT 6" O.C.

NOTES:

1. USE #8 BUGLE HEAD SCREW x1.25 INCHES LONG AT PLYWOOD SHEATHING.
2. (#) NUMBER SHOWN IN SYMBOL REPRESENTS PANEL EDGE SCREW (E.S.) IN INCHES.
3. (#)(#) DENOTES SHEATHING ON BOTH FACES OF WALL
4. FOR ADDITIONAL SHEAR WALL FRAMING INFORMATION., SEE DET. 2/S902
5. USE 5/8" PLYWOOD, STRUCT 1 (FIRE-TREATED)
6. SEE 3/S902 OR 4/S902 FOR TOP TRACK ATTACHMENT TO W SECTION
7. SEE 7/S902 FOR STUD ATTACHMENT TO HSS

1 SHEAR WALL SCHEDULE

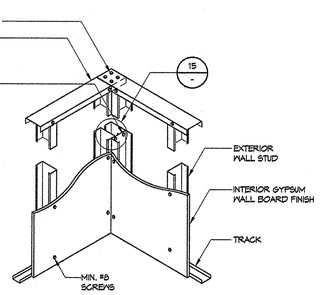

14 TYPICAL CORNER FRAMING

N.T.S.

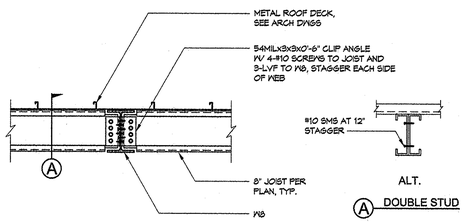

(A) DOUBLE STUD

10 ROOF JOIST TO W8 CONN.

1"=1'-0"

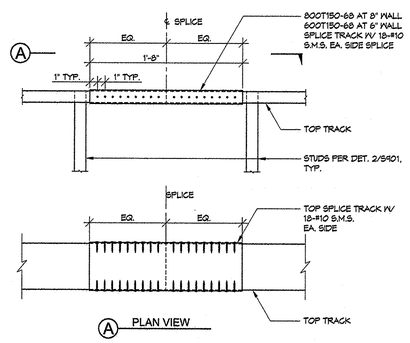

(A) PLAN VIEW

6 TYPICAL TOP TRACK SPLICE DETAIL

1 1/2"=1'-0"

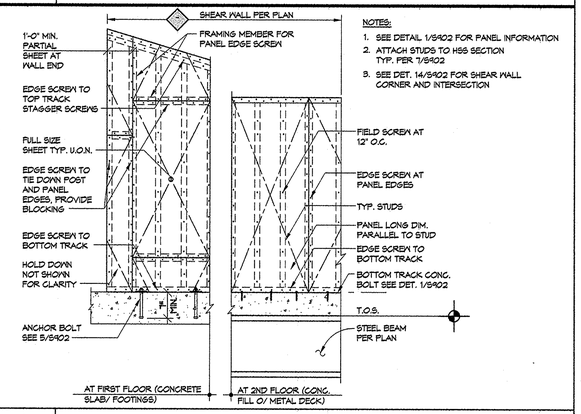

NOTES:

1. SEE DETAIL 1/S902 FOR PANEL INFORMATION
2. ATTACH STUDS TO HSS SECTION TYP. PER 7/S902
3. SEE DET. 14/S902 FOR SHEAR WALL CORNER AND INTERSECTION

2 TYPICAL SHEAR WALL ELEVATION

N.T.S.

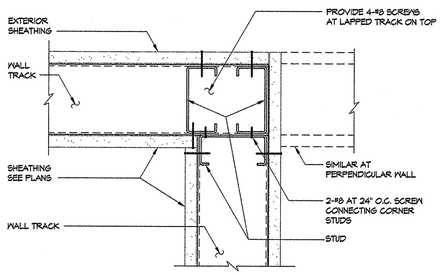

15 TYPICAL CORNER FRAMING

N.T.S.

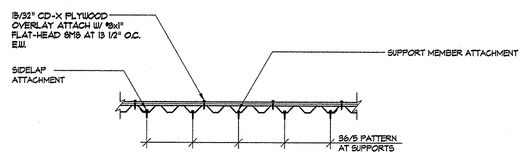

NOTE:

1. UNLESS OTHERWISE NOTED, ATTACHMENT SHALL BE:

	DECK TYPE AND GAGE	SCREW ATTACHMENT: AT SUPPORT MEMBERS	AT PARALLEL MEMBERS	AT SIDELAPS
FLOOR	1 9/16" VERCOR DECK-22GA	#12-14x3/4 TEKS 3 AT ALT. FLUTES	#12-14x3/4 TEKS 3 AT 1'-0"O.C.	#12-14x3/4 TEKS 1 AT 24"O.C.

11 PLATFORM FLOOR FRAMING

1"=1'-0"

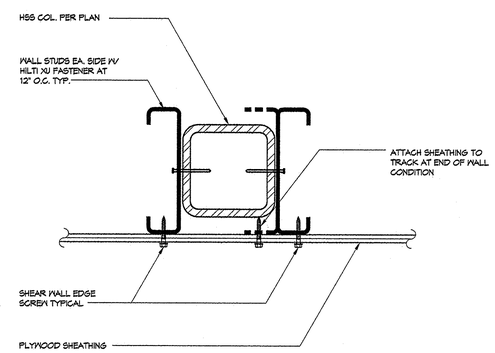

7 STUD ATTACHEMENT AT HSS COL.

3"=1'-0"

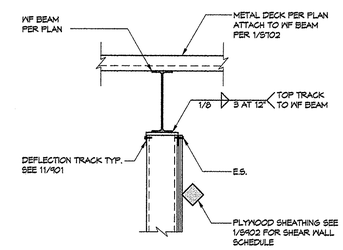

AT WF BEAM

3 TYPICAL INTERIOR SHEAR WALL TOP TRACK CONNECTION

1"=1'-0"

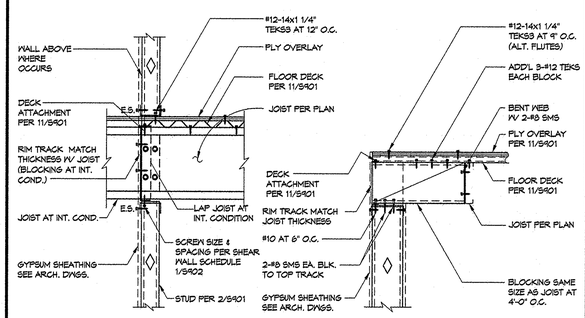

(A) JOIST PERP. TO WALL (B) JOIST PARALLEL TO WALL

12 PLATFORM FLOOR FRAMING DETAILS JOIST PARALLEL/ PERP. TO WALL

1"=1'-0"

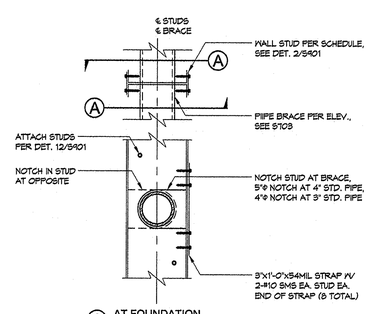

(A) AT FOUNDATION

8 STUD INSTALLATION AT BF BRACES

1 1/2"=1'-0"

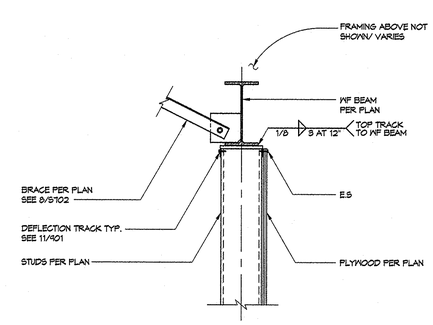

4 SHEARWALL TOP TRACK CONNECTION AT EXTERIOR WALL

1"=1'-0"

PIVOT ARCHITECTURE

REGISTERED PROFESSIONAL ENGINEER 65387PE OREGON JAN 23, 2007 VIKKI H. BOURNIGUE Expires: 12-31-15

IBI GROUP

Iowa

HOHBACH-LEWIN, INC. STRUCTURAL ENGINEERS 157 East 7th Avenue, Suite 302 Eugene, OR 97401 (541) 344-1701, Fax (541) 349-1702

HOWARD RECONCILED SET
EUGENE SCHOOL DISTRICT 4J
700 HOWARD AVE, EUGENE, OREGON 97404
HOWARD ELEMENTARY SCHOOL

LIGHT GAUGE FRAMING DETAILS

PROJECT #:	5305
ISSUE DATE:	10/28/2014
DRAWN:	AMA
CHECKED:	VHB

REVISIONS:

S902

H-L #9547.1

© 2014 PIVOT ARCHITECTURE

NOTE:
1. COORDINATE FINAL TOP OF PARTITION BEAM W/ SELECTED OPERABLE PARTITION MFR'S ASSEMBLY PRIOR TO FABRICATION
2. OWJ TO BE DESIGNED FOR THE FOLLOWING ADD'L VERTICAL UNIFORM LOAD APPLIED TO THE OWJ BOTTOM CHORD:
   w_{DL} = 225 plf
   w_{SD} = 100 plf

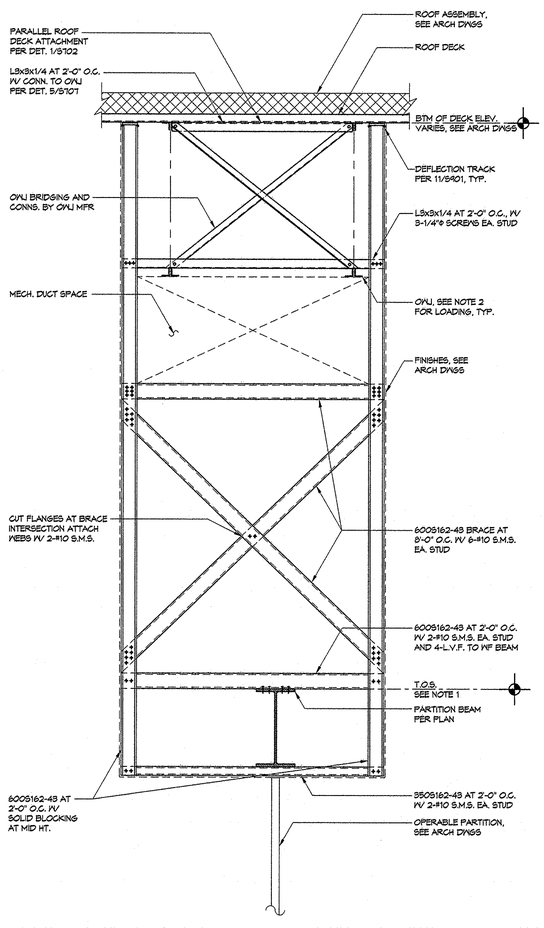

16 PARTITION BEAM SOFFIT FRAMING - GYM/ CAFETERIA

1/2"=1'-0"

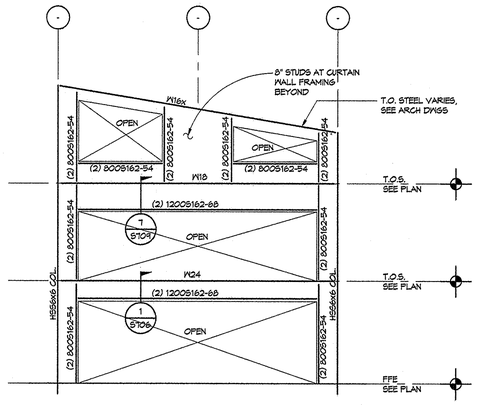

9 CLASSROOM ELEVATION - COURTYARD SIDE

1/8"=1'-0"

NOTE:
1. COORDINATE FINAL TOP OF PARTITION BEAM W/ SELECTED OPERABLE PARTITION MFR'S ASSEMBLY PRIOR TO FABRICATION.
2. ALONG THE LENGTH OF THE PARTITION BEAM, OWJ TO BE DESIGNED FOR THE FOLLLOWING ADD'L VERTICAL UNIFORM LOAD APPLIED TO THE OWJ BOTTOM CHORD:
   w_{DL} = 225 plf
   w_{SD} = 100 plf

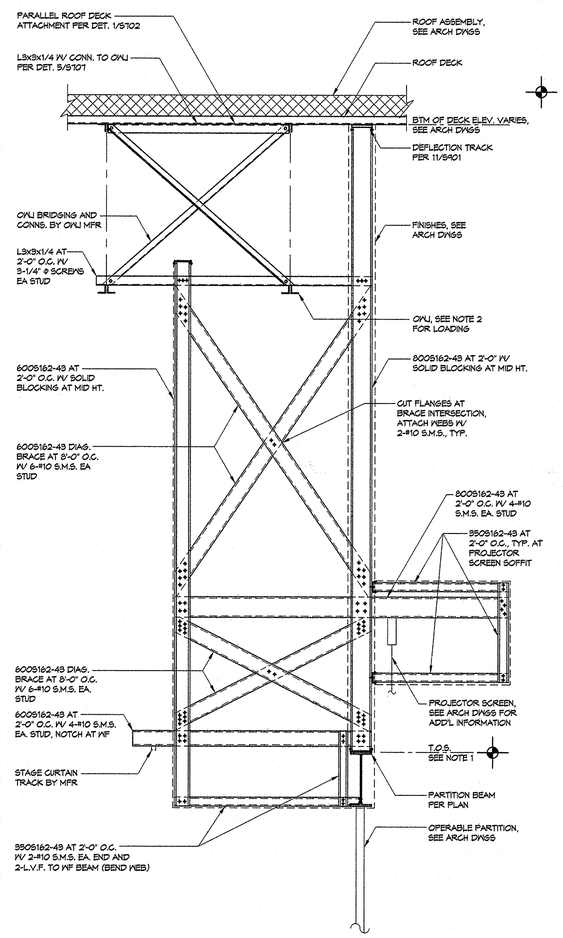

12 PARTITION BEAM SOFFIT FRAMING - PROSCENIUM

1/2"=1'-0"

NOTES:
1. SEE DETAILS ON SHEET S401 FOR TYPICAL WALL STUD AND HEADER SCHEDULES, FRAMING AT OPENING AND CONNECTION DETAILS NOT NOTED HERE.
2. SEE 8/S402 FOR ADDITIONAL REQUIREMENTS FOR INSTALLATION OF STUDS IN BRACED FRAME BAYS.

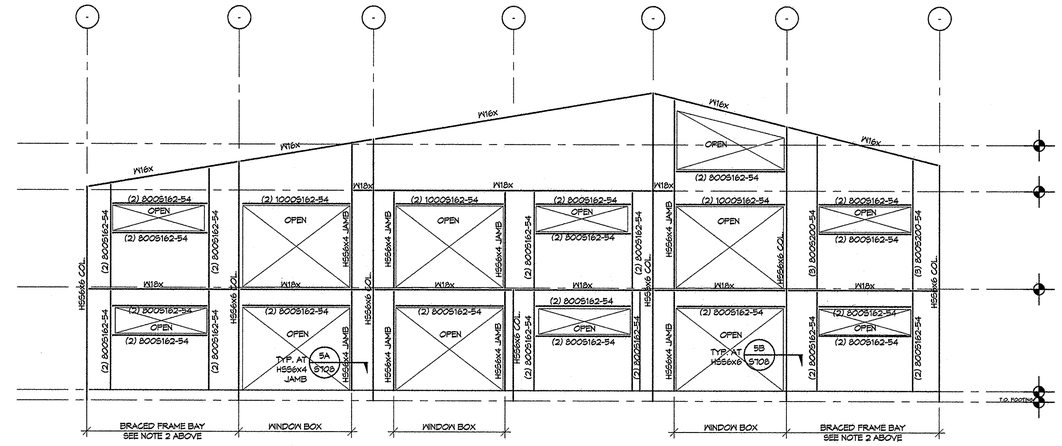

4 CLASSROOM ELEVATION

1/8"=1'-0"

NOTES:
1. SEE DETAILS ON SHEET S401 FOR TYPICAL WALL STUD AND HEADER SCHEDULES, FRAMING AT OPENING AND CONNECTION DETAILS NOT NOTED HERE.
2. SEE 8/S402 FOR ADDITIONAL REQUIREMENTS FOR INSTALLATION OF STUDS IN BRACED FRAME BAYS.

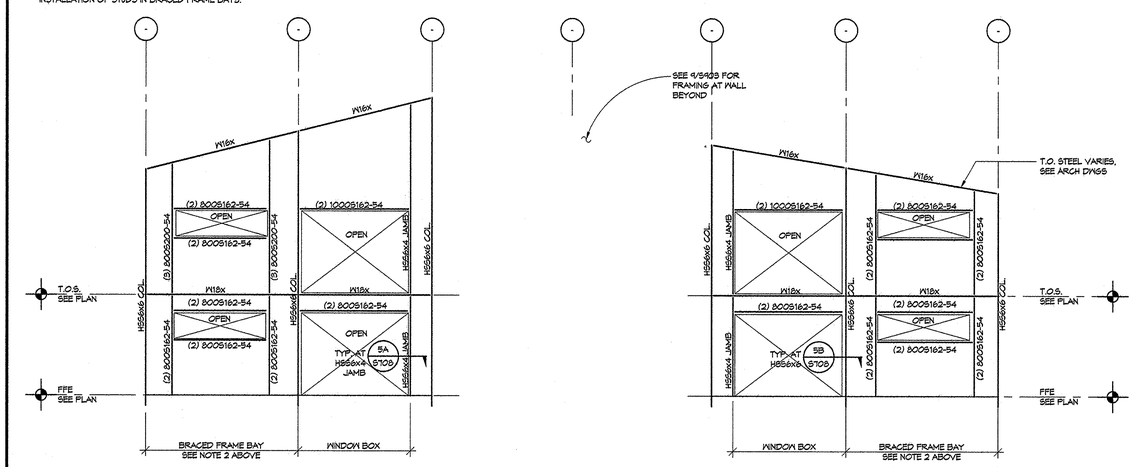

6 CLASSROOM ELEVATION - COURTYARD SIDE

1/8"=1'-0"

NOTES:
1. SEE DETAILS ON SHEET S401 FOR TYPICAL WALL STUD AND HEADER SCHEDULES, FRAMING AT OPENING AND CONNECTION DETAILS NOT NOTED HERE.

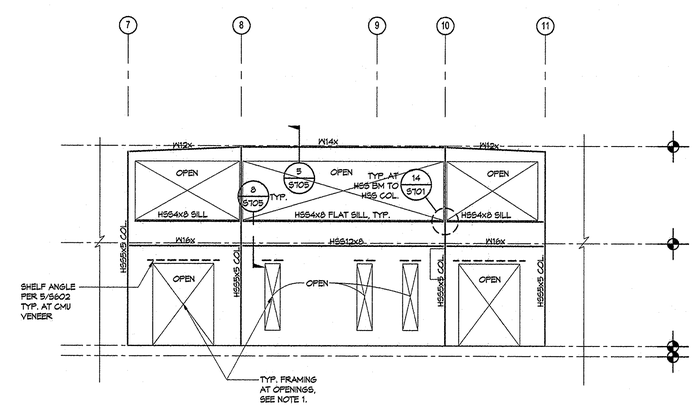

8 SOUTH WALL OF MEDIA CENTER

1/8"=1'-0"

PIVOT ARCHITECTURE

REGISTERED PROFESSIONAL ENGINEER — STRUCTURAL — OREGON — JAN 23, 2015 — VIKRI H. BOURNIGAL — Expires: 12-31-15

IBI GROUP

Iowa

HOHBACH-LEWIN, INC. STRUCTURAL ENGINEERS
258 East 8th Ave. Eugene, OR 97401 (541) 345-1701, Fax (541) 345-1702
Suite 302

HOWARD RECONCILED SET
EUGENE SCHOOL DISTRICT
700 HOWARD AVE. EUGENE, OREGON 97404
HOWARD ELEMENTARY SCHOOL

EXTERIOR WALL ELEVATIONS

PROJECT #:	1330
ISSUE DATE:	10/28/2014
DRAWN:	AMA
CHECKED:	VHB
REVISIONS:	

S903

H-L #9547.1

© 2014 PIVOT ARCHITECTURE

STANDARD MECHANICAL ABBREVIATIONS

AF	AIRFOIL	IE	INVERT ELEVATION
AFF	ABOVE FINISHED FLOOR	IN	INCH(ES)
AHP	APPARATUS HOUSING PLENUM	INSUL	INSULATION
ALT	ALTERNATIVE	ISOL	ISOLAT(OR)(ION)
AL	ALUMINUM	KW	KILOWATT
APD	AIR PRESSURE DROP	KWH	KILOWATT HOUR
APPROX	APPROXIMATELY	L	LENGTH
ARCH	ARCHITECT(URAL)	LAT	LEAVING AIR TEMP
AUTO	AUTOMATIC	LB	POUND
BDD	BACKDRAFT DAMPER	LDB	LEAVING DRY BULB
BI	BACKWARD INCLINED	LF	LINEAR FEET
BLDG	BUILDING	LFT	LEAVING FLUID TEMPERATURE
BSMT	BASEMENT	LVG	LEAVING
BTU	BRITISH THERMAL UNIT	LWB	LEAVING WET BULB
BTUH	BRITISH THERMAL UNITS PER HOUR	LWT	LEAVING WATER TEMPERATURE
CFH	CUBIC FEET PER HOUR	MAX	MAXIMUM
CFM	CUBIC FEET PER MINUTE	MBH	THOUSAND BTU PER HOUR
CFS	CUBIC FEET PER SECOND	MECH	MECHANICAL
CLG	CEILING OR COOLING	MFR	MANUFACTURER
CONC	CONCRETE	MIN	MINIMUM
CONN	CONNECT(ION)	MISC	MISCELLANEOUS
CONT	CONTINUE(ED)(UATION)	MTD	MOUNTED
CL	CENTERLINE	NC	NORMALLY CLOSED
DDC	DIRECT DIGITAL CONTROL	NIC	NOT IN CONTRACT
DEFL	DEFLECTION	NO	NORMALLY OPEN
DN	DOWN	OAD	OUTSIDE AIR DAMPER
DP	DEW POINT	OC	ON CENTER DISTANCE
DWDI	DOUBLE WIDTH DOUBLE INLET	OSA	OUTSIDE AIR
DWG	DRAWING	PH	PHASE
EA	EXHAUST AIR	PP	POLYPROPYLENE
EAD	EXHAUST AIR DAMPER	PSI	POUNDS PER SQUARE INCH
EAT	ENTERING AIR TEMPERATURE	PVC	POLYVINYL CHLORIDE
EDB	ENTERING DRY BULB	PVS	PVC COATED STEEL
EFF	EFFICIENCY	R (RAD)	RADIUS
EFT	ENTERING FLUID TEMPERATURE	RA	RETURN AIR
ELEC	ELECTRIC(AL)	RAD	RETURN AIR DAMPER
ELEV	ELEVATION	REV	REVISION
ENGR	ENGINEER	RH	RELATIVE HUMIDITY
EQ	EQUAL	RPM	REVOLUTIONS PER MINUTE
EQUIP	EQUIPMENT	SA	SUPPLY AIR
ESP	EXTERNAL STATIC PRESSURE	SCFM	STANDARD CUBIC FEET PER MINUTE
EWB	ENTERING WET BULB	SD	SMOKE DAMPER
EWT	ENTERING WATER TEMPERATURE	SECT	SECTION
EX	EXTRACTOR	SENS	SENSIBLE
EXH	EXHAUST	SIM	SIMILAR
EXIST	EXISTING	SP	STATIC PRESSURE
EXP	EXPANSION	SPEC	SPECIFICATION
F	DEGREES FAHRENHEIT	SQ	SQUARE
FC	FORWARD CURVED	SF	SQUARE FOOT(FEET)
FIG	FIGURE	SQ IN	SQUARE INCH(ES)
FILT	FILTER	SS	STAINLESS STEEL
FLEX	FLEXIBLE	STL	STEEL
FPD	FLUID PRESSURE DROP	STRUCT	STRUCTUR(E)(AL)
FPM	FEET PER MINUTE	SWP	SINGLE WALL PLENUM
FPS	FEET PER SECOND	SWSI	SINGLE WIDTH SINGLE INLET
FT	FEET/FOOT	TEMP	TEMPERATURE
FTR	FINNED TUBE RADIATOR	TSP	TOTAL STATIC PRESSURE
FU	FIXTURE UNIT	TYP	TYPICAL
FUT	FUTURE	V	VOLTS
FV	FACE VELOCITY	VD	VOLUME DAMPER
GA	GAGE/GAUGE	VEL	VELOCITY
GAL	GALLON	VERT	VERTICAL
GALV	GALVANIZED	VFD	VARIABLE FREQUENCY DRIVE
GLY	GLYCOL	VTR	VENT THROUGH ROOF
GPH	GALLONS PER HOUR	W	WIDTH
GPM	GALLONS PER MINUTE	WG	WATER GAUGE
H	HEIGHT	WPD	WATER PRESSURE DROP
HORIZ	HORIZONTAL	WTD	WATER TEMPERATURE DROP
HP	HORSEPOWER	WTR	WATER TEMPERATURE RISE
HTG	HEATING	W/	WITH
ID	INSIDE(DIAMETER/DIMENSION)	W/O	WITHOUT

DUCT DETAILS (LOW VELOCITY)

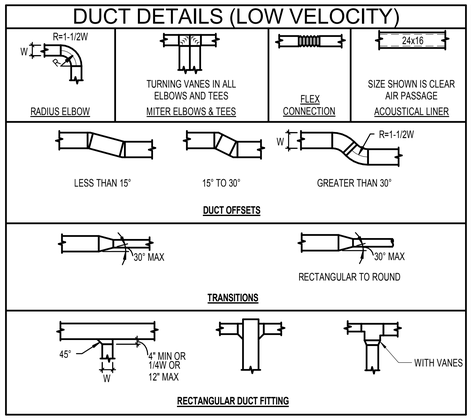

HVAC PIPING

D	D	DRAIN (CONDENSATE/INDIRECT)
PC	PC	PUMPED CONDENSATE
CHWS	CHWS	CHILLED WATER SUPPLY
CHWR	CHWR	CHILLED WATER RETURN
HWS	HWS	HEATING WATER SUPPLY
HWR	HWR	HEATING WATER RETURN
RS	RS	REFRIGERANT SUCTION
RL	RL	REFRIGERANT LIQUID
RHG	RHG	REFRIGERANT HOT GAS
RRV	RRV	REFRIGERANT RELIEF VENT
DTS	DTS	DUAL TEMPERATURE SUPPLY
DTR	DTR	DUAL TEMPERATURE RETURN

CONTROL SYMBOLS

	DAMPER WITH OPERATOR
	2-WAY CONTROL VALVE
	3-WAY CONTROL VALVE
CO2	CARBON DIOXIDE SENSOR
SMK	DUCT SMOKE DETECTOR
T	ELECTRONIC TEMPERATURE SENSOR

DUCT LEGEND

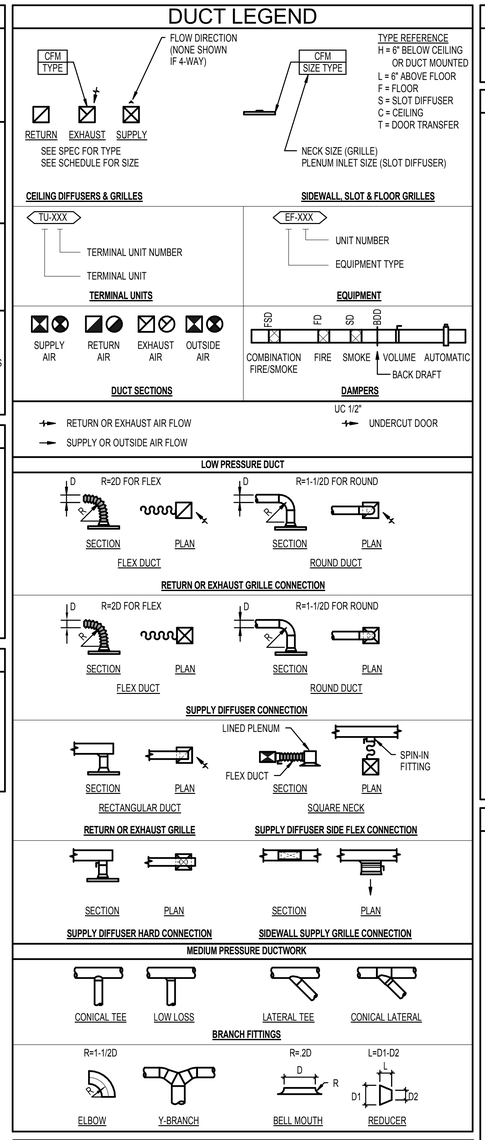

SYMBOLS

A	ACCESS PANEL	K	CAP EXISTING / CAP FOR FUTURE
B	BELOW GRADE / FLOOR	R	RELOCATE EXISTING
C	CONNECT TO EXISTING	X	REMOVE EXISTING
E	EXISTING TO REMAIN	1	NOTE

CALL OUT SYMBOLS

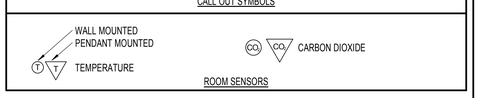

GENERAL NOTE

THIS IS A STANDARD LEGEND SHEET, THEREFORE, SOME SYMBOLS MAY APPEAR ON THIS SHEET THAT DO NOT APPEAR ON THE DRAWINGS.

MISC. VALVES & COCKS

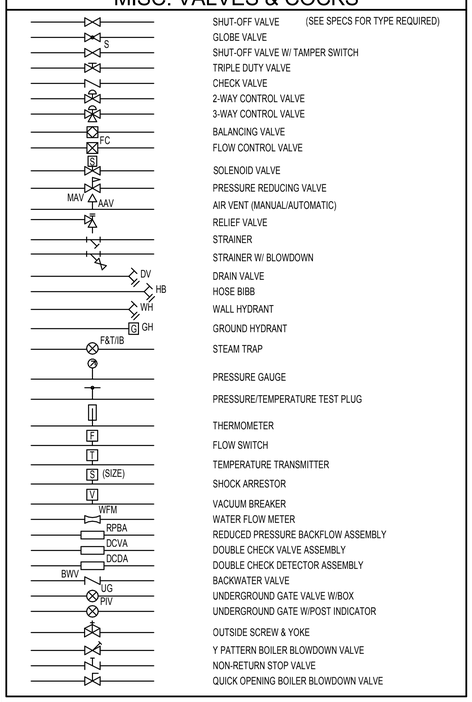

MISC. FITTINGS & SYMBOLS

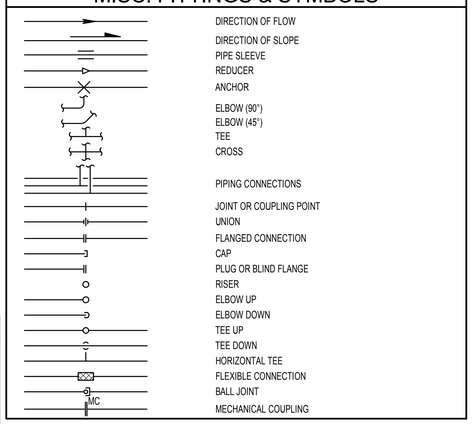

NEW AND EXISTING WORK

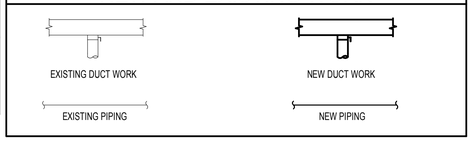

PIVOT ARCHITECTURE

REGISTERED PROFESSIONAL ENGINEER 18329PE OREGON NICHOLAS P. COLLINS JR. 10-23-2014 EXPIRES: 12-31-15

PAE
Portland | San Francisco | Seattle
pae-engineers.com

HOWARD RECONCILED SET
4J EUGENE SCHOOL DISTRICT
700 HOWARD AVE, EUGENE, OREGON 97404
HOWARD ELEMENTARY SCHOOL

SYMBOLS, LEGENDS AND ABBREVIATIONS - MECHANICAL

PROJECT #	1336
ISSUE DATE:	10/28/2014
DRAWN:	SMH
CHECKED:	NPC
REVISIONS:	

M001

PRINTED ON: 10/23/2014 3:29:15 PM FROM FILE: C:\Revit Local Files\13-1532_HES MEP14\13-1532_HES MEP14_stacy.hansen.rvt

© 2014 PIVOT ARCHITECTURE

AIR COOLED CHILLER SCHEDULE

TAG NUMBER	LOCATION	SERVICE	DESIGN CAPACITY (TONS)	EVAPORATOR EWT (°F)	EVAPORATOR LWT (°F)	EVAPORATOR FLUID	EVAPORATOR DESIGN FLOW RATE (GPM)	EVAPORATOR MAX WPD (FT. WG.)	EVAPORATOR MINIMUM FLOW RATE (GPM)	ELECTRICAL COMPRESSORS COUNT	ELECTRICAL COMPRESSORS RLA	ELECTRICAL COMPRESSORS VFD	ELECTRICAL FANS COUNT	ELECTRICAL FANS FLA PER FAN	ELECTRICAL FANS VFD	ELECTRICAL SINGLE POINT CONNECTION MCA	ELECTRICAL SINGLE POINT CONNECTION VOLT/ PHASE	DESIGN EFFICIENCY FULL LOAD (EER)	DESIGN EFFICIENCY NPLV (EER)	DESIGN EFFICIENCY FULL LOAD (COP)	DESIGN EFFICIENCY IPLV/ NPLV (COP)	CODE AHRI EFFICIENCY FULL LOAD (EER)	CODE AHRI EFFICIENCY NPLV (EER)	CODE AHRI EFFICIENCY FULL LOAD (COP)	CODE AHRI EFFICIENCY IPLV/ NPLV (COP)	REFRIGERANT TYPE	REFRIGERANT QUANTITY (LBS)	APPROX. WEIGHT (LBS)	MANUFACTURER & MODEL	NOTES
ACC-1	SERVICE COURT	CHILLED WATER	130	60	44	WATER	200.0	7	194.3	6	267	N	8	3.6	N	307	460/3	9.6	15.2	2.81	15.2	9.56	-	-	12.50	R-410A	230	7,320	DAIKIN APPLIED AGZ130D	1

GENERAL NOTES:
A. DESIGN EFFICIENCIES ARE AT DESIGN CONDITIONS LISTED IN THE SCHEDULE.
B. AHRI EFFICIENCIES ARE AT ARI STANDARD CONDITIONS.
C. CODE AHRI EFFICIENCY REQUIREMENTS PROVIDED FOR REFERENCE.
D. PROVIDE SCCR SUFFICIENT TO MEET THE AVAILABLE FAULT CURRENT AT THE PANELBOARD OR SWITCHBOARD FROM WHICH THE UNIT IS FED. COORDINATE WITH ELECTRICAL DRAWINGS AND ELECTRICAL CONTRACTOR.

NOTES:
1. CHILLER IS A DESIGN ALTERNATE.

ROOF VENTILATOR SCHEDULE

TAG NUMBER	LOCATION	SERVICE	TYPE	AIRFLOW CFM	AIRFLOW TSP (IN. WG)	THROAT SIZE (IN)	APPROX. WEIGHT (LBS)	MANUFACTURER & MODEL	NOTES
RV-301	ROOF	MEDIA CENTER	RELIEF	11000	0.05	42X84	270	GREENHECK FGR	

GENERAL NOTES:
A. PROVIDE LOW LEAKAGE MOTORIZED DAMPER.

NOTES:
1. NONE

BOILER SCHEDULE

TAG NUMBER	LOCATION	SERVICE	TYPE	FUEL TYPE	FUEL INPUT CAPACITY (MBH)	FUEL OUTPUT CAPACITY (MBH)	FLUID SUPPLY TEMP (°F)	FLUID RETURN TEMP (°F)	FLUID DESIGN FLOW (GPM)	FLUID MIN FLOW (GPM)	FLUID MAX WPD (FT. WG)	ELECTRICAL FLA	ELECTRICAL VOLT/ PHASE	MINIMUM EFFICIENCY (AFUE)	APPROX. WEIGHT (LBS)	MANUFACTURER & MODEL	NOTES
B-1	BOILER A119	BUILDING HEAT	CONDENSING	NAT. GAS	2,000	1,840	130	110	184	46	4.0	7	120/1	92%	3,054	LOCHINVAR CREST	
B-2	BOILER A119	BUILDING HEAT	CONDENSING	NAT. GAS/PROPANE	2,000	1,840	130	110	184	46	4.0	7	120/1	92%	3,054	LOCHINVAR CREST	

GENERAL NOTES:
A. UNITS MOUNTED ON HOUSEKEEPING PAD.
B. MINIMUM EFFICIENCY IS AT 100% FIRE, 100 DEG F RETURN WATER TEMPERATURE AND 140 DEG F SUPPLY WATER TEMPERATURE.
C. PROVIDE 48 INCHES CLEAR BETWEEN MULTIPLE BOILERS.
D. PROVIDE A MINIMUM SIDE CLEARANCE OF 36 INCHES FOR EACH BOILER.
E. PROVIDE 36 INCHES TOP CLEARANCE ABOVE BOILER.

NOTES:
1.

CONDENSING UNIT SCHEDULE

TAG NUMBER	LOCATION	SERVICE	CAPACITY (MBH)	TYPE	VOLT/ PHASE	AMBIENT TEMP (F)	MCA	COMP FLA	MANUFACTURER & MODEL	NOTES
ACCU-C-IDF	MECH C300	FCU-C-IDF	24	DX	208/1	95	13.6	0.70	CARRIER 24AP-024	1
ACCU-MDF	MECH B300	FCU-MDF	36	DX	208/1	95	22.1	1.20	CARRIER 24AP-036	1
ACCU-B-IDF	MECH B300	FCU-B-IDF	24	DX	208/1	95	13.6	0.70	CARRIER 24AP-024	1
ACCU-ELEC	MECH A200	FCU-ELEC	24	DX	208/1	95	13.6	0.70	CARRIER 24AP-024	1

NOTES:
1. OUTDOOR UNITS INTALLED IN MECHANICAL EQUIPMENT PLATFORMS.

DUCT MOUNTED COIL SCHEDULE

TAG NUMBER	LOCATION	SERVICE	SIZE (IN)	CFM	MAX APD IN WC	MAX FPM	HYDRONIC COIL COOLING MBH	HYDRONIC COIL COOLING GPM	HYDRONIC COIL HEATING MBH	HYDRONIC COIL HEATING GPM	COIL RUNOUT PIPING (INCH)	NOTES
DC-B103	ADMIN	B103	20X18	790	0.35	350	24.6	3.1	51.4	3.1	3/4	2
DC-B102	ADMIN	B102	10X14	270	0.37	300	8.3	1.1	19.1	1.1	3/4	2
DC-B101	ADMIN	SECRETARY	6.25X14	175	0.29	300	5.4	0.7	11.6	0.7	3/4	2
DC-B100	ADMIN	RECEPTION	15X22	885	0.36	400	27.1	3.5	56.1	3.5	3/4	2
DC-B110	ADMIN	CONFERENCE	6.25X14	170	0.28	300	5.3	0.7	11.3	0.7	3/4	2
DC-A101	MECH 201	LOBBY	15X28	1040	0.37	400	32	4.1	66.8	4.1	1	2
DC-B113	ADMIN	MOTOR SKILLS, WORKROOM	13.5X24	800	0.39	400	24.8	3.1	51.4	3.1	3/4	2
DC-B116	ADMIN	SMALL GROUP 1ST FLOOR	6.25X14	180	0.30	300	5.6	0.7	11.8	0.7	3/4	2
DC-B216	ADMIN	SMALL GROUP 2ND FLOOR	10X16	380	0.39	350	11.7	1.5	21.5	1.5	3/4	2

GENERAL NOTES:
A. HYDRONIC COIL TO BE MOUNTED EXTERNALLY IN THE DUCTWORK DOWNSTREAM OF THE TERMINAL UNIT.

NOTES:
1. 3-WAY CONTROL VALVE ON COIL.
2. DUCT-MOUNTED COIL DOWNSTREAM OF TERMINAL UNIT.

CEILING SUPPLY DIFFUSERS (C-1)

CFM RANGE	SQUARE NECK SIZE (BASED ON: TITUS MCD)	FACE SIZE T-BAR	FACE SIZE SURFACE
0-200	6x6	24x24	8x8
201-320	8x8	24x24	10x10
321-440	10x10	24x24	12x12
440-550	12x12	24x24	14x14
551-680	14x14	24x24	16x16
681-800	16x16	24x24	18x18
801-1100	18x18	24x24	20x20

RETURN/EXHAUST GRILLES (C-2)

CFM RANGE	SQUARE NECK SIZE (BASED ON: TITUS 50F)	FACE SIZE T-BAR	FACE SIZE SURFACE
0-340	10x10	24x24	12x12
341-520	12x12	24x24	14x14
521-700	14x14	24x24	16x16
701-950	16x16	24x24	18X18
951-1200	18x18	24x24	20X20
1201-1800	22x22	24x24	24x24
1801-4000	22X46	24X48	24X48

GENERAL NOTES:
A. UNTHROWED CEILING RETURN GRILLES DEFAULT TO C-2 WITH NO DUCT CONNECTION, FULL FACE SIZE, FOR TRANSFER TO CEILING PLENUM.

FAN COIL UNIT SCHEDULE

TAG NUMBER	LOCATION	SERVICE	TYPE	DX COOLING MBH	FAN CFM	FAN ESP (IN. WG)	FAN FLA	FAN VOLT/ PHASE	MANUFACTURER & MODEL	NOTES
FCU-C-IDF	IDF C101	IDF C101	DX	18	800	0.30	4.3	208/1	CARRIER FV4C-002	1
FCU-MDF	MDF B120	MDF B120	DX	36	1400	0.30	4.3	208/1	CARRIER FV4C-005	1
FCU-B-IDF	IDF B238	IDF B238	DX	18	800	0.30	4.3	208/1	CARRIER FV4C-002	1
FCU-ELEC	ELEC A118	ELEC A118	DX	24	1000	0.30	4.3	208/1	CARRIER FV4C-003	1

NOTES:
1. INSTALL WITH MIXING BOX FOR ECONOMIZER OPERATION.

TERMINAL UNIT SCHEDULE

TAG NUMBER	LOCATION	SERVICE	TYPE	PRIMARY AIR INLET (IN)	PRIMARY AIR MAX CFM	PRIMARY AIR HEATING CFM	PRIMARY AIR MIN CFM	PRIMARY AIR LOW MIN CFM	MANUFACTURER & MODEL	NOTES
TU-B103	ADMIN	STAFF ROOM	VV	10	790	350	230	230	TITUS DESV	4
TU-B102	ADMIN	PRINCIPAL	VV	6	270	130	70	70	TITUS DESV	4
TU-B101	ADMIN	SECRETARY	VV	6	175	85	70	70	TITUS DESV	4
TU-B100	ADMIN	RECEPTION	VV	8	885	310	230	230	TITUS DESV	4
TU-B110	ADMIN	CONFERENCE	VV	6	170	80	80	70	TITUS DESV	1,4
TU-A101	MECH RM A201	LOBBY	VV	10	1040	490	230	230	TITUS DESV	4
TU-B113	ADMIN	MOTOR SKILLS, WORKROOM	VV	6	800	285	230	230	TITUS DESV	4
TU-B116	ADMIN	SMALL GROUP 1ST FLOOR	VV	6	180	90	70	70	TITUS DESV	1,4
TU-B216	ADMIN	SMALL GROUP 2ND FLOOR	VV	10	380	230	230	230	TITUS DESV	1,4
TU-B232	MECH RM A201	HALLWAY - 2ND FLR	VV	10	690	345	140	140	TITUS DESV	

GENERAL NOTES:
A. AIR PRESSURE DROP THROUGH TERMINAL UNIT TO BE NO GREATER THAN 0.1 IN WG.
B. HYDRONIC COIL TO BE MOUNTED EXTERNALLY IN THE DUCTWORK DOWNSTREAM OF THE TERMINAL UNIT.

NOTES:
1. CO2 SENSOR LOCATED ADJACENT TO THERMOSTAT.
2. OCCUPANCY SENSOR LOCATED WITHIN SPACE.
3. 3-WAY CONTROL VALVE ON REHEAT COIL.
4. DUCT-MOUNTED COIL DOWNSTREAM OF TERMINAL UNIT.

KEY:
VV = VARIABLE AIR VOLUME TERMINAL UNIT

RADIANT SLAB MANIFOLD SCHEDULE

TAG NUMBER	SERVICE	FLOOR AREA (SF)	TUBE SPACING (IN. O.C.)	LOOP LENGTH (L.F.)	LOOP COUNT	TUBE DIA. (IN.)	FLUID	HEATING EWT (°F)	HEATING WTD (°F)	HEATING OUTPUT (BTUH/SF)	HEATING GPM	COOLING EWT (°F)	COOLING WTD (°F)	COOLING OUTPUT (BTUH/SF)	COOLING GPM	NOTES
RSM-1	CAFETERIA	1500	9	2000	7	5/8	WATER	110	10	25	7.5	55	5	12	7.5	

GENERAL NOTES:
A. HEATING: MAXIMUM ENTERING WATER TEMPERATURE = 110°F.
B. HEATING: MINIMUM WATER TEMPERATURE DIFFERENCE = 10°F.
C. COOLING: MINIMUM ENTERING WATER TEMPERATURE = 55°F.
D. COOLING: MINIMUM WATER TEMPERATURE DIFFERENCE = 5°F.
E. COOLING: MINIMUM SLAB SURFACE TEMPERATURE = 65 °F.
F. REFER TO DRAWINGS FOR SLAB TEMPERATURE SENSOR AND ROOM THERMOSTAT LOCATIONS.
G. REFER TO DRAWINGS FOR RADIANT ZONE LOCATIONS.

NOTES:
1. NONE.

SUPPLY AIR SLOT DIFFUSERS (S-1)

CFM RANGE	PLENUM INLET SIZE (BASED ON: TITUS TBDI-10)	# OF SLOTS	SLOT WIDTH (IN)	SLOT LENGTH (IN)	FACE SIZE
0-80	6 IN DIA OVAL	1	1	24	24x2
81-120	6 IN DIA OVAL	1	1	48	48x2
121-180	8 IN DIA OVAL	1	1	48	48x2
181-325	10 IN DIA OVAL	2	1	48	48x4

FAN SCHEDULE

TAG NUMBER	LOCATION	SERVICE	TYPE	AIRFLOW CFM	AIRFLOW TSP (IN WG)	AIRFLOW FAN RPM	MOTOR HP	MOTOR VOLT/ PHASE	VFD	APPROX. WEIGHT (LBS)	MANUFACTURER & MODEL	NOTES
EF-B300	MECH B300	B NORTH/ ADMIN	INLINE	2010	1.00	1725	1	460/3	NO	108	GREENHECK SQ-140-A	
EF-B301	MECH B301	B SOUTH RESTROOMS	INLINE	1900	0.75	1725	3/4	460/3	NO	108	GREENHECK SQ-130-A	
EF-C300	MECH C300	C RESTROOMS	INLINE	1900	0.75	1725	3/4	460/3	NO	109	GREENHECK SQ-130-A	
EF-A200	MECH A200	GYM RESTROOMS	INLINE	1060	0.75	1725	1/4	115/1	NO	58	GREENHECK SQ-100-A	
EF-GREASE	MECH A200	GREASE HOOD	SIDEWALL	1720	1.25	1725	1/2	115/1	NO	69	GREENHECK CW-121-A	
EF-DISH	MECH A200	DISHWASHER	SIDEWALL	600	1.00	1725	1/4	115/1	NO	53	GREENHECK CW-099A	
EF-ADMIN	MECH A201	ADMIN RELIEF	ROOF MOUNT	4690	0.75	1725	1-1/2	460/3	NO	153	GREENHECK LB-21	1
EF-CUST	CUST A104C	CUSTODIAL A104C	INLINE	160	0.25	1725	1/4	115/1	NO	9	GREENHECK BCF-106-4	
EF-TLT	ROOF	ADMIN TOILETS	ROOF MOUNT	305	0.50	1750	.25	115/1	NO	44	GREENHECK AE-12	
EF-C-IDF	C-IDF	C-IDF	CEILING	800	0.25	950	.38	115/1	NO	56	GREENHECK SP-A900	
EF-B-IDF	B-IDF	B-IDF	CEILING	800	0.25	950	.38	115/1	NO	56	GREENHECK SP-A900	
EF-MDF	MDF	MDF	CEILING	1400	0.25	1610	1.1	115/1	NO	56	GREENHECK SP-A1550	

GENERAL NOTES:
A. ALL FANS TO BE PROVIDED WITH LOW LEAKAGE MOTORIZED BACKDRAFT DAMPERS EXCEPT GREASE EXHAUST FAN, AND IDF AND MDF EXHAUST FANS.
B. FAN DAMPERS TO BE WIRED ACROSS FAN MOTOR.

NOTES:
1. VARIABLE SPEED EC MOTOR

PUMP SCHEDULE

TAG NUMBER	LOCATION	SERVICE	TYPE	FLUID TYPE	PERFORMANCE MAX FLOW (GPM)	PERFORMANCE MIN FLOW (GPM)	PERFORMANCE HEAD (FT. WC.)	PERFORMANCE SHUTOFF HEAD (FT. WC.)	PERFORMANCE PUMP EFFICIENCY %	MOTOR TYPE	MOTOR HP	MOTOR RPM	MOTOR VFD	MOTOR VOLT/ PHASE	APPROX. WEIGHT (LBS)	MANUFACTURER & MODEL	NOTES
HCP-1	BOILER A119	DUAL TEMPERATURE WATER	BASE MOUNT	WATER	180	54	94	108	70	ODP	7 1/2	1800	Y	460/3	375	B&G 1510	
HCP-2	BOILER A119	DUAL TEMPERATURE WATER	BASE MOUNT	WATER	180	54	94	108	70	ODP	7 1/2	1800	Y	460/3	375	B&G 1510	
RHP-INJ	MECH A200	RADIANT INJECTION	IN-LINE	WATER	8	3	6	-	-	PSC	1/40	3250	N	120/1	10	TACO 006B-VV	1
RHP-ZN	MECH A200	SLAB HEAT, COOL	IN-LINE	WATER	8	8	20	-	-	PSC	1/8	3250	N	120/1	12	TACO 0011	

GENERAL NOTES:
A.

NOTES:
1. VARIABLE VOLTAGE, VARIABLE SPEED INJECTION PUMP

DESIGN CONDITIONS - EUGENE, OR

SPACE	WINTER TEMPERATURE	WINTER HUMIDITY	SUMMER TEMPERATURE	SUMMER HUMIDITY
OUTDOOR	23.4˚ F DB	16.1˚ F DP / 12.6 HR / 26.9 ˚ F MCDB	91.7˚ F DB / 66.5˚ F MCWB	62.2˚ F DP / 84.8 HR / 74.6˚ F MCDB
INDOOR	70˚ F ± 2˚ F DB	50% RH MAX, NO MINIMUM	75˚ F ± 2˚ F DB	50% RH MAX, NO MINIMUM

GENERAL NOTES:
1. OUTDOOR CONDITIONS BASED ON ASHRAE FUNDAMENTALS 2013 99.6% AND 0.4% DATA.

PIVOT ARCHITECTURE

REGISTERED PROFESSIONAL ENGINEER 18329PE
NICHOLAS P. COLLINS JR.
10-23-2014
EXPIRES: 12-31-15

PAE
Portland | San Francisco | Seattle
pae-engineers.com

HOWARD RECONCILED SET
EUGENE SCHOOL DISTRICT 4J
700 HOWARD AVE, EUGENE, OREGON 97404
HOWARD ELEMENTARY SCHOOL

EQUIPMENT SCHEDULE - MECHANICAL

PROJECT #:	1336	REVISIONS:
ISSUE DATE:	10/28/2014	
DRAWN:	SMR	
CHECKED:	NPC	

M002

PRINTED ON: 10/23/2014 3:29:16 PM FROM FILE: C:\Revit Local Files\13-1532_HES MEP\413-1532_HES MEP14_stacy.hansen.rvt

AIR HANDLING UNIT

TAG NUMBER	LOCATION	SERVICE	MIXING BOX: MINIMUM OSA CFM	MIXING BOX: DESIGN OSA CFM	MIXING BOX: PRE-FILTER MERV RATING	SUPPLY FAN: AIRFLOW CFM	SUPPLY FAN: FAN TYPE	SUPPLY FAN: TSP (IN. WG.)	SUPPLY FAN: ESP (IN. WG.)	SUPPLY FAN: FAN RPM	SUPPLY FAN: MOTOR BHP	SUPPLY FAN: MOTOR HP	SUPPLY FAN: VOLT/ PHASE	SUPPLY FAN: VFD OR ECM	HYDRONIC COIL - HEATING MODE: EAT (°F)	HYDRONIC COIL - HEATING MODE: LAT (°F)	HYDRONIC COIL - HEATING MODE: GPM	HYDRONIC COIL - HEATING MODE: EWT (°F)	HYDRONIC COIL - COOLING MODE: EAT (°F DB/WB)	HYDRONIC COIL - COOLING MODE: LAT (°F DB/WB) (°F DB/WB)	HYDRONIC COIL - COOLING MODE: GPM	HYDRONIC COIL - COOLING MODE: EWT (°F)	HYDRONIC COIL - COOLING MODE: MIN WTD (°F)	DESIGN COIL FACE VELOCITY (FPM)	COIL RUNOUT PIPING (INCH)	APPROX. WEIGHT (LBS)	MANUFACTURER & MODEL	NOTES
AH-B130	MECH B300	COMMONS B130/HALL B124/B128	100	100	8	725	BC PLENUM	0.9	0.5	2,580	0.20	1.34	460/3	Y	70.5	124.4	3.5	130	79.8/63.5	54.0/53.1	3.5	44	14	350	1	405	AAON H3	
AH-B129	MECH B300	CLASSROOM B129	125	470	8	1,300	BC PLENUM	1.4	0.5	1,876	0.53	1.34	460/3	Y	58.0	120.9	6.0	130	83.1/64.5	54.13/52.87	6.0	44	14	370	1	544	AAON H3	
AH-B131	MECH B300	CLASSROOM B131	125	470	8	1,300	BC PLENUM	1.4	0.5	1,876	0.53	1.34	460/3	Y	58.0	120.9	6.0	130	83.1/64.5	54.13/52.87	6.0	44	14	370	1	544	AAON H3	
AH-B127	MECH B300	CLASSROOM B127	125	470	8	960	BC PLENUM	1.1	0.5	1,546	0.29	1.34	460/3	Y	50.8	116.5	4.8	130	84.9/65	54.82/53.55	4.8	44	13	440	1	405	AAON H3	
AH-B126	MECH B300	CLASSROOM B126	125	470	8	800	BC PLENUM	0.8	0.5	1,344	0.19	1.34	460/3	Y	45.8	117.3	3.7	130	86.2/65	54.42/53.26	3.7	44	14	370	1	405	AAON H3	
AH-B125	MECH B300	LIFE SKILLS B125	125	470	8	860	BC PLENUM	1.0	0.5	1,449	0.24	1.34	460/3	Y	47.6	117.0	4.0	130	85.8/63.5	54.6/53.39	4.0	44	14	390	1	405	AAON H3	
AH-ADMIN	MECH A201	ADMIN AREA	850	850	8	4,690	BC PLENUM	2.3	2.0	2,515	1.98	2x2.3	460/3	Y	69.4	87.2	20.0	130	79.8/63.5	54.7/53.3	20.0	44	16	470	1	800	AAON H3	1
AH-A102	MECH A201	COMMUNITY ROOM A102	30	170	8	400	BC PLENUM	0.6	0.5	1,098	0.09	1.34	460/3	Y	54.9	123.1	2.0	130	83.7/64.5	54.35/53.24	2.0	44	13	200	3/4	405	AAON H3	
AH-MEDIA	MECH A201	MEDIA CENTER B132	1,200	1,200	8	10,800	BC PLENUM	2.4	1.3	1,429	7.4	10.0	460/3	Y	71.9	127.8	30.0	130	79.5/63.5	54.7/53.2	42.0	44	16	500	2	3,580	AAON M2	3
AH-B150	MECH B301	CLASSROOM B150	125	470	8	1,300	BC PLENUM	1.4	0.5	1,876	0.53	1.34	460/3	Y	58.0	120.9	6.0	130	83.1/64.5	54.13/52.87	6.0	44	14	370	1	544	AAON H3	
AH-B144	MECH B301	CLASSROOM B144	125	470	8	900	BC PLENUM	1.0	0.5	1,497	0.26	1.34	460/3	Y	49.6	116.9	5.0	130	85.3/65.0	54.2/53.0	5.0	44	14	420	1	405	AAON H3	
AH-B145	MECH B301	COMMONS B145/HALL B143/B147	140	140	8	725	BC PLENUM	0.9	0.5	1,343	0.19	1.34	460/3	Y	67.5	124.1	3.5	130	80.7/64	54.1/53.2	3.5	44	16	350	3/4	405	AAON H3	
AH-B146	MECH B301	CLASSROOM B146	125	470	8	960	BC PLENUM	1.1	0.5	1,546	0.29	1.34	460/3	Y	50.8	115.6	2.0	130	84.9/65	55.07/53.77	4.5	44	13	440	1	405	AAON H3	
AH-B148	MECH B301	CLASSROOM B148	125	470	8	1,300	BC PLENUM	1.4	0.5	1,876	0.53	1.34	460/3	Y	58.0	120.9	6.0	130	83.1/64.5	54.13/52.87	6.0	44	16	370	1	544	AAON H3	
AH-B149	MECH B301	MULTIPURPOSE B149	125	470	8	1,300	BC PLENUM	1.4	0.5	1,876	0.53	1.34	460/3	Y	58.0	120.9	6.0	130	83.1/64.5	54.13/52.87	6.0	44	14	370	1	544	AAON H3	
AH-C107	MECH C300	CLASSROOM C107	125	470	8	900	BC PLENUM	1.0	0.5	1,497	0.26	1.34	460/3	Y	49.3	116.7	4.2	130	85.3/65	54.89/53.64	4.2	44	14	420	1	405	AAON H3	
AH-C113	MECH C300	CLASSROOM C113	125	470	8	1,300	BC PLENUM	1.4	0.5	1,876	0.53	1.34	460/3	Y	58.0	120.9	6.0	130	83.1/64.5	54.13/52.87	6.0	44	14	370	1	544	AAON H3	
AH-C112	MECH C300	MULTIPURPOSE C112	125	470	8	1,300	BC PLENUM	1.4	0.5	1,876	0.53	1.34	460/3	Y	58.0	120.8	5.0	130	83.1/64.5	54.81/53.54	5.0	44	16	370	1	544	AAON H3	
AH-C111	MECH C300	CLASSROOM C111	125	470	8	1,300	BC PLENUM	1.4	0.5	1,876	0.53	1.34	460/3	Y	58.0	120.9	6.0	130	84/64.5	54.1/52.9	6.0	44	14	370	1	544	AAON H3	
AH-C109	MECH C300	CLASSROOM C109	125	470	8	1,100	BC PLENUM	1.2	0.5	1,693	0.39	1.34	460/3	Y	54.4	115.7	5.4	130	81.8/64	55.15/53.68	5.4	44	13	510	1	405	AAON H3	
AH-C108	MECH C300	COMMONS C108/HALL C106/110	135	135	8	725	BC PLENUM	0.9	0.5	1,343	0.19	1.34	460/3	Y	67.9	120.6	3.5	130	80.6/64.0	54.1/53.2	3.5	44	16	350	1	405	AAON H3	
AH-CAFÉ	MECH A200	CAFETERIA A103	600	5,060	8	7,200	BC PLENUM	1.5	1.0	1,703	1.6	5.0	460/3	Y	39.8	114.7	37.0	130	79.7/63.5	54.88/53.38	37.0	44	14	430	2	900	AAON M2	3
AH-KITCH	MECH A200	KITCHEN A104	0	0	8	1,200	BC PLENUM	0.9	0.5	1,323	0.32	1.34	460/3	Y	60.0	100.0	6.0	130	-	-	-	-	-	550	1	392	AAON H3	
AH-BLDG	MECH A200	BUILDING SUPPORT	100	100	8	1,285	BC PLENUM	1.4	1.0	1,897	0.55	1.34	460/3	Y	71.0	123.9	4.5	130	83.1/64.5	55.09/53.87	4.5	44	16	380	1	544	AAON H3	
AH-STAGE	MECH A200	MUSIC ROOM / STAGE A113	65	440	8	900	BC PLENUM	1.1	0.5	1,553	0.29	1.34	460/3	Y	51.4	125.1	6.5	130	84.8/65	52.3/52.1	6.5	44	13	420	1	415	AAON H3	
AH-GYM	MECH A200	GYM A111	1,760	2,200	8	12,600	BC PLENUM	2.2	1.3	1,133	7.1	15.0	460/3	Y	68.1	123.8	60.0	130	83.5/64.5	53.79/52.86	60.0	44	16	475	2 1/2	4,153	AAON M2	3
AH-B231	MECH B300	CLASSROOM B231	125	470	8	1,200	BC PLENUM	1.4	0.5	1,809	0.47	1.34	460/3	Y	56.4	121.3	5.0	130	81/64	54.2/52.99	5.0	44	16	340	1	544	AAON H3	
AH-B230	MECH B300	COMMONS B230/HALL B224/B228	150	150	8	850	BC PLENUM	1.5	0.5	1,724	0.39	1.34	460/3	Y	68.4	122.8	4.5	130	80.4/64.0	54.7/53.3	4.5	44	14	390	1	405	AAON H3	
AH-B229	MECH B300	CLASSROOM B229	125	470	8	1,300	BC PLENUM	1.4	0.5	1,876	0.53	1.34	460/3	Y	58.0	120.8	5.5	130	84.3/64.5	54.46/53.20	5.5	44	16	370	1	544	AAON H3	
AH-B227	MECH B300	CLASSROOM B227	125	470	8	1,040	BC PLENUM	1.9	0.5	2,000	0.61	1.34	460/3	Y	53.5	127.3	5.0	130	85.3/65	54.49/53.36	5.0	44	13	480	1	417	AAON H3	
AH-B226	MECH B300	MULTIPURPOSE B226	125	470	8	900	BC PLENUM	1.0	0.5	1,497	0.26	1.34	460/3	Y	49.3	116.7	4.3	130	84.9/65	54.78/53.53	4.3	44	14	420	1	405	AAON H3	
AH-B225	MECH B300	CLASSROOM B225	125	470	8	960	BC PLENUM	1.6	0.5	1,800	0.45	1.34	460/3	Y	50.8	116.5	4.7	130	84.9/65	55.32/53.78	4.7	44	13	440	1	405	AAON H3	
AH-C207	MECH C300	CLASSROOM C207	125	470	8	960	BC PLENUM	1.1	0.5	1,546	0.29	1.34	460/3	Y	50.8	116.5	4.7	130	80.4/64	54.89/53.6	4.7	44	13	440	1	405	AAON H3	
AH-C208	MECH C300	COMMONS C208/HALL C206/C210	150	150	8	850	BC PLENUM	1.0	0.5	1,454	0.24	1.34	460/3	Y	68.0	122.6	3.8	130	80.4/64	54.8/53.8	3.8	44	13	390	1	405	AAON H3	
AH-C209	MECH C300	CLASSROOM C209	125	470	8	1,100	BC PLENUM	1.9	0.5	1,983	0.30	1.34	460/3	Y	54.4	123.2	5.0	130	83.1/64.5	54.06/52.7	5.0	44	16	510	1	415	AAON H3	
AH-C211	MECH C300	CLASSROOM C211	125	470	8	1,300	BC PLENUM	1.4	0.5	1,876	0.53	1.34	460/3	Y	58.0	120.8	5.5	130	83.5/64.5	54.46/53.2	5.5	44	16	370	1	544	AAON H3	
AH-C212	MECH C300	MULTIPURPOSE C212	125	470	8	1,200	BC PLENUM	2.0	0.5	2,077	0.70	1.34	460/3	Y	56.4	122.6	5.0	130	83.5/64.5	54.80/53.35	5.0	44	16	550	1	415	AAON H3	
AH-C213	MECH C300	CLASSROOM C213	125	470	8	1,200	BC PLENUM	2.0	0.5	2,077	0.70	1.34	460/3	Y	56.4	122.6	5.0	130	83.5/64.5	54.80/53.35	5.0	44	16	550	1	415	AAON H3	
AH-B250	MECH B301	CLASSROOM B250	125	470	8	1,200	BC PLENUM	2.0	0.5	2,077	0.70	1.34	460/3	Y	56.4	122.6	5.0	130	83.5/64.5	54.80/53.35	5.0	44	16	550	1	415	AAON H3	
AH-B249	MECH B301	MULTIPURPOSE B249	125	470	8	1,200	BC PLENUM	2.0	0.5	2,077	0.70	1.34	460/3	Y	56.4	122.6	5.0	130	83.1/64.5	54.80/53.35	5.0	44	16	550	1	415	AAON H3	
AH-B248	MECH B301	CLASSROOM B248	125	470	8	1,300	BC PLENUM	1.4	0.5	1,876	0.53	1.34	460/3	Y	58.0	120.9	6.0	130	85.3/65	54.13/52.87	6.0	44	14	370	1	544	AAON H3	
AH-B246	MECH B301	CLASSROOM B246	125	470	8	900	BC PLENUM	1.0	0.5	1,497	0.26	1.34	460/3	Y	49.3	116.7	4.2	130	80.4/64	54.89/53.64	4.2	44	14	420	1	405	AAON H3	
AH-B245	MECH B301	COMMONS B245/HALL B243/B247	150	150	8	850	BC PLENUM	1.0	0.5	1,454	0.24	1.34	460/3	Y	68.0	122.6	3.8	130	80.4/64	54.84/53.78	3.8	44	13	390	1	405	AAON H3	
AH-B244	MECH B301	CLASSROOM B244	125	470	8	960	BC PLENUM	1.7	0.5	1,891	0.52	1.34	460/3	Y	52.1	123.8	4.5	130	84.6/64.5	53.68/52.4	4.5	44	16	460	1	415	AAON H3	
AH-OFCS	MEDIA CENTER	OFFICES	100	100	8	800	FORWARD CURVED	-	0.5	-	-	-	208/1	Y	60.0	103.9	2.5	130	79.7/63.5	54.9/54.1	2.5	44	14	425	3/4	145	CARRIER 42DD	2

GENERAL NOTES:

A. MINIMUM OSA CALCULATED BASED ON CODE AND ASHRAE STANDARD 62.

B. DUAL HEATING/COOLING COILS BASED ON MAXIMUM FACE VELOCITY OF 500 FPM, 0.5 IN WG MAXIMUM AIR PRESSURE DROP AND 12 FT WG MAXIMUM WATER PRESSURE DROP.

C. PROVIDE SCCR SUFFICIENT TO MEET THE AVAILABLE FAULT CURRENT AT THE PANELBOARD OR SWITCHBOARD FROM WHICH THE UNIT IS FED. COORDINATE WITH ELECTRICAL DRAWINGS AND ELECTRICAL CONTRACTOR.

D. ALL FANS TO BE DIRECT DRIVE UNLESS NOTED OTHERWISE.

NOTES:

1. UNIT TO HAVE TOP DISCHARGE IN LIEU OF STANDARD END DISCHARGE.
2. EXTERNAL STATIC PRESSURE IS 0.4".
3. UNIT PROVIDED WITH VFD.

© 2014 PIVOT ARCHITECTURE

PRINTED ON: 10/23/2014 3:28:18 PM FROM FILE: C:\Revit Local Files\13-1532_HES MEP14\13-1532_HES MEP14_alacy.hansen.rvt

PIVOT ARCHITECTURE

REGISTERED PROFESSIONAL ENGINEER 18329PE OREGON JAN 19 2010 NICHOLAS P. COLLINS, JR.

EXPIRES: 12-31-15

10-23-2014

PAE

Portland | San Francisco | Seattle

pae-engineers.com

HOWARD RECONCILED SET

4J EUGENE SCHOOL DISTRICT
700 HOWARD AVE, EUGENE, OREGON 97404

HOWARD ELEMENTARY SCHOOL

EQUIPMENT SCHEDULE - MECHANICAL

PROJECT #	1320
ISSUE DATE:	10/28/2014
DRAWN	SMH
CHECKED	NPC

REVISIONS

M003

© 2014 PIVOT ARCHITECTURE

VENTILATION SCHEDULE - MULTIPLE SPACES - OREGON

AH-BLDG

LOCATION	FLOOR AREA (SF)	PRIMARY AIRFLOW RATE (CFM)	OCCUPANCY CLASSIFICATION	PEOPLE OUTDOOR AIRFLOW RATE Rp (CFM/PERSON)	AREA OUTDOOR AIRFLOW RATE Ra (CFM/SF)	DEFAULT OCCUPANT DENSITY (PEOPLE/1000SF)	CODE POPULATION	DESIGN POPULATION	OUTDOOR AIRFLOW RATE Vbz (CFM)	ZONE AIR DISTRIBUTION EFFECTIVENESS Ez	OUTDOOR AIR INTAKE Voz (CFM)	PRIMARY OUTDOOR AIR FRACTION Zp	NOTES
Custodial	553	550	Office spaces	5	0.06	5	2.8	2.8	47.0	0.8	59	0.11	
Lost & Found	115	75	Office spaces	5	0.06	5	0.6	1.0	11.9	0.8	15	0.20	
PE Ofc/Stg	424	250	Office spaces	5	0.06	5	2.1	2.1	36.0	0.8	46	0.18	
Building Storage	837	510	Storage	0	0.00	0	0.0	0.0	0.0	0.8	0	0.00	
TOTALS:	1929	1385					5	6	95		120	Zp max = 0.20	

TOTAL AIRFLOW: 1385
SYSTEM POPULATION: 5

SYSTEM VENTILATION EFFICIENCY - Ev: 0.95
OCCUPANT DIVERSITY - D: 0.85
UNCORRECTED OUTDOOR AIR INTAKE - Vou: 91
CODE REQUIRED OUTDOOR AIR INTAKE FLOWRATE - Vot: 96

GENERAL NOTES:
1. SYSTEM OUTDOOR AIR CALCULATION IS BASED ON THE SECTION 403 OF THE 2014 OREGON MECHANICAL SPECIALTY CODE.
2. REFER TO AIR HANDLING UNIT SCHEDULE FOR ACTUAL OUTDOOR AIR FLOW RATE.

NOTES:
A. DESIGN OCCUPANCY REPRESENTS THE AVERAGE OCCUPANCY, WHICH IS NOT LESS THAN 1/2 THE CODE OCCUPANCY.

PIVOT ARCHITECTURE

REGISTERED PROFESSIONAL ENGINEER 18329PE OREGON JAN 19 2001 NICHOLAS P. COLLINS JR.
10-23-2014
EXPIRES: 12-31-15

PAE
Portland | San Francisco | Seattle
pae-engineers.com

HOWARD RECONCILED SET
4J EUGENE SCHOOL DISTRICT
700 HOWARD AVE, EUGENE, OREGON 97404
HOWARD ELEMENTARY SCHOOL

VENTILATION SCHEDULE - MECHANICAL

PROJECT #	1330	REVISIONS
ISSUE DATE:	10/28/2014	
DRAWN:	SMR	
CHECKED:	NPC	

M004

PRINTED ON: 10/23/2014 3:29:19 PM FROM FILE: C:\Revit Local Files\13-1532_HES MEP\4\13-1532_HES MEP14_stacy.hansen.rvt

© 2014 PIVOT ARCHITECTURE

VENTILATION SCHEDULE - MULTIPLE SPACES - OREGON

AH-ADMIN - MAX OSA

LOCATION	FLOOR AREA (SF)	PRIMARY AIRFLOW RATE (CFM)	OCCUPANCY CLASSIFICATION	PEOPLE OUTDOOR AIRFLOW RATE Rp (CFM/PERSON)	AREA OUTDOOR AIRFLOW RATE Ra (CFM/SF)	DEFAULT OCCUPANT DENSITY (PEOPLE/1000SF)	CODE POPULATION	DESIGN POPULATION	OUTDOOR AIRFLOW RATE Vbz (CFM)	ZONE AIR DISTRIBUTION EFFECTIVENESS Ez	OUTDOOR AIR INTAKE Voz (CFM)	PRIMARY OUTDOOR AIR FRACTION Zp	NOTES
Lobby	967	1040	Main entry lobbies	5	0.06	10	9.7	9.7	106.4	0.8	133	0.13	
Secretary	112	175	Office spaces	5	0.06	5	0.6	1.0	11.7	0.8	15	0.09	
Principal	173	270	Office spaces	5	0.06	5	0.9	1.0	15.4	0.8	20	0.07	
Conference	199	255	Conference rooms	5	0.06	50	10.0	10.0	61.7	0.8	78	0.31	
Staff Room	680	640	Office spaces	5	0.06	5	3.4	3.4	57.8	0.8	73	0.11	
Changing	148	150	Locker/dressing roomsg	--	--	--	0.0	-	0.0	0.8	0	0.00	
Workroom	404	310	Office spaces	5	0.06	5	2.0	2.0	34.3	0.8	43	0.14	
Reception	612	460	Office spaces	5	0.06	5	3.1	3.1	52.0	0.8	66	0.14	
Quiet	36	75	Office spaces	5	0.06	5	0.2	1.0	7.2	0.8	9	0.12	
Sensory Room	86	75	Office spaces	5	0.06	5	0.4	1.0	10.2	0.8	13	0.17	
Small Group B116	188	180	Classrooms (age 5-8)	10	0.12	25	4.7	4.7	69.6	0.8	87	0.48	
Small Group B216	290	300	Classrooms (age 5-8)	10	0.12	25	7.3	7.3	107.3	0.8	135	0.45	
Lactation	57	75	Office spaces	5	0.06	5	0.3	1.0	8.4	0.8	11	0.15	
Health	154	125	Office spaces	5	0.06	5	0.8	1.0	14.2	0.8	18	0.14	
Volunteer	94	75	Office spaces	5	0.06	5	0.5	1.0	10.6	0.8	14	0.19	
Motor Skills	341	340	Office spaces	5	0.06	5	1.7	1.7	29.0	0.8	37	0.11	
Office B107	92	75	Office spaces	5	0.06	5	0.5	1.0	10.5	0.8	14	0.19	
Workroom B218	96	80	Office spaces	5	0.06	5	0.5	1.0	10.8	0.8	14	0.18	
				-	-	-	-	-	-		-	-	
TOTALS:	4729	4700					46	51	617		780	Zp max = 0.48	

TOTAL AIRFLOW: 4690
SYSTEM POPULATION: 20

SYSTEM VENTILATION EFFICIENCY - Ev: 0.66
OCCUPANT DIVERSITY - D: 0.39
UNCORRECTED OUTDOOR AIR INTAKE - Vou: 427
CODE REQUIRED OUTDOOR AIR INTAKE FLOWRATE - Vot: 645

GENERAL NOTES:
1. SYSTEM OUTDOOR AIR CALCULATION IS BASED ON THE SECTION 403 OF THE 2014 OREGON MECHANICAL SPECIALTY CODE.
2. REFER TO AIR HANDLING UNIT SCHEDULE FOR ACTUAL OUTDOOR AIR FLOW RATE.

NOTES:
A. DESIGN OCCUPANCY REPRESENTS THE AVERAGE OCCUPANCY, WHICH IS NOT LESS THAN 1/2 THE CODE OCCUPANCY.

VENTILATION SCHEDULE - MULTIPLE SPACES - OREGON

AH-ADMIN - MIN OSA

LOCATION	FLOOR AREA (SF)	PRIMARY AIRFLOW RATE (CFM)	OCCUPANCY CLASSIFICATION	PEOPLE OUTDOOR AIRFLOW RATE Rp (CFM/PERSON)	AREA OUTDOOR AIRFLOW RATE Ra (CFM/SF)	DEFAULT OCCUPANT DENSITY (PEOPLE/1000SF)	CODE POPULATION	DESIGN POPULATION	OUTDOOR AIRFLOW RATE Vbz (CFM)	ZONE AIR DISTRIBUTION EFFECTIVENESS Ez	OUTDOOR AIR INTAKE Voz (CFM)	PRIMARY OUTDOOR AIR FRACTION Zp	NOTES
Lobby	967	1040	Main entry lobbies	5	0.06	10	9.7	9.7	106.4	0.8	133	0.13	
Secretary	112	175	Office spaces	5	0.06	5	0.6	1.0	11.7	0.8	15	0.09	
Principal	173	270	Office spaces	5	0.06	5	0.9	1.0	15.4	0.8	20	0.07	
Conference	199	255	Conference rooms	5	0.06	50	10.0	1.0	16.9	0.8	22	0.09	
Staff Room	680	640	Office spaces	5	0.06	5	3.4	3.4	57.8	0.8	73	0.11	
Changing	148	150	Locker/dressing roomsg	--	--	--	0.0	-	0.0	0.8	0	0.00	
Workroom	404	310	Office spaces	5	0.06	5	2.0	2.0	34.3	0.8	43	0.14	
Reception	612	460	Office spaces	5	0.06	5	3.1	3.1	52.0	0.8	66	0.14	
Quiet	36	75	Office spaces	5	0.06	5	0.2	1.0	7.2	0.8	9	0.12	
Sensory Room	86	75	Office spaces	5	0.06	5	0.4	1.0	10.2	0.8	13	0.17	
Small Group B116	188	180	Classrooms (age 5-8)	10	0.12	25	4.7	1.0	32.6	0.8	41	0.23	
Small Group B216	290	300	Classrooms (age 5-8)	10	0.12	25	7.3	1.0	44.8	0.8	56	0.19	
Lactation	57	75	Office spaces	5	0.06	5	0.3	1.0	8.4	0.8	11	0.15	
Health	154	125	Office spaces	5	0.06	5	0.8	1.0	14.2	0.8	18	0.14	
Volunteer	94	75	Office spaces	5	0.06	5	0.5	1.0	10.6	0.8	14	0.19	
Motor Skills	341	340	Office spaces	5	0.06	5	1.7	1.7	29.0	0.8	37	0.11	
Office B107	92	75	Office spaces	5	0.06	5	0.5	1.0	10.5	0.8	14	0.19	
Workroom B218	96	80	Office spaces	5	0.06	5	0.5	1.0	10.8	0.8	14	0.18	
TOTALS:	4729	4700					46	32	473		599	Zp max = 0.23	

TOTAL AIRFLOW: 4690
SYSTEM POPULATION: 20

SYSTEM VENTILATION EFFICIENCY - Ev: 0.92
OCCUPANT DIVERSITY - D: 0.63
UNCORRECTED OUTDOOR AIR INTAKE - Vou: 410
CODE REQUIRED OUTDOOR AIR INTAKE FLOWRATE - Vot: 447

GENERAL NOTES:
1. SYSTEM OUTDOOR AIR CALCULATION IS BASED ON THE SECTION 403 OF THE 2014 OREGON MECHANICAL SPECIALTY CODE.
2. REFER TO AIR HANDLING UNIT SCHEDULE FOR ACTUAL OUTDOOR AIR FLOW RATE.

NOTES:
A. DESIGN OCCUPANCY REPRESENTS THE AVERAGE OCCUPANCY, WHICH IS NOT LESS THAN 1/2 THE CODE OCCUPANCY. SPACES LISTED WITH A DESIGN POPULATION OF ONE WITH DEFAULT OCCUPANY GREATER THAN ONE HAVE DEMAND CONTROL VENTILATION.

PIVOT ARCHITECTURE

REGISTERED PROFESSIONAL ENGINEER 18329PE
NICHOLAS P. COLLINS JR.
10-23-2014
EXPIRES 12-31-15

PAE
Portland | San Francisco | Seattle
pae-engineers.com

HOWARD RECONCILED SET
4J EUGENE SCHOOL DISTRICT
700 HOWARD AVE, EUGENE, OREGON 97404
HOWARD ELEMENTARY SCHOOL

VENTILATION SCHEDULE - MECHANICAL

PROJECT #	1306
ISSUE DATE:	10/28/2014
DRAWN:	SMR
CHECKED:	NPC
REVISIONS	

M005

PRINTED ON: 10/23/2014 3:29:21 PM FROM FILE: C:\Revit Local Files\13-1532_HES MEP14\13-1532_HES MEP14_stacy.hansen.rvt

© 2014 PIVOT ARCHITECTURE

VENTILATION SCHEDULE - SINGLE ZONE SPACES - OREGON

SINGLE ZONE UNITS - MAX OSA

LOCATION	FLOOR AREA (SF)	PRIMARY AIRFLOW RATE (CFM)	OCCUPANCY CLASSIFICATION	PEOPLE OUTDOOR AIRFLOW RATE Rp (CFM/PERSON)	AREA OUTDOOR AIRFLOW RATE Ra (CFM/SF)	DEFAULT OCCUPANT DENSITY (PEOPLE/1000SF)	CODE POPULATION	DESIGN POPULATION	OUTDOOR AIRFLOW RATE Vbz (CFM)	ZONE AIR DISTRIBUTION EFFECTIVENESS Ez	OUTDOOR AIR INTAKE Vot (CFM)	NOTES
Music Room/Stage	1068	900	Music/theater/dance	10	0.06	35	37.4	31.0	374.1	1.0	375	LOW RETN
Gym	5863	12600	Gym, stadium, arena (play area)	--	0.30	--	0.0	780.0	1758.9	1.0	1759	LOW RETN
Community Room	426	400	Conference rooms	5	0.06	50	21.3	12.0	85.6	0.8	107	
Cafeteria	3310	7200	Cafeteria, fast food	8	0.18	100	331.0	460.0	4045.8	1.0	4046	LOW RETN
Life Skills B125A	976	860	Classrooms (age 5-8)	10	0.12	25	24.4	31.0	427.1	0.8	534	
Classroom B126	977	800	Classrooms (age 5-8)	10	0.12	25	24.4	31.0	427.2	0.8	535	
Classroom B127	993	960	Classrooms (age 5-8)	10	0.12	25	24.8	31.0	429.2	0.8	537	
Commons B130/Hallway B124/B128/B119	1857	725	Corridors	--	0.06	--	0.0	12.0	111.4	0.8	140	
Classroom B131	987	1300	Classrooms (age 5-8)	10	0.12	25	24.7	31.0	428.4	0.8	536	
Classroom B129	988	1300	Classrooms (age 5-8)	10	0.12	25	24.7	31.0	428.6	0.8	536	
Classroom C107	987	900	Classrooms (age 5-8)	10	0.12	25	24.7	31.0	428.4	0.8	536	
Commons C108/Hallway C106/C110/C100	1792	725	Corridors	--	0.06	--	0.0	12.0	107.5	0.8	135	
Classroom C109	988	1100	Classrooms (age 5-8)	10	0.12	25	24.7	31.0	428.6	0.8	536	
Classroom C111	993	1300	Classrooms (age 5-8)	10	0.12	25	24.8	31.0	429.2	0.8	537	
Multipurpose C112	978	1300	Classrooms (age 5-8)	10	0.12	25	24.5	31.0	427.4	0.8	535	
Classroom C113	977	1300	Classrooms (age 5-8)	10	0.12	25	24.4	31.0	427.2	0.8	535	
Classroom B144	987	900	Classrooms (age 5-8)	10	0.12	25	24.7	31.0	428.4	0.8	536	
Commons B145/Hallway B143/B147/B137	1804	725	Corridors	--	0.06	--	0.0	12.0	108.2	0.8	136	
Classroom B146	989	960	Classrooms (age 5-8)	10	0.12	25	24.7	31.0	428.7	0.8	536	
Classroom B148	993	1300	Classrooms (age 5-8)	10	0.12	25	24.8	31.0	429.2	0.8	537	
Multipurpose B149	977	1300	Classrooms (age 5-8)	10	0.12	25	24.4	31.0	427.2	0.8	535	
Classroom B150	977	1300	Classrooms (age 5-8)	10	0.12	25	24.4	31.0	427.2	0.8	535	
Classroom B225	977	960	Classrooms (age 5-8)	10	0.12	25	24.4	31.0	427.2	0.8	535	
Multipurpose B226	977	900	Classrooms (age 5-8)	10	0.12	25	24.4	31.0	427.2	0.8	535	
Classroom B227	993	1040	Classrooms (age 5-8)	10	0.12	25	24.8	31.0	429.2	0.8	537	
Commons B230/Hallway B224/228	1968	850	Corridors	--	0.06	--	0.0	12.0	118.1	0.8	148	
Classroom B229	1007	1300	Classrooms (age 5-8)	10	0.12	25	25.2	31.0	430.8	0.8	539	
Classroom B231	988	1200	Classrooms (age 5-8)	10	0.12	25	24.7	31.0	428.6	0.8	536	
Classroom B246	987	900	Classrooms (age 5-8)	10	0.12	25	24.7	31.0	428.4	0.8	536	
Classroom B248	993	1300	Classrooms (age 5-8)	10	0.12	25	24.8	31.0	429.2	0.8	537	
Commons B245/Hallway B243/B247/B237	1968	850	Corridors	--	0.06	--	0.0	12.0	118.1	0.8	148	
Multipurpose B249	977	1200	Classrooms (age 5-8)	10	0.12	25	24.4	31.0	427.2	0.8	535	
Classroom B250	976	1200	Classrooms (age 5-8)	10	0.12	25	24.4	31.0	427.1	0.8	534	
Classroom B244	1012	1000	Classrooms (age 5-8)	10	0.12	25	25.3	31.0	431.4	0.8	540	
Classroom C213	976	1200	Classrooms (age 5-8)	10	0.12	25	24.4	31.0	427.1	0.8	534	
Multipurpose C212	977	1200	Classrooms (age 5-8)	10	0.12	25	24.4	31.0	427.2	0.8	535	
Classroom C211	993	1300	Classrooms (age 5-8)	10	0.12	25	24.8	31.0	429.2	0.8	537	
Commons C208/HallwayC210/C206/C200	1963	850	Corridors	--	0.06	--	0.0	12.0	117.8	0.8	148	
Classroom C209	1012	1100	Classrooms (age 5-8)	10	0.12	25	25.3	31.0	431.4	0.8	540	
Classroom C207	981	960	Classrooms (age 5-8)	10	0.12	25	24.5	31.0	427.7	0.8	535	
				-	-	-	-	-	-		-	

GENERAL NOTES:

1. SYSTEM OUTDOOR AIR CALCULATION IS BASED ON THE SECTION 403 OF THE 2014 OREGON MECHANICAL SPECIALTY CODE.
2. REFER TO AIR HANDLING UNIT SCHEDULE FOR ACTUAL OUTDOOR AIR FLOW RATE.

NOTES:

A. DESIGN OCCUPANCY REPRESENTS THE AVERAGE OCCUPANCY, WHICH IS NOT LESS THAN 1/2 THE CODE OCCUPANCY.

VENTILATION SCHEDULE - MULTIPLE SPACES - OREGON

AH-MEDIA

LOCATION	FLOOR AREA (SF)	PRIMARY AIRFLOW RATE (CFM)	OCCUPANCY CLASSIFICATION	PEOPLE OUTDOOR AIRFLOW RATE Rp (CFM/PERSON)	AREA OUTDOOR AIRFLOW RATE Ra (CFM/SF)	DEFAULT OCCUPANT DENSITY (PEOPLE/1000SF)	CODE POPULATION	DESIGN POPULATION	OUTDOOR AIRFLOW RATE Vbz (CFM)	ZONE AIR DISTRIBUTION EFFECTIVENESS Ez	OUTDOOR AIR INTAKE Voz (CFM)	PRIMARY OUTDOOR AIR FRACTION Zp	NOTES
Media Center	5187	9850	Media center	10	0.12	25	129.7	65.0	1272.4	1.0	1273	0.13	LOW RETN
Commons 299	771	500	Corridors	--	0.06	--	0.0	0.0	46.3	1.0	47	0.09	LOW RETN
Media Workroom B133	200	150	Office spaces	5	0.06	5	1.0	1.0	17.0	0.8	22	0.15	LOW RETN
Hallway B232/B217/B219	954	690	Corridors	--	0.06	--	0.0	0.0	57.2	1.0	58	0.08	LOW RETN
TOTALS:	7112	11190					131	66	1393		1400	Zp max = 0.15	

TOTAL AIRFLOW: 10800
SYSTEM POPULATION: 62

SYSTEM VENTILATION EFFICIENCY - Ev: 1.00
OCCUPANT DIVERSITY - D: 0.94
UNCORRECTED OUTDOOR AIR INTAKE - Vou: 1,353
CODE REQUIRED OUTDOOR AIR INTAKE FLOWRATE - Vot: 1,353

GENERAL NOTES:

1. SYSTEM OUTDOOR AIR CALCULATION IS BASED ON THE SECTION 403 OF THE 2014 OREGON MECHANICAL SPECIALTY CODE.
2. REFER TO AIR HANDLING UNIT SCHEDULE FOR ACTUAL OUTDOOR AIR FLOW RATE.

NOTES:

A. DESIGN OCCUPANCY REPRESENTS THE AVERAGE OCCUPANCY, WHICH IS NOT LESS THAN 1/2 THE CODE OCCUPANCY.

PIVOT ARCHITECTURE

REGISTERED PROFESSIONAL ENGINEER 18329PE NICHOLAS P. COLLINS JR. 10-23-2014 EXPIRES: 12-31-15

PAE
Portland | San Francisco | Seattle
pae-engineers.com

HOWARD RECONCILED SET
4J EUGENE SCHOOL DISTRICT
700 HOWARD AVE, EUGENE, OREGON 97404
HOWARD ELEMENTARY SCHOOL

VENTILATION SCHEDULE - MECHANICAL

PROJECT #	1336
ISSUE DATE:	10/28/2014
DRAWN:	SMM
CHECKED:	NPC

REVISIONS:

M006

PRINTED ON: 10/23/2014 3:29:22 PM FROM FILE: C:\Revit Local Files\13-1532_HES MEP14\13-1532_HES MEP14_stacy.hansen.rvt

VENTILATION SCHEDULE - SINGLE ZONE SPACES - OREGON

SINGLE ZONE UNITS - MIN OSA

LOCATION	FLOOR AREA (SF)	PRIMARY AIRFLOW RATE (CFM)	OCCUPANCY CLASSIFICATION	PEOPLE OUTDOOR AIRFLOW RATE Rp (CFM/PERSON)	AREA OUTDOOR AIRFLOW RATE Ra (CFM/SF)	DEFAULT OCCUPANT DENSITY (PEOPLE/1000SF)	CODE POPULATION	DESIGN POPULATION	OUTDOOR AIRFLOW RATE Vbz (CFM)	ZONE AIR DISTRIBUTION EFFECTIVENESS Ez	OUTDOOR AIR INTAKE Vot (CFM)	NOTES
Music Room/Stage	1068	900	Music/theater/dance	10	0.06	35	37.4	1.0	74.1	1.0	75	LOW RETN
Gym	5863	12600	Gym, stadium, arena (play area)	--	0.30	--	0.0	1.0	1758.9	1.0	1759	LOW RETN
Community Room	426	400	Conference rooms	5	0.06	50	21.3	1.0	30.6	0.8	39	
Cafeteria	3310	7200	Cafeteria, fast food	8	0.18	100	331.0	1.0	603.3	1.0	604	LOW RETN
Life Skills B125A	976	860	Classrooms (age 5-8)	10	0.12	25	24.4	1.0	127.1	0.8	159	
Classroom B126	977	800	Classrooms (age 5-8)	10	0.12	25	24.4	1.0	127.2	0.8	160	
Classroom B127	993	960	Classrooms (age 5-8)	10	0.12	25	24.8	1.0	129.2	0.8	162	
Commons B130/Hallway B124/B128/B119	1857	725	Corridors	--	0.06	--	0.0	12.0	111.4	0.8	140	
Classroom B131	987	1300	Classrooms (age 5-8)	10	0.12	25	24.7	1.0	128.4	0.8	161	
Classroom B129	988	1300	Classrooms (age 5-8)	10	0.12	25	24.7	1.0	128.6	0.8	161	
Classroom C107	987	900	Classrooms (age 5-8)	10	0.12	25	24.7	1.0	128.4	0.8	161	
Commons C108/Hallway C106/C110/C100	1792	725	Corridors	--	0.06	--	0.0	12.0	107.5	0.8	135	
Classroom C109	988	1100	Classrooms (age 5-8)	10	0.12	25	24.7	1.0	128.6	0.8	161	
Classroom C111	993	1300	Classrooms (age 5-8)	10	0.12	25	24.8	1.0	129.2	0.8	162	
Multipurpose C112	978	1300	Classrooms (age 5-8)	10	0.12	25	24.5	1.0	127.4	0.8	160	
Classroom C113	977	1300	Classrooms (age 5-8)	10	0.12	25	24.4	1.0	127.2	0.8	160	
Classroom B144	987	900	Classrooms (age 5-8)	10	0.12	25	24.7	1.0	128.4	0.8	161	
Commons B145/Hallway B143/B147/B137	1804	725	Corridors	--	0.06	--	0.0	12.0	108.2	0.8	136	
Classroom B146	989	960	Classrooms (age 5-8)	10	0.12	25	24.7	1.0	128.7	0.8	161	
Classroom B148	993	1300	Classrooms (age 5-8)	10	0.12	25	24.8	1.0	129.2	0.8	162	
Multipurpose B149	977	1300	Classrooms (age 5-8)	10	0.12	25	24.4	1.0	127.2	0.8	160	
Classroom B150	977	1300	Classrooms (age 5-8)	10	0.12	25	24.4	1.0	127.2	0.8	160	
Classroom B225	977	960	Classrooms (age 5-8)	10	0.12	25	24.4	1.0	127.2	0.8	160	
Multipurpose B226	977	900	Classrooms (age 5-8)	10	0.12	25	24.4	1.0	127.2	0.8	160	
Classroom B227	993	1040	Classrooms (age 5-8)	10	0.12	25	24.8	1.0	129.2	0.8	162	
Commons B230/Hallway B224/228	1968	850	Corridors	--	0.06	--	0.0	12.0	118.1	0.8	148	
Classroom B229	1007	1300	Classrooms (age 5-8)	10	0.12	25	25.2	1.0	130.8	0.8	164	
Classroom B231	988	1200	Classrooms (age 5-8)	10	0.12	25	24.7	1.0	128.6	0.8	161	
Classroom B246	987	900	Classrooms (age 5-8)	10	0.12	25	24.7	1.0	128.4	0.8	161	
Classroom B248	993	1300	Classrooms (age 5-8)	10	0.12	25	24.8	1.0	129.2	0.8	162	
Commons B245/Hallway B243/B247/B237	1968	850	Corridors	--	0.06	--	0.0	12.0	118.1	0.8	148	
Multipurpose B249	977	1200	Classrooms (age 5-8)	10	0.12	25	24.4	1.0	127.2	0.8	160	
Classroom B250	976	1200	Classrooms (age 5-8)	10	0.12	25	24.4	1.0	127.1	0.8	159	
Classroom B244	1012	1000	Classrooms (age 5-8)	10	0.12	25	25.3	1.0	131.4	0.8	165	
Classroom C213	976	1200	Classrooms (age 5-8)	10	0.12	25	24.4	1.0	127.1	0.8	159	
Multipurpose C212	977	1200	Classrooms (age 5-8)	10	0.12	25	24.4	1.0	127.2	0.8	160	
Classroom C211	993	1300	Classrooms (age 5-8)	10	0.12	25	24.8	1.0	129.2	0.8	162	
Commons C208/HallwayC210/C206/C200	1963	850	Corridors	--	0.06	--	0.0	12.0	117.8	0.8	148	
Classroom C209	1012	1100	Classrooms (age 5-8)	10	0.12	25	25.3	1.0	131.4	0.8	165	
Classroom C207	981	960	Classrooms (age 5-8)	10	0.12	25	24.5	1.0	127.7	0.8	160	
				-	-	-	-	-	-		-	

GENERAL NOTES:
1. SYSTEM OUTDOOR AIR CALCULATION IS BASED ON THE SECTION 403 OF THE 2014 OREGON MECHANICAL SPECIALTY CODE.
2. REFER TO AIR HANDLING UNIT SCHEDULE FOR ACTUAL OUTDOOR AIR FLOW RATE.

NOTES:
A. DESIGN OCCUPANCY REPRESENTS THE AVERAGE OCCUPANCY, WHICH IS NOT LESS THAN 1/2 THE CODE OCCUPANCY. SPACES LISTED WITH A DESIGN POPULATION OF ONE HAVE DEMAND CONTROL VENTILATION.

VENTILATION SCHEDULE - MULTIPLE SPACES - OREGON

AH-MEDIA MIN OSA

LOCATION	FLOOR AREA (SF)	PRIMARY AIRFLOW RATE (CFM)	OCCUPANCY CLASSIFICATION	PEOPLE OUTDOOR AIRFLOW RATE Rp (CFM/PERSON)	AREA OUTDOOR AIRFLOW RATE Ra (CFM/SF)	DEFAULT OCCUPANT DENSITY (PEOPLE/1000SF)	CODE POPULATION	DESIGN POPULATION	OUTDOOR AIRFLOW RATE Vbz (CFM)	ZONE AIR DISTRIBUTION EFFECTIVENESS Ez	OUTDOOR AIR INTAKE Voz (CFM)	PRIMARY OUTDOOR AIR FRACTION Zp	NOTES
Media Center	5187	9850	Media center	10	0.12	25	129.7	1.0	632.4	1.0	633	0.06	LOW RETN
Commons 299	771	500	Corridors	--	0.06	--	0.0	0.0	46.3	1.0	47	0.09	LOW RETN
Media Workroom B133	200	150	Office spaces	5	0.06	5	1.0	1.0	17.0	1.0	17	0.11	LOW RETN
Hallway B232/B217/B219	954	690	Corridors	--	0.06	--	0.0	0.0	57.2	1.0	58	0.08	LOW RETN
TOTALS:	7112	11190					131	2	753		755	Zp max = 0.11	

TOTAL AIRFLOW: 10800
SYSTEM POPULATION: 62

SYSTEM VENTILATION EFFICIENCY - Ev: 1.00
OCCUPANT DIVERSITY - D: 31.00
UNCORRECTED OUTDOOR AIR INTAKE - Vou: 1,203
CODE REQUIRED OUTDOOR AIR INTAKE FLOWRATE - Vot: 1,203

GENERAL NOTES:
1. SYSTEM OUTDOOR AIR CALCULATION IS BASED ON THE SECTION 403 OF THE 2014 OREGON MECHANICAL SPECIALTY CODE.
2. REFER TO AIR HANDLING UNIT SCHEDULE FOR ACTUAL OUTDOOR AIR FLOW RATE.

NOTES:
A. DESIGN OCCUPANCY REPRESENTS THE AVERAGE OCCUPANCY, WHICH IS NOT LESS THAN 1/2 THE CODE OCCUPANCY.

PIVOT ARCHITECTURE

REGISTERED PROFESSIONAL ENGINEER 18329PE OREGON JAMES P. COLLINS JR. 10-23-2014 EXPIRES: 12-31-15

PAE
Portland | San Francisco | Seattle
pae-engineers.com

HOWARD RECONCILED SET
4J EUGENE SCHOOL DISTRICT
700 HOWARD AVE, EUGENE, OREGON 97404
HOWARD ELEMENTARY SCHOOL

VENTILATION SCHEDULE - MECHANICAL

PROJECT #	1336
ISSUE DATE:	10/28/2014
DRAWN:	SMM
CHECKED:	NPC

REVISIONS:

M007

© 2014 PIVOT ARCHITECTURE

PRINTED ON: 10/23/2014 3:29:24 PM FROM FILE: C:\Revit Local Files\13-1532_HES MEP\413-1532_HES MEP14_stacy.hansen.rvt

© 2014 PIVOT ARCHITECTURE

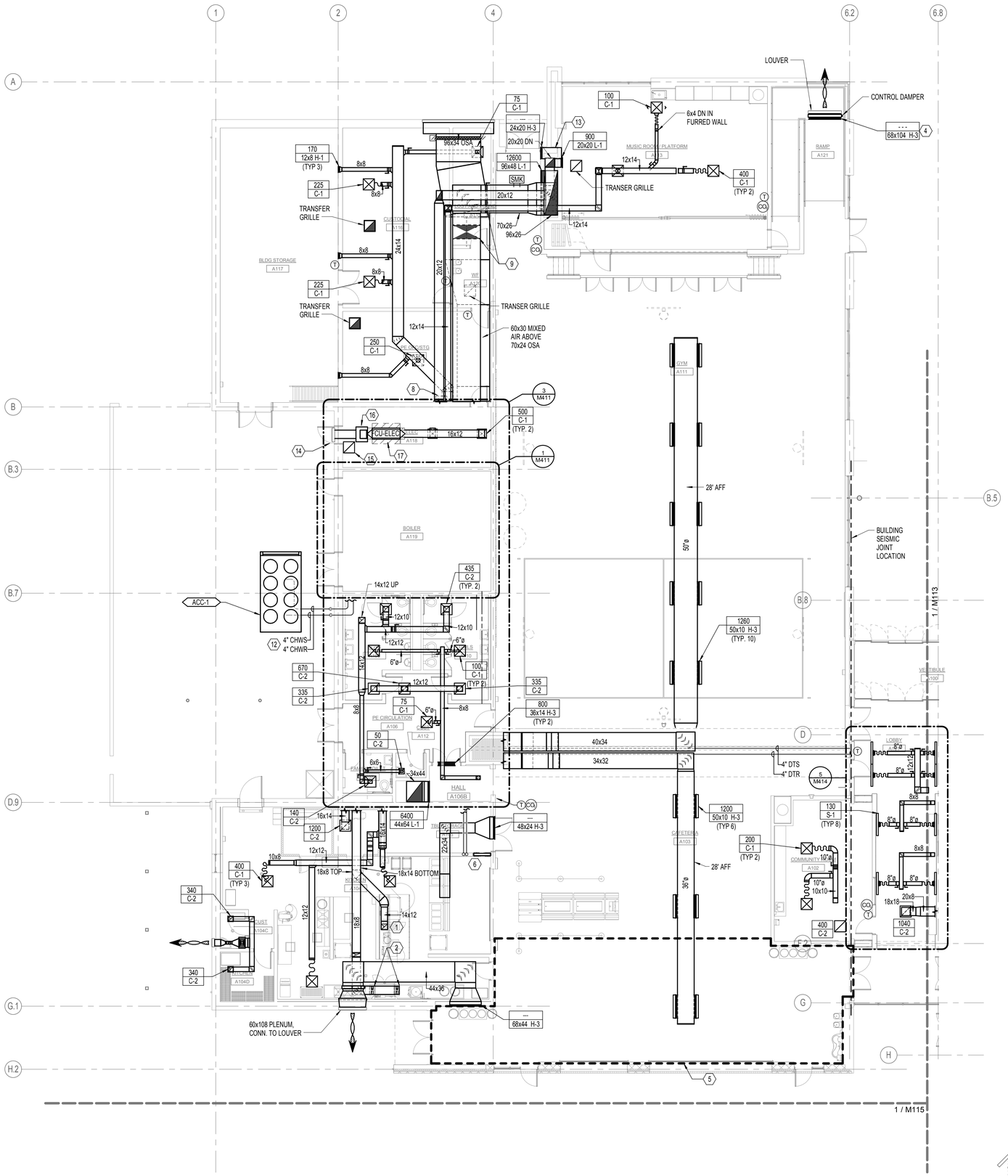

1 SECTOR A MECHANICAL PLAN - FIRST FLOOR

1/8" = 1'-0"

GENERAL NOTES:

A. BRANCH RUNOUT PIPING TO TU HEATING COILS, CABINET UNIT HEATERS AND UNIT HEATER TO BE 3/4-INCH UNLESS OTHERWISE NOTED.

B. PROVIDE TRANSFER OPENINGS FOR RETURN AIR SIZED AT 300 FPM IN FULL HEIGHT WALLS SEE ARCHITECTURAL DRAWINGS.

C. PROVIDE VOLUME DAMPER AT EACH BRANCH OUTLET/INLET.

D. ALL WORK SHALL BE COORDINATED WITH ALL TRADES INVOLVED. OFFSETS IN PIPING AND DUCTS (INCLUDING DIVIDED DUCTS) AND TRANSITIONS AROUND OBSTRUCTIONS SHALL BE PROVIDED AT NO ADDITIONAL COST TO THE OWNER.

E. VERIFY ALL EQUIPMENT CONNECTIONS WITH MANUFACTURER'S CERTIFIED DRAWINGS. VERIFY AND PROVIDE DUCT TRANSITIONS TO FURNISHED EQUIPMENT. FIELD VERIFY AND COORDINATE ALL DIMENSIONS BEFORE FABRICATION.

F. REFER TO ARCHITECTURAL REFLECTED CEILING PLANS FOR EXACT LOCATIONS OF AIR DEVICES.

G. ALL DETAILS APPLY TO THIS SHEET WHETHER TAGGED OR NOT.

H. PIPING SHALL BE LARGEST SIZE SHOWN UNTIL SMALLER PIPE SIZE IS INDICATED INCLUDING MAINS AND BRANCH PIPING.

NOTES:

1. REFERENCE FS-103, NOTE M1 FOR HOOD CONNECTION.
2. REFERENCE FS-103, NOTE M2 FOR WAREWASHER HOOD CONNECTION.
3. RELIEF GRILLE WITH AUTO DAMPER.
4. SEE ARCH ELEVATIONS FOR GRILLE MOUNTING HEIGHT.
5. RADIANTLY HEATED FLOOR AREA.
6. RADIANT FLOOR HEATING MANIFOLD.
7. LINE ENTIRE DUCT RISER INCLUDING BEHIND RETURN GRILLE.
8. OPEN-ENDED DUCT.
9. 70x26 RA AND OSA AUTO DAMPERS FOR AH-GYM ECONOMIZER CONTROL.
10. 3/4" CONDENSATE DRAIN UP TO MECH PLATFORM.
11. TERMINATE CONDENSATE DRAIN AT MOP SINK.
12. PROVIDE HEAT TRACE FOR ALL EXTERIOR CHILLED WATER PIPING.
13. TRANSFER GRILLE AT 26 FT AFF, CONNECTED TO OPEN-ENDED DUCT.
14. 30X24 OSA PLENUM.
15. 18X18 C-2 TRANSFER GRILLE IN CEILING, CONNECTED TO RELIEF DUCT UP TO MECH PLATFORM.
16. MIXING BOX FURNISHED WITH FCU INCLUDES OSA AND RA AUTO DAMPERS, ACTUATION BY OWNER.
17. ROUTE RS AND RL PIPING FROM FCU UP TO ACCU-ELEC IN MECHANICAL PLATFORM A200.

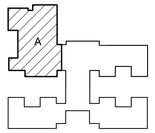

PIVOT ARCHITECTURE

REGISTERED PROFESSIONAL ENGINEER 18329PE
NICHOLAS P. COLLINS, JR.
10-23-2014
EXPIRES 12-31-15

PAE
Portland | San Francisco | Seattle
pae-engineers.com

HOWARD RECONCILED SET
EUGENE SCHOOL DISTRICT
700 HOWARD AVE, EUGENE, OREGON 97404
4J
HOWARD ELEMENTARY SCHOOL

SECTOR A MECHANICAL PLAN - FIRST FLOOR

PROJECT #	1330
ISSUE DATE:	10/28/2014
DRAWN:	SMH
CHECKED:	NPC

REVISIONS

M111

PRINTED ON: 10/23/2014 4:46:50 PM FROM FILE: C:\Revit Local Files\13-1532_HES MEP\4113-1532_HES MEP14_alacx.hansen.rvt

© 2014 PIVOT ARCHITECTURE

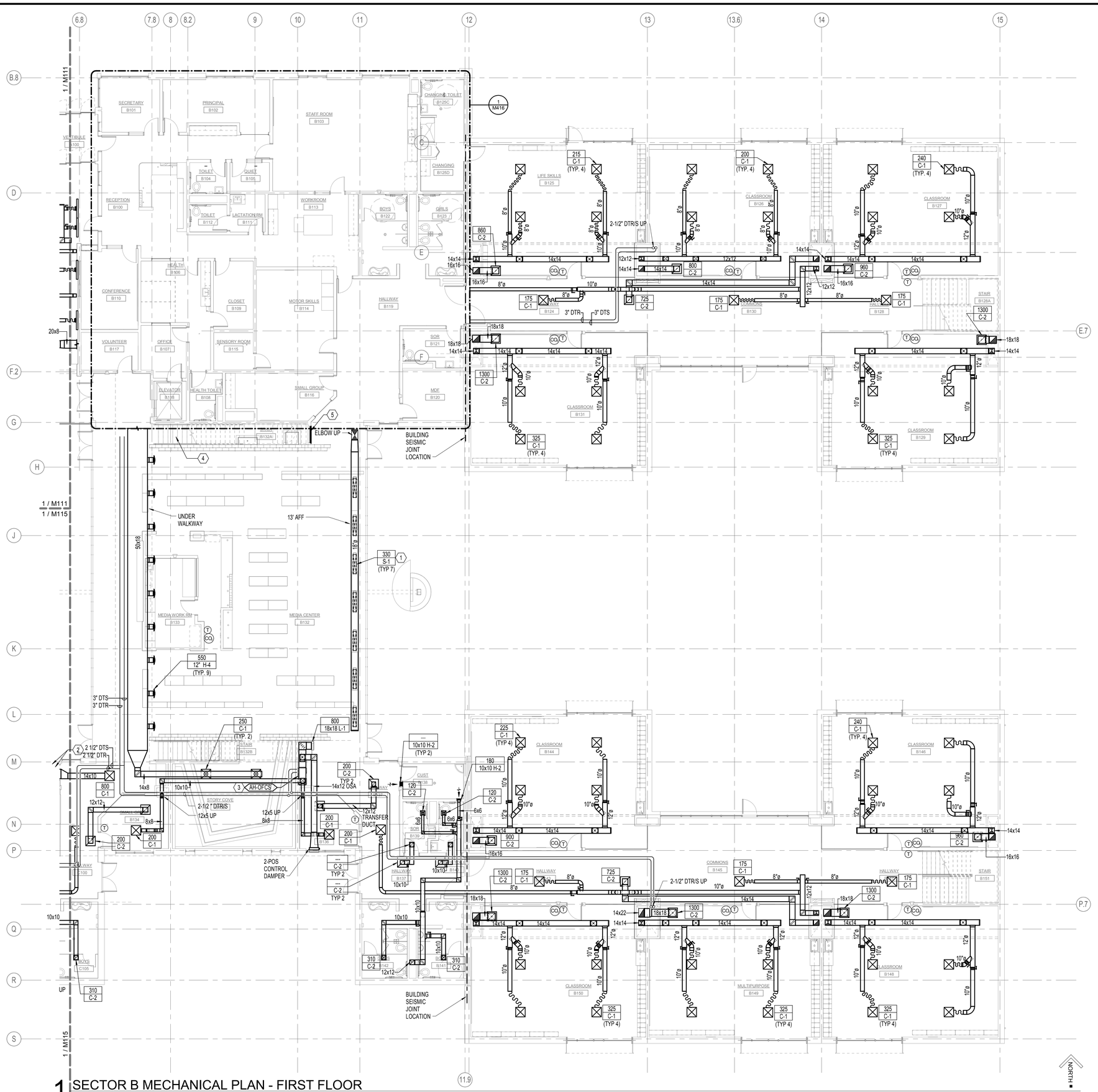

1 SECTOR B MECHANICAL PLAN - FIRST FLOOR
1/8" = 1'-0"

GENERAL NOTES:

A. BRANCH RUNOUT PIPING TO TU HEATING COILS, CABINET UNIT HEATERS AND UNIT HEATER TO BE 3/4-INCH UNLESS OTHERWISE NOTED.

B. PROVIDE TRANSFER OPENINGS FOR RETURN AIR SIZED AT 300 FPM IN FULL HEIGHT WALLS SEE ARCHITECTURAL DRAWINGS.

C. PROVIDE VOLUME DAMPER AT EACH BRANCH OUTLET/INLET.

D. ALL WORK SHALL BE COORDINATED WITH ALL TRADES INVOLVED. OFFSETS IN PIPING AND DUCTS (INCLUDING DIVIDED DUCTS) AND TRANSITIONS AROUND OBSTRUCTIONS SHALL BE PROVIDED AT NO ADDITIONAL COST TO THE OWNER.

E. VERIFY ALL EQUIPMENT CONNECTIONS WITH MANUFACTURER'S CERTIFIED DRAWINGS. VERIFY AND PROVIDE DUCT TRANSITIONS TO FURNISHED EQUIPMENT. FIELD VERIFY AND COORDINATE ALL DIMENSIONS BEFORE FABRICATION.

F. REFER TO ARCHITECTURAL REFLECTED CEILING PLANS FOR EXACT LOCATIONS OF AIR DEVICES.

G. ALL DETAILS APPLY TO THIS SHEET WHETHER TAGGED OR NOT.

H. PIPING SHALL BE LARGEST SIZE SHOWN UNTIL SMALLER PIPE SIZE IS INDICATED INCLUDING MAINS AND BRANCH PIPING.

NOTES:

1. CONNECT DIFFUSER PLENUM DIRECTLY TO BOTTOM OF DUCT.

2. 3/4" CONDENSATE DRAIN FROM IDF ROOM FCU, DOWN TO MOP SINK. TERMINATE 6-INCHES ABOVE SINK.

3. PROVIDE CONDENSATE PUMP; ROUTE PUMPED CONDENSATE LINE TO CUSTODIAL ROOM MOP SINK.

4. PERFORATED STAIR RISERS FROM FLOOR TO 5' AFF, TO ALLOW AIR TO RETURN TO OPEN RA DUCT UNDER STAIRS.

5. 36x84 RETURN AIR GRILLE. SEE ARCH DWGS.

PIVOT ARCHITECTURE

REGISTERED PROFESSIONAL ENGINEER 18329PE
NICHOLAS P. COLLINS, JR.
10-23-2014
EXPIRES 12-31-15

PAE
Portland | San Francisco | Seattle
pae-engineers.com

HOWARD RECONCILED SET
EUGENE SCHOOL DISTRICT
700 HOWARD AVE, EUGENE, OREGON 97404
HOWARD ELEMENTARY SCHOOL

SECTOR B MECHANICAL PLAN - FIRST FLOOR

PROJECT #	13.08
ISSUE DATE:	10/28/2014
DRAWN:	SMH
CHECKED:	NPC

REVISIONS

M113

PRINTED ON: 10/23/2014 3:29:37 PM FROM FILE: C:\Revit Local Files\13-1532_HES MEP\4\13-1532_HES MEP14_stacy.hansen.rvt

© 2014 PIVOT ARCHITECTURE

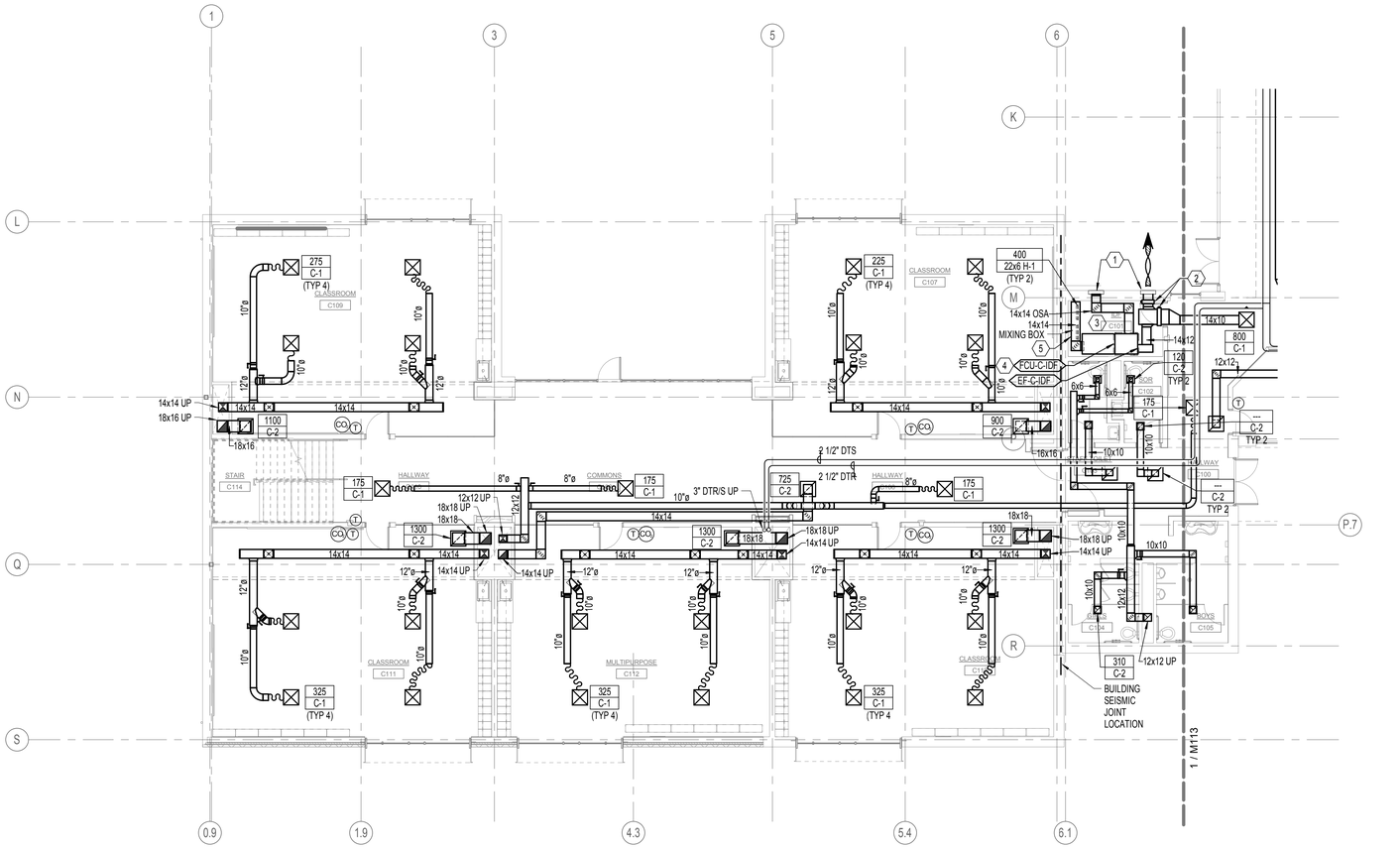

1 LEVEL 1 ENLARGED PLAN - SECTOR C - HVAC

1/8" = 1'-0"

GENERAL NOTES:

A. BRANCH RUNOUT PIPING TO TU HEATING COILS, CABINET UNIT HEATERS AND UNIT HEATER TO BE 3/4-INCH UNLESS OTHERWISE NOTED.

B. PROVIDE TRANSFER OPENINGS FOR RETURN AIR SIZED AT 300 FPM IN FULL HEIGHT WALLS SEE ARCHITECTURAL DRAWINGS.

C. PROVIDE VOLUME DAMPER AT EACH BRANCH OUTLET/INLET.

D. ALL WORK SHALL BE COORDINATED WITH ALL TRADES INVOLVED. OFFSETS IN PIPING AND DUCTS (INCLUDING DIVIDED DUCTS) AND TRANSITIONS AROUND OBSTRUCTIONS SHALL BE PROVIDED AT NO ADDITIONAL COST TO THE OWNER.

E. VERIFY ALL EQUIPMENT CONNECTIONS WITH MANUFACTURER'S CERTIFIED DRAWINGS. VERIFY AND PROVIDE DUCT TRANSITIONS TO FURNISHED EQUIPMENT. FIELD VERIFY AND COORDINATE ALL DIMENSIONS BEFORE FABRICATION.

F. REFER TO ARCHITECTURAL REFLECTED CEILING PLANS FOR EXACT LOCATIONS OF AIR DEVICES.

G. ALL DETAILS APPLY TO THIS SHEET WHETHER TAGGED OR NOT.

H. PIPING SHALL BE LARGEST SIZE SHOWN UNTIL SMALLER PIPE SIZE IS INDICATED INCLUDING MAINS AND BRANCH PIPING.

NOTES:

1. INTAKE AND EXHAUST LOUVERS FOR ECONOMIZER MODE, 2 SF EACH.

2. CONTROL DAMPER (TYP 2).

3. COORDINATE HVAC EQUIPMENT EQUIPMENT LAYOUT IN IDF ROOM WITH HOT AISLE/COLD AISLE SERVER ARRANGEMENT.

4. PROVIDE CONDENSATE PUMP. TERMINATE PUMPED CONDENSATE LINE AT MOP SINK IN CUSTODIAL ROOM ABOVE. ROUTE RS AND RL PIPING FROM FCU ABOVE HALLWAY CEILING AND UP TO CLOSEST AVAILABLE SHAFT TO ACCU-C-IDF IN MECHANICAL PLATFORM C300.

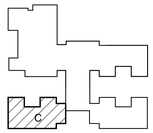

PIVOT ARCHITECTURE

REGISTERED PROFESSIONAL ENGINEER
"18329PE"
OREGON
NICHOLAS P. COLLINS JR.
10-23-2014
EXPIRES: 12-31-15

PAE
Portland | San Francisco | Seattle
pae-engineers.com

HOWARD RECONCILED SET
EUGENE SCHOOL DISTRICT
700 HOWARD AVE, EUGENE, OREGON 97404
HOWARD ELEMENTARY SCHOOL

SECTOR C MECHANICAL PLAN - FIRST FLOOR

PROJECT #	1306
ISSUE DATE:	10/28/2014
DRAWN:	SMR
CHECKED:	NPC

REVISIONS

M115

PRINTED ON: 10/23/2014 3:29:43 PM FROM FILE: C:\Revit Local Files\13-1532_HES MEP\13-1532_HES MEP14_stacy.hansen.rvt

© 2014 PIVOT ARCHITECTURE

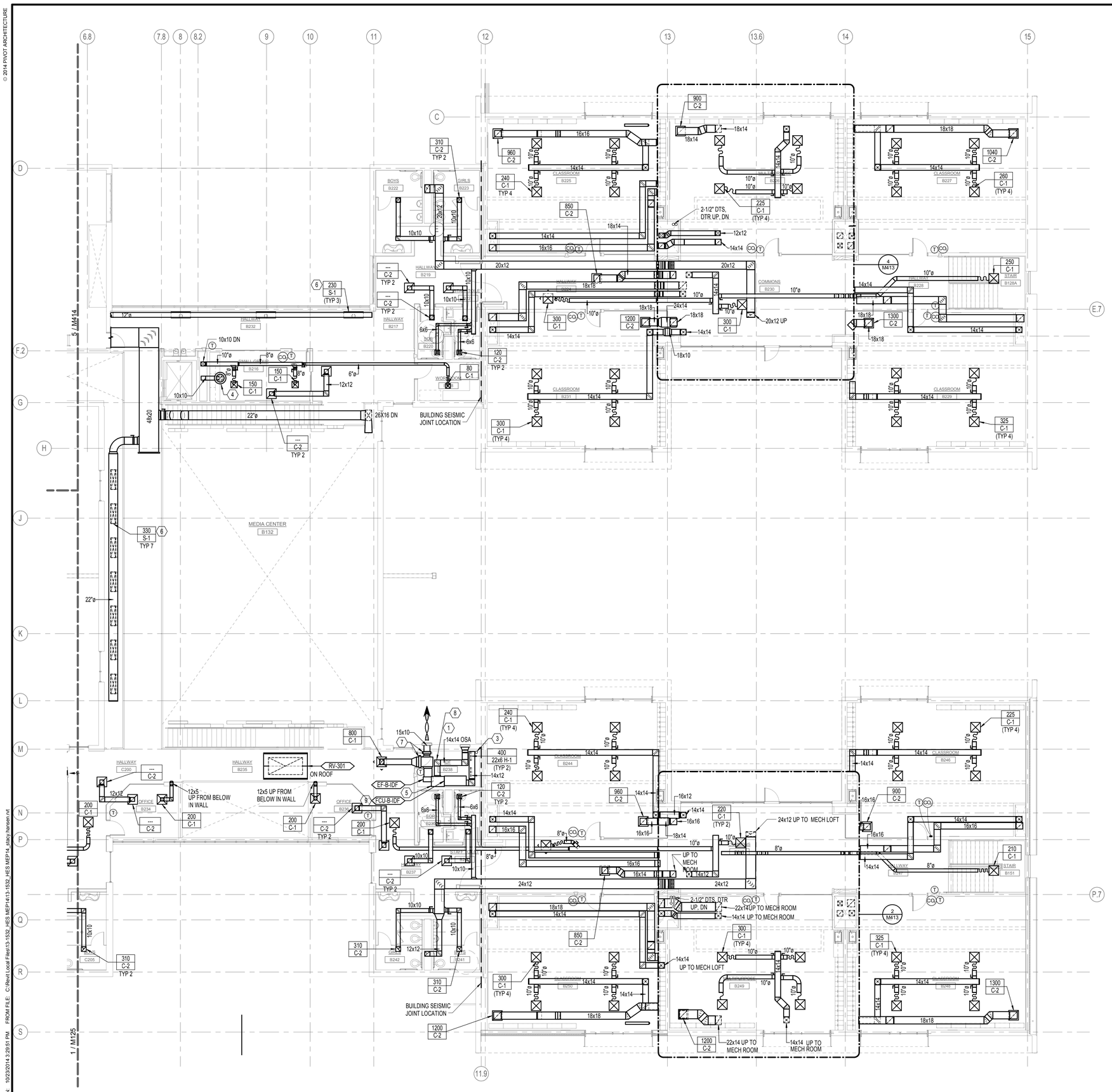

1 SECTOR B MECHANICAL PLAN - SECOND FLOOR

1/8" = 1'-0"

GENERAL NOTES:

A. BRANCH RUNOUT PIPING TO TU HEATING COILS, CABINET UNIT HEATERS AND UNIT HEATER TO BE 3/4-INCH UNLESS OTHERWISE NOTED.

B. PROVIDE TRANSFER OPENINGS FOR RETURN AIR SIZED AT 300 FPM IN FULL HEIGHT WALLS SEE ARCHITECTURAL DRAWINGS.

C. PROVIDE VOLUME DAMPER AT EACH BRANCH OUTLET/INLET.

D. ALL WORK SHALL BE COORDINATED WITH ALL TRADES INVOLVED. OFFSETS IN PIPING AND DUCTS (INCLUDING DIVIDED DUCTS) AND TRANSITIONS AROUND OBSTRUCTIONS SHALL BE PROVIDED AT NO ADDITIONAL COST TO THE OWNER.

E. VERIFY ALL EQUIPMENT CONNECTIONS WITH MANUFACTURER'S CERTIFIED DRAWINGS. VERIFY AND PROVIDE DUCT TRANSITIONS TO FURNISHED EQUIPMENT. FIELD VERIFY AND COORDINATE ALL DIMENSIONS BEFORE FABRICATION.

F. REFER TO ARCHITECTURAL REFLECTED CEILING PLANS FOR EXACT LOCATIONS OF AIR DEVICES.

G. ALL DETAILS APPLY TO THIS SHEET WHETHER TAGGED OR NOT.

H. PIPING SHALL BE LARGEST SIZE SHOWN UNTIL SMALLER PIPE SIZE IS INDICATED INCLUDING MAINS AND BRANCH PIPING.

NOTES:

1. INTAKE AND EXHAUST LOUVERS FOR ECONOMIZER MODE, 2 SF EACH.
2. 25' OF LINEAR SLOT DIFFUSERS AT BOTTOM OF DUCT.
3. 3/4" CONDENSATE DRAIN LINE DN TO MOP SINK IN CUSTODIAL ROOM ON 1ST FLOOR.
4. 10x10 EA DN AND UP TO EF-TLT ON ROOF.
5. MIXING BOX FURNISHED WITH FCU INCLUDES OSA AND RA DAMPERS. ACTUATION BY OWNER.
6. CONNECT DIFFUSER PLENUMM DIRECTLY TO BOTTOM OF DUCT.
7. CONTROL DAMPER (TYP 2).
8. COORDINATE HVAC EQUIPMENT EQUIPMENT LAYOUT IN IDF ROOM WITH HOT AISLE/COLD AISLE SERVER ARRANGEMENT.
9. ROUTE RS AND RL PIPING FROM FCU ABOVE HALLWAY CEILING AND UP TO CLOSEST AVAILABLE SHAFT TO ACCU-B-IDF IN MECHANICAL PLATFORM B301.

PIVOT ARCHITECTURE

REGISTERED PROFESSIONAL ENGINEER 18329PE OREGON NICHOLAS P. COLLINS JR. 10-23-2014 EXPIRES: 12-31-15

PAE
Portland | San Francisco | Seattle
pae-engineers.com

HOWARD RECONCILED SET
EUGENE SCHOOL DISTRICT
700 HOWARD AVE, EUGENE, OREGON 97404
HOWARD ELEMENTARY SCHOOL

SECTOR B MECHANICAL PLAN - SECOND FLOOR

PROJECT #	1336
ISSUE DATE:	10/28/2014
DRAWN:	SMH
CHECKED:	NPC
REVISIONS:	

M123

PRINTED ON: 10/23/2014 3:29:51 PM FROM FILE: C:\Revit Local Files\13-1532_HES MEP\413-1532_HES MEP14 stacy.hansen.rvt

© 2014 PIVOT ARCHITECTURE

GENERAL NOTES:

A. BRANCH RUNOUT PIPING TO TU HEATING COILS, CABINET UNIT HEATERS AND UNIT HEATER TO BE 3/4-INCH UNLESS OTHERWISE NOTED.

B. PROVIDE TRANSFER OPENINGS FOR RETURN AIR SIZED AT 300 FPM IN FULL HEIGHT WALLS SEE ARCHITECTURAL DRAWINGS.

C. PROVIDE VOLUME DAMPER AT EACH BRANCH OUTLET/INLET.

D. ALL WORK SHALL BE COORDINATED WITH ALL TRADES INVOLVED. OFFSETS IN PIPING AND DUCTS (INCLUDING DIVIDED DUCTS) AND TRANSITIONS AROUND OBSTRUCTIONS SHALL BE PROVIDED AT NO ADDITIONAL COST TO THE OWNER.

E. VERIFY ALL EQUIPMENT CONNECTIONS WITH MANUFACTURER'S CERTIFIED DRAWINGS. VERIFY AND PROVIDE DUCT TRANSITIONS TO FURNISHED EQUIPMENT. FIELD VERIFY AND COORDINATE ALL DIMENSIONS BEFORE FABRICATION.

F. REFER TO ARCHITECTURAL REFLECTED CEILING PLANS FOR EXACT LOCATIONS OF AIR DEVICES.

G. ALL DETAILS APPLY TO THIS SHEET WHETHER TAGGED OR NOT.

H. PIPING SHALL BE LARGEST SIZE SHOWN UNTIL SMALLER PIPE SIZE IS INDICATED INCLUDING MAINS AND BRANCH PIPING.

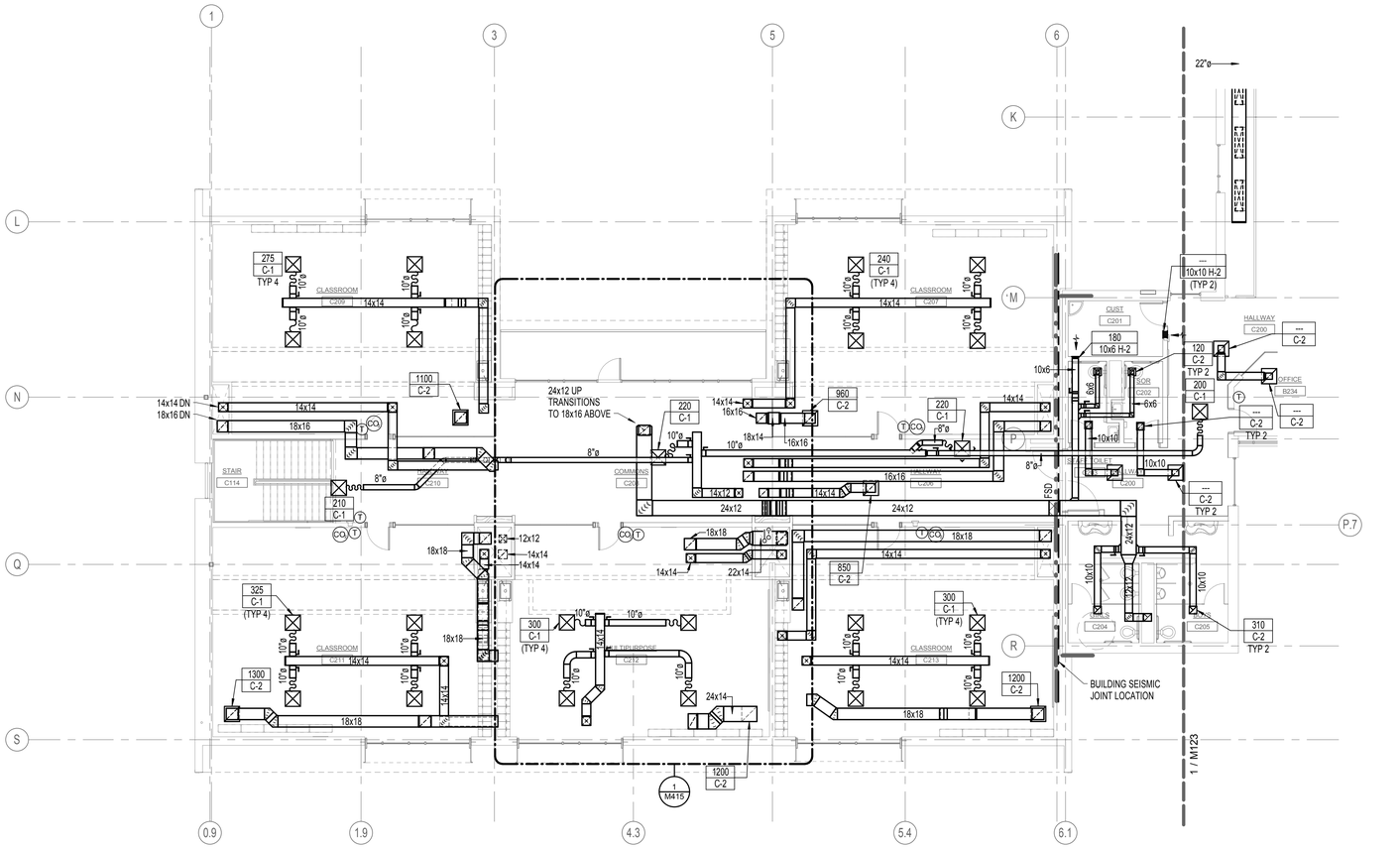

1 SECTOR C MECHANICAL PLAN - SECOND FLOOR
1/8" = 1'-0"

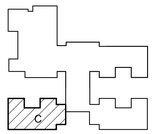

PIVOT ARCHITECTURE

REGISTERED PROFESSIONAL ENGINEER 18329PE NICHOLAS P. COLLINS JR. 10-23-2014 EXPIRES: 12-31-15

PAE
Portland | San Francisco | Seattle
pae-engineers.com

HOWARD RECONCILED SET
EUGENE SCHOOL DISTRICT
700 HOWARD AVE, EUGENE, OREGON 97404
HOWARD ELEMENTARY SCHOOL

SECTOR C MECHANICAL PLAN - SECOND FLOOR

PROJECT #:	1336
ISSUE DATE:	10/28/2014
DRAWN:	SMH
CHECKED:	NPC

REVISIONS

M125

PRINTED ON: 10/23/2014 4:44:17 PM FROM FILE: C:\Revit Local Files\13-1532_HES MEP14\13-1532_HES MEP14_stacy.hansen.rvt

© 2014 PIVOT ARCHITECTURE

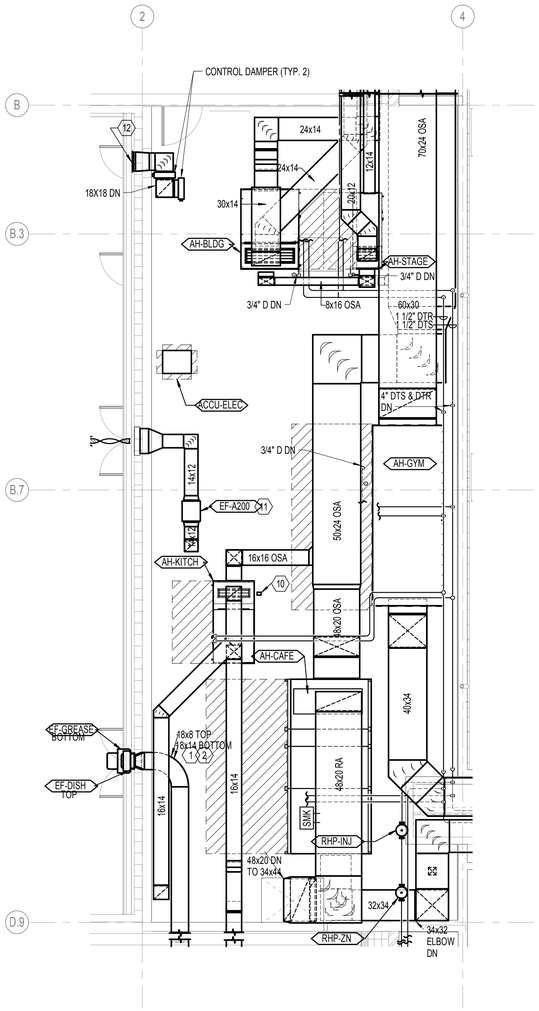

3 SECTOR A MECHANICAL EQUIPMENT PLATFORM A200 - HVAC
3/16" = 1'-0"

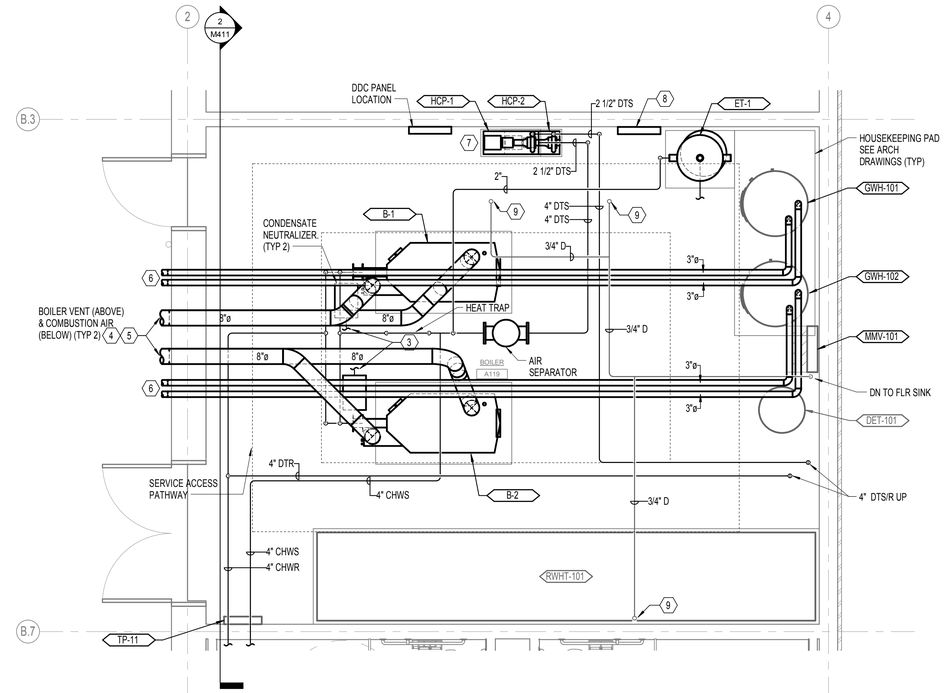

1 SECTOR A PARTIAL MECHANICAL PLAN - BOILER ROOM
3/8" = 1'-0"

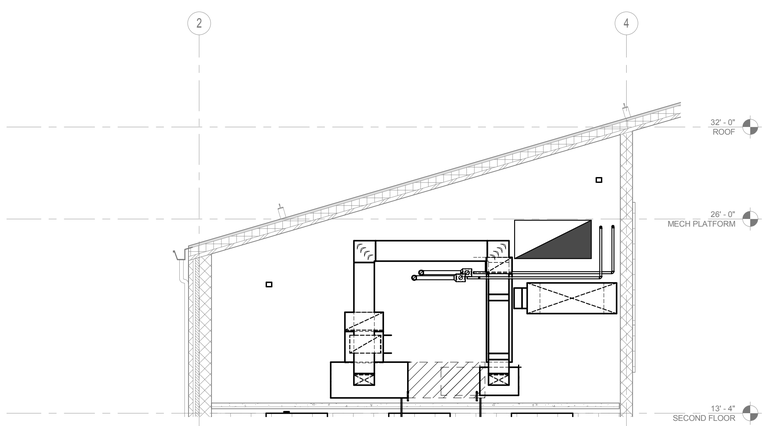

4 SECTOR A PARTIAL MECHANICAL PLAN - MECHANICAL PLATFORM
1/4" = 1'-0"

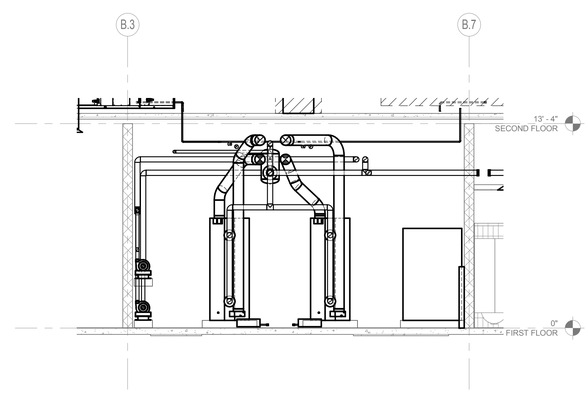

2 MECHANICAL ROOM SECTION 1
1/4" = 1'-0"

GENERAL NOTES:

A. BRANCH RUNOUT PIPING TO TU HEATING COILS, CABINET UNIT HEATERS AND UNIT HEATER TO BE 3/4-INCH UNLESS OTHERWISE NOTED.

B. PROVIDE TRANSFER OPENINGS FOR RETURN AIR SIZED AT 300 FPM IN FULL HEIGHT WALLS SEE ARCHITECTURAL DRAWINGS.

C. PROVIDE VOLUME DAMPER AT EACH BRANCH OUTLET/INLET.

D. ALL WORK SHALL BE COORDINATED WITH ALL TRADES INVOLVED. OFFSETS IN PIPING AND DUCTS (INCLUDING DIVIDED DUCTS) AND TRANSITIONS AROUND OBSTRUCTIONS SHALL BE PROVIDED AT NO ADDITIONAL COST TO THE OWNER.

E. VERIFY ALL EQUIPMENT CONNECTIONS WITH MANUFACTURER'S CERTIFIED DRAWINGS. VERIFY AND PROVIDE DUCT TRANSITIONS TO FURNISHED EQUIPMENT. FIELD VERIFY AND COORDINATE ALL DIMENSIONS BEFORE FABRICATION.

F. REFER TO ARCHITECTURAL REFLECTED CEILING PLANS FOR EXACT LOCATIONS OF AIR DEVICES.

G. ALL DETAILS APPLY TO THIS SHEET WHETHER TAGGED OR NOT.

H. PIPING SHALL BE LARGEST SIZE SHOWN UNTIL SMALLER PIPE SIZE IS INDICATED INCLUDING MAINS AND BRANCH PIPING.

NOTES:

1. PROVIDE GREASE DUCT CLEAN OUT AT A MINIMUM OF 20 FT INTERVALS BETWEEN FAN AND HOOD.
2. SLOPE GREASE DUCT BACK TOWARD HOOD 1/4" FOR EVERY 12" OF RUN.
3. ROUTE TO FLOOR SINK.
4. BOILER VENT TERMINATION TO HAVE 30 DEGREE ELBOW DOWN WITH BIRD SCREEN. TERMINATE AT 12' A.F.F. PROVIDE MIN. 12" HORIZONTAL SEPARATION BETWEEN ADJACENT VENTS. MAINTAIN MAX POSSIBLE HORIZONTAL DISTANCE FROM DOORS. SLOPE BACK TO BOILER AT MIN 1/4" PER FOOT.
5. BOILER COMBUSTION AIR OPENING WITH WEATHER HOOD AND SCREEN. INSTALL 36" DIRECTLY BENEATH CORRESPONDING BOILER VENT TERMINATION.
6. WATER HEATER SIDEWALL TERMINATION KIT WITH SIDE BY SIDE VENT AND COMBUSTION AIR CONNECTIONS. MAINTAIN MIN 12" DISTANCE FROM BOILER VENT TERMINATION. MOUNT AT 12' AFF.
7. PROVIDE STEEL SUPPORT RACK FOR UPPER PUMP. RACK TO INCLUDE CONCRETE INERTIA BASE.
8. BACKFLOW PREVENTER (SEE PLUMBING DWGS) AND PRV. SEE 11/M501.
9. 3/4" CONDENSATE DRAIN UP TO MECH PLATFORM.
10. TERMINATE CONDENSATE DRAIN AT FLOOR SINK. SEE PLUMBING DWGS.
11. MOUNT FAN ON PLATFORM CONSTRUCTED OF STEEL OR WOOD, 36" ABOVE FLOOR.
12. 30X24 RELIEF PLENUM AT LOUVER.

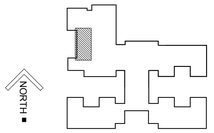

PIVOT ARCHITECTURE

REGISTERED PROFESSIONAL ENGINEER 18329PE OREGON JONATHAN P. COLLINGS
10-23-2014
EXPIRES 12-31-15

PAE
Portland | San Francisco | Seattle
pae-engineers.com

HOWARD RECONCILED SET
EUGENE SCHOOL DISTRICT
700 HOWARD AVE, EUGENE, OREGON 97404
HOWARD ELEMENTARY SCHOOL

SECTOR A PARTIAL MECHANICAL PLAN

PROJECT #:	1336
ISSUE DATE:	10/28/2014
DRAWN:	SMH
CHECKED:	NPC
REVISIONS:	

M411

PRINTED ON: 10/23/2014 3:30:04 PM FROM FILE: C:\Revit Local Files\13-1532_HES MEP14\13-1532_HES MEP14_stacy.hansen.rvt

© 2014 PIVOT ARCHITECTURE

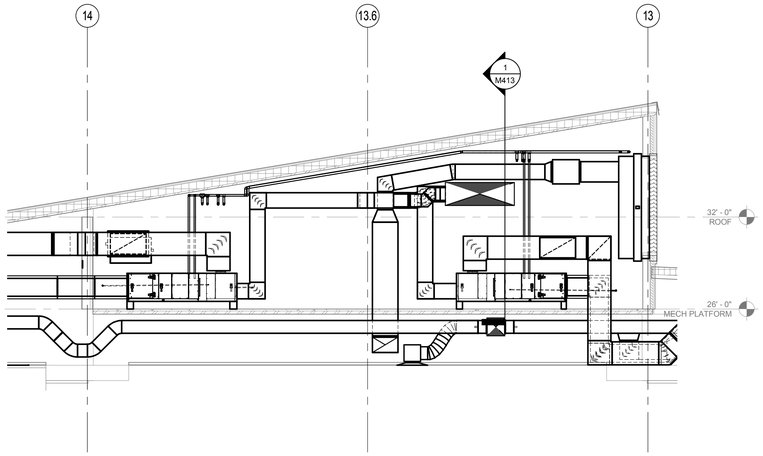

3 MECH PLATFORM B300 SECTION VIEW SOUTH
1/4" = 1'-0"

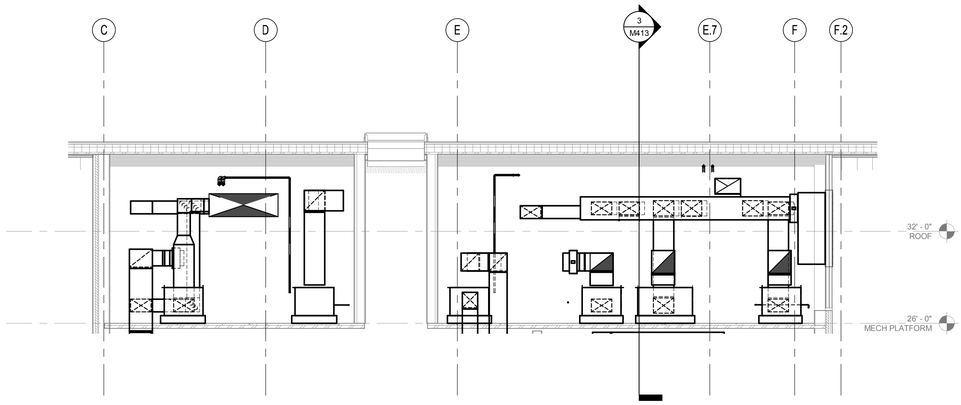

1 MECH PLATFORM B300 VIEW EAST
1/4" = 1'-0"

GENERAL NOTES:

A. BRANCH RUNOUT PIPING TO TU HEATING COILS, CABINET UNIT HEATERS AND UNIT HEATER TO BE 3/4-INCH UNLESS OTHERWISE NOTED.

B. PROVIDE TRANSFER OPENINGS FOR RETURN AIR SIZED AT 300 FPM IN FULL HEIGHT WALLS SEE ARCHITECTURAL DRAWINGS.

C. PROVIDE VOLUME DAMPER AT EACH BRANCH OUTLET/INLET.

D. ALL WORK SHALL BE COORDINATED WITH ALL TRADES INVOLVED. OFFSETS IN PIPING AND DUCTS (INCLUDING DIVIDED DUCTS) AND TRANSITIONS AROUND OBSTRUCTIONS SHALL BE PROVIDED AT NO ADDITIONAL COST TO THE OWNER.

E. VERIFY ALL EQUIPMENT CONNECTIONS WITH MANUFACTURER'S CERTIFIED DRAWINGS. VERIFY AND PROVIDE DUCT TRANSITIONS TO FURNISHED EQUIPMENT. FIELD VERIFY AND COORDINATE ALL DIMENSIONS BEFORE FABRICATION.

F. REFER TO ARCHITECTURAL REFLECTED CEILING PLANS FOR EXACT LOCATIONS OF AIR DEVICES.

G. ALL DETAILS APPLY TO THIS SHEET WHETHER TAGGED OR NOT.

H. PIPING SHALL BE LARGEST SIZE SHOWN UNTIL SMALLER PIPE SIZE IS INDICATED INCLUDING MAINS AND BRANCH PIPING.

NOTES:

1. 2" END OF LINE BYPASS.

2. TERMINATE CONDENSATE DRAIN AT FLOOR SINK. SEE PLUMBING DWGS.

3. SERVICE ACCESS PATHWAY TO MECHANICAL EQUIPMENT TO THAT DEPICTED IN ROOM C300.

4. PROVIDE SEPARATE 68X24 EAD ABOVE AND 92X56 EAD BELOW. RELIEF PLENUMS TO BE SEPARATED FROM RESTROOM EXHAUST PLENUM.

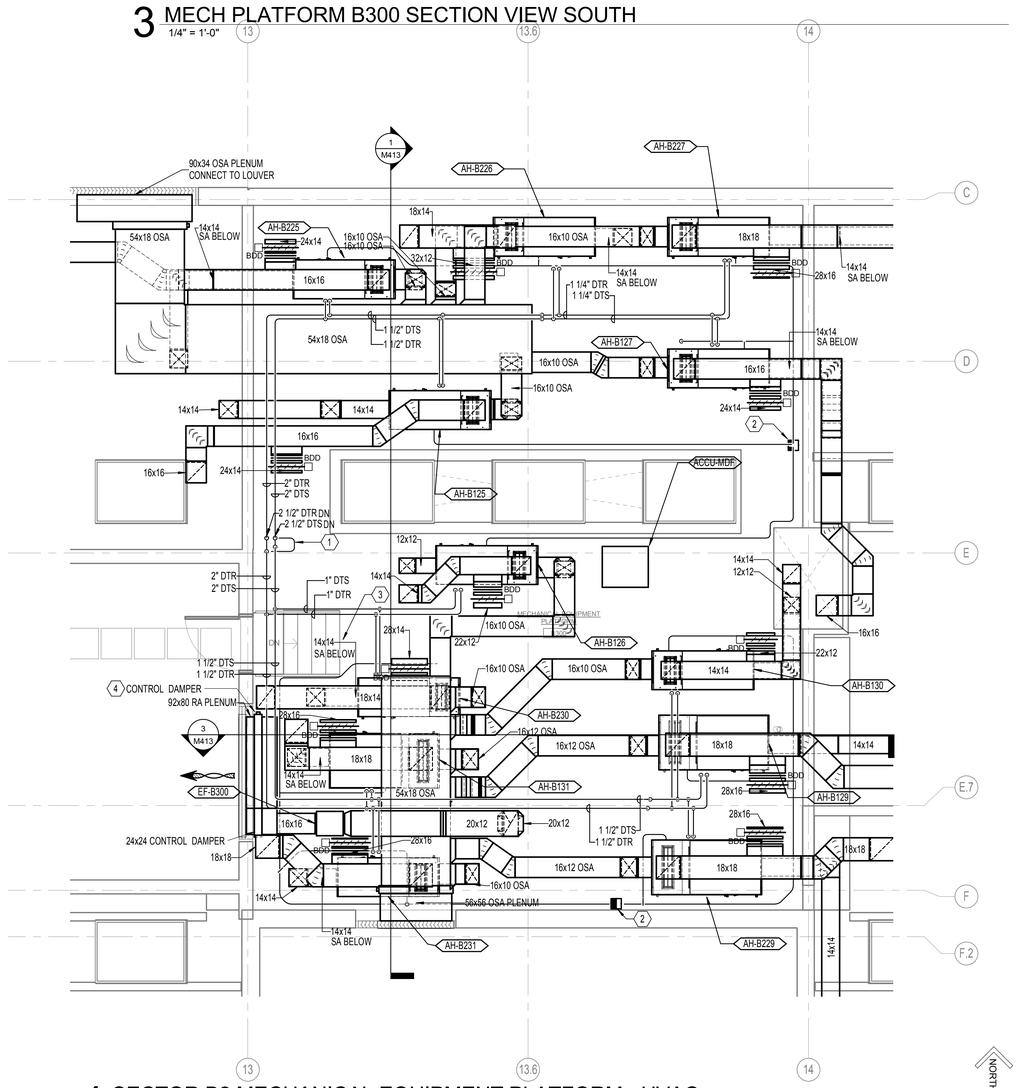

4 SECTOR B2 MECHANICAL EQUIPMENT PLATFORM - HVAC
1/4" = 1'-0"

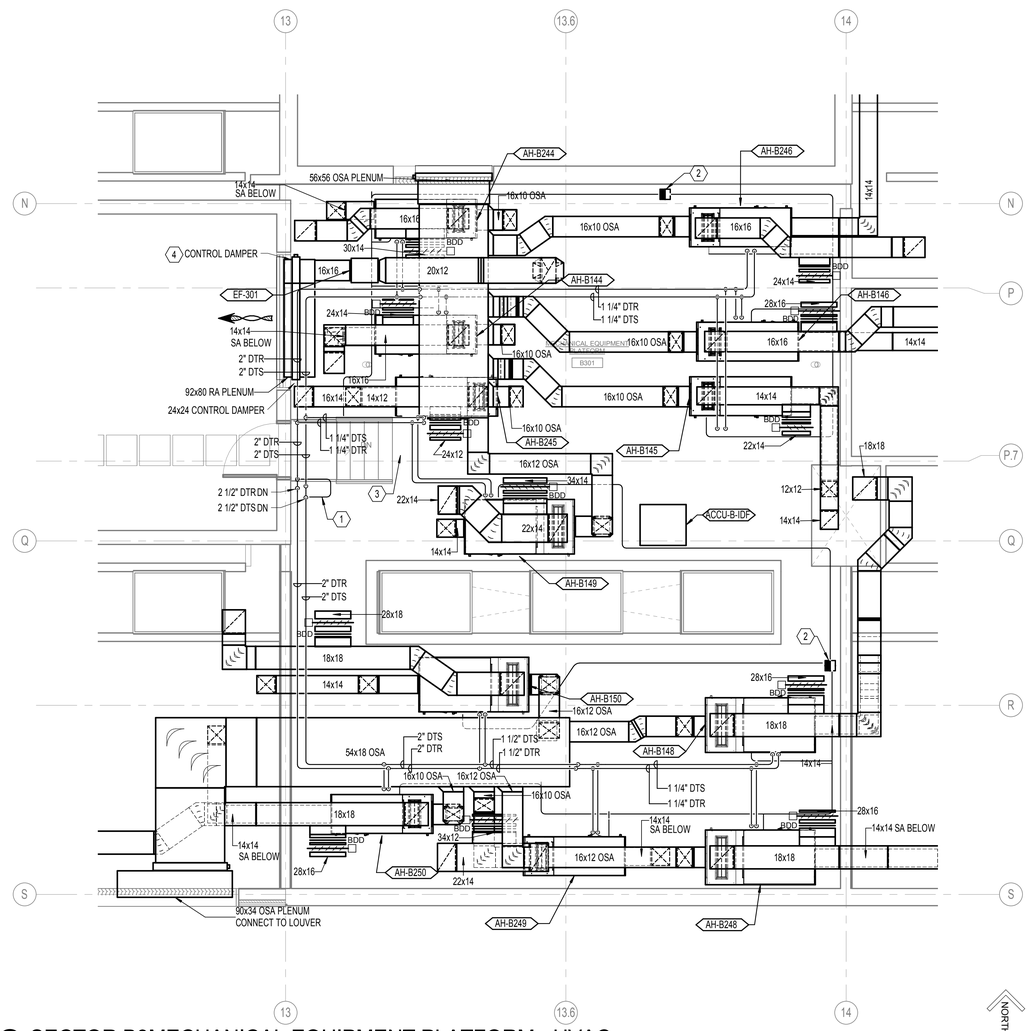

2 SECTOR B3MECHANICAL EQUIPMENT PLATFORM - HVAC
1/4" = 1'-0"

NORTH

PIVOT ARCHITECTURE

REGISTERED PROFESSIONAL ENGINEER 18329PE
OREGON
NICHOLAS P. COLLINS JR.
10-23-2014
EXPIRES 12-31-15

PAE
Portland | San Francisco | Seattle
pae-engineers.com

HOWARD RECONCILED SET
EUGENE SCHOOL DISTRICT
700 HOWARD AVE, EUGENE, OREGON 97404
HOWARD ELEMENTARY SCHOOL

SECTOR B PARTIAL MECHANICAL PLAN

PROJECT #	1306
ISSUE DATE:	10/28/2014
DRAWN:	SMR
CHECKED:	NPC

REVISIONS

M413

PRINTED ON: 10/23/2014 3:30:15 PM FROM FILE: C:\Revit Local Files\13-1532_HES MEP\4413-1532_HES MEP14_stacy.hansen.rvt

© 2014 PIVOT ARCHITECTURE

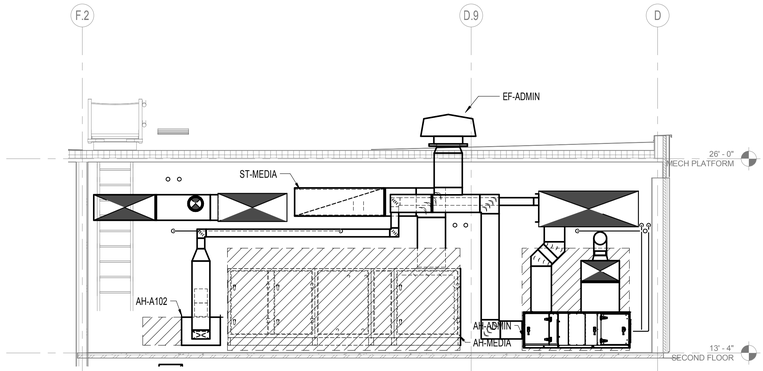

1 MECH PLATFORM SECTION VIEW WEST
1/4" = 1'-0"

GENERAL NOTES:

A. BRANCH RUNOUT PIPING TO TU HEATING COILS, CABINET UNIT HEATERS AND UNIT HEATER TO BE 3/4-INCH UNLESS OTHERWISE NOTED.

B. PROVIDE TRANSFER OPENINGS FOR RETURN AIR SIZED AT 300 FPM IN FULL HEIGHT WALLS SEE ARCHITECTURAL DRAWINGS.

C. PROVIDE VOLUME DAMPER AT EACH BRANCH OUTLET/INLET.

D. ALL WORK SHALL BE COORDINATED WITH ALL TRADES INVOLVED. OFFSETS IN PIPING AND DUCTS (INCLUDING DIVIDED DUCTS) AND TRANSITIONS AROUND OBSTRUCTIONS SHALL BE PROVIDED AT NO ADDITIONAL COST TO THE OWNER.

E. VERIFY ALL EQUIPMENT CONNECTIONS WITH MANUFACTURER'S CERTIFIED DRAWINGS. VERIFY AND PROVIDE DUCT TRANSITIONS TO FURNISHED EQUIPMENT. FIELD VERIFY AND COORDINATE ALL DIMENSIONS BEFORE FABRICATION.

F. REFER TO ARCHITECTURAL REFLECTED CEILING PLANS FOR EXACT LOCATIONS OF AIR DEVICES.

G. ALL DETAILS APPLY TO THIS SHEET WHETHER TAGGED OR NOT.

H. PIPING SHALL BE LARGEST SIZE SHOWN UNTIL SMALLER PIPE SIZE IS INDICATED INCLUDING MAINS AND BRANCH PIPING.

NOTE:

1. UP TO ROOF, RELIEF FAN, EF-ADMIN.

2. TERMINATE CONDENSATE DRAIN AT FLOOR SINK. SEE PLUMBING DWGS.

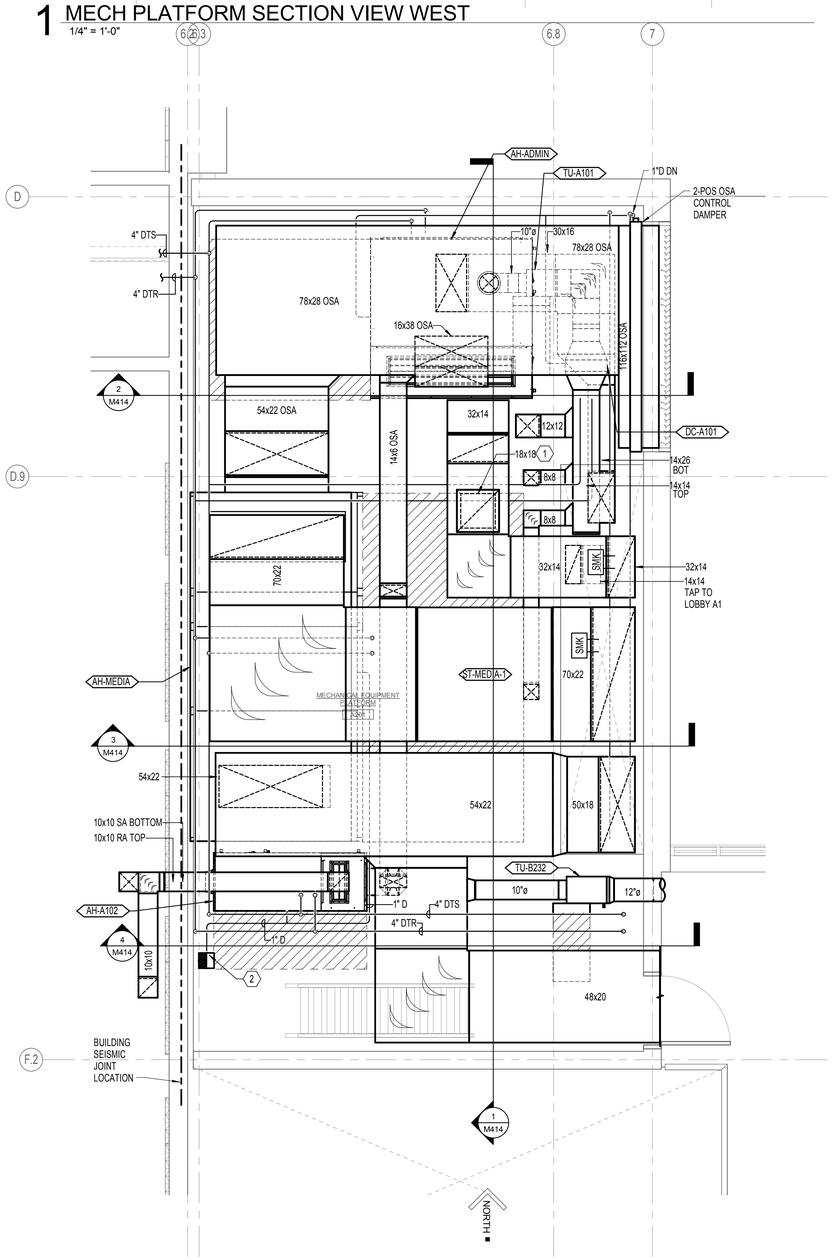

5 SECTOR B MECHANICAL EQUIPMENT PLATFORM A201 - HVAC
3/8" = 1'-0"

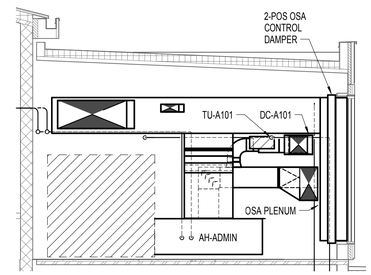

2 MECH PLATFORM NORTH SECTION VIEW NORTH
1/4" = 1'-0"

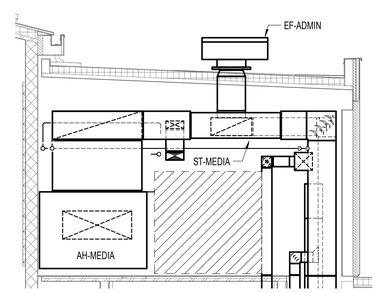

3 MECH PLATFORM MIDDLE SECTION VIEW NORTH
1/4" = 1'-0"

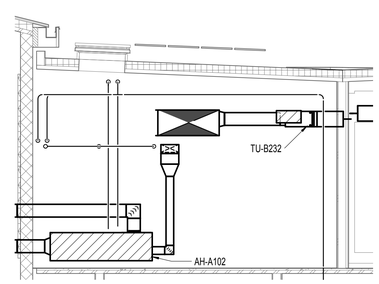

4 MECHANICAL PLATFORM SOUTH SECTION VIEW NORTH
1/4" = 1'-0"

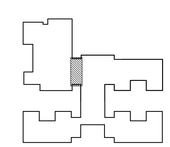

PIVOT ARCHITECTURE

REGISTERED PROFESSIONAL ENGINEER 18329PE
ANDREAS P. COLLINS JR.
10-23-2014
EXPIRES 12-31-15

PAE
Portland | San Francisco | Seattle
pae-engineers.com

HOWARD RECONCILED SET
EUGENE SCHOOL DISTRICT
700 HOWARD AVE, EUGENE, OREGON 97404
HOWARD ELEMENTARY SCHOOL

SECTOR B PARTIAL MECHANICAL PLAN

PROJECT #	1130
ISSUE DATE:	10/28/2014
DRAWN:	SMH
CHECKED:	NPC

REVISIONS

M414

PRINTED ON: 10/23/2014 3:30:24 PM FROM FILE: C:\Revit Local Files\13-1532_HES MEP14\13-1532_HES MEP14_alacy.hansen.rvt

© 2014 PIVOT ARCHITECTURE

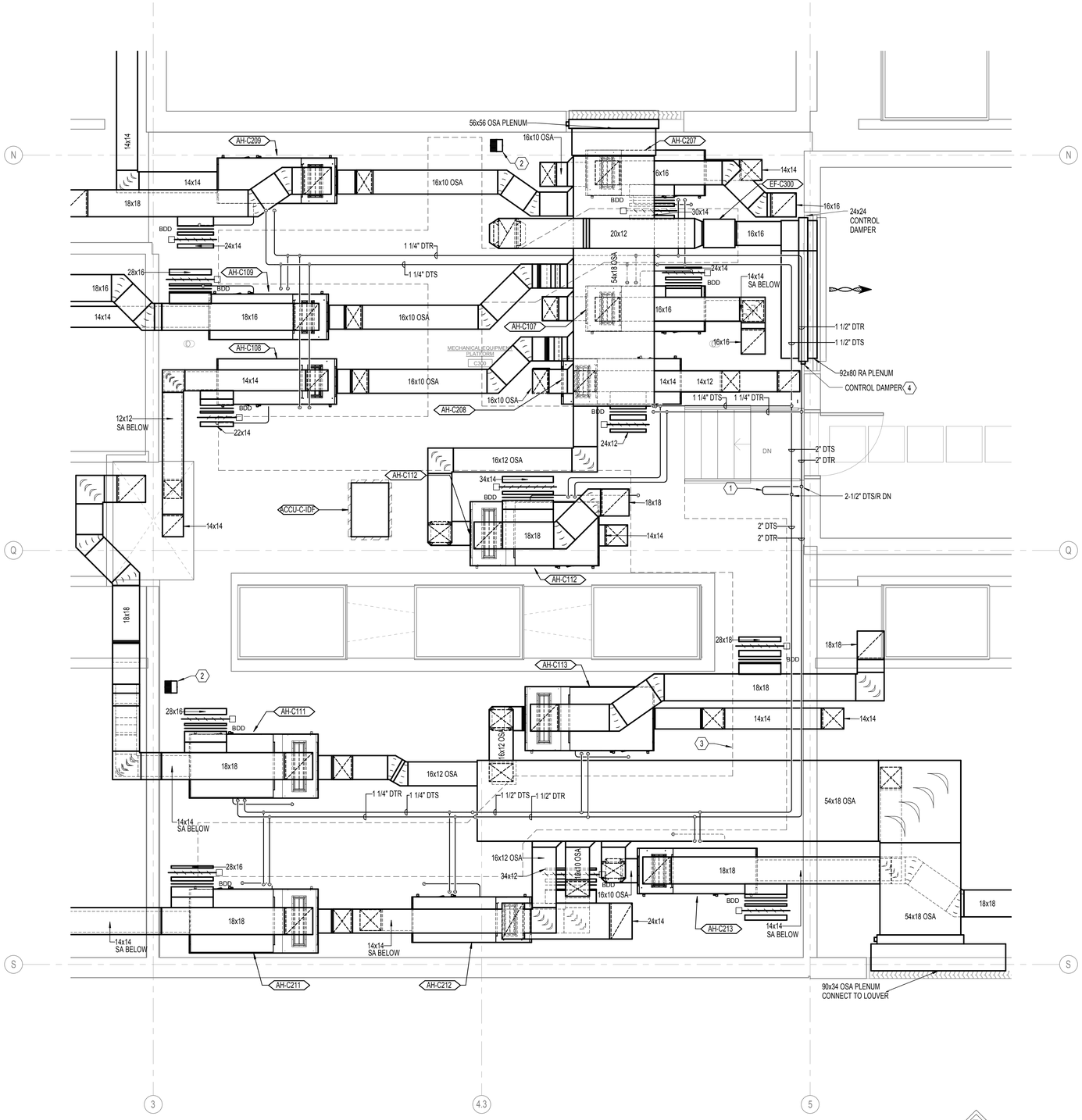

1 SECTOR C MECHANICAL EQUIPMENT PLATFORM - HVAC
3/8" = 1'-0"

GENERAL NOTES:

A. BRANCH RUNOUT PIPING TO TU HEATING COILS, CABINET UNIT HEATERS AND UNIT HEATER TO BE 3/4-INCH UNLESS OTHERWISE NOTED.

B. PROVIDE TRANSFER OPENINGS FOR RETURN AIR SIZED AT 300 FPM IN FULL HEIGHT WALLS SEE ARCHITECTURAL DRAWINGS.

C. PROVIDE VOLUME DAMPER AT EACH BRANCH OUTLET/INLET.

D. ALL WORK SHALL BE COORDINATED WITH ALL TRADES INVOLVED. OFFSETS IN PIPING AND DUCTS (INCLUDING DIVIDED DUCTS) AND TRANSITIONS AROUND OBSTRUCTIONS SHALL BE PROVIDED AT NO ADDITIONAL COST TO THE OWNER.

E. VERIFY ALL EQUIPMENT CONNECTIONS WITH MANUFACTURER'S CERTIFIED DRAWINGS. VERIFY AND PROVIDE DUCT TRANSITIONS TO FURNISHED EQUIPMENT. FIELD VERIFY AND COORDINATE ALL DIMENSIONS BEFORE FABRICATION.

F. REFER TO ARCHITECTURAL REFLECTED CEILING PLANS FOR EXACT LOCATIONS OF AIR DEVICES.

G. ALL DETAILS APPLY TO THIS SHEET WHETHER TAGGED OR NOT.

H. PIPING SHALL BE LARGEST SIZE SHOWN UNTIL SMALLER PIPE SIZE IS INDICATED INCLUDING MAINS AND BRANCH PIPING.

NOTES:

1. 2" END OF LINE BYPASS.
2. TERMINATE CONDENSATE DRAIN AT FLOOR SINK. SEE PLUMBING DWGS.
3. SERVICE ACCESS PATHWAY TO MECHANICAL EQUIPMENT, 3' WIDE BY 6'8" HIGH.
4. PROVIDE SEPARATE 68x24 EAD ABOVE AND 92x56 EAD BELOW. RELIEF PLENUMS TO BE SEPARATED FROM RESTROOM EXHAUST PLENUM.

PIVOT ARCHITECTURE

REGISTERED PROFESSIONAL ENGINEER 18329PE
NICHOLAS P. COLLINS JR.
10-23-2014
EXPIRES: 12-31-15

PAE
Portland | San Francisco | Seattle
pae-engineers.com

HOWARD RECONCILED SET
EUGENE SCHOOL DISTRICT
700 HOWARD AVE, EUGENE, OREGON 97404
HOWARD ELEMENTARY SCHOOL
SECTOR C PARTIAL MECHANICAL PLAN

PROJECT #	1330
ISSUE DATE:	10/28/2014
DRAWN:	SMH
CHECKED:	NPC

REVISIONS

M415

PRINTED ON: 10/23/2014 3:30:30 PM FROM FILE: C:\Revit Local Files\13-1532_HES MEP14\13-1532_HES MEP14_alacy.hansen.rvt

© 2014 PIVOT ARCHITECTURE

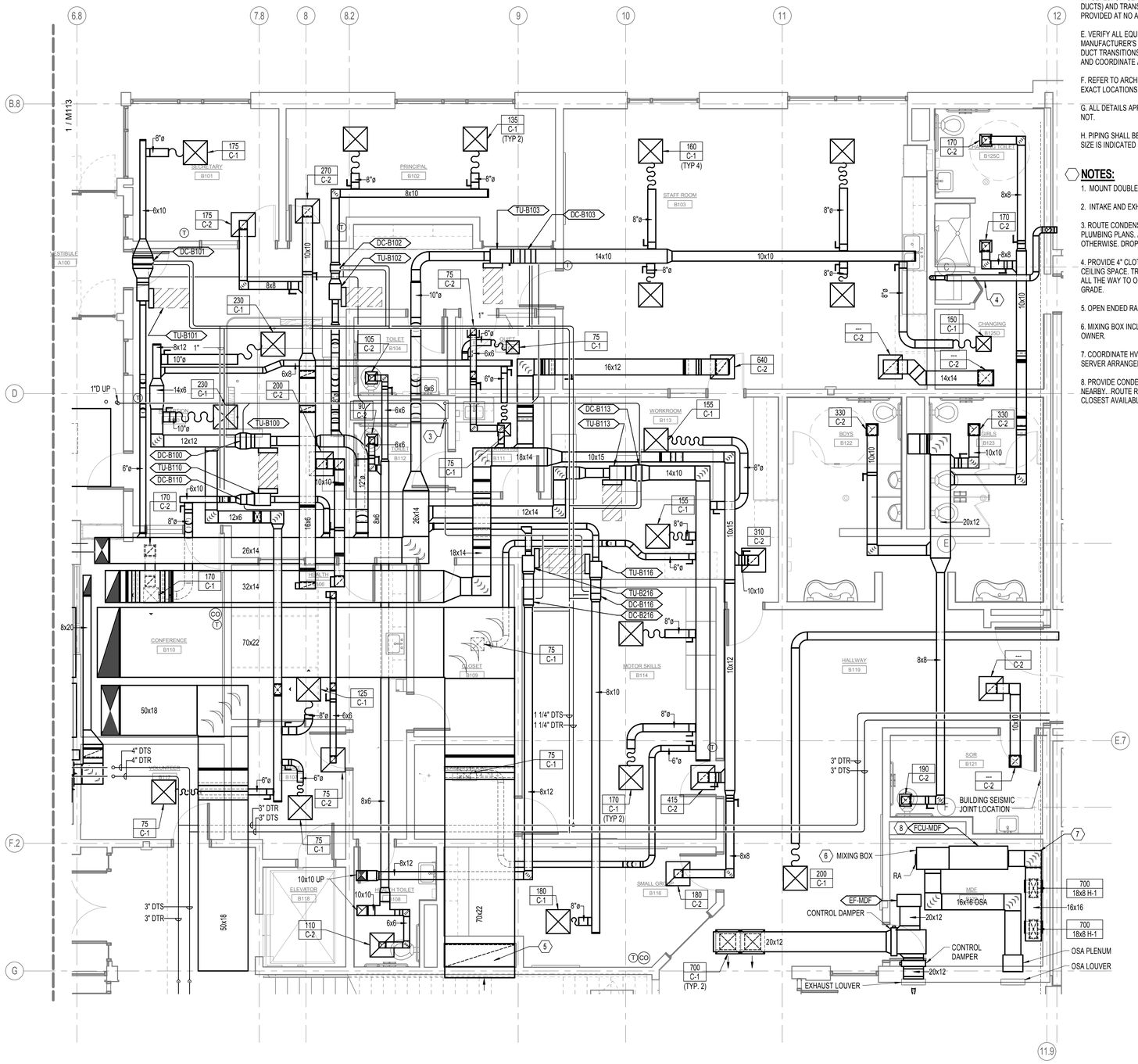

1 SECTOR B MECHANICAL PLAN - FIRST FLOOR

1/4" = 1'-0"

GENERAL NOTES:

A. BRANCH RUNOUT PIPING TO TU HEATING COILS, CABINET UNIT HEATERS AND UNIT HEATER TO BE 3/4-INCH UNLESS OTHERWISE NOTED.

B. PROVIDE TRANSFER OPENINGS FOR RETURN AIR SIZED AT 300 FPM IN FULL HEIGHT WALLS SEE ARCHITECTURAL DRAWINGS.

C. PROVIDE VOLUME DAMPER AT EACH BRANCH OUTLET/INLET.

D. ALL WORK SHALL BE COORDINATED WITH ALL TRADES INVOLVED. OFFSETS IN PIPING AND DUCTS (INCLUDING DIVIDED DUCTS) AND TRANSITIONS AROUND OBSTRUCTIONS SHALL BE PROVIDED AT NO ADDITIONAL COST TO THE OWNER.

E. VERIFY ALL EQUIPMENT CONNECTIONS WITH MANUFACTURER'S CERTIFIED DRAWINGS. VERIFY AND PROVIDE DUCT TRANSITIONS TO FURNISHED EQUIPMENT. FIELD VERIFY AND COORDINATE ALL DIMENSIONS BEFORE FABRICATION.

F. REFER TO ARCHITECTURAL REFLECTED CEILING PLANS FOR EXACT LOCATIONS OF AIR DEVICES.

G. ALL DETAILS APPLY TO THIS SHEET WHETHER TAGGED OR NOT.

H. PIPING SHALL BE LARGEST SIZE SHOWN UNTIL SMALLER PIPE SIZE IS INDICATED INCLUDING MAINS AND BRANCH PIPING.

NOTES:

1. MOUNT DOUBLE DEFLECTION GRILLE ON BOTTOM OF DUCT.
2. INTAKE AND EXHAUST LOUVERS FOR ECONOMIZER MODE, 2 SQ FT EACH.
3. ROUTE CONDENSATE DRAIN LINES FROM DUCT COILS DN TO FLOOR SINK. SEE PLUMBING PLANS. ALL HORIZONTAL DRAIN LINES TO BE 3/4" UNLESS NOTED OTHERWISE. DROP TO FLOOR SINK TO BE 1".
4. PROVIDE 4" CLOTHES DRYER DUCT FROM DRYER CONNECTOR UP IN WALL TO CEILING SPACE. TRANSITION TO 6" ABOVE CEILING. REMAINDER OF DUCT SHALL BE 6" ALL THE WAY TO OUTLET AT EXTERIOR WALL. MOUNT OUTLET AT 18 INCHES ABOVE GRADE.
5. OPEN ENDED RA DUCT AT FLOOR LEVEL, UNDER STAIRS.
6. MIXING BOX INCLUDES RETURN AIR AND OUTSIDE AIR DAMPERS. ACTUATION BY OWNER.
7. COORDINATE HVAC EQUIPMENT LAYOUT IN MDF ROOM WITH HOT AISLE/COLD AISLE SERVER ARRANGEMENT. TYP FOR IDF ROOMS.
8. PROVIDE CONDENSATE PUMP. CONNECT TO OTHER GRAVITY CONDENSATE LINES NEARBY... ROUTE RS AND RL PIPING FROM FCU ABOVE HALLWAY CEILING AND UP TO CLOSEST AVAILABLE SHAFT TO ACCU-MDF IN MECHANICAL PLATFORM B300.

NORTH

PIVOT ARCHITECTURE

REGISTERED PROFESSIONAL ENGINEER 18329PE OREGON NICHOLAS P. COLLINS JR. 10-23-2014 EXPIRES: 12-31-15

PAE
Portland | San Francisco | Seattle
pae-engineers.com

HOWARD RECONCILED SET
EUGENE SCHOOL DISTRICT
700 HOWARD AVE, EUGENE, OREGON 97404
HOWARD ELEMENTARY SCHOOL

PARTIAL PLANS - MECHANICAL

PROJECT #	1306
ISSUE DATE:	10/28/2014
DRAWN:	SMR
CHECKED:	NPC

REVISIONS

M416

PRINTED ON: 10/23/2014 3:30:36 PM FROM FILE: C:\Revit Local Files\13-1532_HES MEP\13-1532_HES MEP14_stacy.hansen.rvt

© 2014 PIVOT ARCHITECTURE

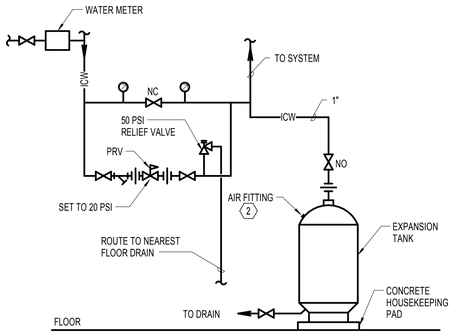

NOTES:
1. SEE SPECIFICATIONS FOR SEISMIC RESTRAINT REQUIREMENTS.
2. PRE-PRESSURIZE TO 20 PSI BEFORE OPENING TO SYSTEM.

11 EXPANSION TANK CONNECTION
NONE

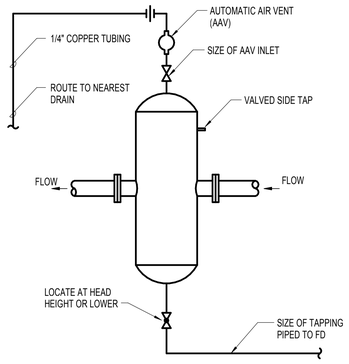

7 AIR/DIRT SEPARATOR - HIGH EFFICIENCY COALESCING
NONE

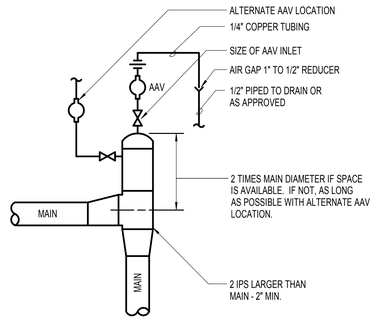

4 AUTOMATIC AIR VENT
NONE

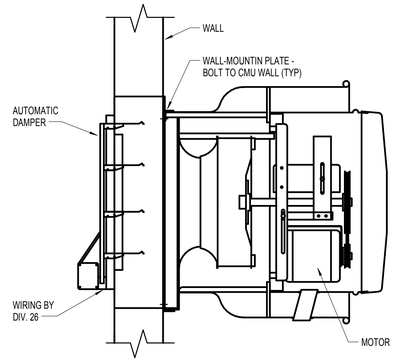

GENERAL NOTE:
1. SEE SPECIFICATIONS FOR VIBRATION ISOLATION AND SEISMIC RESTRAINT.

1 DISHWASH EXHAUST FAN
NONE

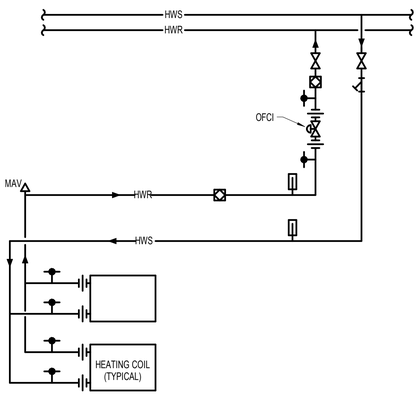

NOTES:
1. OFFSET PIPING AT COIL ENDS TO ALLOW REMOVAL OF COILS.
2. THREE OR MORE COILS PIPED SIMILAR.

GENERAL NOTE:
1. TYPICAL FOR GYM, CAFE, AND MEDIA CENTER ONLY. SEE 5/M502 FOR OTHER LOCATIONS.

12 AHU HEATING COIL PIPING
NONE

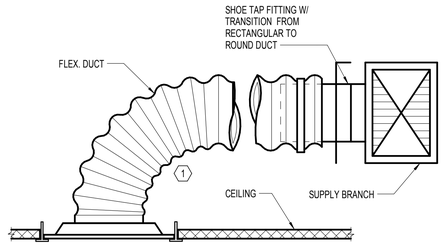

NOTES:
1. 1.5 DIA. MINIMUM FLEX DUCT RADIUS (4" MAX LENGTH). WHERE 1.5 DIA. TURN CAN NOT BE MET USE DETAIL 9/M501

8 TYPICAL ROUND NECK T-BAR DIFFUSER
NONE

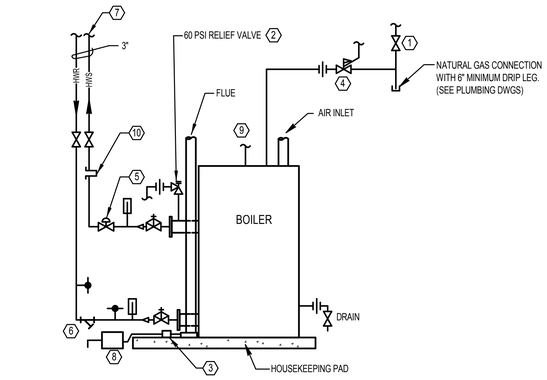

NOTES:
1. GAS COCK
2. ROUTE RELIEF PIPING TO WITHIN 6 INCHES OF FLOOR.
3. CONNECT TRAP TO BOILER WITH TUBING FURNISHED WITH BOILER.
4. PRESSURE REGULATOR. VENT TO OUTDOORS. SIZE OF VENT BY BOILER SUPPLIER. MIN 10 FEET TO BOILER CONNECTION.
5. MOTORIZED AUTOMATIC ISOLATION VALVE, FURNISHED WITH BOILER.
6. PROVIDE STAINLESS STEEL 30 MESH SCREEN.
7. PIPE ALL BOILERS IN IDENTICAL LAYOUT TO PROVIDE EQUAL PRESSURE DROPS.
8. PH NEUTRALIZER - ROUTE OUTLET TO FLOOR SINK
9. PROPANE PIPING SAME AS NAT GAS, BOILER B-2 ONLY.
10. THERMOWELL FOR TEMPERATURE SENSOR.

5 BOILER PIPING
NONE

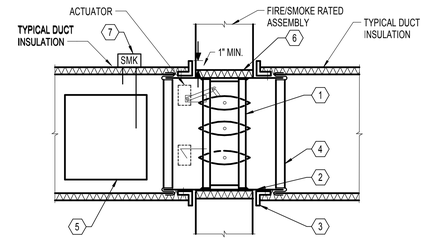

NOTES:
1. COMBINATION FIRE AND SMOKE DAMPER.
2. GALVANIZED STEEL SLEEVE-GAUGE NOT LESS THAN CONNECTION DUCT. FASTEN TO DAMPER FRAME AND PERIMETER ANGLES. CAULK BETWEEN DAMPER FRAME & SLEEVE.
3. PERIMETER ANGLES-14 GA. GALVANIZED STEEL, 1 1/2" x 1 1/2" MIN. TO PROVIDE 1" MIN. OVERLAP OF OPENING ON ALL 4 SIDES. DO NOT FASTEN TO PARTITION.
4. AIR TIGHT, BREAKAWAY DUCT CONNECTION.
5. ACCESS PANEL-SIZE & LOCATION TO PERMIT SERVICING FUSIBLE ROD AND LINK. ACTUATOR TO BE LOCATED OUT OF AIR STREAM. LOCATE PANEL WITHIN 12" OF FSD.
6. PROVIDE 15/16" TO 1/2" CLEARANCE ON HEIGHT & WIDTH, OR AS SPECIFIED BY DAMPER MANUFACTURER. FILL OPENING WITH FIRESTOP MATERIAL.
7. SMOKE DETECTOR FURNISHED PER DIVISION 26, INSTALLED PER DIVISION 23, POWER WIRING PER DIVISION 26, CONTROL WIRING PER DIVISION 28.

2 COMBINATION FIRE/SMOKE DAMPER
NONE

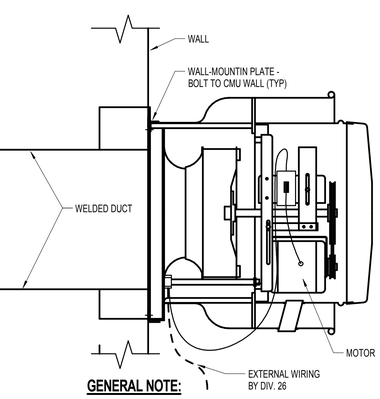

GENERAL NOTE:
1. SEE SPECIFICATIONS FOR VIBRATION ISOLATION AND SEISMIC RESTRAINT.

13 GREASE EXHAUST FAN
NONE

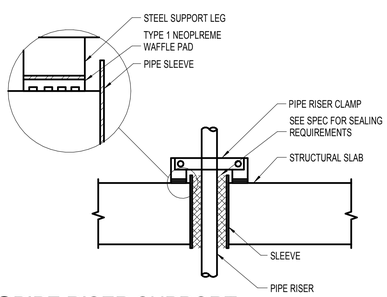

10 PIPE RISER SUPPORT
NONE

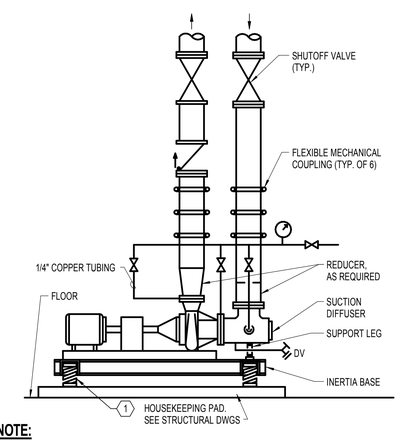

NOTE:
1. SEE SPECIFICATIONS FOR VIBRATION ISOLATION AND SEISMIC RESTRAINT.

6 BASE MOUNTED PUMP PIPING
NONE

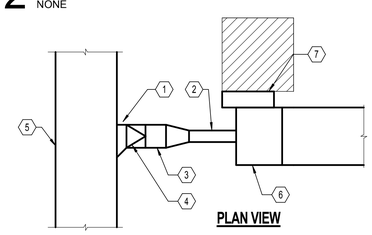

NOTES:
1. RECTANGULAR SHOE TAP FITTING
2. INLET DUCT. MINIMUM STRAIGHT LENGTH = 3'-0", DUCT SIZE TO BE SAME SIZE AS TERMINAL UNIT INLET. FLEXIBLE DUCT CONNECTIONS ARE NOT ALLOWED.
3. BRANCH DUCT. IF UNDER 5'-0" IN LENGTH, DUCT SIZE TO BE SAME SIZE AS TERMINAL UNIT INLET. IF LENGTH IS 5'-0" OR OVER, DUCT SIZE TO BE AS SHOWN ON PLAN.
4. ROUND TO RECTANGULAR TRANSITION.
5. RECTANGULAR LOW-PRESSURE SUPPLY DUCT.
6. TERMINAL UNIT
7. CONTROL ENCLOSURE. PROVIDE 36" CLEARANCE DIRECTLY IN FRONT OF ENCLOSURE, MOUNT CONTROLS AND PIPING CONNECTIONS ON SAME SIDE OF UNIT.

3 TYPICAL TERMINAL UNIT
NONE

PIVOT ARCHITECTURE
REGISTERED PROFESSIONAL ENGINEER 18329PE ANDREW P. COLLINS JR.
10-23-2014
EXPIRES 12-31-15
PAE
Portland | San Francisco | Seattle
pae-engineers.com

HOWARD RECONCILED SET
EUGENE SCHOOL DISTRICT 4J
700 HOWARD AVE, EUGENE, OREGON 97404
HOWARD ELEMENTARY SCHOOL

DETAILS - MECHANICAL

PROJECT #	1336
ISSUE DATE:	10/28/2014
DRAWN:	SMR
CHECKED:	NPC
REVISIONS:	

M501

PRINTED ON: 10/23/2014 3:30:40 PM FROM FILE: C:\Revit Local Files\13-1532_HES MEP\413-1532_HES MEP14_stacy.hansen.rvt

© 2014 PIVOT ARCHITECTURE

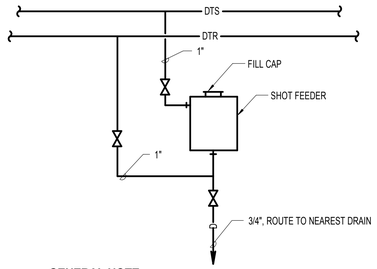

GENERAL NOTE:

1. INSULATE PIPING AND CHEMICAL FEEDER.

7 BY-PASS CHEMICAL FEEDER
NONE

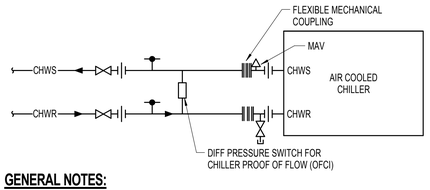

GENERAL NOTES:

1. INSTALL ALL PIPING TO ALLOW SERVICING AND REPAIR ACCESS. INCLUDE A UNION OR VICTAULIC TYPE COUPLING IN PIPING AT A LOCATION IN EACH PIPE THAT ALLOWS PIPES TO BE EASILY REMOVED FOR TUBE BUNDLE MAINTENANCE.

2. VIBRATION ISOLATION AND SEISMIC RESTRAINT PER SPECS.

3 CHILLER PIPING CONNECTIONS
NONE

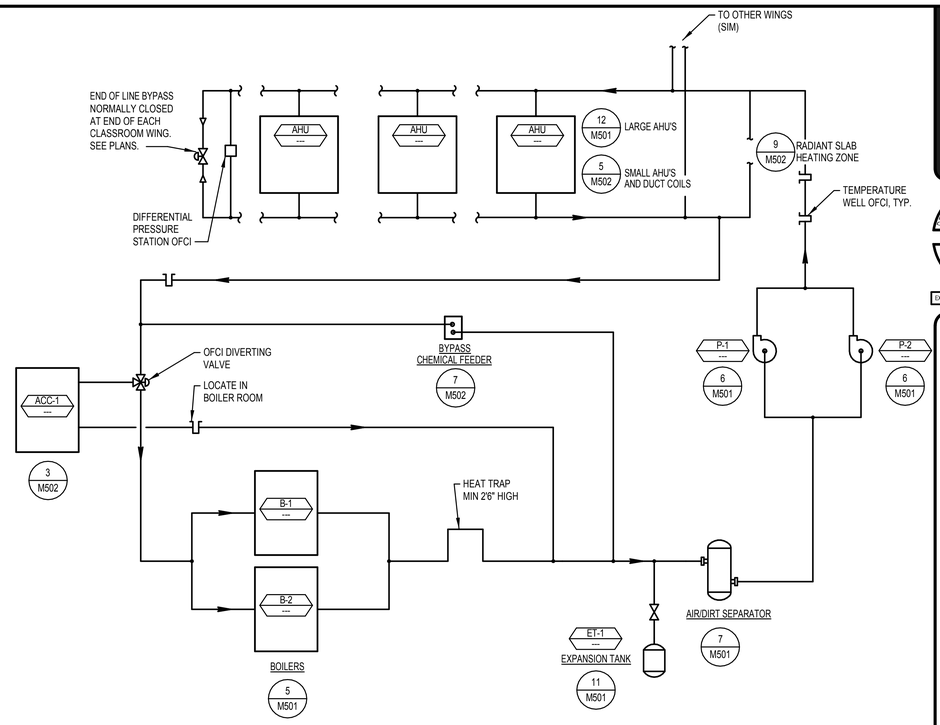

1 HEATING/COOLING WATER SYSTEM
NONE

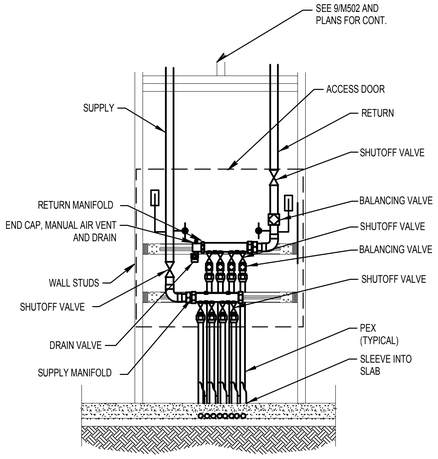

GENERAL NOTE:

1. BALANCING VALVES INTEGRATED WITH MANIFOLD ARE ACCEPTABLE. ADDITIONAL ISOLATION VALVES ARE REQUIRED AS SHOWN.

8 RADIANT MANIFOLD DETAIL
NONE

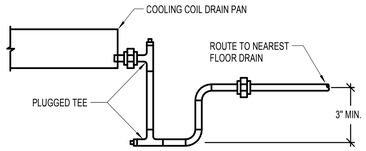

NOTES:

1. DRAIN SIZE IS OUTLET SIZE UNLESS SHOWN LARGER.

4 COIL DRAIN PIPING
NONE

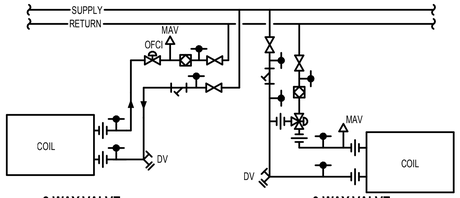

2-WAY VALVE
TYPICAL EXCEPT WHERE NOTED

3-WAY VALVE
USE ONLY WHERE NOTED

NOTE:

1. TYPICAL OF DUCT COILS, SMALL AIR HANDLERS AND FAN COIL UNITS.

5 HEATING COIL PIPING DETAIL
NONE

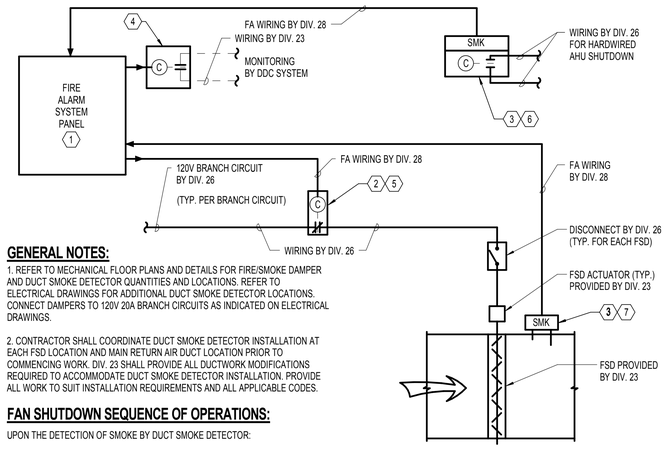

GENERAL NOTES:

1. REFER TO MECHANICAL FLOOR PLANS AND DETAILS FOR FIRE/SMOKE DAMPER AND DUCT SMOKE DETECTOR QUANTITIES AND LOCATIONS. REFER TO ELECTRICAL DRAWINGS FOR ADDITIONAL DUCT SMOKE DETECTOR LOCATIONS. CONNECT DAMPERS TO 120V 20A BRANCH CIRCUITS AS INDICATED ON ELECTRICAL DRAWINGS.

2. CONTRACTOR SHALL COORDINATE DUCT SMOKE DETECTOR INSTALLATION AT EACH FSD LOCATION AND MAIN RETURN AIR DUCT LOCATION PRIOR TO COMMENCING WORK. DIV. 23 SHALL PROVIDE ALL DUCTWORK MODIFICATIONS REQUIRED TO ACCOMMODATE DUCT SMOKE DETECTOR INSTALLATION. PROVIDE ALL WORK TO SUIT INSTALLATION REQUIREMENTS AND ALL APPLICABLE CODES.

FAN SHUTDOWN SEQUENCE OF OPERATIONS:

UPON THE DETECTION OF SMOKE BY DUCT SMOKE DETECTOR:

DUCT DECTECTOR SHALL SHUT DOWN AIR HANDLER DIRECTLY.

UPON FIRE ALARM RESET AFTER THE DETECTION OF SMOKE HAS OCCURRED:

THE FIRE ALARM SYSTEM SHALL OPEN ALL COMBINATION FIRE/SMOKE DAMPERS VIA ADDRESSABLE CONTROL RELAY(S).

NOTES:

1. REFER TO ELECTRICAL PLANS FOR FIRE ALARM PANEL LOCATION.
2. MOUNT ADJACENT TO APPROPRIATE ELECTRICAL PANEL.
3. PROVIDE/MAINTAIN WORKING ACCESS TO ALL DUCT SMOKE DETECTORS.
4. REMOTE ADDRESSABLE FIRE ALARM RELAY PROVIDED BY DIV. 28 (FORM C CONTACT). MOUNT ADJACENT TO DDC PANEL IN BOILER ROOM..
5. REMOTE ADDRESSABLE FIRE ALARM RELAY BY DIV. 28
6. AHU RETURN AIR DUCT SMOKE DETECTOR WITH SEPARATELY ADDRESSABLE RELAY BASE (FORM C CONTACT) FURNISHED BY DIV. 28. WIRED BY DIV. 28 TO FIRE ALARM SYSTEM. DETECTOR INSTALLED BY DIV. 23.
7. DUCT SMOKE DETECTOR FURNISHED BY DIV. 28. WIRED BY DIV. 28 TO FIRE ALARM SYSTEM. INSTALLED BY DIV. 23.

2 HVAC AND FIRE ALARM SYSTEM INTERFACE
NONE

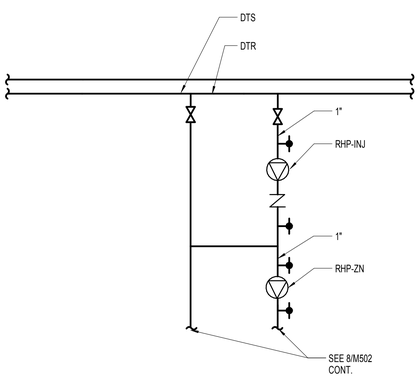

9 RADIANT ZONE PUMPING DETAIL
NONE

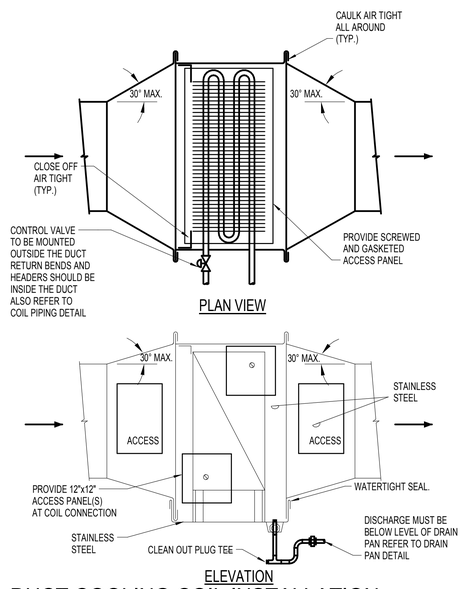

6 DUCT COOLING COIL INSTALLATION
NONE

PIVOT ARCHITECTURE

REGISTERED PROFESSIONAL ENGINEER 18329PE NICHOLAS P. COLLINS JR. 10-23-2014 EXPIRES 12-31-15

PAE
Portland | San Francisco | Seattle
pae-engineers.com

HOWARD RECONCILED SET
EUGENE SCHOOL DISTRICT
700 HOWARD AVE, EUGENE, OREGON 97404
HOWARD ELEMENTARY SCHOOL

DETAILS - MECHANICAL

PROJECT #	1336
ISSUE DATE:	10/28/2014
DRAWN:	SMR
CHECKED:	NPC
REVISIONS	

M502

PRINTED ON: 10/23/2014 3:30:42 PM FROM FILE: C:\Revit Local Files\13-1532_HES MEP\13-1532_HES MEP14_stacy.hansen.rvt

© 2014 PIVOT ARCHITECTURE

STANDARD MECHANICAL ABBREVIATIONS

AF	AIRFOIL	IE	INVERT ELEVATION
AFF	ABOVE FINISHED FLOOR	IN	INCH(ES)
AHP	APPARATUS HOUSING PLENUM	INSUL	INSULATION
ALT	ALTERNATIVE	ISOL	ISOLAT(OR)(ION)
AL	ALUMINUM	KW	KILOWATT
APD	AIR PRESSURE DROP	KWH	KILOWATT HOUR
APPROX	APPROXIMATELY	L	LENGTH
ARCH	ARCHITECT(URAL)	LAT	LEAVING AIR TEMP
AUTO	AUTOMATIC	LB	POUND
BDD	BACKDRAFT DAMPER	LDB	LEAVING DRY BULB
BI	BACKWARD INCLINED	LF	LINEAR FEET
BLDG	BUILDING	LFT	LEAVING FLUID TEMPERATURE
BSMT	BASEMENT	LVG	LEAVING
BTU	BRITISH THERMAL UNIT	LWB	LEAVING WET BULB
BTUH	BRITISH THERMAL UNITS PER HOUR	LWT	LEAVING WATER TEMPERATURE
CFH	CUBIC FEET PER HOUR	MAX	MAXIMUM
CFM	CUBIC FEET PER MINUTE	MBH	THOUSAND BTU PER HOUR
CFS	CUBIC FEET PER SECOND	MECH	MECHANICAL
CLG	CEILING OR COOLING	MFR	MANUFACTURER
CONC	CONCRETE	MIN	MINIMUM
CONN	CONNECT(ION)	MISC	MISCELLANEOUS
CONT	CONTINUE(ED)(UATION)	MTD	MOUNTED
CL	CENTERLINE	NC	NORMALLY CLOSED
DDC	DIRECT DIGITAL CONTROL	NIC	NOT IN CONTRACT
DEFL	DEFLECTION	NO	NORMALLY OPEN
DN	DOWN	OAD	OUTSIDE AIR DAMPER
DP	DEW POINT	OC	ON CENTER DISTANCE
DWDI	DOUBLE WIDTH DOUBLE INLET	OSA	OUTSIDE AIR
DWG	DRAWING	PH	PHASE
EA	EXHAUST AIR	PP	POLYPROPYLENE
EAD	EXHAUST AIR DAMPER	PSI	POUNDS PER SQUARE INCH
EAT	ENTERING AIR TEMPERATURE	PVC	POLYVINYL CHLORIDE
EDB	ENTERING DRY BULB	PVS	PVC COATED STEEL
EFF	EFFICIENCY	R (RAD)	RADIUS
EFT	ENTERING FLUID TEMPERATURE	RA	RETURN AIR
ELEC	ELECTRIC(AL)	RAD	RETURN AIR DAMPER
ELEV	ELEVATION	REV	REVISION
ENGR	ENGINEER	RH	RELATIVE HUMIDITY
EQ	EQUAL	RPM	REVOLUTIONS PER MINUTE
EQUIP	EQUIPMENT	SA	SUPPLY AIR
ESP	EXTERNAL STATIC PRESSURE	SCFM	STANDARD CUBIC FEET PER MINUTE
EWB	ENTERING WET BULB	SD	SMOKE DAMPER
EWT	ENTERING WATER TEMPERATURE	SECT	SECTION
EX	EXTRACTOR	SENS	SENSIBLE
EXH	EXHAUST	SIM	SIMILAR
EXIST	EXISTING	SP	STATIC PRESSURE
EXP	EXPANSION	SPEC	SPECIFICATION
F	DEGREES FAHRENHEIT	SQ	SQUARE
FC	FORWARD CURVED	SF	SQUARE FOOT(FEET)
FIG	FIGURE	SQ IN	SQUARE INCH(ES)
FILT	FILTER	SS	STAINLESS STEEL
FLEX	FLEXIBLE	STL	STEEL
FPD	FLUID PRESSURE DROP	STRUCT	STRUCTUR(E)(AL)
FPM	FEET PER MINUTE	SWP	SINGLE WALL PLENUM
FPS	FEET PER SECOND	SWSI	SINGLE WIDTH SINGLE INLET
FT	FEET/FOOT	TEMP	TEMPERATURE
FTR	FINNED TUBE RADIATOR	TSP	TOTAL STATIC PRESSURE
FU	FIXTURE UNIT	TYP	TYPICAL
FUT	FUTURE	V	VOLTS
FV	FACE VELOCITY	VD	VOLUME DAMPER
GA	GAGE/GAUGE	VEL	VELOCITY
GAL	GALLON	VERT	VERTICAL
GALV	GALVANIZED	VFD	VARIABLE FREQUENCY DRIVE
GLY	GLYCOL	VTR	VENT THROUGH ROOF
GPH	GALLONS PER HOUR	W	WIDTH
GPM	GALLONS PER MINUTE	WG	WATER GAUGE
H	HEIGHT	WPD	WATER PRESSURE DROP
HORIZ	HORIZONTAL	WTD	WATER TEMPERATURE DROP
HP	HORSEPOWER	WTR	WATER TEMPERATURE RISE
HTG	HEATING	W/	WITH
ID	INSIDE(DIAMETER/DIMENSION)	W/O	WITHOUT

SPECIALTY PIPING

NPW	NPW	NON-POTABLE WATER
PROP	PROP	PROPANE GAS

PLUMBING SYMBOLS

TB	THRUST BLOCK
CO	CLEANOUT
WCO	WALL CLEANOUT
FCO	FLOOR CLEANOUT
CTG	CLEANOUT TO GRADE
FD	FLOOR DRAIN
AD	AREA DRAIN
CB	CATCH BASIN
FS	FLOOR SINK
RD	ROOF DRAIN
OD	OVERFLOW DRAIN
TD	TRENCH DRAIN

MISC. FITTINGS & SYMBOLS

	DIRECTION OF FLOW
	DIRECTION OF SLOPE
	PIPE SLEEVE
	REDUCER
	ANCHOR
	ELBOW (90°)
	ELBOW (45°)
	TEE
	CROSS
	PIPING CONNECTIONS
	JOINT OR COUPLING POINT
	UNION
	FLANGED CONNECTION
	CAP
	PLUG OR BLIND FLANGE
	RISER
	ELBOW UP
	ELBOW DOWN
	TEE UP
	TEE DOWN
	HORIZONTAL TEE
	FLEXIBLE CONNECTION
	BALL JOINT
MC	MECHANICAL COUPLING

PLUMBING PIPING

W	W	WASTE (ABOVE GRADE OR FLOOR)
W	W	WASTE (BELOW GRADE OR FLOOR)
PW	PW	PUMPED WASTE (ABOVE GRADE OR FLOOR)
PW	PW	PUMPED WASTE (BELOW GRADE OR FLOOR)
GW	GW	GREASE WASTE (ABOVE GRADE OR FLOOR)
GW	GW	GREASE WASTE (BELOW GRADE OR FLOOR)
SD	SD	STORM DRAIN (ABOVE GRADE OR FLOOR)
SD	SD	STORM DRAIN (BELOW GRADE OR FLOOR)
OD	OD	OVERFLOW DRAIN (ABOVE GRADE OR FLOOR)
OD	OD	OVERFLOW DRAIN (BELOW GRADE OR FLOOR)
D	D	DRAIN (CONDENSATE/INDIRECT)
	V	VENT
	CW	COLD WATER
	HW	HOT WATER
	RHW	RECIRCULATING HOT WATER
HTW	HTW	140° HOT WATER
RHTW	RHTW	140° RECIRCULATING HOT WATER
RTW	RTW	RECIRCULATING TEMPERED WATER
WW	WW	WELL WATER
ICW	ICW	INDUSTRIAL COLD WATER
G	G	NATURAL GAS (LOW PRESSURE)
MG	MG	NATURAL GAS (MEDIUM PRESSURE)
GV	GV	GAS VENT

GENERAL NOTE

THIS IS A STANDARD LEGEND SHEET, THEREFORE, SOME SYMBOLS MAY APPEAR ON THIS SHEET THAT DO NOT APPEAR ON THE DRAWINGS.

MISC. VALVES & COCKS

	SHUT-OFF VALVE (SEE SPECS FOR TYPE REQUIRED)
	GLOBE VALVE
S	SHUT-OFF VALVE W/ TAMPER SWITCH
	TRIPLE DUTY VALVE
	CHECK VALVE
	2-WAY CONTROL VALVE
	3-WAY CONTROL VALVE
	BALANCING VALVE
FC	FLOW CONTROL VALVE
SO	SOLENOID VALVE
	PRESSURE REDUCING VALVE
MAV AAV	AIR VENT (MANUAL/AUTOMATIC)
	RELIEF VALVE
	STRAINER
	STRAINER W/ BLOWDOWN
DV	DRAIN VALVE
HB	HOSE BIBB
WH	WALL HYDRANT
G GH	GROUND HYDRANT
F&T/IB	STEAM TRAP
	PRESSURE GAUGE
	PRESSURE/TEMPERATURE TEST PLUG
	THERMOMETER
F	FLOW SWITCH
T	TEMPERATURE TRANSMITTER
S (SIZE)	SHOCK ARRESTOR
V	VACUUM BREAKER
WFM	WATER FLOW METER
RPBA	REDUCED PRESSURE BACKFLOW ASSEMBLY
DCVA	DOUBLE CHECK VALVE ASSEMBLY
DCDA	DOUBLE CHECK DETECTOR ASSEMBLY
BWV	BACKWATER VALVE
UG	UNDERGROUND GATE VALVE W/BOX
PIV	UNDERGROUND GATE W/POST INDICATOR
	OUTSIDE SCREW & YOKE
	Y PATTERN BOILER BLOWDOWN VALVE
	NON-RETURN STOP VALVE
	QUICK OPENING BOILER BLOWDOWN VALVE

SYMBOLS

A	ACCESS PANEL	K	CAP EXISTING / CAP FOR FUTURE
B	BELOW GRADE / FLOOR	R	RELOCATE EXISTING
C	CONNECT TO EXISTING	X	REMOVE EXISTING
E	EXISTING TO REMAIN	1	NOTE

PIVOT ARCHITECTURE

REGISTERED PROFESSIONAL ENGINEER 18329PE

EXPIRES: 12-31-15

PAE
Portland | San Francisco | Seattle
pae-engineers.com

HOWARD RECONCILED SET

EUGENE SCHOOL DISTRICT
700 HOWARD AVE, EUGENE, OREGON 97404

HOWARD ELEMENTARY SCHOOL

SYMBOLS, LEGENDS AND ABBREVIATIONS - PLUMBING

PROJECT #	1330	REVISIONS
ISSUE DATE:	10/28/2014	
DRAWN:	T.E.	
CHECKED:	C.JB	

P001

PRINTED ON: 10/23/2014 3:30:44 PM FROM FILE: C:\Revit Local Files\13-1532_HES MEP\413-1532_HES MEP14_alacy.hansen.rvt

© 2014 PIVOT ARCHITECTURE

WASTE PIPING SIZING SCHEDULE

SIZE	MAXIUM DFU COUNT	
	HORIZONTAL	VERTICAL
1-1/4"	UP TO 1 DFU	UP TO 1 DFU
1-1/2"	UP TO 2 DFU	UP TO 2 DFU
2"	UP TO 8 DFU	UP TO 16 DFU
2-1/2"	UP TO 14 DFU	UP TO 32 DFU
3"	UP TO 48 DFU	UP TO 48 DFU
4"	UP TO 216 DFU	UP TO 256 DFU
6"	UP TO 720 DFU	UP TO 1,380 DFU

NOTES:
BASIS OF DESIGN: 2011 OREGON PLUMBING SPECIALTY CODE, CHAPTER 7 "SANITARY DRAINAGE". ALL WASTE PIPING SIZED AT ...1/4"/FT UNLESS OTHERWISE NOTED.

DOMESTIC PIPING SIZING SCHEDULE

SIZE	MAXIUM DFU COUNT	
	FLUSH TANK	FLUSH VALVE
1/2"	UP TO 1 FU	- -
3/4"	UP TO 4 FU	- -
1"	UP TO 12 FU	- -
1-1/4"	UP TO 26 FU	- -
1-1/2"	UP TO 42 FU	- -
2"	UP TO 151 FU	- -
2-1/2"	UP TO 205 FU	- -
3"	UP TO 275 FU	- -

NOTES:
BASIS OF DESIGN: 2011 OREGON PLUMBING SPECIALTY CODE, APPENDIX A "RECOMMENDED RULES FOR SIZING THE WATER SUPPLY SYSTEM". PIPING SIZED ON 4 PSI/100 FT. DROP, INCOMING WATER PRESSURE OF 88 PSI AND VELOCITIES NOT TO EXCEED 8 FT/SEC. (COLD WATER) AND NOT TO EXCEED 5 FT/SEC. (HOT WATER).

NON-POTABLE PIPING SIZING SCHEDULE

SIZE	MAXIUM DFU COUNT	
	NON-FLUSH VALVE	FLUSH VALVE
1/2"	- -	- -
3/4"	- -	- -
1"	- -	- -
1-1/4"	- -	UP TO 1 FU
1-1/2"	- -	UP TO 13 FU
2"	- -	UP TO 95 FU
2-1/2"	- -	UP TO 365 FU
3"	- -	UP TO 559 FU

NOTES:
BASIS OF DESIGN: 2011 OREGON PLUMBING SPECIALTY CODE, APPENDIX A "RECOMMENDED RULES FOR SIZING THE WATER SUPPLY SYSTEM". PIPING SIZED ON 6 PSI/100 FT. DROP. VELOCITIES NOT TO EXCEED 8 FT/SEC. (NON-POTABLE WATER)

PLUMBING FIXTURE SCHEDULE

ITEM	DESCRIPTION	ROUGH-IN SIZE (INCHES)					NOTES
		W	V	NPW	CW	HW	
WC-1	WATER CLOSET	4	2	1-1/4	-	-	WALL HUNG, SUPPLIED BY RAIN WATER 1.28 GPF, CHILDREN ADA
WC-2	WATER CLOSET	4	2	1-1/4	-	-	WALL HUNG, SUPPLIED BY RAIN WATER 1.28 GPF, ADULT ADA
U-1	URINAL	2	1-1/2	1	-	-	WALL HUNG, SUPPLIED BY RAIN WATER 0.5 GPM, ADA
L-1	LAVATORY	2	1-1/2	-	1/2	1/2	TEMPERATURE SELECTION/METERING WALL HUNG, 20"x19", ADA
WS-1	WASH STATION	2	1-1/2	-	1/2	1/2	WALL HUNG,SINGLE BOWL WITH 3 LAV 0.5 GPM, ADA
S-1	SINK	2	1-1/2	-	1/2	1/2	STAINLESS STEEL COUNTER MOUNT, BUBBLER,
S-2	SINK	2	1-1/2	-	1/2	1/2	STAINLESS STEEL COUNTER MOUNT
S-3	SINK	2	1-1/2	-	1/2	1/2	STAINLESS STEEL, DOUBLE BOWL, COUNTER MOUNT
DF-1	DRINKING FOUNTAIN	2	1-1/2	-	1/2	-	DAUL HEIGHT, STAINLESS STEEL WALL MOUNTED
SH-1	SHOWER	2	1-1/2	-	3/4	3/4	FIBERGLASS ENCLOSURE, PRESSURE BALANCE MIXING VALVE, 1.5GPM SHOWER HEAD
MS-1	MOP SINK	3	2	"	3/4	3/4	FLOOR/CORNER MOUNTED, WALL MOUNTED FAUCET W/VACUUM BREAKER & HOSE THREAD OUTLET
WH-1	WALL HYDRANT	-	-	-	3/4	-	REMOVABLE HANDLE, FREEZE PROOF, W/VACUUM BREAKER
WH-2	WALL HYDRANT	-	-	-	1/2	1/2	DUAL TEMPERATURE, FREEZE PROOF, W/VACUUM BREAKER
SB-1	SUPPLY BOX	2	1-1/2	-	1/2	1/2	RECESSED, BOTTOM SUPPLIES, INTEGRAL SHOCK ARRESTOR
SB-2	SUPPLY BOX	-	-	-	1/2	-	RECESSED, BOTTOM SUPPLIES, INTEGRAL SHOCK ARRESTOR
WSCB-1	WATER SUPPLY CONTROL BOX	-	-	-	3/4	3/4	STAINLESS STEEL, INTEGRAL VACUUM BREAKER, SURFACE MOUNTED

KITCHEN EQUIPMENT CONNECTION SCHEDULE

ITEM	DESCRIPTION	ROUGH-IN SIZE (INCHES)				NOTES
		W	CW	HW	G	
19	ICE MACHINE	-	1/2	-	-	2
20	HAND SINK	1-1/2	1/2	1/2	-	3
22	SINK FAUCET	2	1/2	1/2	-	
31	CONVECTION STEAMER	-	3/4	-	1/2	1
33	DOUBLE STACK COMBI-OVEN STEAMER	-	(2)3/4	-	(2)3/4	1
30	KETTLE PANTRY FAUCET	-	1/2	1/2	-	
32	COOK TOP	-	-	-	3/4	1
44	SINK FAUCETS	2	1/2	1/2	-	
46	WAREWASHER	2	-	3/4	-	
48	WASTE COLLECTOR	2	3/4	3/4	-	
47	HOSE REEL	-	1/2	1/2	-	

NOTES:

1. PROVIDE AGA APPROVED FLEXIBLE CONNECTOR WITH QUICK-DISCONNECT AT POINT OF CONNECTION. COORDINATE WITH FOOD SERVICE CONTRACTOR FOR EXACT TYPE AND SIZE.
2. PROVIDE INDIRECT WASTE TO FLOOR SINK.
3. ALL KITCHEN FIXTURES PROVIDED WITH 140°F HOT WATER. PROVIDE SYMMONS 410-B MIXING VALVE AT CW & HW SUPPLIES TO TEMPER OUTLET WATER TO 100 F AT HAND WASH LOCATIONS. SEE KITCHEN PLUMBING PLAN FOR LOCATIONS.

PLUMBING EQUIPMENT SCHEDULE

ITEM	DESCRIPTION	ELECTRICAL
GWH-101 (DOMESTIC SYSTEM)	GAS WATER HEATER 285 CFH INPUT, 120 GALLON STORAGE 332 GPH RECOVERY @ 100°F RISE BASED ON: LOCHINVAR SHIELD	120 V, 1 PH
GWH-102 (REDUNDANT)	GAS WATER HEATER 285 CFH INPUT, 120 GALLON STORAGE 332 GPH RECOVERY @ 100°F RISE BASED ON: LOCHINVAR SHIELD	120 V, 1 PH
DET-101 (DOMESTIC SYSTEM)	DOMESTIC WATER EXPANSION TANK 11 GALLONS ACCEPTANCE VOLUME 18 GALLONS TANK VOLUME BASED ON: iTT WTA SERIES	-
MMV-101 (DOMESTIC SYSTEM)	MASTER MIXING VALVE 23 GPM FLOW RATE, WITH 5 PSI LOSS 140 F INLET TEMPERATURE 120 F OUTLET TEMPERATURE BASED ON: LEONARD NEW GENERATION MIXING VALVE	-
RHWP-101 (DOMESTIC SYSTEM)	RECIRCULATING HOT WATER PUMP IN-LINE CENTRIFUGAL PUMP 20 GPM @ 25 FT HEAD BASED ON: BELL & GOSSETT PL SERIES	2/5 HP 120 V, 1 PH
RHTWP-101 (KITCHEN SYSTEM)	RECIRCULATING HOT WATER PUMP IN-LINE CENTRIFUGAL PUMP 1.1 GPM @ 20 FT HEAD BASED ON: BELL & GOSSETT PL SERIES	1/12 HP 120 V, 1 PH
TP-1 THRU TP-11	ELECTRONIC TRAP PRIMER 1-20 OPENING MANIFOLD CALIBRATED FOR EQUAL WATER DISTRIBUTION, 1/2" OUTLET CONNECTION, TIME CLOCK, SOLENOID VALVE AND VACUUM BREAKER, RECESSED STAINLESS STEEL ENCLOSURE WITH DOOR. BASED ON: PRECISION PLUMBING PRODUCTS PRIMETIME ELECTRONIC TRAP PRIMER, PTS SERIES	120 V, 1 PH
RPBA-2 HVAC MAKE UP)	REDUCED PRESSURE BACKFLOW ASSEMBLY 10 GPM @ 14 PSIG LOSS BASED ON: FEBCO 860 (1")	
RPBA-3 (RIWS SYSTEM)	REDUCED PRESSURE BACKFLOW ASSEMBLY 20 GPM @ 12 PSIG LOSS BASED ON: FEBCO 860 (1-1/4")	-
RWTS-101 (RAINWATER SYSTEM SKID)	RAINWATER PUMP/FILTER SKID SYSTEM: PREPACKAGED SKID BASED ON FLOW THERM MODEL FTSS-RW-CL VIBRATION ISOLATION: TYPE 5, 2"MIN. DEFLECTION. ELECTRICAL CONNECTIONS AND CONTROLS BY OTHERS. SINGLE POINT ELECTRICAL CONNECTION	480 V, 3 PH
RWTS-101 (RAINWATER SYSTEM SKID)	RAIN WATER RECLAMATION STORAGE TANK 540 GALLON CAPACITY 48"DIAMETER x 86-1/2"TALL. 17"DIAMETER ACCESS WAY BASED ON: POLYPROCESSING	-
RWTS-101 (RAINWATER SYSTEM SKID)	RAIN WATER HYPO TREATMENT: DUPLEX CHEMICAL FEED PUMPS SIMPLEX MAGNETIC DRIVE RECIRCULATION PUMP WITH NEMA 4 PANEL. ORP CONTROLLER. BASIS OF DESIGN: WATER CONTROL CORP. DISINFECTIONS SYSTEM	(2) 5 HP 480 V, 3 PH
SP-1	SUMP PUMP 50 GPM @ 12 FT HEAD BASED ON: GRUNDFOS	1/2 HP 120 V, 1 PH
RWSP-1	RAIN WATER SUMP PUMP 50 GPM @ 18 FT HEAD BASED ON: WEIL	1/2 HP 120 V, 1 PH
SWOP-1	STORM WATER OVERFLOW PUMP DUPLEX SUMP PUMPS 300 GPM @ 25 FT HEAD, 300 GPM @ 25 FT HEAD BASED ON: WEIL	(2) 5 HP 480 V, 3 PH

PLUMBING DESIGN CRITERIA

DOMESTIC WATER PIPING SYSTEM
BASIS OF DESIGN: 2011 OREGON PLUMBING SPECIALTY CODE, APPENDIX A "RECOMMENDED RULES FOR SIZING THE WATER SUPPLY SYSTEM". PIPING SIZED ON 3 PSI/100 FT. DROP, VELOCITIES NOT TO EXCEED 8 FT/SEC. (COLD WATER) AND NOT TO EXCEED 5 FT/SEC. (HOT WATER).

WASTE AND VENT PIPING SYSTEM
BASIS OF DESIGN: 2011 OREGON PLUMBING SPECIALTY CODE, CHAPTER 7 "SANITARY DRAINAGE".
ALL WASTE PIPING SIZED AT %%1331/4"/FT UNLESS OTHERWISE NOTED.

ROOF DRAIN/STORM DRAIN PIPING SYSTEMS
BASIS OF DESIGN: 2011 OREGON PLUMBING SPECIALTY CODE, CHAPTER 11 "STORM DRAINAGE".
STORM DRAIN PIPING SIZED AT 1/8" PER FT SLOPE UNLESS OTHERWISE
NOTED AND A RAINFALL RATE OF 1.3" / HR.

NATURAL GAS SYSTEM
BASIS OF DESIGN: 2010 OREGON MECHANICAL SPECIALTY CODE, APPENDIX C, "FUEL GAS",
SECTION C402 "PIPE SIZING". EQUIVALENT LENGTH OF PIPE: 400 FT (MPG), 50 FT (G)

PIVOT ARCHITECTURE

REGISTERED PROFESSIONAL ENGINEER 18329PE
OREGON
NICHOLAS P. COLLINS JR.
10-23-2014
EXPIRES: 12-31-15

PAE
Portland | San Francisco | Seattle
pae-engineers.com

HOWARD RECONCILED SET
EUGENE SCHOOL DISTRICT
700 HOWARD AVE, EUGENE, OREGON 97404
HOWARD ELEMENTARY SCHOOL

EQUIPMENT SCHEDULE - PLUMBING

PROJECT #	1306
ISSUE DATE:	10/28/2014
DRAWN:	T.E.
CHECKED:	C.JB

REVISIONS

P002

PRINTED ON: 10/23/2014 3:30:46 PM FROM FILE: C:\Revit Local Files\13-1532_HES MEP\4\13-1532_HES MEP14_stacy.hansen.rvt

© 2014 PIVOT ARCHITECTURE

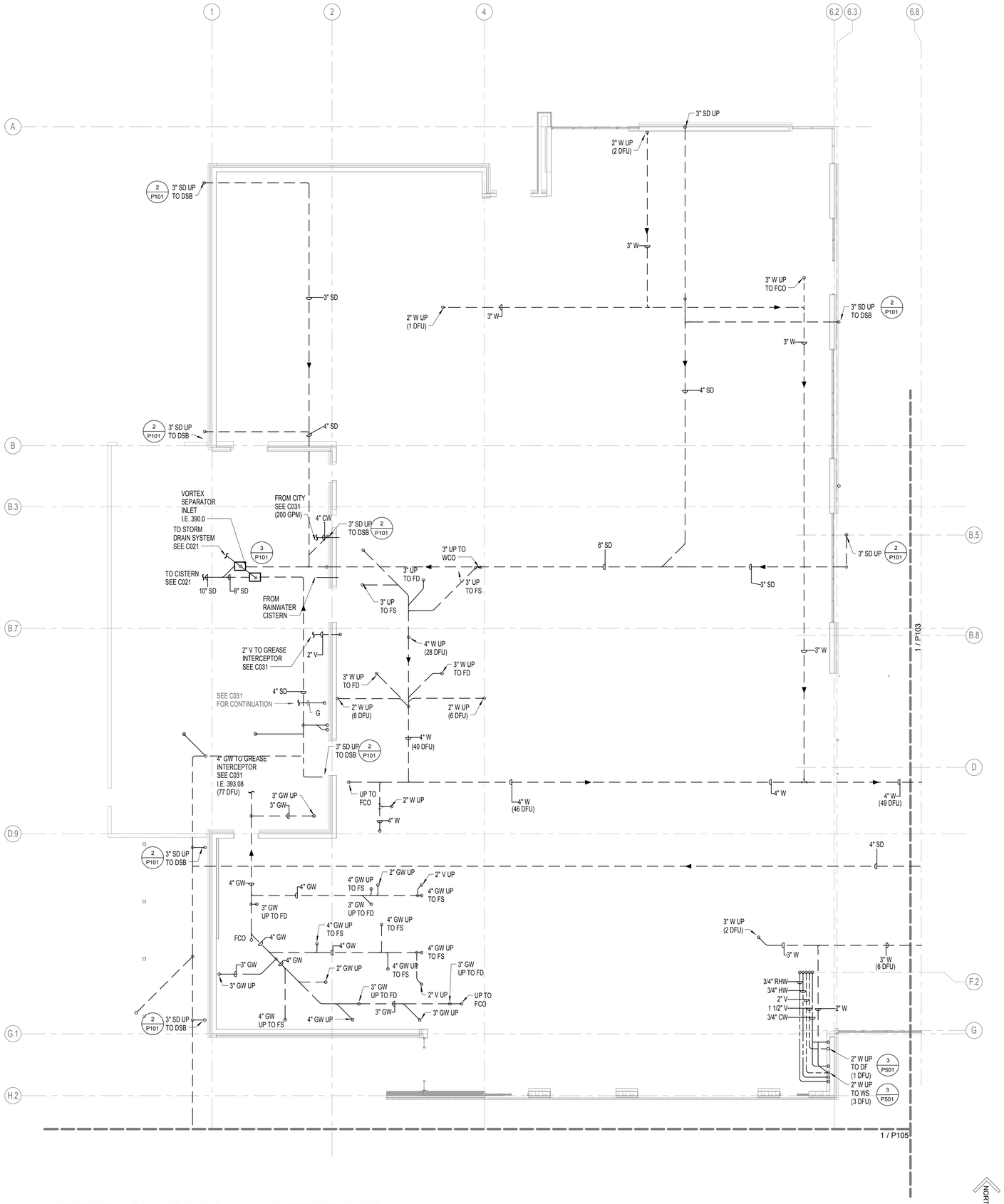

1 SECTOR A PLUMBING PLAN - UNDERGROUND

1/8" = 1'-0"

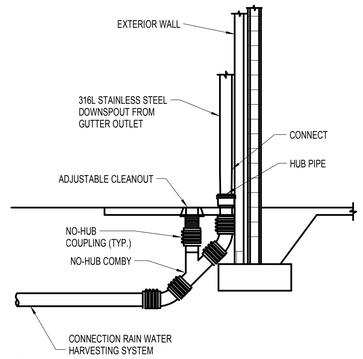

2 Downspout Connection

None

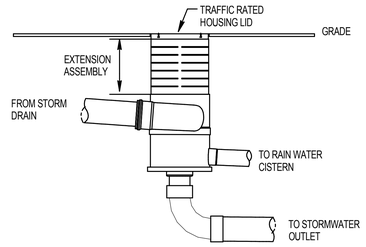

3 Vortex Separator

None

GENERAL NOTES:

A. IT SHALL BE THE RESPONSIBILITY OF THIS CONTRACTOR TO CORDINATE THE WORK WITH THAT OF ALL OTHER TRADES, INCLUDING BUT NOT LIMITED TO: ELECTRICAL, SPRINKLER, HVAC, STRUCTURAL AND GENERAL ARCHITECTURE.

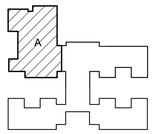

PIVOT ARCHITECTURE

REGISTERED PROFESSIONAL ENGINEER
18329PE
NICHOLAS P. COLLINS, JR.
10-23-2014
EXPIRES 12-31-15

PAE
Portland | San Francisco | Seattle
pae-engineers.com

HOWARD RECONCILED SET
EUGENE SCHOOL DISTRICT
700 HOWARD AVE, EUGENE, OREGON 97404
HOWARD ELEMENTARY SCHOOL

SECTOR A PLUMBING PLAN - UNDERGROUND

PROJECT #:	13-1532
ISSUE DATE:	10/28/2014
DRAWN:	T.C.
CHECKED:	C.J.B.

REVISIONS

P101

PRINTED ON: 10/23/2014 3:30:48 PM FROM FILE: C:\Revit Local Files\13-1532_HES MEP\4\13-1532_HES MEP14_stacy.hansen.rvt

© 2014 PIVOT ARCHITECTURE

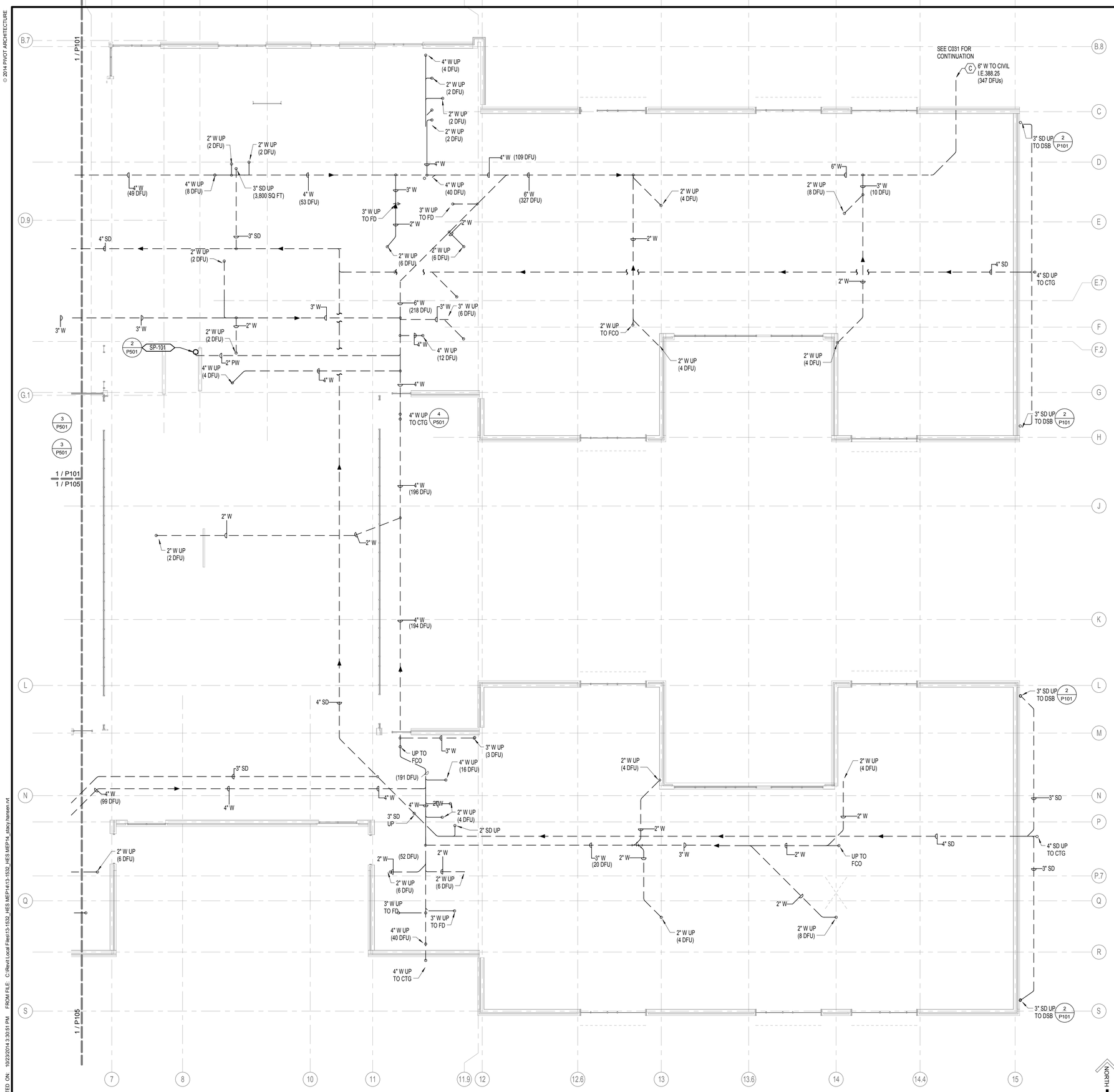

1 SECTOR B PLUMBING PLAN - UNDERGROUND
1/8" = 1'-0"

GENERAL NOTES:

A. IT SHALL BE THE RESPONSIBILITY OF THIS CONTRACTOR TO CORDINATE THE WORK WITH THAT OF ALL OTHER TRADES, INCLUDING BUT NOT LIMITED TO: ELECTRICAL, SPRINKLER, HVAC, STRUCTURAL AND GENERAL ARCHITECTURE.

B.REFER TO RISER DIAGRAM FOR COMPLETE SIZES, SHUT-OFF VALVE AND WATER HAMMER ARRESTER LOCATIONS.

PIVOT ARCHITECTURE

REGISTERED PROFESSIONAL ENGINEER 18329PE OREGON JAN 19 1982 ANDREAS P. COLLINGS JR. 10-23-2014 EXPIRES 12-31-15

PAE
Portland | San Francisco | Seattle
pae-engineers.com

HOWARD RECONCILED SET
EUGENE SCHOOL DISTRICT
700 HOWARD AVE, EUGENE, OREGON 97404
HOWARD ELEMENTARY SCHOOL

SECTOR B PLUMBING PLAN - UNDERGROUND

PROJECT #	1336
ISSUE DATE:	10/28/2014
DRAWN:	TJL
CHECKED:	CJB

REVISIONS

P103

PRINTED ON: 10/23/2014 3:30:51 PM FROM FILE: C:\Revit Local Files\13-1532_HES MEP\13-1532_HES MEP14_stacy.hansen.rvt

© 2014 PIVOT ARCHITECTURE

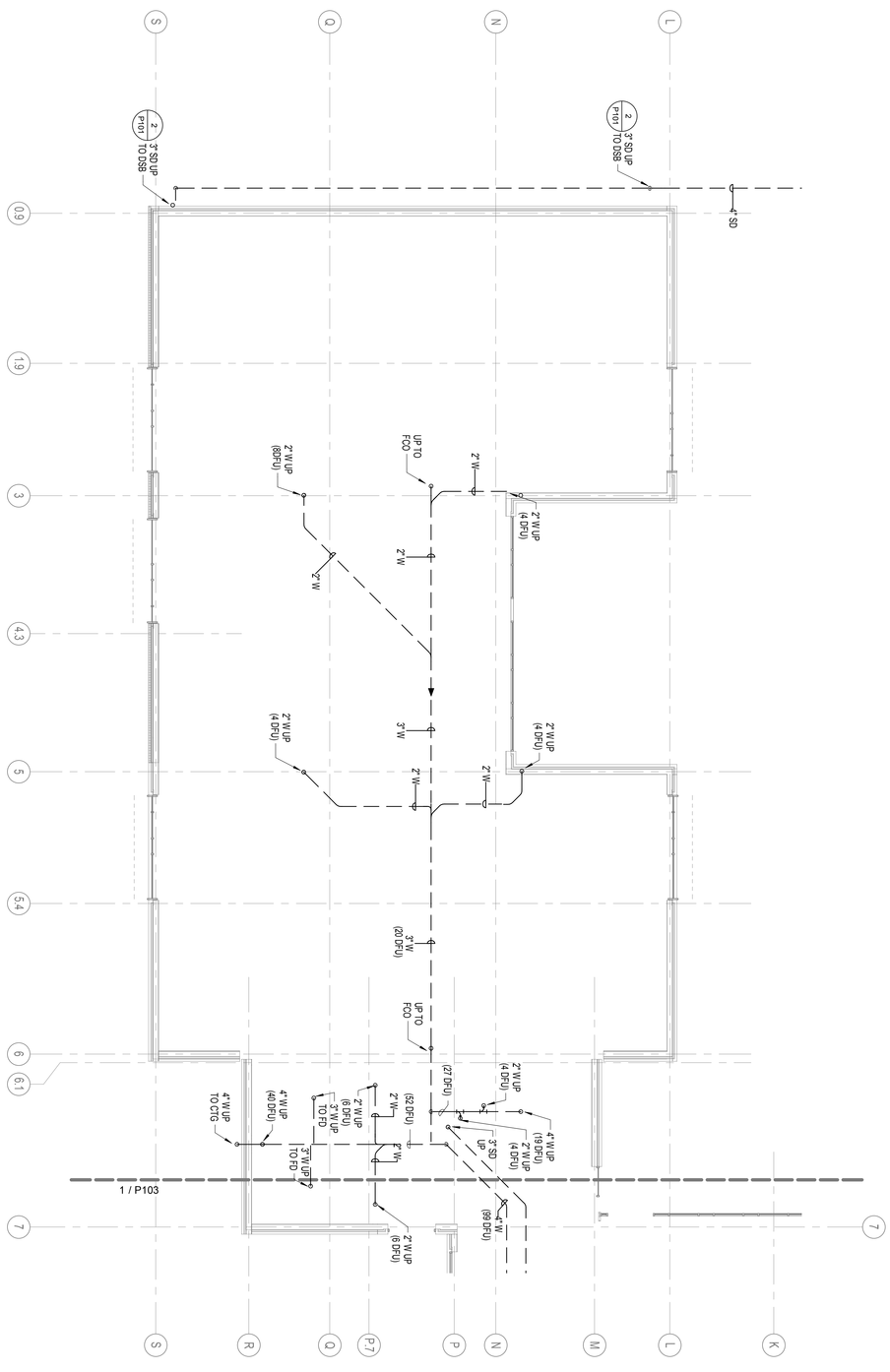

1 SECTOR C PLUMBING PLAN - UNDERGROUND

1/8" = 1'-0"

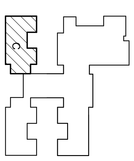

P105	PROJECT #: 1336	REVISIONS:
	ISSUE DATE: 10/28/2014	
	DRAWN: T.JL	
	CHECKED: CJB	

SECTOR C PLUMBING PLAN - UNDERGROUND

HOWARD RECONCILED SET

EUGENE SCHOOL DISTRICT
700 HOWARD AVE, EUGENE, OREGON 97404

HOWARD ELEMENTARY SCHOOL

PAE
Portland | San Francisco | Seattle
pae-engineers.com

REVISED: 03-18

REGISTERED PROFESSIONAL ENGINEER
CHRISTOPHER J. BOSCHETTI
10/23/14

PIVOT ARCHITECTURE

© 2014 PIVOT ARCHITECTURE

GENERAL NOTES:

A. IT SHALL BE THE RESPONSIBILITY OF THIS CONTRACTOR TO CORDINATE THE WORK WITH THAT OF ALL OTHER TRADES, INCLUDING BUT NOT LIMITED TO: ELECTRICAL, SPRINKLER, HVAC, STRUCTURAL AND GENERAL ARCHITECTURE.

B. REFER TO RISER DIAGRAM FOR COMPLETE SIZES. SHUT-OFF VALVE AND WATER HAMMER ARRESTER LOCATIONS.

NOTES:

1. PROVIDE WATER HAMMER ARRESTER BEHIND ACCESS PANEL. COORDINATE LOCATION WITH ARCHITECT.

2.PROVIDE SHUT OFF VALVES BEHIND ACCESS PANEL. COORDINATE LOCATION WITH ARCHITECT.

3. PROVIDE SHUT OFF VALVES AND WATER HAMMER ARRESTER BEHIND ACCESS PANEL. COORDINATE LOCATION WITH ARCHITECT.

4. PROVIDE BALANCING VALVE BEHIND ACCESS PANEL. COORDINATE LOCATION WITH ARCHITECT.

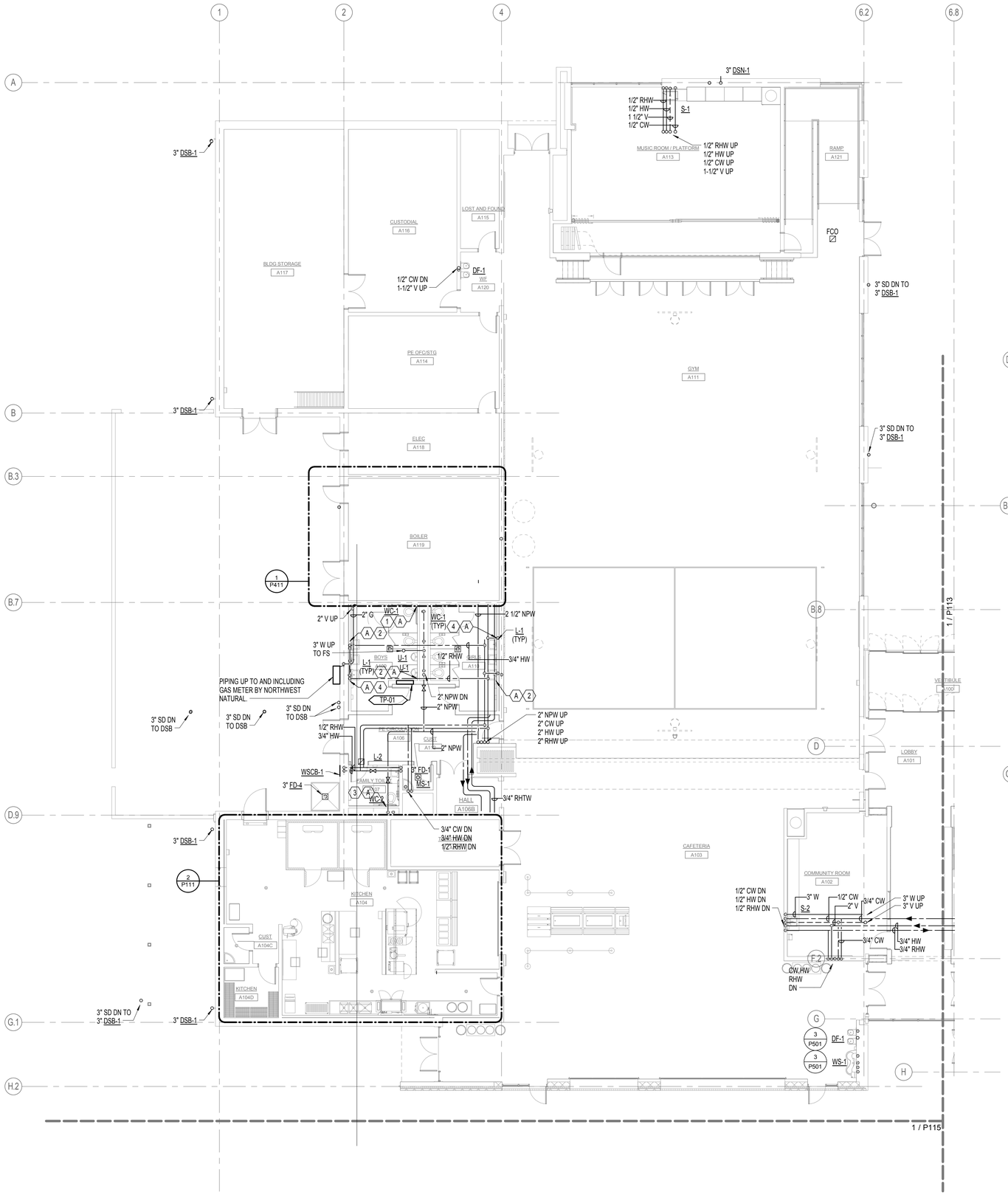

1 SECTOR A PLUMBING PLAN - FIRST FLOOR
1/8" = 1'-0"

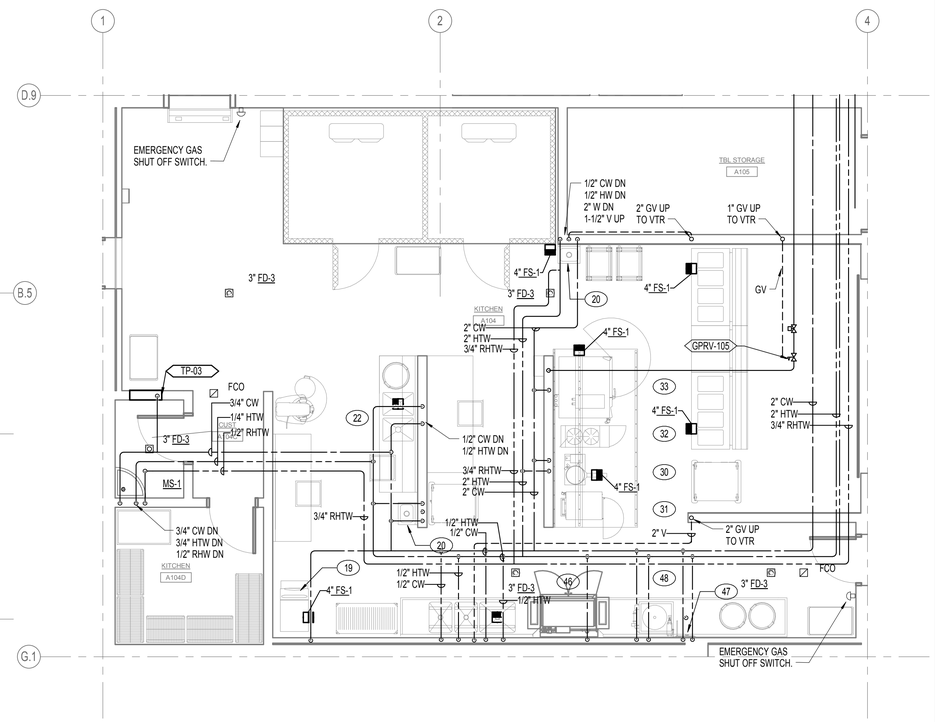

2 ENLARGED KITCHEN PLAN
1/4" = 1'-0"

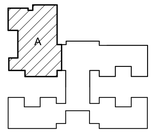

PIVOT ARCHITECTURE

REGISTERED PROFESSIONAL ENGINEER 18329PE NICHOLAS P. COLLINGS JR. 10-23-2014 EXPIRES 12-31-15

PAE
Portland I San Francisco I Seattle
pae-engineers.com

HOWARD RECONCILED SET
EUGENE SCHOOL DISTRICT
700 HOWARD AVE, EUGENE, OREGON 97404
HOWARD ELEMENTARY SCHOOL

SECTOR A PLUMBING PLAN - FIRST FLOOR

PROJECT #	1336
ISSUE DATE:	10/28/2014
DRAWN:	T.K.
CHECKED:	CJB

REVISIONS

P111

PRINTED ON: 10/23/2014 3:30:58 PM FROM FILE: C:\Revit Local Files\13-1532_HES MEP14\13-1532_HES MEP14_stacy.hansen.rvt

© 2014 PIVOT ARCHITECTURE

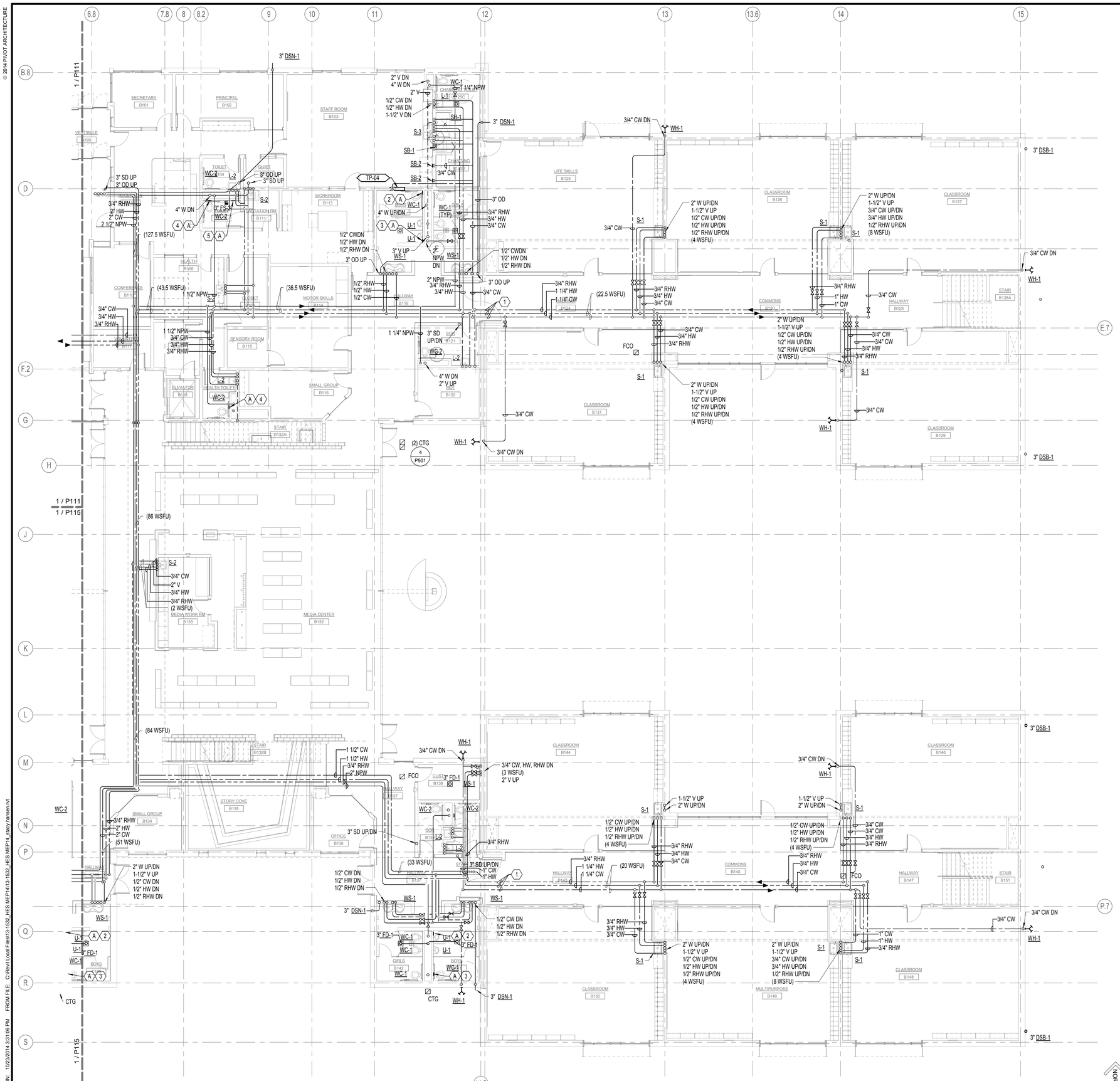

1 SECTOR B PLUMBING PLAN - FIRST FLOOR
1/8" = 1'-0"

GENERAL NOTES:

A. IT SHALL BE THE RESPONSIBILITY OF THIS CONTRACTOR TO CORDINATE THE WORK WITH THAT OF ALL OTHER TRADES, INCLUDING BUT NOT LIMITED TO: ELECTRICAL, SPRINKLER, HVAC, STRUCTURAL AND GENERAL ARCHITECTURE.

B. HOT WATER RECIRCULATION LINE TO BE ROUTED WITHIN 3' OF FIXTURE.

NOTES:

1. PROVIDE EXPANSION JOINT/SEISMIC CONNECTOR AT PIPING CROSSING EXPANSION JOINTS. ALLOW FOR 6" OF THERMAL EXPANSION. REFER TO STRUCTURAL FOR SPECIFIC LOCATIONS OF EXPANSION JOINTS.

2. PROVIDE WATER HAMMER ARRESTER BEHIND ACCESS PANEL. COORDINATE LOCATION WITH ARCHITECT.

3.PROVIDE SHUT OFF VALVESBEHIND ACCESS PANEL. COORDINATE LOCATION WITH ARCHITECT.

4. PROVIDE SHUT OFF VALVES AND WATER HAMMER ARRESTER BEHIND ACCESS PANEL. COORDINATE LOCATION WITH ARCHITECT.

5. PROVIDE HUB DRAIN BEHIND ACCESS PANEL. COORDINATE ACCESS PANEL SIZE WITH ARCHITECT.

PIVOT ARCHITECTURE

REGISTERED PROFESSIONAL ENGINEER 18329PE NICHOLAS P. COLLINS JR. 10-23-2014 EXPIRES 12-31-15

PAE
Portland | San Francisco | Seattle
pae-engineers.com

HOWARD RECONCILED SET
EUGENE SCHOOL DISTRICT
700 HOWARD AVE, EUGENE, OREGON 97404
HOWARD ELEMENTARY SCHOOL

SECTOR B PLUMBING PLAN - FIRST FLOOR

PROJECT #	1336
ISSUE DATE:	10/28/2014
DRAWN:	TJL
CHECKED:	CJB
REVISIONS:	

P113

PRINTED ON: 10/23/2014 3:31:06 PM FROM FILE: C:\Revit Local Files\13-1532_HES MEP\413-1532_HES MEP14_stacy.hansen.rvt

© 2014 PIVOT ARCHITECTURE

GENERAL NOTES:

A. IT SHALL BE THE RESPONSIBILITY OF THIS CONTRACTOR TO CORDINATE THE WORK WITH THAT OF ALL OTHER TRADES, INCLUDING BUT NOT LIMITED TO: ELECTRICAL, SPRINKLER, HVAC, STRUCTURAL AND GENERAL ARCHITECTURE.

B. REFER TO RISER DIAGRAM FOR COMPLETE SIZES, SHUT-OFF VALVE AND WATER HAMMER ARRESTER LOCATIONS.

NOTES:

1. PROVIDE EXPANSION JOINT/SEISMIC CONNECTOR AT PIPING CROSSING EXPANSION JOINTS. ALLOW FOR 6" OF THERMAL EXPANSION. REFER TO STRUCTURAL FOR SPECIFIC LOCATIONS OF EXPANSION JOINTS.

2. PROVIDE WATER HAMMER ARRESTER BEHIND ACCESS PANEL. COORDINATE LOCATION WITH ARCHITECT.

3.PROVIDE SHUT OFF VALVESBEHIND ACCESS PANEL. COORDINATE LOCATION WITH ARCHITECT.

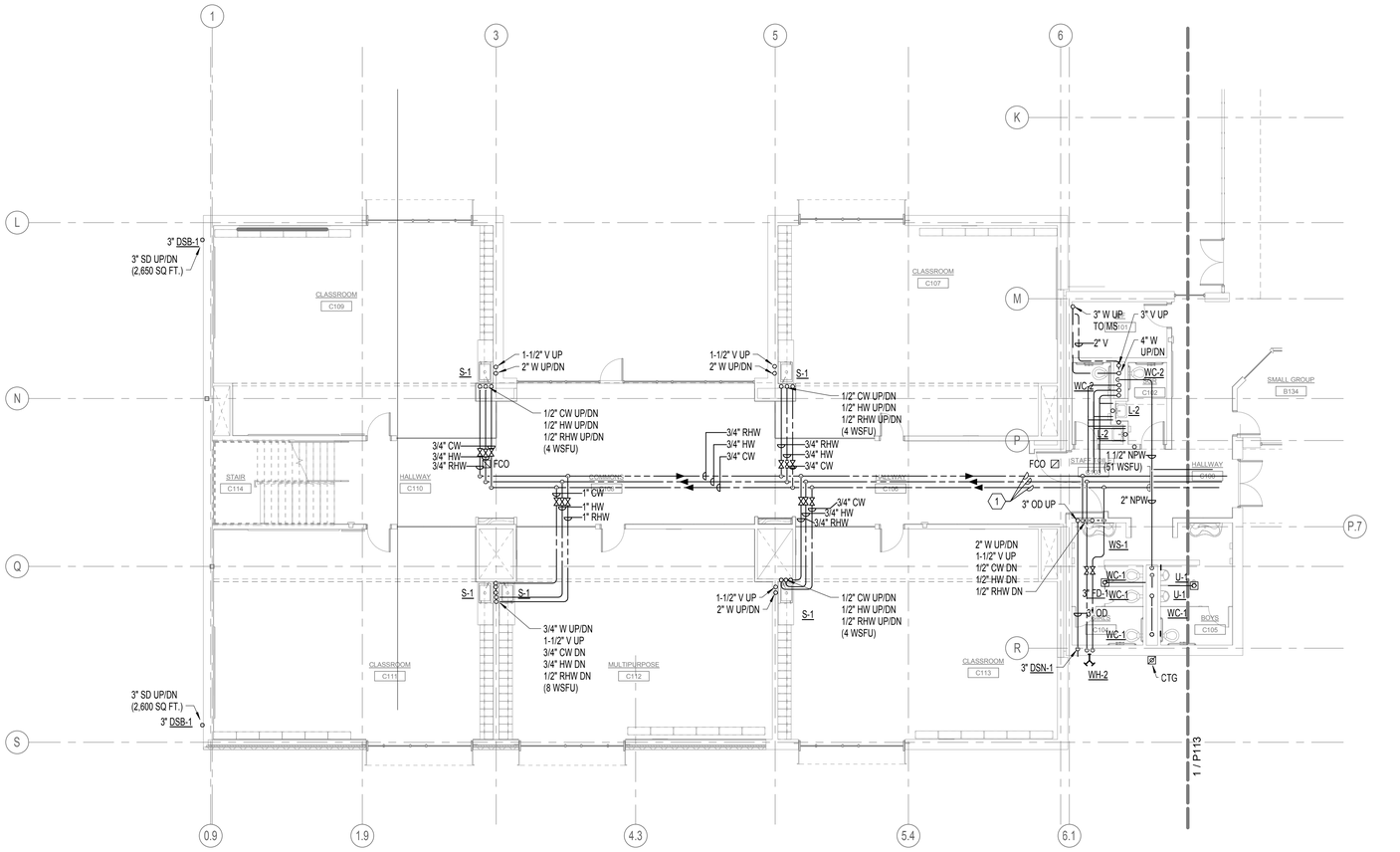

1 SECTOR C PLUMBING PLAN - FIRST FLOOR
1/8" = 1'-0"

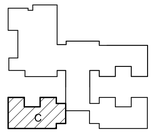

PIVOT ARCHITECTURE

REGISTERED PROFESSIONAL ENGINEER
18329PE
NICHOLAS P. COLLINS, JR.
10-23-2014
EXPIRES 12-31-15

PAE
Portland | San Francisco | Seattle
pae-engineers.com

HOWARD RECONCILED SET
EUGENE SCHOOL DISTRICT
700 HOWARD AVE, EUGENE, OREGON 97404
HOWARD ELEMENTARY SCHOOL

SECTOR C PLUMBING PLAN - FIRST FLOOR

PROJECT #:	1.135
ISSUE DATE:	10/28/2014
DRAWN:	TJC
CHECKED:	CJB

REVISIONS:

P115

PRINTED ON: 10/23/2014 3:31:11 PM FROM FILE: C:\Revit Local Files\13-1532_HES MEP14\13-1532_HES MEP14_stacy.hansen.rvt

© 2014 PIVOT ARCHITECTURE

PRINTED ON: 10/23/2014 3:31:14 PM FROM FILE: C:\Revit Local Files\13-1532_HES MEP\413-1532_HES MEP14_stacy.hansen.rvt

GENERAL NOTES:

A. IT SHALL BE THE RESPONSIBILITY OF THIS CONTRACTOR TO CORDINATE THE WORK WITH THAT OF ALL OTHER TRADES, INCLUDING BUT NOT LIMITED TO: ELECTRICAL, SPRINKLER, HVAC, STRUCTURAL AND GENERAL ARCHITECTURE.

B. REFER TO RISER DIAGRAM FOR COMPLETE SIZES, SHUT-OFF VALVE AND WATER HAMMER ARRESTER LOCATIONS.

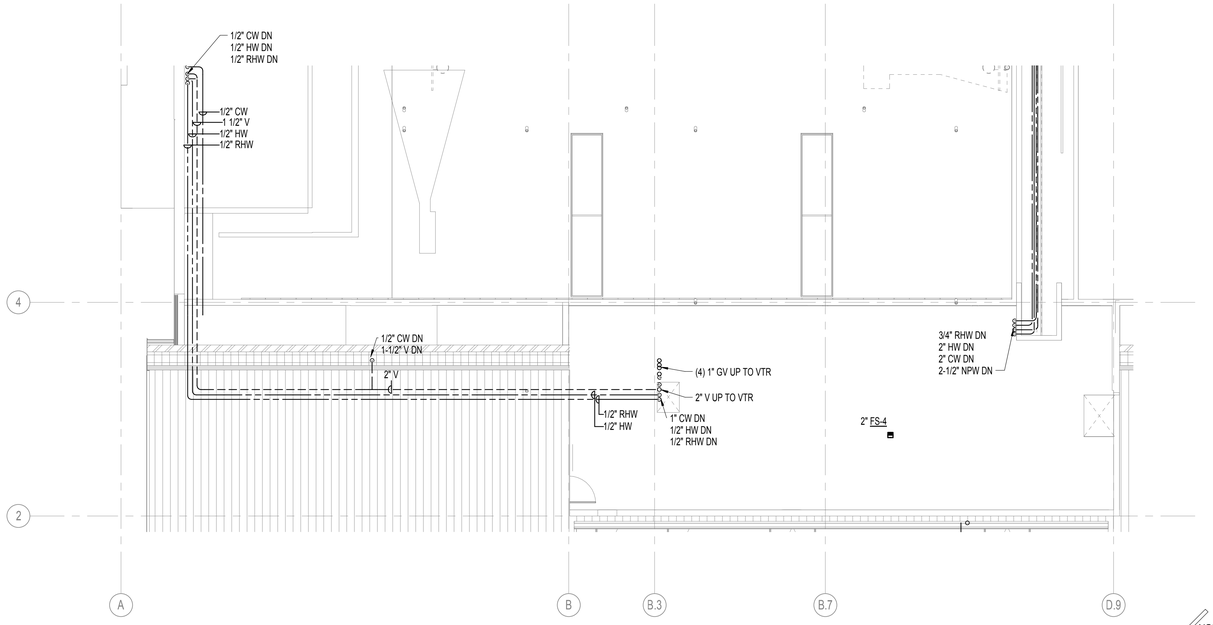

1 SECTOR A PARTIAL PLUMBING PLANS - SECOND FLOOR
1/8" = 1'-0"

NORTH

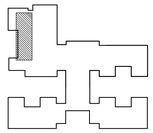

PIVOT ARCHITECTURE

REGISTERED PROFESSIONAL ENGINEER 18329PE
NICHOLAS P. COLLINS JR.
10-23-2014
EXPIRES 12-31-15

PAE
Portland | San Francisco | Seattle
pae-engineers.com

HOWARD RECONCILED SET
EUGENE SCHOOL DISTRICT
700 HOWARD AVE, EUGENE, OREGON 97404
HOWARD ELEMENTARY SCHOOL

SECTOR A PARTIAL PLUMBING PLANS

PROJECT #	1336
ISSUE DATE:	10/28/2014
DRAWN:	TJL
CHECKED:	CJB
REVISIONS:	

P121

© 2014 PIVOT ARCHITECTURE

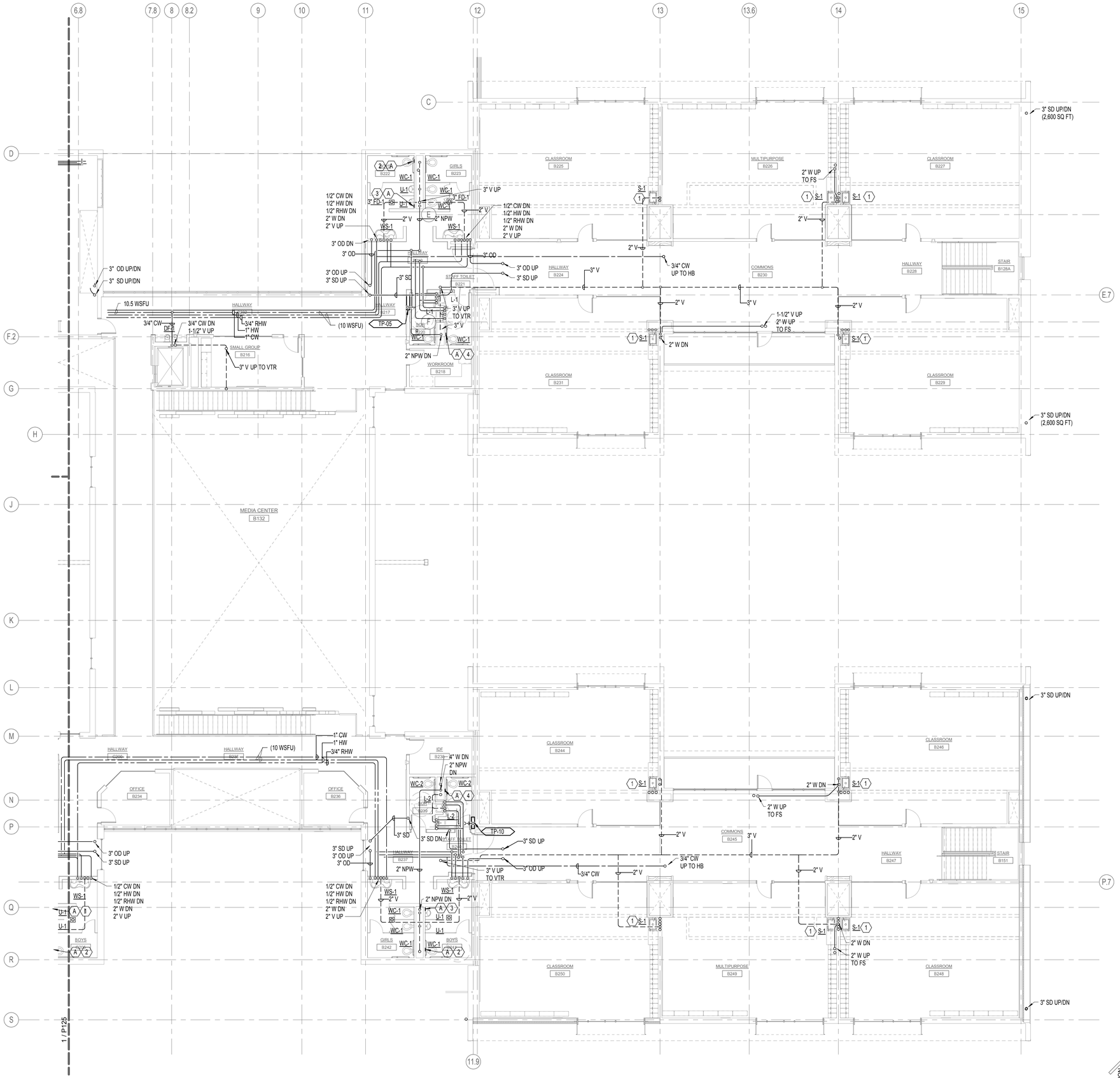

1 SECTOR B PLUMBING PLAN - SECOND FLOOR

1/8" = 1'-0"

GENERAL NOTES:

A. IT SHALL BE THE RESPONSIBILITY OF THIS CONTRACTOR TO CORDINATE THE WORK WITH THAT OF ALL OTHER TRADES, INCLUDING BUT NOT LIMITED TO: ELECTRICAL, SPRINKLER, HVAC, STRUCTURAL AND GENERAL ARCHITECTURE.

B. REFER TO RISER DIAGRAM FOR COMPLETE SIZES, SHUT-OFF VALVE AND WATER HAMMER ARRESTER LOCATIONS.

NOTES:

1. SINK SERVED FROM BELOW.

2. PROVIDE WATER HAMMER ARRESTER BEHIND ACCESS PANEL. COORDINATE LOCATION WITH ARCHITECT.

3.PROVIDE SHUT OFF VALVESBEHIND ACCESS PANEL. COORDINATE LOCATION WITH ARCHITECT.

4. PROVIDE SHUT OFF VALVES AND WATER HAMMER ARRESTER BEHIND ACCESS PANEL. COORDINATE LOCATION WITH ARCHITECT.

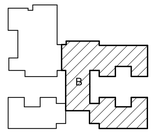

PIVOT ARCHITECTURE

REGISTERED PROFESSIONAL ENGINEER 18329PE OREGON JAN 19 2010 THOMAS P. COLLINS JR.

EXPIRES: 12-31-15

10-23-2014

PAE

Portland | San Francisco | Seattle
pae-engineers.com

HOWARD RECONCILED SET

EUGENE SCHOOL DISTRICT
700 HOWARD AVE, EUGENE, OREGON 97404

HOWARD ELEMENTARY SCHOOL

SECTOR B PLUMBING PLAN - SECOND FLOOR

PROJECT #	1336
ISSUE DATE:	10/28/2014
DRAWN:	TJL
CHECKED:	CJB

REVISIONS

P123

PRINTED ON: 10/23/2014 3:31:20 PM FROM FILE: C:\Revit Local Files\13-1532_HES MEP\413-1532_HES MEP14_stacy.hansen.rvt

© 2014 PIVOT ARCHITECTURE

GENERAL NOTES:

A. IT SHALL BE THE RESPONSIBILITY OF THIS CONTRACTOR TO CORDINATE THE WORK WITH THAT OF ALL OTHER TRADES, INCLUDING BUT NOT LIMITED TO: ELECTRICAL, SPRINKLER, HVAC, STRUCTURAL AND GENERAL ARCHITECTURE.

B. REFER TO RISER DIAGRAM FOR COMPLETE SIZES. SHUT-OFF VALVE AND WATER HAMMER ARRESTER LOCATIONS.

NOTES:

1.PROVIDE SHUT OFF VALVESBEHIND ACCESS PANEL. COORDINATE LOCATION WITH ARCHITECT.

2. PROVIDE WATER HAMMER ARRESTER BEHIND ACCESS PANEL. COORDINATE LOCATION WITH ARCHITECT.

3. SINK SERVED FROM BELOW.

4. PROVIDE SHUT OFF VALVES AND WATER HAMMER ARRESTER BEHIND ACCESS PANEL. COORDINATE LOCATION WITH ARCHITECT.

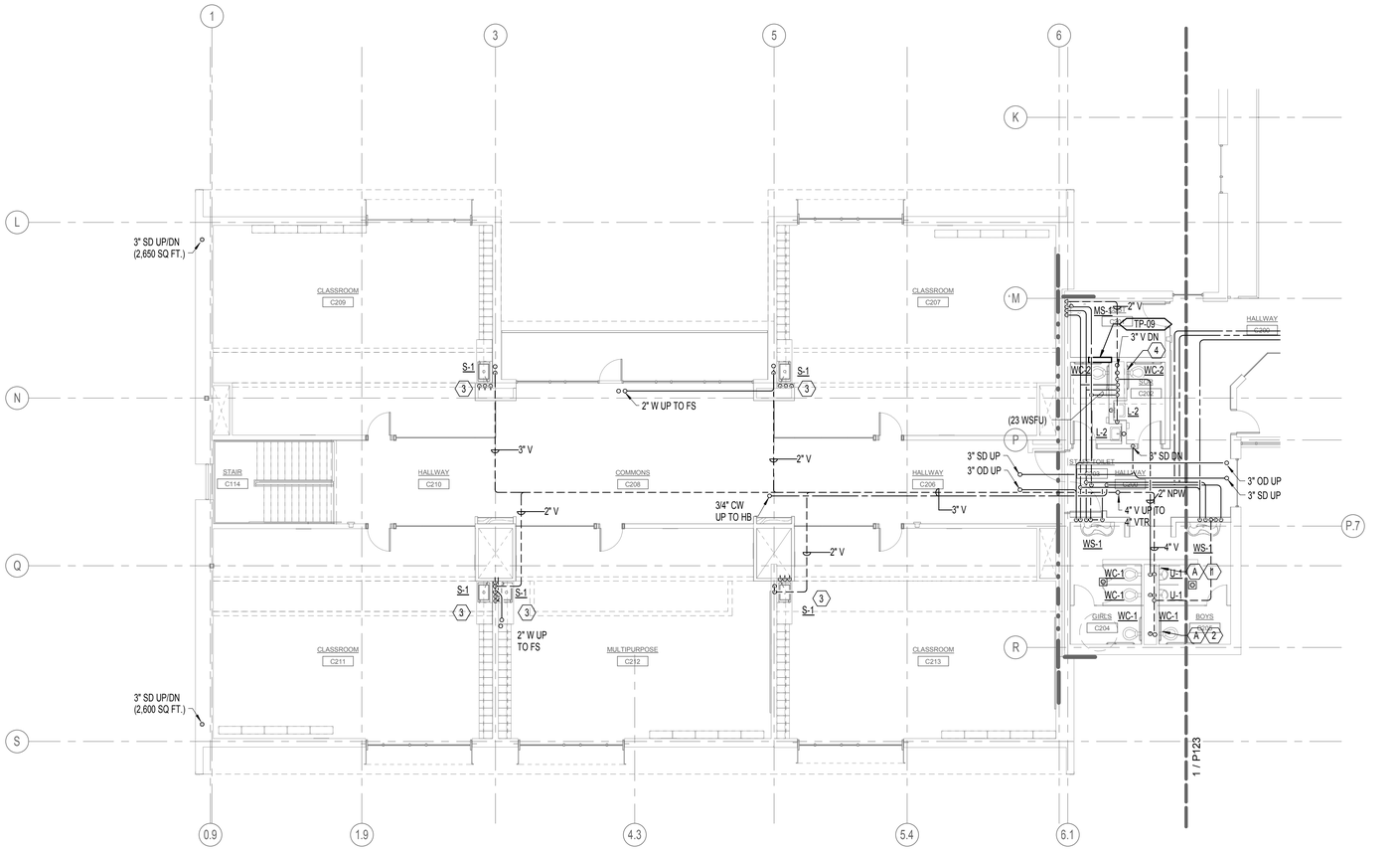

1 SECTOR C PLUMBING PLAN - SECOND FLOOR
1/8" = 1'-0"

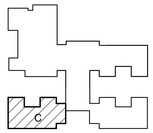

PIVOT ARCHITECTURE

REGISTERED PROFESSIONAL ENGINEER
18329PE
OREGON
NOVEMBER 19, 1985
ANDREAS P. COLLINOS JR.
10-23-2014
EXPIRES 12-31-15

PAE
Portland | San Francisco | Seattle
pae-engineers.com

HOWARD RECONCILED SET
EUGENE SCHOOL DISTRICT
700 HOWARD AVE, EUGENE, OREGON 97404
HOWARD ELEMENTARY SCHOOL

SECTOR C PLUMBING PLAN - SECOND FLOOR

PROJECT #:	13365
ISSUE DATE:	10/28/2014
DRAWN:	TJL
CHECKED:	CJB
REVISIONS:	

P125

PRINTED ON: 10/23/2014 3:31:24 PM FROM FILE: C:\Revit Local Files\13-1532_HES MEP14\13-1532_HES MEP14_stacy.hansen.rvt

© 2014 PIVOT ARCHITECTURE

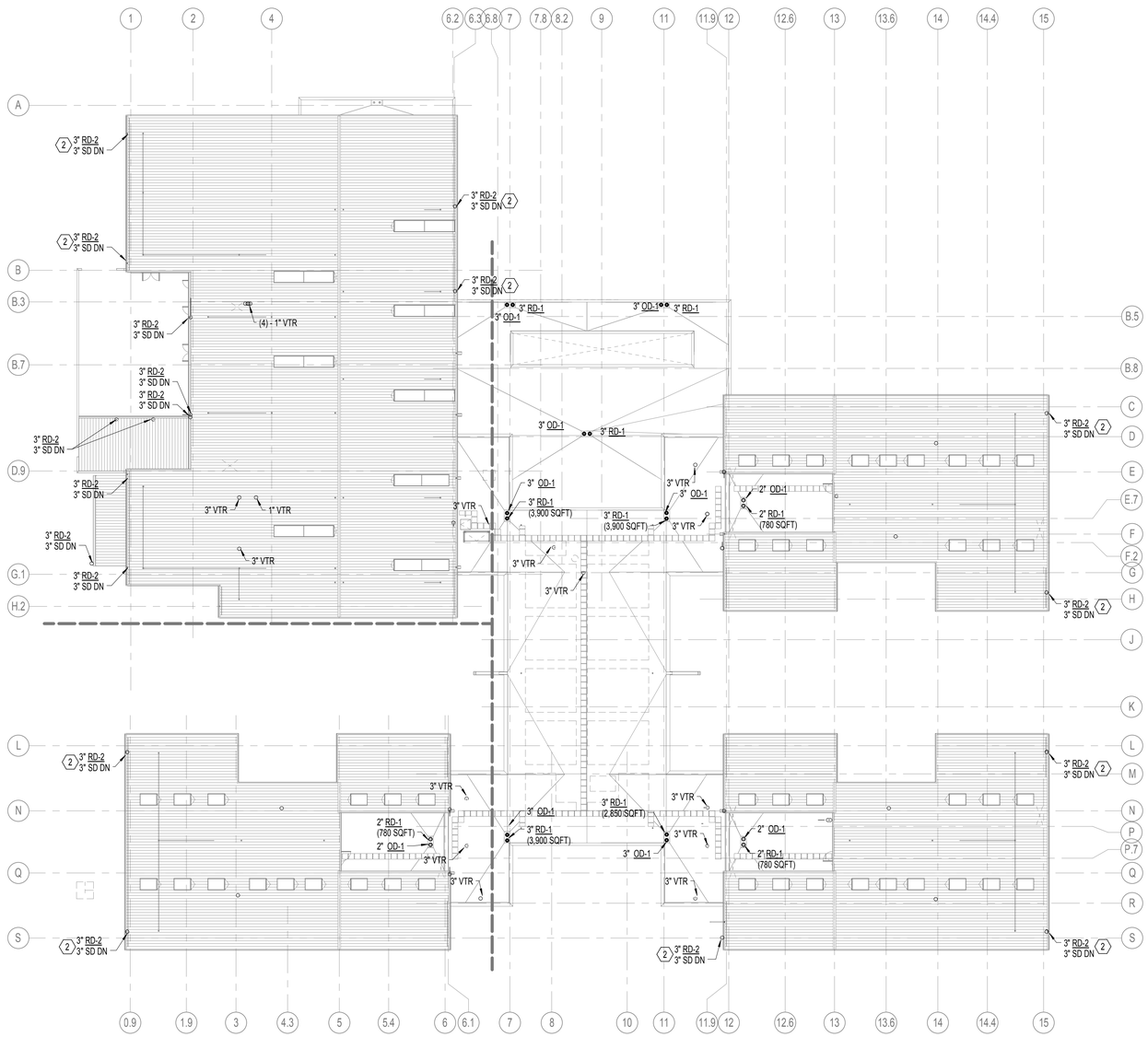

NOTES:

1. DOWNSPOUT FROM UPPER ROOF TO LOWER ROOF. PROVIDE SPLASH BLOCK.

2. PROVIDE 316L STAINLESS STEEL DOWNSPOUTS FROM GUTTER OUTLET TO STORM DRAINAGE SYSTEM. DOWNSPOUTS TO HAVE BRUSHED FINSIH WITH WELDS GROUND SMOOTH AND BLENDED WITH FINISH.

1 ROOF PLAN - PLUMBING
1" = 20'-0"

NORTH

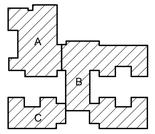

PIVOT ARCHITECTURE

REGISTERED PROFESSIONAL ENGINEER
18329PE
NICHOLAS P. COLLINGS JR.
10-23-2014
EXPIRES 12-31-15

PAE
Portland | San Francisco | Seattle
pae-engineers.com

HOWARD RECONCILED SET
EUGENE SCHOOL DISTRICT
700 HOWARD AVE, EUGENE, OREGON 97404
HOWARD ELEMENTARY SCHOOL

OVERALL ROOF PLAN - PLUMBING

PROJECT #	1336
ISSUE DATE:	10/28/2014
DRAWN:	TJL
CHECKED:	CJB
REVISIONS:	

P130

PRINTED ON: 10/23/2014 3:31:31 PM FROM FILE: C:\Revit Local Files\13-1532_HES MEP14\13-1532_HES MEP14_sibcy.hansen.rvt

© 2014 PIVOT ARCHITECTURE

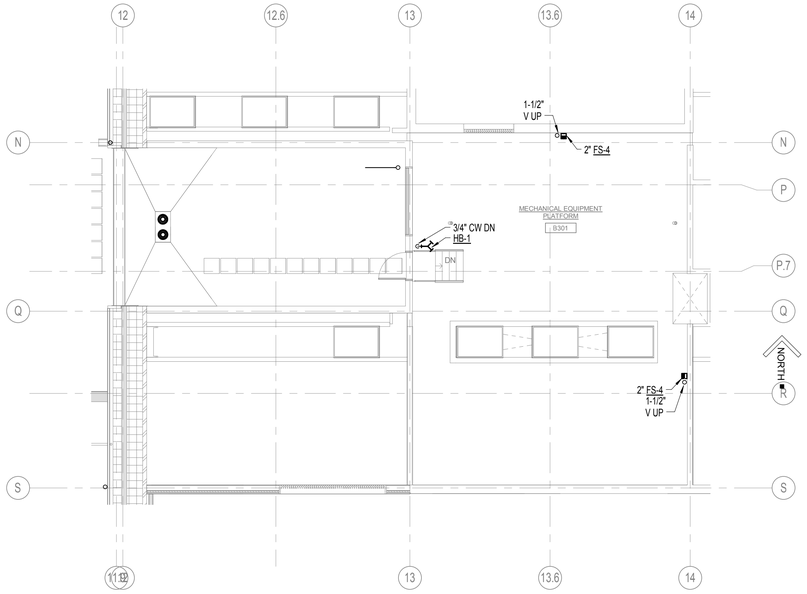

3 SECTOR B3 PARTIAL PLAN - PLUMBING
1/8" = 1'-0"

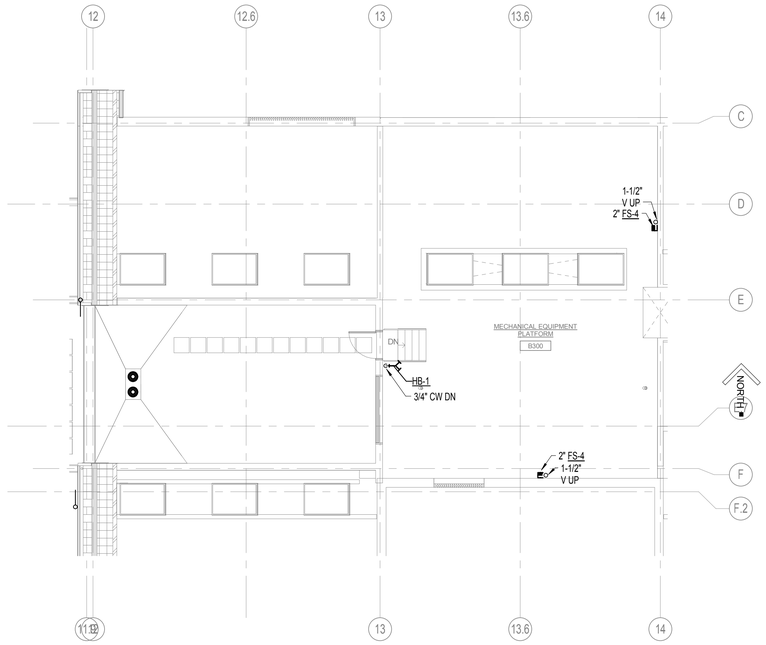

2 SECTOR B2 PARTIAL PLAN - PLUMBING
1/8" = 1'-0"

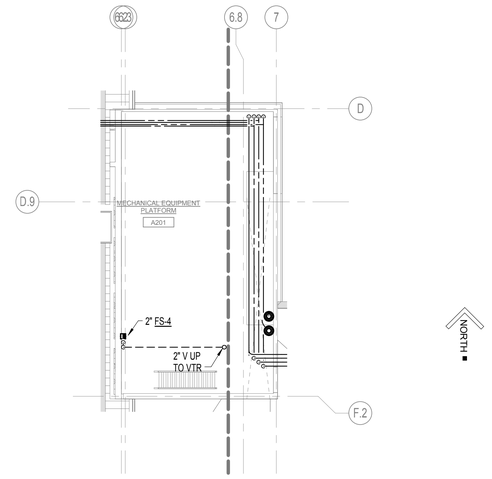

1 SECTOR B1 PARTIAL PLAN - PLUMBING
1/8" = 1'-0"

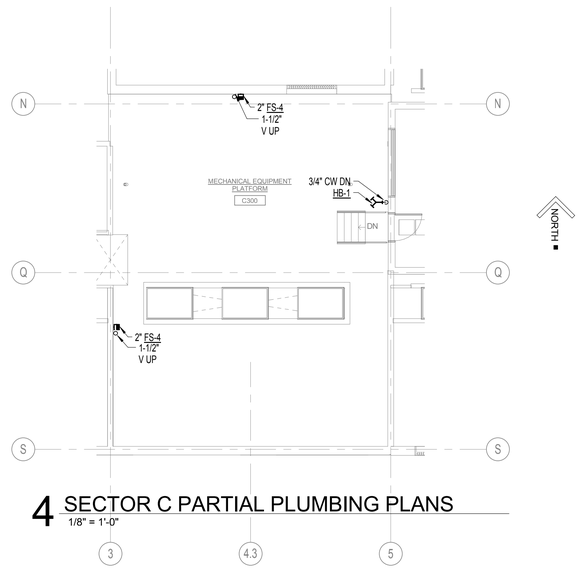

4 SECTOR C PARTIAL PLUMBING PLANS
1/8" = 1'-0"

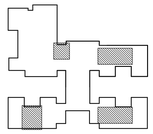

PIVOT ARCHITECTURE

REGISTERED PROFESSIONAL ENGINEER
18329PE
NICHOLAS P. COLLINGS JR.
10-23-2014
EXPIRES 12-31-15

PAE
Portland | San Francisco | Seattle
pae-engineers.com

HOWARD RECONCILED SET
EUGENE SCHOOL DISTRICT
700 HOWARD AVE, EUGENE, OREGON 97404
4J
HOWARD ELEMENTARY SCHOOL

SECTOR B PARTIALS PLUMBING PLANS

PROJECT #	1336
ISSUE DATE:	10/28/2014
DRAWN:	T.K.
CHECKED:	CJB

REVISIONS:

P131

PRINTED ON: 10/23/2014 3:31:36 PM FROM FILE: C:\Revit Local Files\13-1532_HES MEP\13-1532_HES MEP14_stacy.hansen.rvt

© 2014 PIVOT ARCHITECTURE

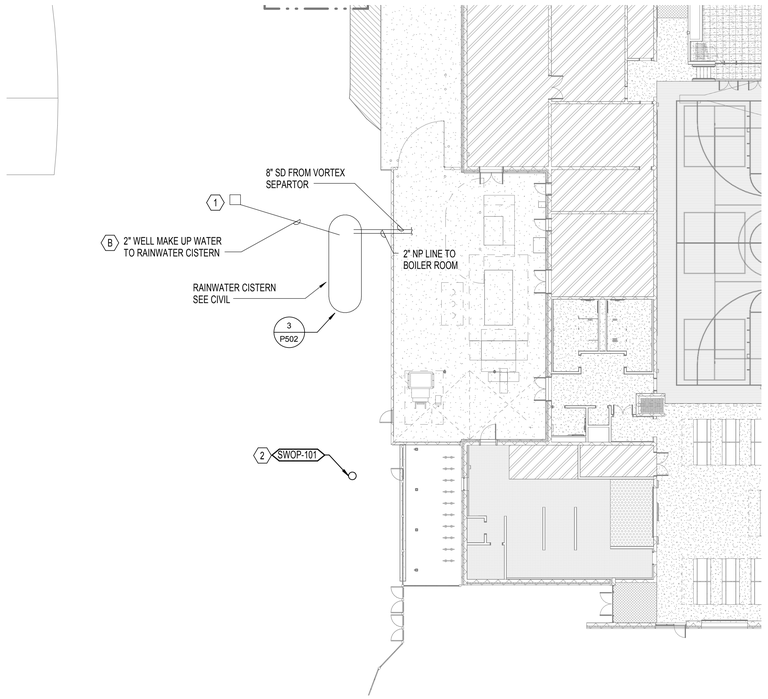

NOTES:

1. IRRIGATION SOLENOID ZONE VALVE. ACTIVATED BY DDC SYSTEM.
2. DUPLEX PUMP LOCATED IN MANHOLE. COORDINATE WITH CIVIL ENGINEER.

2 SITE PLAN - PLUMBING
1/16" = 1'-0"

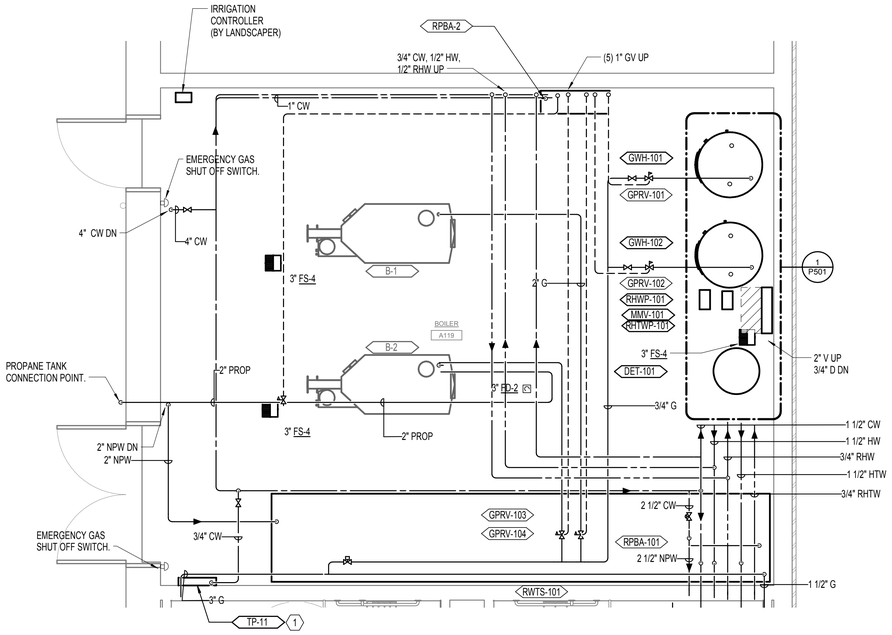

GENERAL NOTES:

A. MECHANICAL EQUIPMENT SHOWN FOR REFERENCE ONLY. REFER TO MECHANICAL SHEETS FOR FURTHER DETAIL.

B. FIRE PROTECTION EQUIPMENT SHOW FOR REFERENCE ONLY REFER TO FIRE PROTECTION SHEETS FOR FURTHER DETAIL.

NOTES:

1. ROUTE TRAP PRIMER LINES TO DRAINS LOCATED IN UTILITY YARD. REFER TO CIVIL FOR EXACT LOCATIONS.

1 ENLARGED BOILER ROOM PLAN - PLUMBING
3/8" = 1'-0"

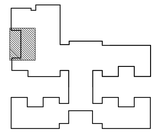

PIVOT ARCHITECTURE

REGISTERED PROFESSIONAL ENGINEER 18329PE OREGON NICHOLAS P. COLLINGS JR. 10-23-2014 EXPIRES 12-31-15

PAE
Portland | San Francisco | Seattle
pae-engineers.com

HOWARD RECONCILED SET
EUGENE SCHOOL DISTRICT
700 HOWARD AVE, EUGENE, OREGON 97404
HOWARD ELEMENTARY SCHOOL

SECTOR A PARTIAL PLUMBING PLAN - BOILER ROOM AND YARD

PROJECT #	1336
ISSUE DATE:	10/28/2014
DRAWN:	T.E.
CHECKED:	C.JB

REVISIONS

P411

PRINTED ON: 10/23/2014 3:31:41 PM FROM FILE: C:\Revit Local Files\13-1532_HES MEP14\13-1532_HES MEP14_stacy.hansen.rvt

© 2014 PIVOT ARCHITECTURE

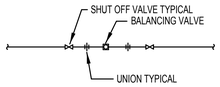

5 BALANCING VALVE DETAIL
NONE

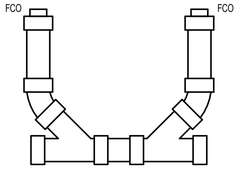

4 BI-DIRECTIONAL CLEANOUT DETAIL
NONE

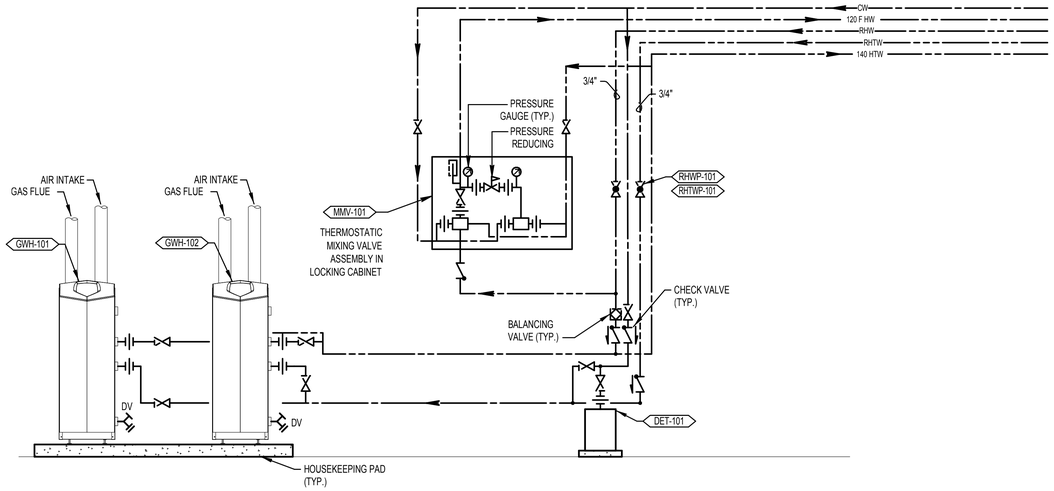

GENERAL NOTES:

A. PROVIDE PIPING CONFIGURATION AND PIPE SIZE BETWEEN SYSTEM COMPONENTS IN ACCORDANCE WITH MANUFACTURERS INSTALLATION GUIDELINES.

1 WATER HEATER DETAIL
NONE

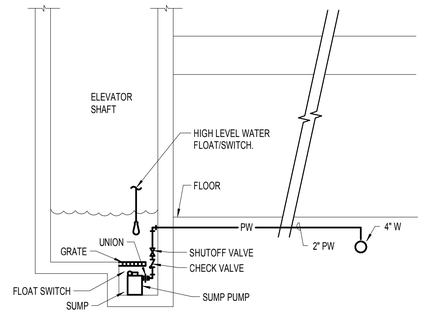

NOTES:

1 PROVIDE LOCAL DISCONNECT FOR PUMP WITHIN ELEVATOR SHAFT. SEE DIV.16 FOR REQUIREMENTS.

2 SUMP PUMP DETAIL
NONE

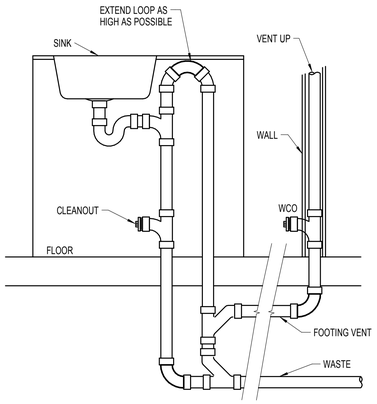

3 ISLAND VENT DETAIL
NONE

PIVOT ARCHITECTURE

REGISTERED PROFESSIONAL ENGINEER 18329PE ANDREAS P. COLLINS JR. 10-23-2014 EXPIRES 12-31-15

PAE
Portland | San Francisco | Seattle
pae-engineers.com

HOWARD RECONCILED SET
4J
EUGENE SCHOOL DISTRICT
700 HOWARD AVE, EUGENE, OREGON 97404
HOWARD ELEMENTARY SCHOOL

DETAILS - PLUMBING

PROJECT #	1.530
ISSUE DATE:	10/28/2014
DRAWN:	TJL
CHECKED:	CJB

REVISIONS:

P501

PRINTED ON: 10/23/2014 3:31:43 PM FROM FILE: C:\Revit Local Files\13-1532_HES MEP\4\13-1532_HES MEP14_stacy.hansen.rvt

© 2014 PIVOT ARCHITECTURE

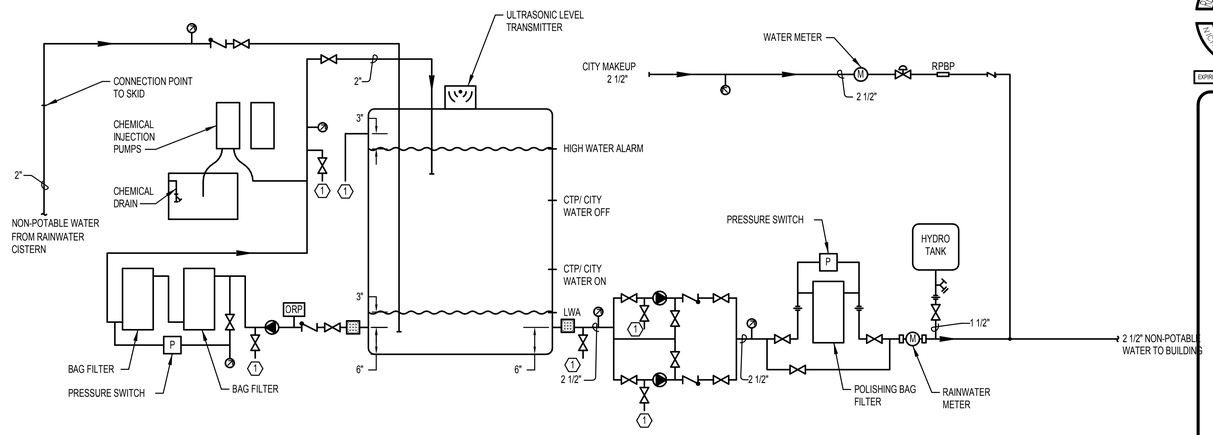

GENERAL NOTES:

A. LOCATE RAINWATER TREATMENT SKID ON TOP OF HOUSEKEEPING PAD.

NOTES:

1. ROUTE TO FLOOR SINK. DRAIN INDIRECTLY.

1 RAINWATER TREATMENT SKID PLUMBING DETAIL

NONE

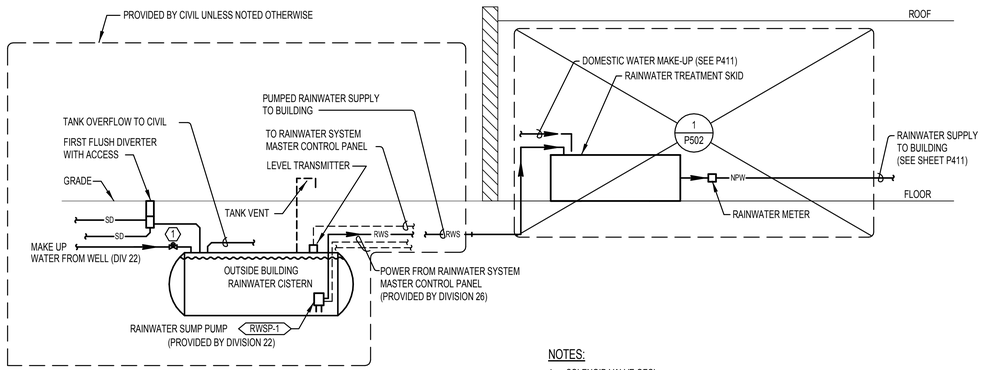

NOTES:

1. SOLENOID VALVE OFCI

2 RAINWATER SYSTEM DIAGRAM

NONE

PAE
Portland | San Francisco | Seattle
pae-engineers.com

REGISTERED PROFESSIONAL ENGINEER 18329PE
ANDREAS P. COLLINS JR.
10-23-2014
EXPIRES: 12-31-15

PIVOT ARCHITECTURE

HOWARD RECONCILED SET
EUGENE SCHOOL DISTRICT
700 HOWARD AVE, EUGENE, OREGON 97404
HOWARD ELEMENTARY SCHOOL

DETAILS - PLUMBING

PROJECT #	1336
ISSUE DATE:	10/28/2014
DRAWN:	TJL
CHECKED:	CJB
REVISIONS:	

P502

PRINTED ON: 10/23/2014 3:31:45 PM FROM FILE: C:\Revit Local Files\13-1532_HES MEP\413-1532_HES MEP14_stacy.hansen.rvt

© 2014 PIVOT ARCHITECTURE

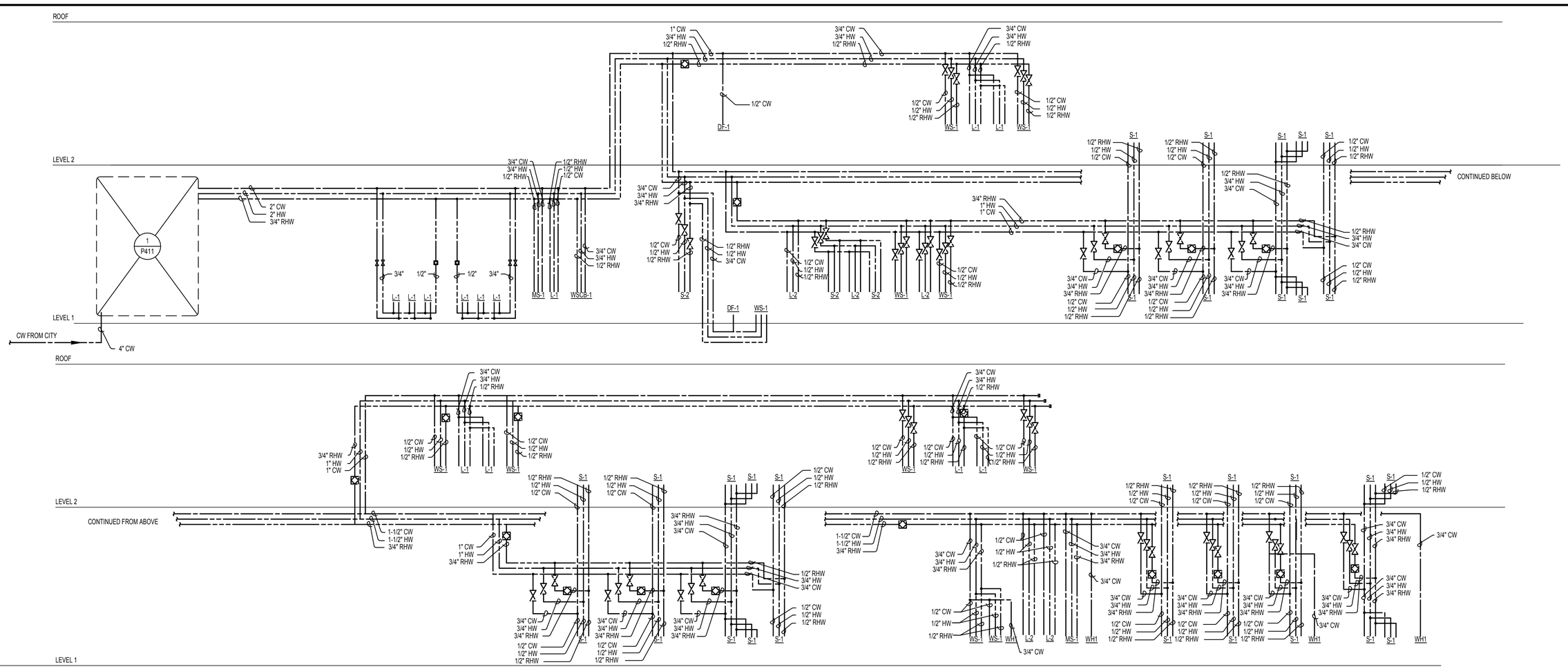

1 DOMESTIC WATER RISER DIAGRAM

NONE

GENERAL NOTES:

1. SET ALL BALANCE VALVES TO 0.5 GPM UNLESS NOTED.
2. REFER TO DETAIL 5/P501 FOR BALANCE VALVE DETAIL.

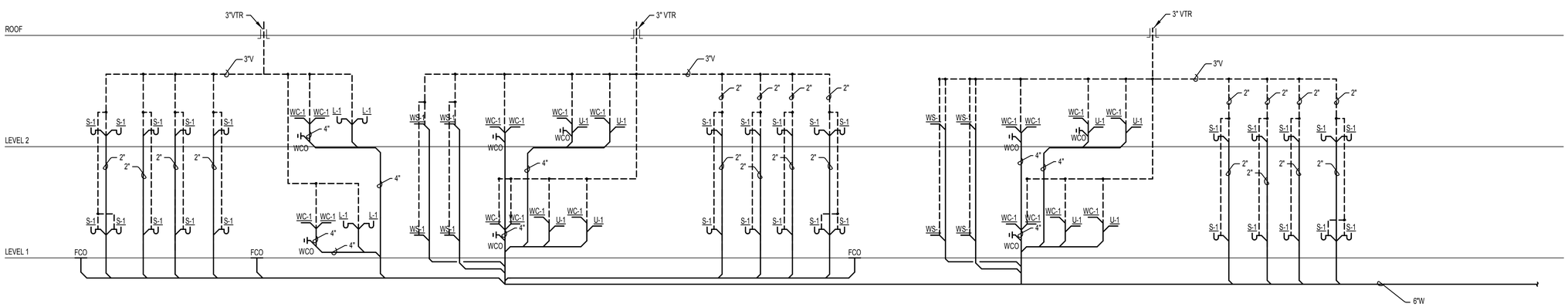

2 WASTE AND VENT RISER DIAGRAM - RESTROOMS & CLASSROOMS CORE

NONE

PIVOT ARCHITECTURE

REGISTERED PROFESSIONAL ENGINEER 18329PE THOMAS P. COLLINS JR. 10-23-2014 EXPIRES 12-31-15

PAE
Portland | San Francisco | Seattle
pae-engineers.com

HOWARD RECONCILED SET
EUGENE SCHOOL DISTRICT
700 HOWARD AVE, EUGENE, OREGON 97404
HOWARD ELEMENTARY SCHOOL

RISER DIAGRAMS - PLUMBING

PROJECT #	1336
ISSUE DATE:	10/28/2014
DRAWN:	T.Z.
CHECKED:	CJB
REVISIONS:	

P601

PRINTED ON: 10/23/2014 3:31:47 PM FROM FILE: C:\Revit Local Files\13-1532_HES MEP\413-1532_HES MEP14_siboy.hansen.rvt

© 2014 PIVOT ARCHITECTURE

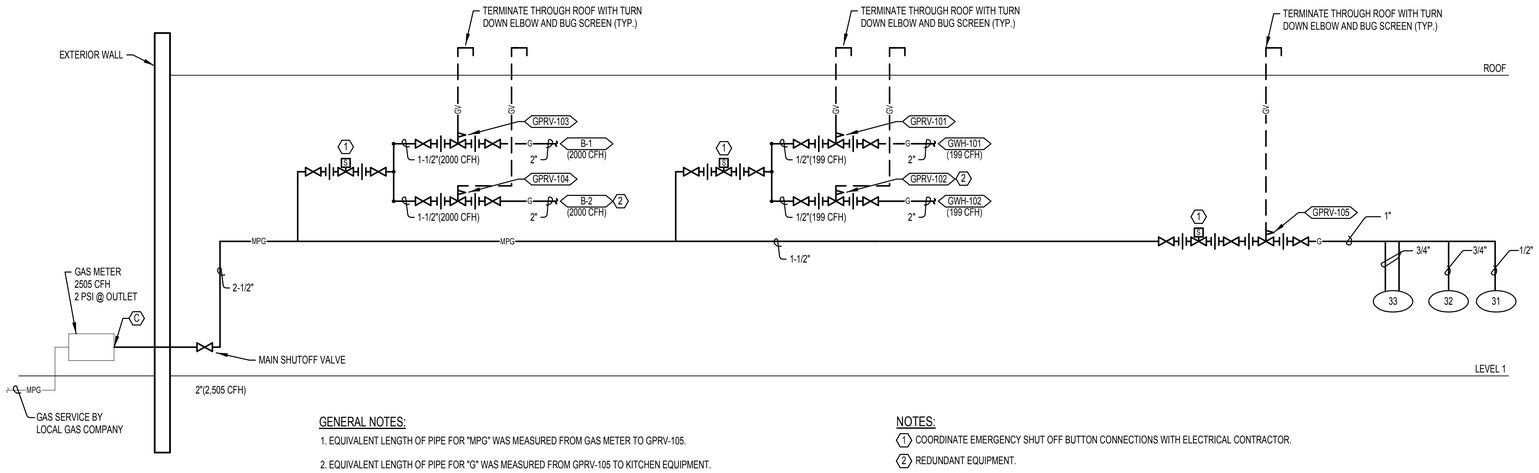

GENERAL NOTES:

1. EQUIVALENT LENGTH OF PIPE FOR "MPG" WAS MEASURED FROM GAS METER TO GPRV-105.
2. EQUIVALENT LENGTH OF PIPE FOR "G" WAS MEASURED FROM GPRV-105 TO KITCHEN EQUIPMENT.

NOTES:

1. COORDINATE EMERGENCY SHUT OFF BUTTON CONNECTIONS WITH ELECTRICAL CONTRACTOR.
2. REDUNDANT EQUIPMENT.

1 GAS RISER DIAGRAM
NONE

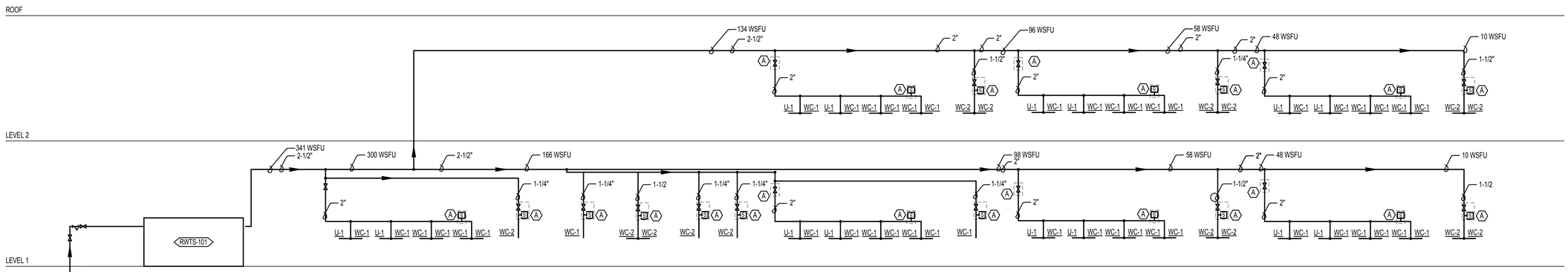

GENERAL NOTES:

1. SIZE SHOCK ARRESTORS IN ACCORDANCE WITH PDI STANDARDS.

2 NON-POTABLE WATER RISER DIAGRAM
NONE

PIVOT ARCHITECTURE

REGISTERED PROFESSIONAL ENGINEER 18329PE NICHOLAS P. COLLINS JR. 10-23-2014 EXPIRES 12-31-15

PAE
Portland | San Francisco | Seattle
pae-engineers.com

HOWARD RECONCILED SET
4J EUGENE SCHOOL DISTRICT
700 HOWARD AVE, EUGENE, OREGON 97404
HOWARD ELEMENTARY SCHOOL

RISER DIAGRAMS - PLUMBING

PROJECT #	1336
ISSUE DATE:	10/28/2014
DRAWN:	T.K.
CHECKED:	NPC
REVISIONS:	

P602

PRINTED ON: 10/23/2014 3:31:49 PM FROM FILE: C:\Revit Local Files\13-1532_HES MEP14\13-1532_HES MEP14_stacy.hansen.rvt

© 2014 PIVOT ARCHITECTURE

STANDARD MECHANICAL ABBREVIATIONS

AF	AIRFOIL	IE	INVERT ELEVATION
AFF	ABOVE FINISHED FLOOR	IN	INCH(ES)
AHP	APPARATUS HOUSING PLENUM	INSUL	INSULATION
ALT	ALTERNATIVE	ISOL	ISOLAT(OR)(ION)
AL	ALUMINUM	KW	KILOWATT
APD	AIR PRESSURE DROP	KWH	KILOWATT HOUR
APPROX	APPROXIMATELY	L	LENGTH
ARCH	ARCHITECT(URAL)	LAT	LEAVING AIR TEMP
AUTO	AUTOMATIC	LB	POUND
BDD	BACKDRAFT DAMPER	LDB	LEAVING DRY BULB
BI	BACKWARD INCLINED	LF	LINEAR FEET
BLDG	BUILDING	LFT	LEAVING FLUID TEMPERATURE
BSMT	BASEMENT	LVG	LEAVING
BTU	BRITISH THERMAL UNIT	LWB	LEAVING WET BULB
BTUH	BRITISH THERMAL UNITS PER HOUR	LWT	LEAVING WATER TEMPERATURE
CFH	CUBIC FEET PER HOUR	MAX	MAXIMUM
CFM	CUBIC FEET PER MINUTE	MBH	THOUSAND BTU PER HOUR
CFS	CUBIC FEET PER SECOND	MECH	MECHANICAL
CLG	CEILING OR COOLING	MFR	MANUFACTURER
CONC	CONCRETE	MIN	MINIMUM
CONN	CONNECT(ION)	MISC	MISCELLANEOUS
CONT	CONTINUE(ED)(UATION)	MTD	MOUNTED
CL	CENTERLINE	NC	NORMALLY CLOSED
DDC	DIRECT DIGITAL CONTROL	NIC	NOT IN CONTRACT
DEFL	DEFLECTION	NO	NORMALLY OPEN
DN	DOWN	OAD	OUTSIDE AIR DAMPER
DP	DEW POINT	OC	ON CENTER DISTANCE
DWDI	DOUBLE WIDTH DOUBLE INLET	OSA	OUTSIDE AIR
DWG	DRAWING	PH	PHASE
EA	EXHAUST AIR	PP	POLYPROPYLENE
EAD	EXHAUST AIR DAMPER	PSI	POUNDS PER SQUARE INCH
EAT	ENTERING AIR TEMPERATURE	PVC	POLYVINYL CHLORIDE
EDB	ENTERING DRY BULB	PVS	PVC COATED STEEL
EFF	EFFICIENCY	R (RAD)	RADIUS
EFT	ENTERING FLUID TEMPERATURE	RA	RETURN AIR
ELEC	ELECTRIC(AL)	RAD	RETURN AIR DAMPER
ELEV	ELEVATION	REV	REVISION
ENGR	ENGINEER	RH	RELATIVE HUMIDITY
EQ	EQUAL	RPM	REVOLUTIONS PER MINUTE
EQUIP	EQUIPMENT	SA	SUPPLY AIR
ESP	EXTERNAL STATIC PRESSURE	SCFM	STANDARD CUBIC FEET PER MINUTE
EWB	ENTERING WET BULB	SD	SMOKE DAMPER
EWT	ENTERING WATER TEMPERATURE	SECT	SECTION
EX	EXTRACTOR	SENS	SENSIBLE
EXH	EXHAUST	SIM	SIMILAR
EXIST	EXISTING	SP	STATIC PRESSURE
EXP	EXPANSION	SPEC	SPECIFICATION
F	DEGREES FAHRENHEIT	SQ	SQUARE
FC	FORWARD CURVED	SF	SQUARE FOOT(FEET)
FIG	FIGURE	SQ IN	SQUARE INCH(ES)
FILT	FILTER	SS	STAINLESS STEEL
FLEX	FLEXIBLE	STL	STEEL
FPD	FLUID PRESSURE DROP	STRUCT	STRUCTUR(E)(AL)
FPM	FEET PER MINUTE	SWP	SINGLE WALL PLENUM
FPS	FEET PER SECOND	SWSI	SINGLE WIDTH SINGLE INLET
FT	FEET/FOOT	TEMP	TEMPERATURE
FTR	FINNED TUBE RADIATOR	TSP	TOTAL STATIC PRESSURE
FU	FIXTURE UNIT	TYP	TYPICAL
FUT	FUTURE	V	VOLTS
FV	FACE VELOCITY	VD	VOLUME DAMPER
GA	GAGE/GAUGE	VEL	VELOCITY
GAL	GALLON	VERT	VERTICAL
GALV	GALVANIZED	VFD	VARIABLE FREQUENCY DRIVE
GLY	GLYCOL	VTR	VENT THROUGH ROOF
GPH	GALLONS PER HOUR	W	WIDTH
GPM	GALLONS PER MINUTE	WG	WATER GAUGE
H	HEIGHT	WPD	WATER PRESSURE DROP
HORIZ	HORIZONTAL	WTD	WATER TEMPERATURE DROP
HP	HORSEPOWER	WTR	WATER TEMPERATURE RISE
HTG	HEATING	W/	WITH
ID	INSIDE(DIAMETER/DIMENSION)	W/O	WITHOUT

FIRE PROTECTION SYMBOLS

- FP — FIRE PROTECTION
- SPR — FIRE SPRINKLER
- DP — DRY PIPE SPRINKLER
- PA — PRE-ACTION SYSTEM
- WSP — WET STANDPIPE
- DSP — DRY STANDPIPE
- FDC — FIRE DEPARTMENT CONNECTION
- SRC — STANDPIPE ROOF CONNECTION
- SO — STANDPIPE OUTLET
- UPRIGHT SPRINKLER HEAD
- PENDANT SPRINKLER HEAD
- SIDEWALL SPRINKLER HEAD
- F — FLOW SWITCH
- S — SUPERVISED SHUT-OFF VALVE
- DPV — DRY PIPE VALVE ASSEMBLY
- PAV — PRE-ACTION VALVE ASSEMBLY

SYMBOLS

- A — ACCESS PANEL
- B — BELOW GRADE / FLOOR
- C — CONNECT TO EXISTING
- E — EXISTING TO REMAIN
- K — CAP EXISTING / CAP FOR FUTURE
- R — RELOCATE EXISTING
- X — REMOVE EXISTING
- 1 — NOTE

MISC. FITTINGS & SYMBOLS

- DIRECTION OF FLOW
- DIRECTION OF SLOPE
- PIPE SLEEVE
- REDUCER
- ANCHOR
- ELBOW (90°)
- ELBOW (45°)
- TEE
- CROSS
- PIPING CONNECTIONS
- JOINT OR COUPLING POINT
- UNION
- FLANGED CONNECTION
- CAP
- PLUG OR BLIND FLANGE
- RISER
- ELBOW UP
- ELBOW DOWN
- TEE UP
- TEE DOWN
- HORIZONTAL TEE
- FLEXIBLE CONNECTION
- BALL JOINT
- MC — MECHANICAL COUPLING

GENERAL NOTE

THIS IS A STANDARD LEGEND SHEET, THEREFORE, SOME SYMBOLS MAY APPEAR ON THIS SHEET THAT DO NOT APPEAR ON THE DRAWINGS.

MISC. VALVES & COCKS

- SHUT-OFF VALVE (SEE SPECS FOR TYPE REQUIRED)
- GLOBE VALVE
- S — SHUT-OFF VALVE W/ TAMPER SWITCH
- TRIPLE DUTY VALVE
- CHECK VALVE
- 2-WAY CONTROL VALVE
- 3-WAY CONTROL VALVE
- BALANCING VALVE
- FC — FLOW CONTROL VALVE
- SOLENOID VALVE
- PRESSURE REDUCING VALVE
- MAV, AAV — AIR VENT (MANUAL/AUTOMATIC)
- RELIEF VALVE
- STRAINER
- STRAINER W/ BLOWDOWN
- DV — DRAIN VALVE
- HB — HOSE BIBB
- WH — WALL HYDRANT
- G — GROUND HYDRANT
- F&T/IB — STEAM TRAP
- PRESSURE GAUGE
- PRESSURE/TEMPERATURE TEST PLUG
- THERMOMETER
- F — FLOW SWITCH
- T — TEMPERATURE TRANSMITTER
- S (SIZE) — SHOCK ARRESTOR
- V — VACUUM BREAKER
- WFM — WATER FLOW METER
- RPBA — REDUCED PRESSURE BACKFLOW ASSEMBLY
- DCVA — DOUBLE CHECK VALVE ASSEMBLY
- DCDA — DOUBLE CHECK DETECTOR ASSEMBLY
- BWV — BACKWATER VALVE
- UG — UNDERGROUND GATE VALVE W/BOX
- RIV — UNDERGROUND GATE W/POST INDICATOR
- OUTSIDE SCREW & YOKE
- Y PATTERN BOILER BLOWDOWN VALVE
- NON-RETURN STOP VALVE
- QUICK OPENING BOILER BLOWDOWN VALVE

FIRE PROTECTION EQUIPMENT SCHEDULE

ITEM	DESCRIPTION	ELECTRICAL

FIRE PROTECTION DESIGN CRITERIA

FIRE PROTECTION SPRINKLER DESIGN CRITERIA
CLASSIFIED AS LIGHT HAZARD. SYSTEM TO BE HYDRAULICALLY CALCULATED.
SYSTEM TO BE WET PIPE EXCEPT FOR AREAS SUBJECT TO FREEZING WHERE DRY HEADS ARE TO BE USED.

FIRE PROTECTION SYMBOLS

- F — FIRE PROTECTION
- SPR — FIRE SPRINKLER
- WSP — WET STANDPIPE
- CSP — COMBINATION STANDPIPE
- FDC — FIRE DEPARTMENT CONNECTION
- SRC — STANDPIPE ROOF CONNECTION
- SO — STANDPIPE OUTLET
- UPRIGHT SPRINKLER HEAD
- PENDANT SPRINKLER HEAD
- SIDEWALL SPRINKLER HEAD
- FLOW SWITCH
- SUPERVISED SHUT-OFF VALVE

SYMBOLS

- A — ACCESS PANEL
- B — BELOW GRADE / FLOOR
- X — REMOVE EXISTING
- 1 — NOTE

FIRE PROTECTION

FIRE PROTECTION SYSTEM TO BE DESIGN-BUILD. REFER TO DIVISION 21 SPECIFICATIONS AND ARCHITECTURAL COORDINATION DRAWINGS.

PIVOT ARCHITECTURE

REGISTERED PROFESSIONAL ENGINEER 18329PE NICHOLAS P. COLLINS JR. OREGON 19 DEC 2001
EXPIRES: 12-31-15
10-23-2014

PAE
Portland | San Francisco | Seattle
pae-engineers.com

HOWARD RECONCILED SET
EUGENE SCHOOL DISTRICT
700 HOWARD AVE, EUGENE, OREGON 97404
HOWARD ELEMENTARY SCHOOL

SYMBOLS, LEGENDS AND ABBREVIATIONS - FIRE PROTECTION

PROJECT #	1336
ISSUE DATE:	10/28/2014
DRAWN:	T.Z.
CHECKED:	NPC

REVISIONS

FP001

PRINTED ON: 10/23/2014 3:28:52 PM FROM FILE: C:\Revit Local Files\13-1532_HES MEP\13-1532_HES MEP14_stacy.hansen.rvt

© 2014 PIVOT ARCHITECTURE

GENERAL NOTES:

A. IT SHALL BE THE RERESPONSIBLITY OF THIS CONTRACTOR TO COORDINATE THE WORK WITH THAT OF ALL OTHER TRADES, INCLUDING BUT NOT LIMITED TO: ELECTRICAL, FIRE SPRINKLER, HVAC, STRUCTURAL AND GENERAL ARCHITECTURE.

B. IT IS THE INTENTION THAT THE ENTIRE BUILDING WILL BE FULLY SRPINKLERED IN ACCORDANCE WITH NFPA 13 AND LOCAL FIRE CODE.

C. ALL ZONES WITHIN THIS SCOPE ARE CONSIDERED LIGHT HAZARD AREAS. PROVIDE FULL COVERAGE AS REQUIRED.

D. EXPANSION JOINT/SEISMIC CONNECTORS SHALL BE COORDINATED WITH STRUCTURAL ENGINEER AT ALL PIPING CROSSING EXPANSION JOINTS.

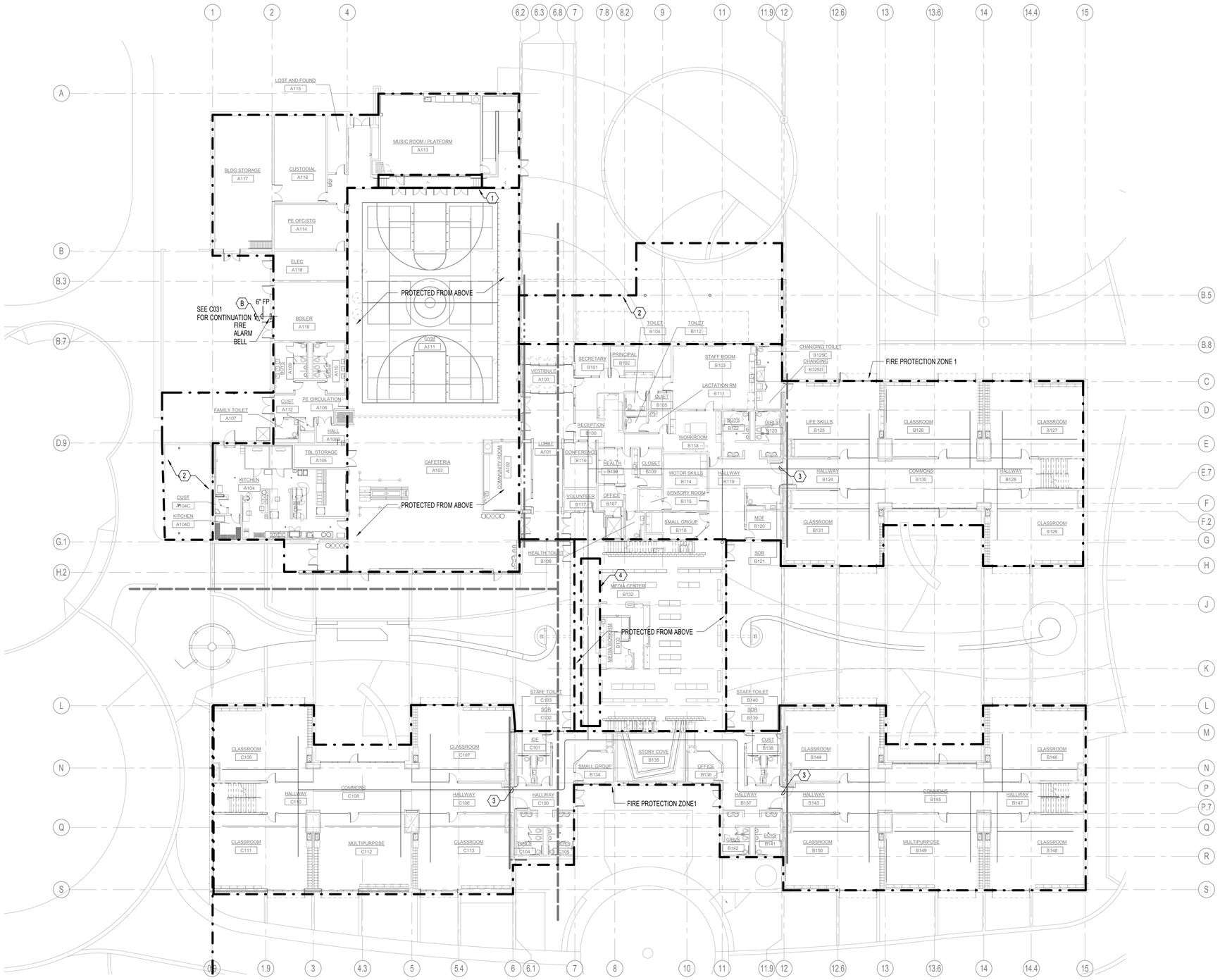

NOTES:

1. PROVIDE FIRE SPRINKLERS UNDER THE STAGE.

2. CANOPY SHALL BE PROTECTED BY DRY FIRE SPRINKLER SYSTEM.

3. PROVIDE EXPANSION JOINT/SEISMIC CONNECTOR AT PIPING CROSSING EXPANSION JOINTS. ALLOW FOR 6" OF THERMAL EXPANSION. REFER TO STRUCTURAL FOR SPECIFIC LOCATIONS OF EXPANSION JOINTS.

4. PROVIDE FRIE SPRINKLERS UNDER WALKWAY. REFER TO ARCHITECTURAL PLANS FOR SPECIFIC LOCATION OF WALKWAY.

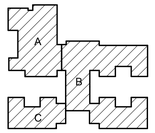

NORTH

1 LEVEL 1 OVERALL PLAN - FIRE PROTECTION
1/16" = 1'-0"

PIVOT ARCHITECTURE

REGISTERED PROFESSIONAL ENGINEER 18329PE
OREGON JAN 19 2001
NICHOLAS P. COLLINS JR.
EXPIRES: 12-31-15
10-23-2014

PAE
Portland | San Francisco | Seattle
pae-engineers.com

HOWARD RECONCILED SET
EUGENE SCHOOL DISTRICT
700 HOWARD AVE, EUGENE, OREGON 97404
HOWARD ELEMENTARY SCHOOL

OVERALL FIRST FLOOR PLAN - FIRE PROTECTION

PROJECT #	1306
ISSUE DATE:	10/28/2014
DRAWN:	TJL
CHECKED:	NPC

REVISIONS

FP101

PRINTED ON: 10/23/2014 3:28:58 PM FROM FILE: C:\Revit Local Files\13-1532_HES MEP\4\13-1532_HES MEP14_stacy.hansen.rvt

© 2014 PIVOT ARCHITECTURE

PRINTED ON: 10/22/2014 4:44:41 PM FROM FILE: C:\Revit Local Files\13-1532_HES MEP14\13-1532_HES MEP14_stacy.hansen.rvt

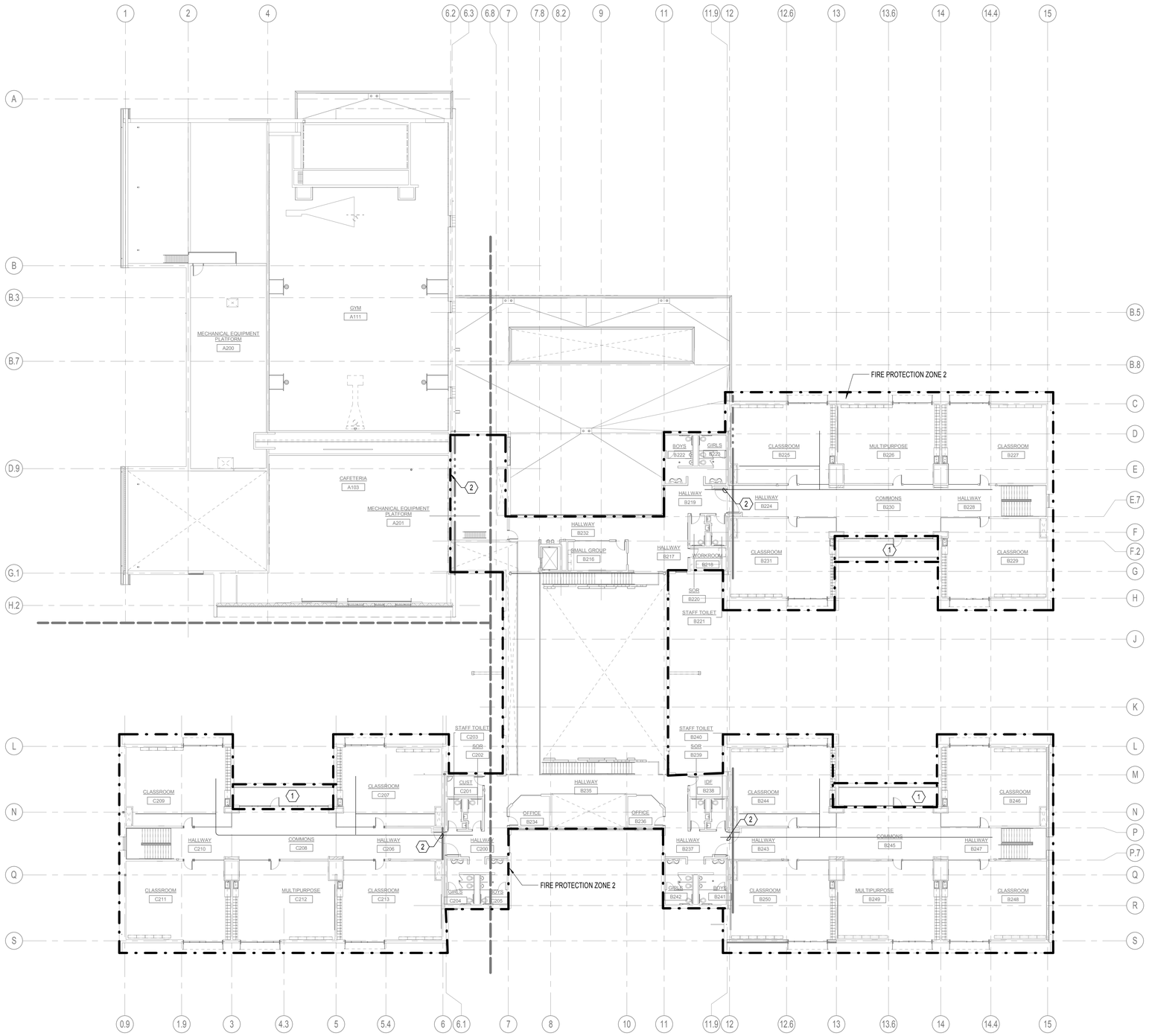

1 LEVEL 2 OVERALL PLAN - FIRE PROTECTION
1/16" = 1'-0"

GENERAL NOTES:

A. IT SHALL BE THE RERESPONSIBLITY OF THIS CONTRACTOR TO COORDINATE THE WORK WITH THAT OF ALL OTHER TRADES, INCLUDING BUT NOT LIMITED TO: ELECTRICAL, FIRE SPRINKLER, HVAC, STRUCTURAL AND GENERAL ARCHITECTURE.

B. IT IS THE INTENTION THAT THE ENTIRE BUILDING WILL BE FULLY SRPINKLERED IN ACCORDANCE WITH NFPA 13 AND LOCAL FIRE CODE.

C. ALL ZONES WITHIN THIS SCOPE ARE CONSIDERED LIGHT HAZARD AREAS. PROVIDE FULL COVERAGE AS REQUIRED.

D. EXPANSION JOINT/SEISMIC CONNECTORS SHALL BE COORDINATED WITH STRUCTURAL ENGINEER AT ALL PIPING CROSSING EXPANSION JOINTS.

NOTES:

1. COVERED BALCONIES SHALL BE PROTECTED WITH DRY HEAD SIDEWAY SPRINKLERS.

2. PROVIDE EXPANSION JOINT/SEISMIC CONNECTOR AT PIPING CROSSING EXPANSION JOINTS. ALLOW FOR 6" OF THERMAL EXPANSION. REFER TO STRUCTURAL FOR SPECIFIC LOCATIONS OF EXPANSION JOINTS.

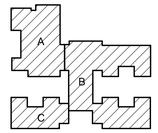

NORTH

PIVOT ARCHITECTURE

REGISTERED PROFESSIONAL ENGINEER 18329PE OREGON NICHOLAS P. COLLINS JR. 10-23-2014 EXPIRES: 12-31-15

PAE
Portland | San Francisco | Seattle
pae-engineers.com

HOWARD RECONCILED SET
EUGENE SCHOOL DISTRICT
700 HOWARD AVE, EUGENE, OREGON 97404
HOWARD ELEMENTARY SCHOOL

OVERALL SECOND FLOOR PLAN - FIRE PROTECTION

PROJECT #	1336
ISSUE DATE:	10/28/2014
DRAWN:	T.E.
CHECKED:	NPC

REVISIONS

FP102

© 2014 PIVOT ARCHITECTURE

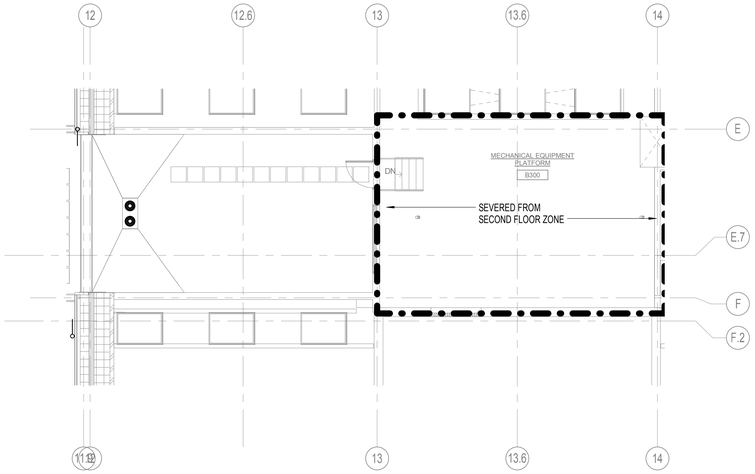

3 SECTOR B2 PARTIAL PLAN - PLUMBING
1/8" = 1'-0"

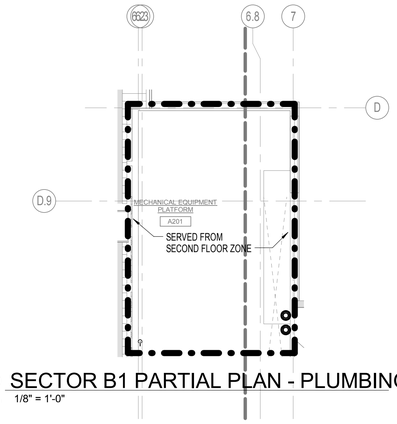

2 SECTOR B1 PARTIAL PLAN - PLUMBING
1/8" = 1'-0"

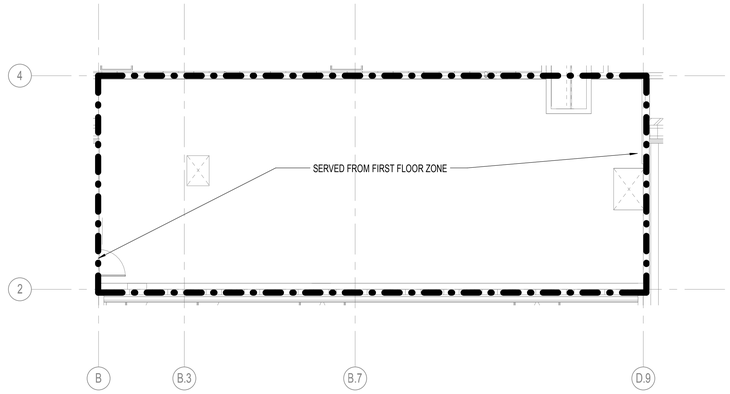

1 SECTOR A PARTIAL PLUMBING PLANS
1/8" = 1'-0"

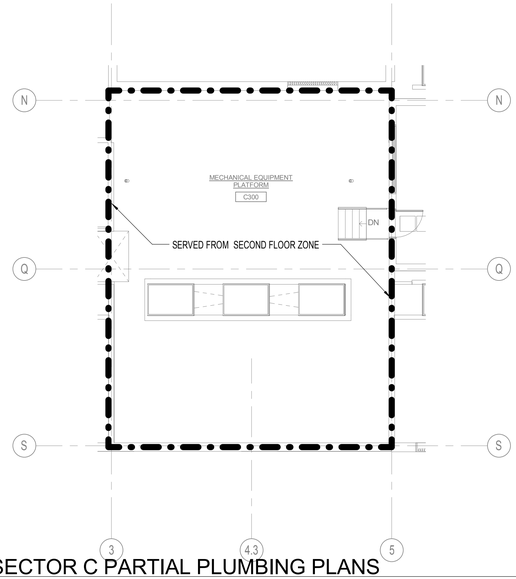

5 SECTOR C PARTIAL PLUMBING PLANS
1/8" = 1'-0"

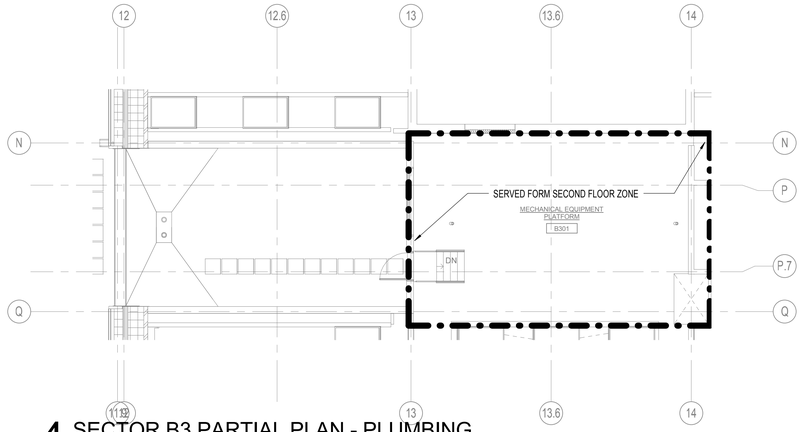

4 SECTOR B3 PARTIAL PLAN - PLUMBING
1/8" = 1'-0"

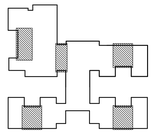

PIVOT ARCHITECTURE

REGISTERED PROFESSIONAL ENGINEER 18329PE
NICHOLAS P. COLLINGS JR.
10-23-2014
EXPIRES 12-31-15

PAE
Portland | San Francisco | Seattle
pae-engineers.com

HOWARD RECONCILED SET
EUGENE SCHOOL DISTRICT 4J
700 HOWARD AVE, EUGENE, OREGON 97404
HOWARD ELEMENTARY SCHOOL

MECHANICAL PLATFORMS - FIRE PROTECTION

PROJECT #	1336
ISSUE DATE:	10/28/2014
DRAWN:	TJL
CHECKED:	NPC

REVISIONS

FP103

PRINTED ON: 10/23/2014 3:29:11 PM FROM FILE: C:\Revit Local Files\13-1532_HES MEP\4\13-1532_HES MEP14_stacy.hansen.rvt

© 2014 PIVOT ARCHITECTURE

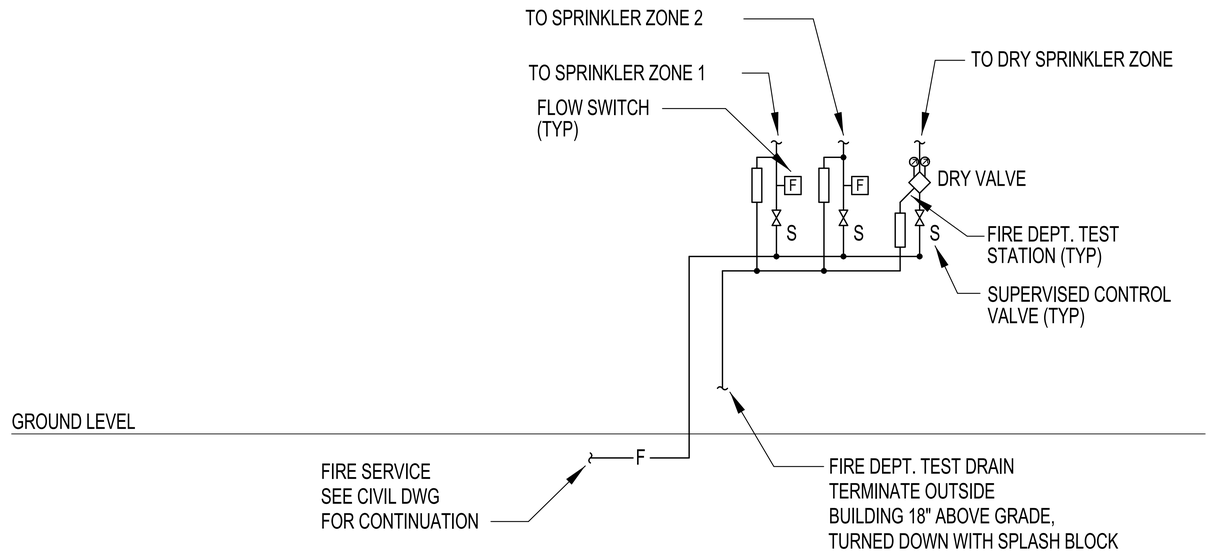

1 FIRE PROTECTION RISER DIAGRAM
NONE

PIVOT ARCHITECTURE

REGISTERED PROFESSIONAL ENGINEER
18329PE
OREGON
NICHOLAS P. COLLINGS JR.
10-23-2014
EXPIRES 12-31-15

PAE
Portland | San Francisco | Seattle
pae-engineers.com

HOWARD RECONCILED SET
4J
EUGENE SCHOOL DISTRICT
700 HOWARD AVE, EUGENE, OREGON 97404
HOWARD ELEMENTARY SCHOOL

DETAILS - FIRE PROTECTION

PROJECT #	1336
ISSUE DATE:	10/28/2014
DRAWN:	TJL
CHECKED:	NPC
REVISIONS:	

FP501

PRINTED ON: 10/23/2014 3:29:12 PM FROM FILE: C:\Revit Local Files\13-1532_HES MEP\413-1532_HES MEP14_stacy.hansen.rvt

© 2014 PIVOT ARCHITECTURE

ABBREVIATIONS

AFF	ABOVE FINISHED FLOOR	KWH	KILOWATT HOUR
A	AMPERE (AMP)	KV	KILOVOLT
AL	ALUMINUM	KVA	KILOVOLT AMP
ARCH	ARCHITECT / ARCHITECTURAL	KVAR	KILOVOLT AMPS REACTIVE
ATS	AUTOMATIC TRANSFER SWITCH	LA	LIGHTNING ARRESTOR
BOCT	BOTTOM OF CABLE TRAY	LTG	LIGHTING
CB	CIRCUIT BREAKER	LV	LOW VOLTAGE
C	CONDUIT	MATV	MASTER ANTENNA TELEVISION
CCTV	CLOSED CIRCUIT TELEVISION	MCA	MINIMUM CIRCUIT AMPS
CKT	CIRCUIT	MCB	MAIN CIRCUIT BREAKER
CLG	CEILING	MCC	MOTOR CONTROL CENTER
CT	CURRENT TRANSFORMER	MDP	MAIN DISTRIBUTION PANEL
CU	COPPER	MECH	MECHANICAL
DN	DOWN	MH	METAL HALIDE
EM	EMERGENCY	MLO	MAIN LUGS ONLY
EMERG	EMERGENCY	MV	MERCURY VAPOR
EMT	ELECTRIC METALLIC TUBING	MTS	MANUAL TRANSFER SWITCH
EP	EXPLOSION PROOF	NIC	NOT IN CONTRACT
EPO	EMERGENCY POWER OFF	NL	NIGHT LIGHT CIRCUIT
EWC	ELECTRIC WATER COOLER	PA	PUBLIC ADDRESS
FA	FIRE ALARM	PE	PHOTO ELECTRIC CELL
FACP	FIRE ALARM CONTROL PANEL	PF	POWER FACTOR
FLA	FULL LOAD AMPS	PNL	PANELBOARD
FLUOR	FLUORESCENT	PVC	POLYVINYL CHLORIDE CONDUIT
FCIC	FURNISHED BY CONTRACTOR INSTALLED BY CONTRACTOR	PWR	POWER
		SDP	SUB-DISTRIBUTION PANEL
FOIC	FURNISHED BY OWNER INSTALLED BY CONTRACTOR	STR	STARTER
		SV	SOLENOID VALVE
FOIO	FURNISHED BY OWNER INSTALLED BY OWNER	SW	SWITCH
		TD	TIME DELAY
GFP	GROUND FAULT PROTECTION	TP	TAMPERPROOF
GFI	GROUND FAULT INTERRUPTER	TTB	TELEPHONE TERMINAL BOARD
GFCI	GROUND FAULT CIRCUIT INTERRUPTER	TTC	TELEPHONE TERMINAL CABINET
GRC	GALVANIZED RIGID CONDUIT	TV	TELEVISION
GRD	GROUND	TYP	TYPICAL
HP	HORSEPOWER	UG	UNDERGROUND
HPS	HIGH PRESSURE SODIUM	UPS	UNINTERRUPTABLE POWER SUPPLY
HV	HIGH VOLTAGE	V	VOLTAGE
HZ	HERTZ	VA	VOLT AMPERES
IG	ISOLATED GROUND	VP	VAPOR PROOF
INC	INCANDESCENT	W	WATTS
JB	JUNCTION BOX	WP	WEATHER PROOF
KDU	KEYBOARD/DISPLAY UNIT	XFMR	TRANSFORMER
KW	KILOWATT	XFSW	TRANSFER SWITCH

EQUIPMENT

- ELECTRICAL EQUIPMENT (GENERIC)
- PANELBOARD: SURFACE, RECESSED
- CABINET: SURFACE, RECESSED
- TRANSFORMER
- GROUND ROD, IN TEST WELL
- GROUND PAD
- DISCONNECT SWITCH
- PLYWOOD BACKBOARD
- ATS SWITCH
- CONDUIT ROUTING WITH PULL BOX

DESIGNATION SYMBOLS

- EQUIPMENT DESIGNATOR SEE SCHEDULE.
- E — EXISTING TO REMAIN, EXISTING TO BE REMOVED
- R — EXISTING TO BE RELOCATED, FUTURE
- N — NEW, CONNECT TO
- T — NOTE

NOTE

THIS IS A STANDARD LEGEND SHEET, THEREFORE, SOME SYMBOLS MAY APPEAR ON THIS SHEET THAT DO NOT APPEAR ON THE DRAWINGS.

LIGHTING

- UNI-STRUT LIGHTING ASSEMBLY
- CEILING LUMINAIRE: SURFACE, RECESSED
- CEILING LUMINAIRE: PENDANT MOUNTED
- PENDANT LUMINAIRE: SMALL PROFILE, WIDE PROFILE
- WALL LUMINAIRE: SURFACE, RECESSED
- WALL WASHER: SURFACE, RECESSED
- TRACK WITH HEADS LOCATED
- FLUORESCENT LUMINAIRE: SURFACE, RECESSED
- FLUORESCENT LUMINAIRE: WALL MOUNTED
- FLUORESCENT LUMINAIRE: BARE LAMP
- POLE LIGHT: LUMINAIRES AS SHOWN
- DESIGNATES LIGHT ON EMERGENCY CIRCUIT
- EXIT LIGHT: CEILING, WALL (ARROWS AS SHOWN)
- BOLLARD
- EMERGENCY BATTERY LIGHT: HEADS AS SHOWN
- $ — WALL SWITCH: 1 POLE, SENTRY SWITCH
- $3 — WALL SWITCH: 3 WAY, 4 WAY
- $K — WALL SWITCH: KEY LOCK, MOMENTARY
- $LV — WALL SWITCH: LOW VOLTAGE, PILOT
- $T — WALL SWITCH: TIMER, MANUAL DIMMER
- A — DESIGNATES LUMINAIRE TYPE (SEE LUMINAIRE SCHEDULE)
- NL — DESIGNATES NIGHT LIGHT CIRCUIT
- PE — PHOTOELECTRIC CELL: WALL MOUNTED, CEILING MOUNTED
- OS — OCCUPANCY SENSOR: CEILING OR WALL MOUNTED; REFERENCE FLOOR PLANS FOR TYPE OF SENSOR
- PP — POWER PACK
- B — BALLAST (DIMMING)

POWER

- WALL RECEPTACLE: SINGLE, DUPLEX
- WALL RECEPTACLE: EMERGENCY, QUADPLEX
- WALL RECEPTACLE: ISOLATED GROUND
- CEILING RECEPTACLE: DUPLEX, QUADPLEX
- FIRE RATED FLOOR POKE-THRU
- DENOTES RECEPTACLE ABOVE COUNTER
- SPECIAL PURPOSE OUTLET AS NOTED, EMERGENCY
- FLUSH IN-FLOOR OUTLET: DUPLEX, QUAD
- SURFACE OUTLET STRIP: DIMENSION AS SHOWN
- JUNCTION BOX
- OL — MOTOR STARTER: MANUAL, MAGNETIC, COMBINATION
- MOTOR CONNECTION
- C S — CONTACTOR, SOLENOID
- PUSH BUTTON STATION
- UL — UL 924 DEVICE
- R — LIGHTING RELAY
- WIRING CONCEALED IN CEILING OR WALL
- WIRING CONCEALED IN FLOOR OR UNDERGROUND
- INDICATES INSULATED GREEN GROUND WIRE
- HOME RUN DESTINATION SHOWN
- CONDUIT ELL: UP, DN.

SIGNAL

FIRE ALARM

- FS — SPRINKLER SYSTEM SWITCH: FLOW, TAMPER
- F — MANUAL FIRE ALARM STATION
- 1 — DETECTOR: IONIZATION, HEAT, PHOTOELECTRIC
- P — DETECTOR: BEAM
- 1 — DUCT DETECTOR, TYPE AS NOTED
- F — FIRE ALARM: VISUAL
- F — FIRE ALARM: BELL; BELL W/VISUAL
- F C — FIRE ALARM: HORN; HORN W/VISUAL; CEILING MOUNTED
- F — FIREMANS PHONE JACK
- S — SPEAKER: WALL, CEILING
- D — MAGNETIC DOOR HOLDER, CLOSER
- F — FIRE ALARM SPEAKER: WALL, CEILING

TELECOMMUNICATIONS

- E — WALL OUTLET: TELEPHONE, EMERGENCY TELEPHONE, DATA
- D,U,R — WALL OUTLET: COMBINATION TELEPHONE/DATA; CABLE/JACK QUANTITY
- M I A — WALL OUTLET: MICROPHONE, INTERCOM, AUDIO JACK
- WALL OUTLET: VOLUME CONTROL
- SYSTEM CLOCK: WALL, CEILING
- TV — MASTER ANTENNA TV OUTLET
- THERMOSTAT
- CABLE TRAY

SECURITY

- CCTV CAMERA
- ELECTRIC DOOR LOCK, CONTACT
- E — MANUAL EMERGENCY SECURITY STATION
- K — CARD KEY READER STATION
- SECURITY ELECTRONIC SENSOR

ONE-LINE

- CIRCUIT BREAKER
- SWITCH, FUSED SWITCH
- BUSS
- AUTOMATIC SWITCH
- M — METER
- XXX XX — PANEL
- X — FEEDER CALLOUT
- XXX — FAULT CURRENT CALLOUT
- G — GENERATOR

MOUNTING HEIGHTS

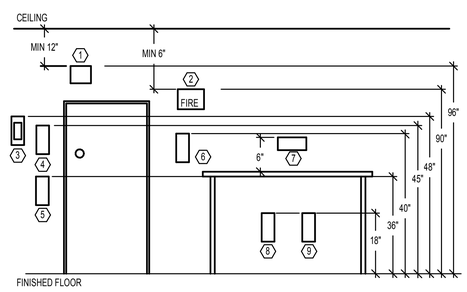

GENERAL NOTES:

1. LOCATE ALL FIRE ALARM DEVICES PER CODE.
2. LOCATE ALL ACCESSIBLE SWITCHES PER ADA GUIDELINES.
3. FIELD COORDINATE ALL ABOVE COUNTER DEVICES WITH MILLWORK CONTRACTOR.
4. IF APPLICABLE, TELCOM CONSULTANTS DRAWINGS TAKE PRECEDENCE OVER THIS DETAIL FOR TELCOM DEVICES.

NOTES:

1. OCCUPANCY SENSOR
2. FIRE ALARM STROBES
3. FIRE ALARM PULL STATION
4. LIGHT SWITCH
5. CARD READER
6. WALL PHONE
7. ABOVE COUNTER RECEPTACLE
8. RECEPTACLE
9. DATA OUTLET

PIVOT ARCHITECTURE

REGISTERED PROFESSIONAL ENGINEER — OREGON — JULY 16, 1987 — STEPHEN J. TURNA — EXPIRES: 6-30-16 — 10-23-14

PAE — Portland | San Francisco | Seattle — pae-engineers.com

HOWARD RECONCILED SET

4J EUGENE SCHOOL DISTRICT
700 HOWARD AVE, EUGENE, OREGON 97404

HOWARD ELEMENTARY SCHOOL

SYMBOLS, LEGENDS AND ABBREVIATIONS - ELECTRICAL

PROJECT #	1335
ISSUE DATE:	10/28/2014
DRAWN:	AMT
CHECKED:	SJT
REVISIONS:	

E001

PRINTED ON: 10/23/2014 3:12:22 PM FROM FILE: C:\Revit Local Files\13-1532_HES MEP\4113-1532_HES MEP14_stacy.hansen.rvt

Tag	Description	Size	Watts	Lamp(s)	Ballast	Voltage	Product	Mounting	Finish	Notes
L1-4	SUSPENDED LED LINEAR DIRECT/INDIRECT	NOMINAL 8 INCH WIDE X 2 INCH DEEP X FOUR FEET LONG	41	LED, 4000K 4500 DELIVERED LUMENS PER FOUR FOOT SECTION	0-10 DIMMING ELECTRONIC	UNIVERSAL VOLTAGE	CORELITE JALULUM SERIES, PEERLESS STAPLE SERIES, LEDALITE SYNC SERIES, AXIS SURROUNDLIGHT SERIES	SUSPENDED AIRCRAFT CABLE	STANDARD AS SELECTED BY ARCHITECT	NOMINAL DISTRIBUTION IS TO BE 70% INDIRECT 30 % DIRECT.
L1-8	SUSPENDED LED LINEAR DIRECT/INDIRECT	NOMINAL 8 INCH WIDE X 2 INCH DEEP X EIGHT FEET LONG	82	LED, 4000K 4500 DELIVERED LUMENS PER FOUR FOOT SECTION	0-10 DIMMING ELECTRONIC	UNIVERSAL VOLTAGE	CORELITE JALULUM SERIES, PEERLESS STAPLE SERIES, LEDALITE SYNC SERIES, AXIS SURROUNDLIGHT SERIES	SUSPENDED AIRCRAFT CABLE	STANDARD AS SELECTED BY ARCHITECT	NOMINAL DISTRIBUTION IS TO BE 70% INDIRECT 30 % DIRECT.
L2	RECESSED LENSED LED	4 INCH X 4 INCH X 4 FEET LONG	32	LED 4000 K 3000 LUMENS PER FOUR FOOT SECTION	0-10 DIMMING ELECTRONIC	UNIVERSAL VOLTAGE	AXIS BEAM SERIES, NULITE RT4 SERIES , NEO RAY STRAIGHT AND NARROW SERIES	CEILING RECESSED	STANDARD AS SELECTED BY ARCHITECT	FLANGELESS INSTALLATION
L2A	SAME AS TYPE L2 EXCEPT VERTICAL WALL MOUNT - FLANGELESS	4 INCH X 4 INCH X 4 FEET LONG	32	LED 4000 K 3000 LUMENS PER FOUR FOOT SECTION	0-10 DIMMING ELECTRONIC	UNIVERSAL VOLTAGE	AXIS BEAM SERIES, NULITE RT4 SERIES , NEORAY STRAIGHT AND NARROW SERIES	CEILING RECESSED	STANDARD AS SELECTED BY ARCHITECT	FLANGELESS VERTICAL WALL MOUNT INSTALLATION
L3A	RECESSED LED CIRCULAR CLOUD	2 FOOT DIAMETER	29	LED 4000K 1400 LUMENS	0-10 DIMMING ELECTRONIC	UNIVERSAL VOLTAGE	PRUDENTIAL P9000 SERIES, MARK LIGHTING MAGELLAN SERIES	CEILING RECESSED	STANDARD AS SELECTED BY ARCHITECT	
L3B	RECESSED LED CIRCULAR CLOUD	4 FOOT DIAMETER	89	LED 4000K 5500 LUMENS	0-10 DIMMING ELECTRONIC	UNIVERSAL VOLTAGE	PRUDENTIAL P9000 SERIES, MARK LIGHTING MAGELLAN SERIES	CEILING RECESSED	STANDARD AS SELECTED BY ARCHITECT	
L4	RECESSED LED 2X2	2X2 FEET SQUARE	37	LED, 3700 LUMENS	0-10 DIMMING ELECTRONIC	UNIVERSAL VOLTAGE	LITHONIA 2ALL SERIES, CORELITE ENCOUNTER SERIES LEDALITE PURE FX SERIES, AXIS DAYBRITE	CEILING RECESSED	STANDARD AS SELECTED BY ARCHITECT	
L4A	RECESSED LED 2X2 FOOD SERVICE RATED	2X2 FEET SQUARE	45	LED, 4000K 4400 LUMENS	0-10 DIMMING ELECTRONIC	UNIVERSAL VOLTAGE	KURTZON FP SERIES PARAMOUNT APPROVED PENDING VERIFICATION OF SPEC COMPLIANCE	CEILING RECESSED	STANDARD AS SELECTED BY ARCHITECT	FOOD SERVICE RATED
L5	RECESSED LED DOWNLIGHT	6 INCH ROUND APERTURE	28	LED, 4000K, 1800 LUMENS	0-10 DIMMING ELECTRONIC	UNIVERSAL VOLTAGE	GOTHAM EVO SERIES PORTFOLIO LD6A SERIES, INDY, LIGHTOLIER CALCULYTE	CEILING RECESSED	CLEAR ALZAK REFLECTOR	
L6	SURFACE MOUNTED LINEAR LED	NOMINAL 8 INCH WIDE X FOUR FEET LONG	40	LED, 4000K, 4000 LUMENS	0-10 DIMMING ELECTRONIC	UNIVERSAL VOLTAGE	LITHONIA STL SERIES, OR PRE-BID APPROVED	SURFACE CEILING	STANDARD AS SELECTED BY ARCHITECT	
L7	SURFACE OR SUSPENDED LED LENSED STRIP	NOMINAL 3 INCH WIDE X 4 FEET LONG	32	LED 4000K 1800 LUMENS	0-10 DIMMING ELECTRONIC	UNIVERSAL VOLTAGE	LITHONIA ZL2N SERIES, METALUX SNLED SERIES WILLIAMS DAYBRITE LF SERIES OR PREBID APPROVED	SURFACE CEILING, OR CHAIN HUNG	STANDARD AS SELECTED BY ARCHITECT	
L8	LINEAR LED HIGHBAY	NOMINAL 4 INCH WIDE X 16 FOOT ROW AND 4 FOOT LONG INDIVIDUAL	47 PER FOUR FEET	LED 4000K, 3500 LUMENS PER FOUR FEET	0-10 DIMMING ELECTRONIC	UNIVERSAL VOLTAGE	LITHONIA PTSNL SERIES	SURFACE TO BOTTOM CHORD OF TRUSS	STANDARD AS SELECTED BY ARCHITECT	
L10	LED CYLINDER	16 HIGH X 8 INCH DIAMETER WITH 6 INCH APERTURE	99	LED 4000K, 6000 LUMEN 60 DEGREE	0-10 DIMMING ELECTRONIC	UNIVERSAL VOLTAGE	GOTHAM INCITO, PORTFOLIO LC18A.	SURFACE	STANDARD AS SELECTED BY ARCHITECT	

PIVOT ARCHITECTURE

REGISTERED PROFESSIONAL ENGINEER 11612 OREGON JULY 16, 1985 STEPHEN J. TURINA

10-23-14

EXPIRES: 6-30-16

PAE

Portland | San Francisco | Seattle
pae-engineers.com

HOWARD RECONCILED SET

EUGENE SCHOOL DISTRICT
700 HOWARD AVE, EUGENE, OREGON 97404

HOWARD ELEMENTARY SCHOOL

LUMINAIRE SCHEDULE 1 OF 2

PROJECT #	1.1305	REVISIONS
ISSUE DATE:	10/28/2014	
DRAWN:	AMT	
CHECKED:	SJT	

E002

© 2014 PIVOT ARCHITECTURE

PRINTED ON: 10/23/2014 3:12:24 PM FROM FILE: C:\Revit Local Files\13-1532_HES MEP14\13-1532_HES MEP14_stacy.hansen.rvt

© 2014 PIVOT ARCHITECTURE

Tag	Description	Size	Watts	Lamp(s)	Ballast	Voltage	Product	Mounting	Finish	Notes
L10A	LED CYLINDER	16 HIGH X 8 INCH DIAMETER WITH 6 INCH APERTURE	99	LED 4000K, 6000 LUMEN 45 DEGREE	0-10 DIMMING ELECTRONIC	UNIVERSAL VOLTAGE	GOTHAM INCITO, PORTFOLIO LCR8A.	SURFACE	STANDARD AS SELECTED BY ARCHITECT	
L10B	LED CYLINDER	16 HIGH X 8 INCH DIAMETER WITH 6 INCH APERTURE	99	LED 4000K, 4000 LUMEN 30 DEGREE	0-10 DIMMING ELECTRONIC	UNIVERSAL VOLTAGE	GOTHAM INCITO, PORTFOLIO LCR8A.	SURFACE	STANDARD AS SELECTED BY ARCHITECT	
L11	LED STEP LIGHT	5 1/4 X 2 7/8 X 4	2.1	LED 4000K, 36 LUMEN 3000K	ELEELCTRONIC NON DIM	120 V	BEGA 1325 LED, WE-EF OR PRE BID APPROVED	RECESSED WALL	STANDARD AS SELECTED BY ARCHITECT	
L12	RECESSSED SMALL DIAMETER	2 1/2 INCH DIAMETER X 4 INCH DEEP	3 WATT	120 LUMEN 3000K	ELECTRONIC	120/277V	BRUCK LEDRA 12 WITH J-BOX AND DRIVER	RECESSED CEILING IN DISPLAY CASE	MATTE CHROME	
L13	LINEAR WET LOCATION LED	NOMINAL 8 INCH WIDE X 4 FEET LONG	39 WATT	LED 2975 LUMEN 4100 K	ELECTRONIC	120/277V	LITHONIA VAP SERIES, BEGHELLI OR PRE BID APPROVED	CEILING MOUNT OR SUSPENDED	STANDARD AS SELECTED BY ARCHITECT	
L14	SUSPENDED LED CIRCULAR DIRECT/INDIRECT	NOMINAL 5 INCH HIGH X 3 FOOT DIAMETER	60 WATT	LED 4000K, 2790 LUMENS	REMOTE DRIVER ELECTRONIC	120/277V	DELRAY CYLINDRO III	SUSPENDED AIRCRAFT CABLE	STANDARD AS SELECTED BY ARCHITECT	
L14 A	SUSPENDED LED CIRCULAR DIRECT/INDIRECT	NOMINAL 5 INCH HIGH X 4 FOOT DIAMETER	85 WATT	LED 4000K, 3683 LUMENS	REMOTE DRIVER ELECTRONIC	120/277V	DELRAY CYLINDRO III	SUSPENDED AIRCRAFT CABLE	STANDARD AS SELECTED BY ARCHITECT	
X	UNIVERSAL LED EXIT SIGN	13-7/8 X 8.5	3 WATT	GREEN LED	ELECTRONIC	120/277V	LITHONIA EXTREME SERIES, UNIVERSAL MOUNT WITH BATTERY		STANDARD AS SELECTED BY ARCHITECT	WHITE WITH GREEN LETTERS UNIVERSAL MOUNT, UNIVERSAL FIELD ADJUSTABLE DIRECTIONAL ARROWS
X1	WEATHERPROOF EXIT SIGN	13-7/8 X 8.5	3 WATT	GREEN LED	ELECTRONIC	120/277V	LITHONIA EXTREME SERIES, UNIVERSAL MOUNT WITH BATTERY		STANDARD AS SELECTED BY ARCHITECT	WEATHERPROOF ENCLOSURE WHITE WITH GREEN LETTERS UNIVERSAL MOUNT, UNIVERSAL FIELD ADJUSTABLE DIRECTIONAL ARROWS
S1	SITE AREA LED POLE LIGHT	20 INCH DIAMETER	135	LED 4000K 14000 LUMEN	DUAL DRIVER FOR LIGHT REDUCTION	UNIVERSAL VOLTAGE	LITHONIA OMERO SERIES TYPE V DISTRIBUTION, OR PRE BID APPROVED		STANDARD AS SELECTED BY ARCHITECT	18 FOOT POLE ON FLUSH BASE SEE DETAIL
S2	SITE AREA LED POLE LIGHT	20 INCH DIAMETER	135	LED 4000K 14000 LUMEN	DUAL DRIVER FOR LIGHT REDUCTION	UNIVERSAL VOLTAGE	LITHONIA OMERO SERIES TYPE IV DISTRIBUTION, OR PRE BID APPROVED		STANDARD AS SELECTED BY ARCHITECT	18 FOOT POLE ON FLUSH BASE SEE DETAIL
S3	SITE LED LIGHT COLUMN	8 INCH WIDE X 8 FEET TALL	40	LED 4000K 1100 LUMEN	ELECTRONIC	120/277V	BEGA 7844 SERIES, OR PRE BID APPROVED		STANDARD AS SELECTED BY ARCHITECT	FLUSH BASE
S3A	SAME AS TYPE S3 EXCEPT 5 FOOT INSTALLED HEIGHT	8 INCH WIDE X 8 FEET TALL	40	LED 1100 LUMEN 4000K	ELECTRONIC	120/277V	BEGA 7844 SERIES, OR PRE BID APPROVED		STANDARD AS SELECTED BY ARCHITECT	FLUSH BASE
S4	SITE LED BOLLARD	8 INCH DIAMETER X 36 INCH HIGH	12	LED435 LUMEN 3500K	ELECTRONIC	120/277V	SELUX NOTCH, HESS AMERICA, POULSEN OR PRE BID APPROVED.		STANDARD AS SELECTED BY ARCHITECT	SEE BASE DETAIL
S5	WALL MOUNTED LED BUILDING MOUNTED	16 INCH WIDE X 8 INCH HIGH	24	2000 LUMEN TYPE III 4000 K	ELECTRONIC	120/277V	LITHONIA WST, GARDCO OR PRE BID APPROVED		STANDARD AS SELECTED BY ARCHITECT	
S6	FLAG POLE LIGHT		18	LED 4100K MFL	ELECTRONIC	UNIVERSAL VOLTAGE	HYDREL TPS1 SERIES	SURFACE GROUND MOUNT	STANDARD AS SELECTED BY ARCHITECT	PROVIDE 1 X1 X1 FOOT CONCRETE BASE

PIVOT ARCHITECTURE

REGISTERED PROFESSIONAL ENGINEER — STEPHEN J. TURNIA — OREGON — JAN 16, 1985

EXPIRES: 6-30-16

10-23-14

PAE
Portland | San Francisco | Seattle
pae-engineers.com

HOWARD RECONCILED SET

4J EUGENE SCHOOL DISTRICT
700 HOWARD AVE. EUGENE, OREGON 97404

HOWARD ELEMENTARY SCHOOL

LUMINAIRE SCHEDULE 2 OF 2

PROJECT #	1.1308
ISSUE DATE:	10/28/2014
DRAWN:	AMT
CHECKED:	SJT

REVISIONS:

E003

PRINTED ON: 10/23/2014 3:12:25 PM FROM FILE: C:\Revit Local Files\13-1532_HES MEP14\13-1532_HES MEP14_stacy.hansen.rvt

© 2014 PIVOT ARCHITECTURE

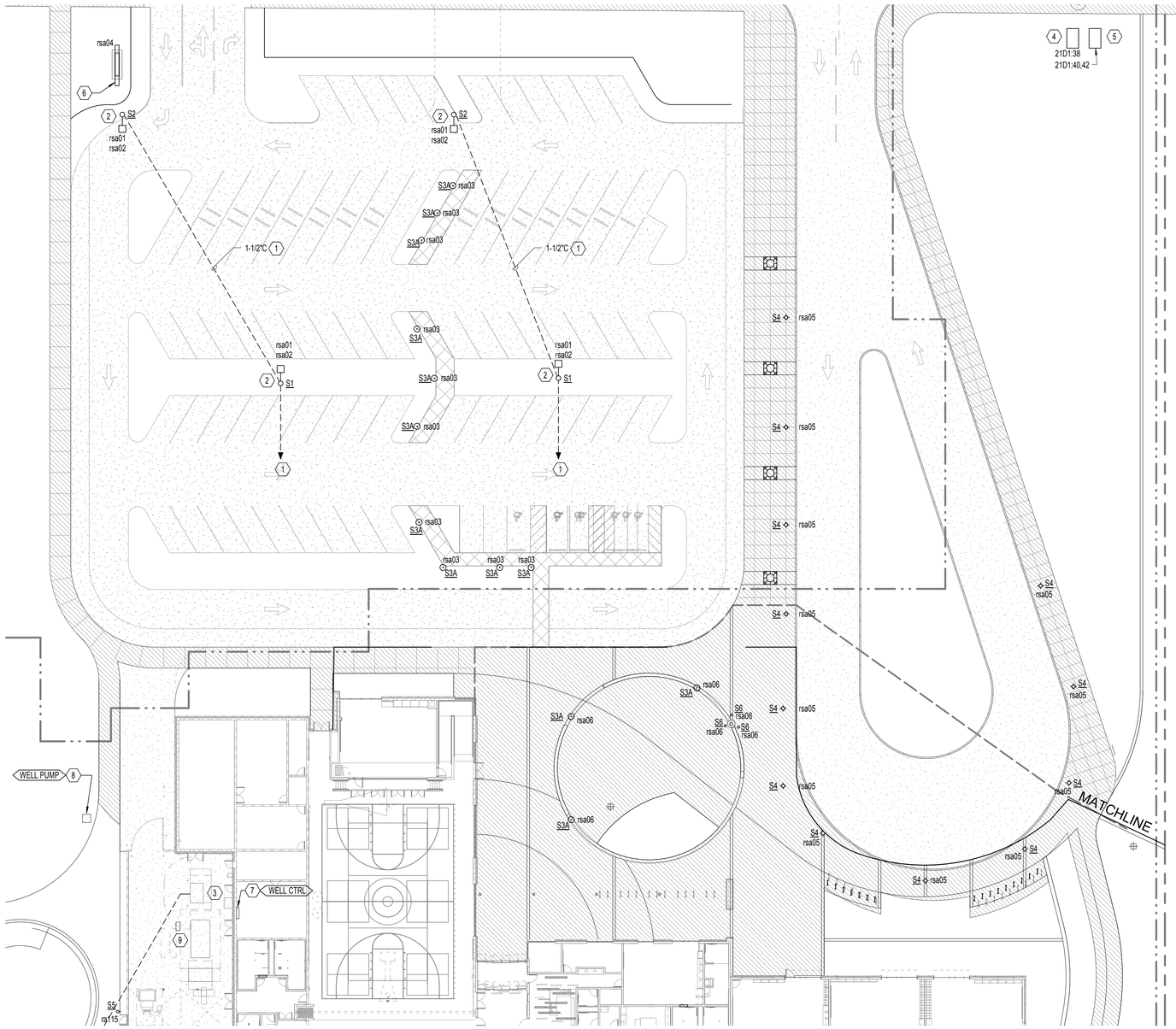

1 SITE PLAN - ELECTRICAL
1" = 20'-0"

NORTH

GENERAL NOTES:

A. ELECTRICAL WORK SHOWN IS DIAGRAMMATIC AND IS MEANT TO REPRESENT GENERAL ROUTING AND EQUIPMENT LOCATIONS. NOT EVERY BEND, OFFSET, PULLBOX, ETC, IS SHOWN. CONTRACTOR SHALL PROVIDE ALL WORK REQUIRED FOR A COMPLETE INSTALLATION.

B. COORDINATE ALL UNDERGROUND SITE WORK WITH EXISTING AND NEW UTILITIES.

C. ALL BRANCH CIRCUITING AT BUILDING EXTERIOR AND SITE SHALL BE #10AWG MINIMUM, UNLESS OTHERWISE NOTED.

D. PROVIDE SEPARATE NEUTRAL CONDUCTOR FOR EACH BRANCH CIRCUIT.

E. REFER TO LIGHTING RELAY SCHEDULE ON SHEET E703 FOR ADDITIONAL INFORMATION.

F. PROVIDE NO MORE THAN (6) CURRENT CARRYING CONDUCTORS (INCLUDING NEUTRAL) PER HOMERUN.

G. COORDINATE INSTALLATION OF NEW ELECTRICAL SERVICE WITH EWEB.

NOTES:

1. PROVIDE 1-1/2" CONDUIT TO MDF FOR SECURITY CAMERA WIRING BY OTHERS.

2. PROVIDE (2) RELAYS PER POLE FOR LIGHT REDUCTION BASED ON TIME CLOCK INPUT.

3. TRANSFORMER VAULT. UTILITY VAULT CO MODEL 712-LA REFERENCE EWEB DRAWINGS FOR ADDITIONAL INFORMATION.

4. PROVIDE ELECTRICAL CONNECTION TO 1/2 HP PUMP IN DCD BFP VAULT.

5. PROVIDE ELECTRICAL CONNECTION (2-#4AWG CU AND 1-#6AWG CU GRD) TO EACH OF THE TWO (2) 1500 WATT HEATERS IN RP BFP VAULT.

6. MONUMENT SIGN. PROVIDE 1 INCH CONDUIT FROM SIGN TO MDF. CONDUIT TO BE USED FOR DATA CABLING TO SIGN. CABLING BY OTHERS.

7. NEW IRRIGATION WELL CONTROLLER. SEE MECHANICAL EQUIPMENT CONNECTION SCHEDULE FOR ADDITIONAL INFORMATION.

8. NEW IRRIGATION WELL PUMP. SEE MECHANICAL EQUIPMENT CONNECTION SCHEDULE FOR ADDITIONAL INFORMATION.

PIVOT ARCHITECTURE

REGISTERED PROFESSIONAL ENGINEER 11612 OREGON JULY 16, 1985 STEPHEN J. TURNIA
10-23-14
EXPIRES: 6-30-16

PAE
Portland | San Francisco | Seattle
pae-engineers.com

HOWARD RECONCILED SET
EUGENE SCHOOL DISTRICT
700 HOWARD AVE, EUGENE, OREGON 97404
HOWARD ELEMENTARY SCHOOL

SITE PLAN - ELECTRICAL

PROJECT #	1336
ISSUE DATE:	10/28/2014
DRAWN:	AMT
CHECKED:	SJT

REVISIONS:

E010

PRINTED ON: 10/23/2014 3:12:30 PM FROM FILE: C:\Revit Local Files\13-1532_HES MEP14\13-1532_HES MEP14_stacy.hansen.rvt

© 2014 PIVOT ARCHITECTURE

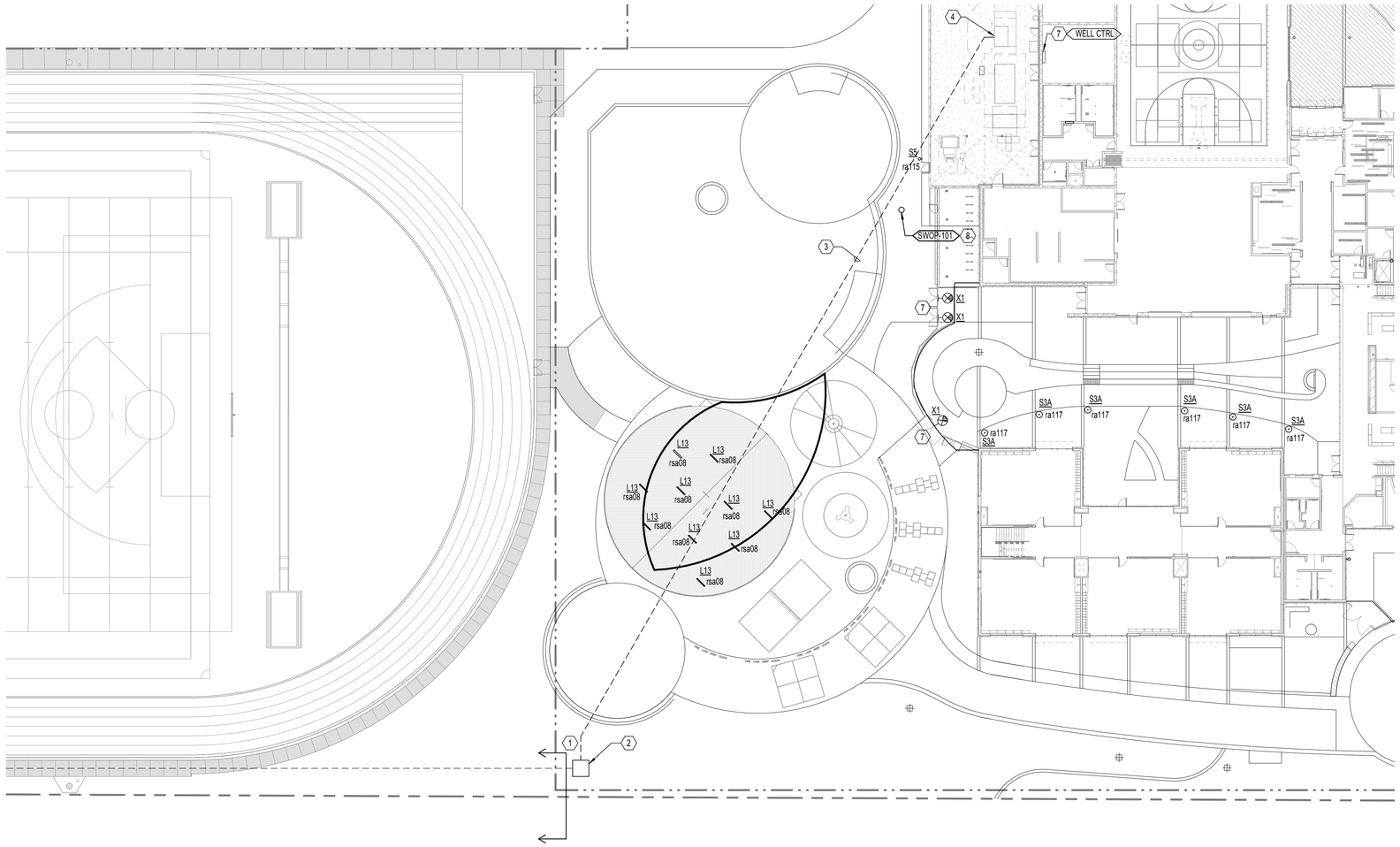

1 SITE PLAN - ELECTRICAL
1" = 20'-0"

GENERAL NOTES:

A. ELECTRICAL WORK SHOWN IS DIAGRAMMATIC AND IS MEANT TO REPRESENT GENERAL ROUTING AND EQUIPMENT LOCATIONS. NOT EVERY BEND, OFFSET, PULLBOX, ETC, IS SHOWN. CONTRACTOR SHALL PROVIDE ALL WORK REQUIRED FOR A COMPLETE INSTALLATION.

B. COORDINATE ALL UNDERGROUND SITE WORK WITH EXISTING AND NEW UTILITIES.

C. COORDINATE INSTALLATION OF NEW ELECTRICAL SERVICE WITH EWEB.

D. ALL BRANCH CIRCUITING AT BUILDING EXTERIOR AND SITE SHALL BE #10AWG MINIMUM, UNLESS OTHERWISE NOTED.

E. PROVIDE SEPARATE NEUTRAL CONDUCTOR FOR EACH BRANCH CIRCUIT.

F. REFER TO LIGHTING RELAY SCHEDULE ON SHEET E703 FOR ADDITIONAL INFORMATION.

G. PROVIDE NO MORE THAN (6) CURRENT CARRYING CONDUCTORS (INCLUDING NEUTRAL) PER HOMERUN.

H. PROVIDE CONNECTION TO EXIT SIGNS FROM THE NEAREST EMERGENCY CIRCUIT WITH AN UNSWITCHED LEG.

NOTES:

1. EXISTING 5 INCH CONDUIT WEST OF THIS AREA INSTALLED UNDER KELLY MIDDLE SCHOOL TRACK PROJECT. CONDUIT TO BE UTILIZED FOR NEW SERVICE TO HOWARD ELEMENTARY SCHOOL. EXTEND CONDUIT AS INDICATED.

2. SECTIONALIZING VAULT. PROVIDE UTILITY VAULT CO MODEL 575-FUSE-PCORP. REFERENCE EWEB DRAWINGS FOR ADDITIONAL INFORMATION.

3. PROVIDE ONE (1) 3 INCH CONDUIT.

4. TRANSFORMER VAULT. PROVIDE UTILITY VAULT CO MODEL 712-LA. REFERENCE EWEB DRAWINGS FOR ADDITIONAL INFORMATION.

5. NOT USED.

6. NOT USED.

7. PROVIDE 1 INCH CONDUIT FROM CENTER GATE POST TO MDF FOR ACCESS CONTROL CABLING.

8. PROVIDE (1) 2"C FROM PUMP TO CONTROLLER IN BOILER ROOM A119. PLUMBING CONTRACTOR TO PROVIDE AND INSTALL CONDUCTORS.

PIVOT ARCHITECTURE

REGISTERED PROFESSIONAL ENGINEER 11612 OREGON JULY 16, 1985 STEPHEN J. TURNA
EXPIRES: 6-30-16
10-23-14

PAE
Portland | San Francisco | Seattle
pae-engineers.com

HOWARD RECONCILED SET
EUGENE SCHOOL DISTRICT
700 HOWARD AVE, EUGENE, OREGON 97404
HOWARD ELEMENTARY SCHOOL

SITE PLAN - ELECTRICAL

PROJECT #	1306
ISSUE DATE:	10/28/2014
DRAWN:	AMT
CHECKED:	SJT

REVISIONS

E011

PRINTED ON: 10/23/2014 3:12:38 PM FROM FILE: C:\Revit Local Files\13-1532_HES MEP\4\13-1532_HES MEP14_stacy.hansen.rvt

© 2014 PIVOT ARCHITECTURE

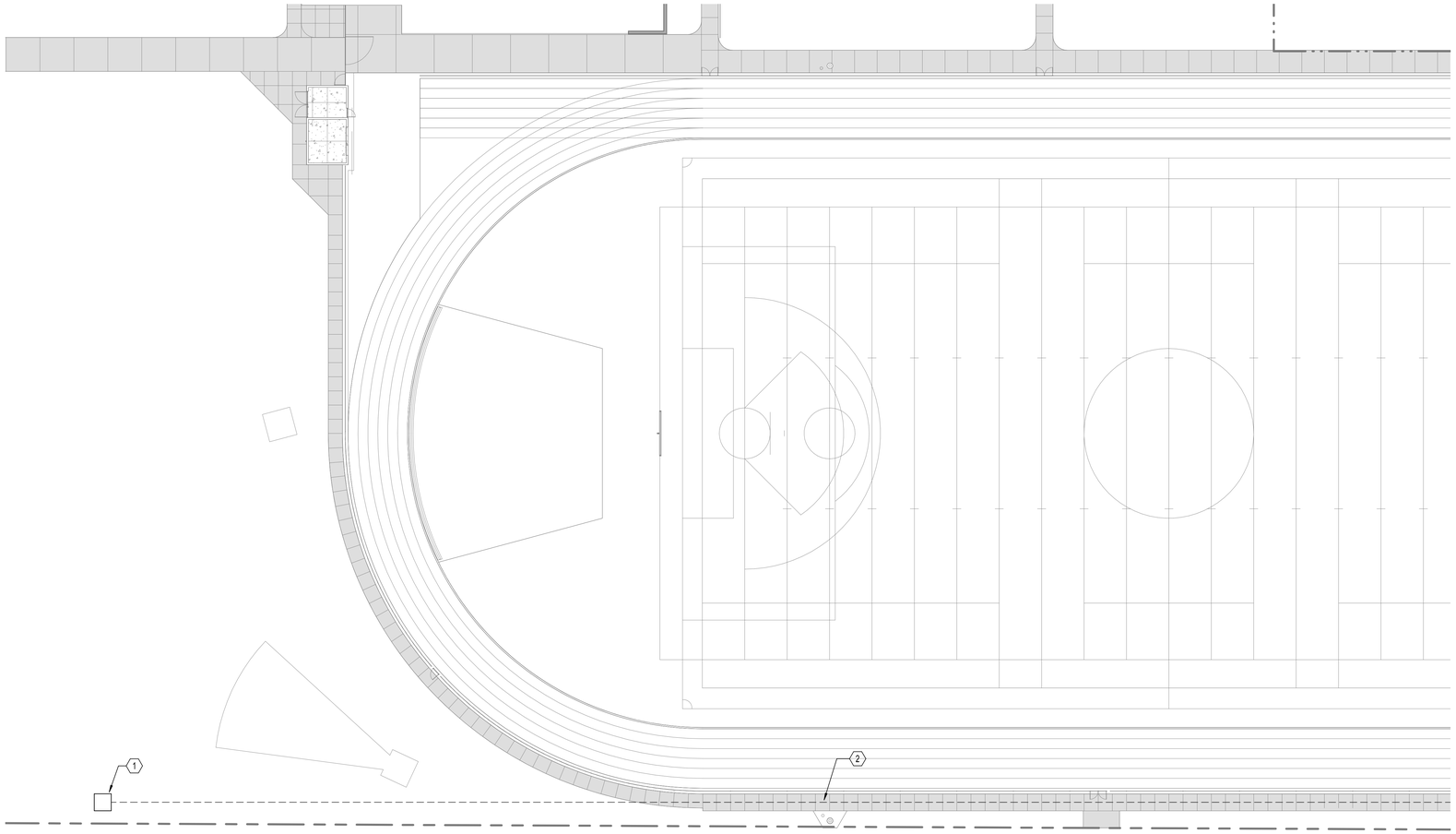

1 SITE PLAN - ELECTRICAL
1" = 20'-0"

NORTH

GENERAL NOTES:

A. ELECTRICAL WORK SHOWN IS DIAGRAMMATIC AND IS MEANT TO REPRESENT GENERAL ROUTING AND EQUIPMENT LOCATIONS. NOT EVERY BEND, OFFSET, PULLBOX, ETC, IS SHOWN. CONTRACTOR SHALL PROVIDE ALL WORK REQUIRED FOR A COMPLETE INSTALLATION.

B. COORDINATE ALL UNDERGROUND SITE WORK WITH EXISTING AND NEW UTILITIES.

NOTES:

1. APPROXIMATE LOCATION OF EXISTING EWB VAULT NO. V4052.

2. EXISTING 5 INCH CONDUIT INSTALLED UNDER KELLY MIDDLE SCHOOL TRACK PROJECT. CONDUIT TO BE UTILIZED FOR NEW SERVICE TO HOWARD ELEMENTARY SCHOOL.

PIVOT ARCHITECTURE

REGISTERED PROFESSIONAL ENGINEER
STEPHEN J. TURNA
OREGON
JULY 16, 1985
EXPIRES: 6-30-16
10-23-14

PAE
Portland | San Francisco | Seattle
pae-engineers.com

HOWARD RECONCILED SET
EUGENE SCHOOL DISTRICT
700 HOWARD AVE, EUGENE, OREGON 97404
HOWARD ELEMENTARY SCHOOL

SITE PLAN - ELECTRICAL

PROJECT #:	1336
ISSUE DATE:	10/28/2014
DRAWN:	AMT
CHECKED:	SJT
REVISIONS:	

E012

PRINTED ON: 10/23/2014 3:12:42 PM FROM FILE: C:\Revit Local Files\13-1532_HES MEP\13-1532_HES MEP14_stacy.hansen.rvt

© 2014 PIVOT ARCHITECTURE

GENERAL NOTES:

A. ELECTRICAL WORK SHOWN IS DIAGRAMMATIC AND IS MEANT TO REPRESENT GENERAL ROUTING AND EQUIPMENT LOCATIONS. NOT EVERY BEND, OFFSET, PULLBOX, ETC, IS SHOWN. CONTRACTOR SHALL PROVIDE ALL WORK REQUIRED FOR A COMPLETE INSTALLATION.

B. COORDINATE ALL UNDERGROUND SITE WORK WITH EXISTING AND NEW UTILITIES.

NOTES:

1. COORDINATE EXACT LOCATION OF CONDUIT STUB UPS WITH TELECOMMUNICATIONS DRAWINGS.

2. (1) 1"C STUB UP IN CABINET VOID.

3. REFERENCE SHEET E113 FOR CONTINUATION.

4. STUB UP IN WALL BASE. REFER TO TECHNOLOGY DRAWINGS FOR CONTINUATION.

5. REFERENCE SHEET E411 AND E412 FOR CONTINUATION.

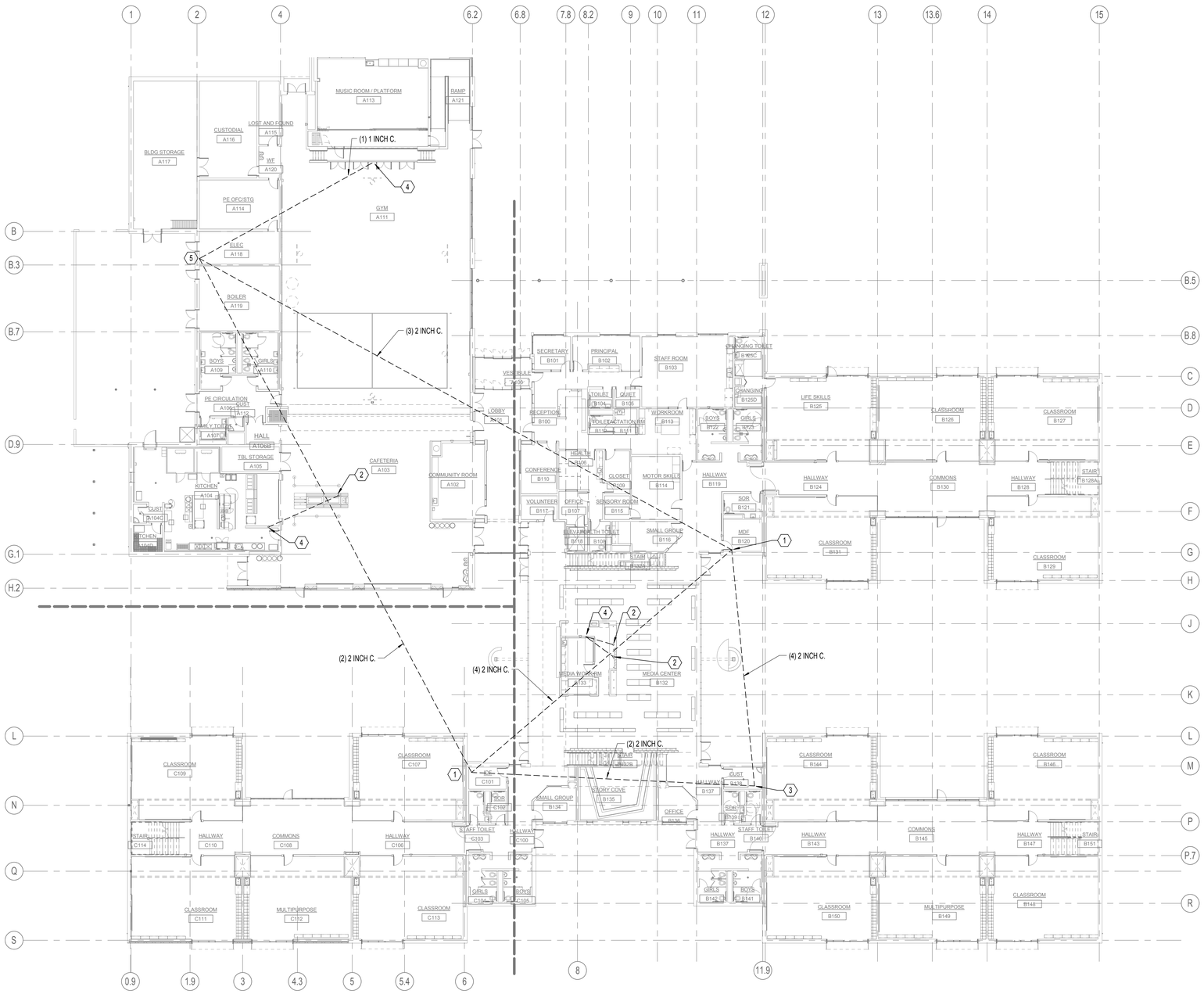

1 OVERALL ELECTRICAL PLAN - TELECOMMUNICATIONS

1/16" = 1'-0"

NORTH

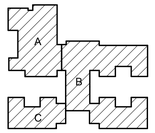

PIVOT ARCHITECTURE

REGISTERED PROFESSIONAL ENGINEER
STEPHEN J. TURNA
OREGON
JAN 16, 1987
EXPIRES: 6-30-16
10-23-14

PAE
Portland | San Francisco | Seattle
pae-engineers.com

HOWARD RECONCILED SET
EUGENE SCHOOL DISTRICT
700 HOWARD AVE, EUGENE, OREGON 97404
HOWARD ELEMENTARY SCHOOL

OVERALL ELECTRICAL PLAN - TELECOMMUNICATIONS

PROJECT #	1336
ISSUE DATE:	10/28/2014
DRAWN:	AMT
CHECKED:	SJT

REVISIONS

E013

PRINTED ON: 10/23/2014 3:12:49 PM FROM FILE: C:\Revit Local Files\13-1532_HES MEP\413-1532_HES MEP14_sibcy.hansen.rvt

© 2014 PIVOT ARCHITECTURE

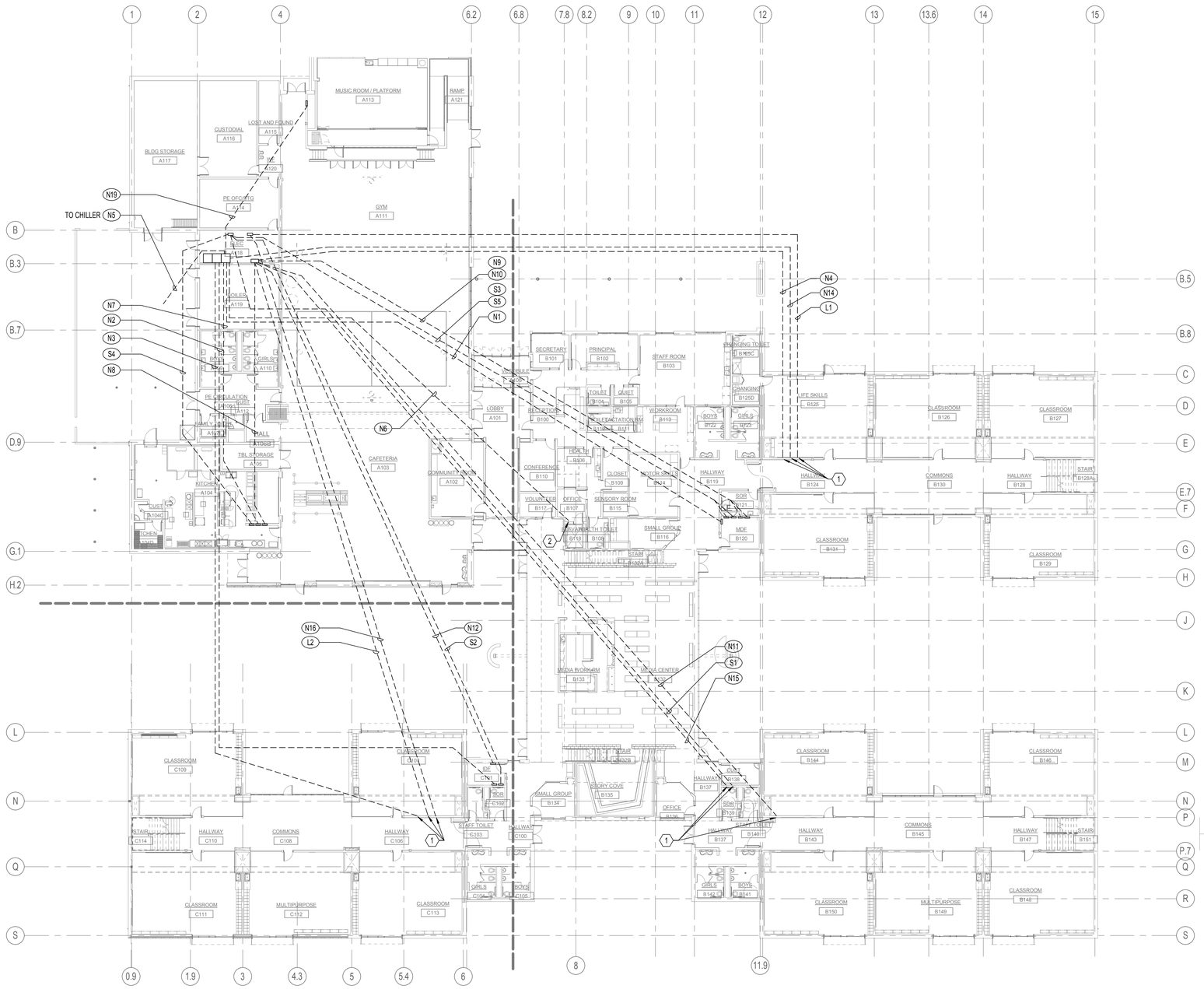

1 OVERALL ELECTRICAL PLAN - POWER
1/16" = 1'-0"

NORTH

GENERAL NOTES:

A. ALL UNDER SLAB CONDUITS TO BE COORDINATED WITH OTHER TRADES.

B. REFERENCE FLOOR PLANS FOR ADDITIONAL INFORMATION.

C. CONDUIT ROUTING SHOWN ON DRAWINGS IS DIAGRAMMATIC. CONDUITS TO BE ROUTED IN A DIRECT LINE. REFERENCE SPECIFICTION FOR ADDITIONAL INFORMATION.

NOTES:

1. CONDUITS TO BE ROUTED TO PANELS ON SECOND FLOOR.

2. STUB INTO ELEVATOR MACHINE ROOM.

Conduit ID	From Equipment	To Equipment
N1	MDP	41A1
N2	MDP	41C1
N3	MDP	42C1
N4	MDP	42A1
N5	MDP	CHILLER
N6	MDP	ELEVATOR
N7	MDP	4K1
N8	SDP	2K1
N9	SDP	21A1
N10	SDP	21A2
N11	SDP	21B1
N12	SDP	21C1
N14	SDP	22A1
N15	SDP	22B1
N16	SDP	22C1
N19	SDP	GYMNASIUM
L1	41LSD1	42LSA1
L2	41LSD1	42LSC1
S1	STDP	IDF-1
S2	STDP	IDF-2
S3	STDP	MDF
S4	STDP	21SBK1
S5	STDP	21SBA1

2 CONDUIT SCHEDULE
NONE

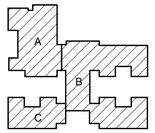

PIVOT ARCHITECTURE

REGISTERED PROFESSIONAL ENGINEER
STEPHEN J. TURNA
OREGON
JAN 16, 1987
EXPIRES: 6-30-16
10-23-14

PAE
Portland | San Francisco | Seattle
pae-engineers.com

HOWARD RECONCILED SET
EUGENE SCHOOL DISTRICT
700 HOWARD AVE, EUGENE, OREGON 97404
HOWARD ELEMENTARY SCHOOL

OVERALL ELECTRICAL PLAN - POWER

PROJECT #	1335
ISSUE DATE:	10/28/2014
DRAWN:	AMT
CHECKED:	SJT

REVISIONS

E014

PRINTED ON: 10/23/2014 3:12:58 PM FROM FILE: C:\Revit Local Files\13-1532_HES MEP\413-1532_HES MEP14_stacy.hansen.rvt

© 2014 PIVOT ARCHITECTURE

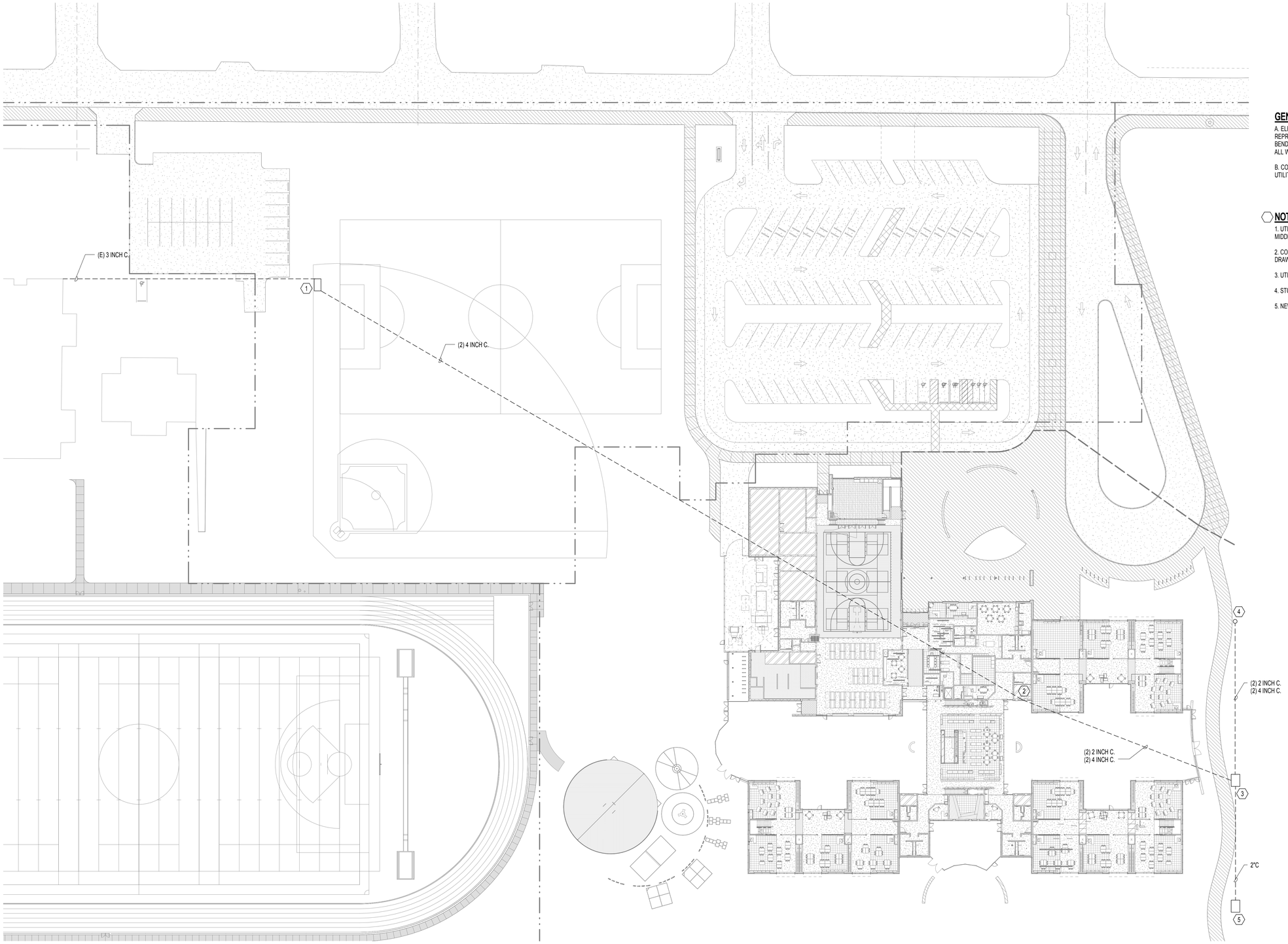

1 OVERALL SITE PLAN - TELECOMMUNICATIONS
1" = 30'-0"

GENERAL NOTES:

A. ELECTRICAL WORK SHOWN IS DIAGRAMMATIC AND IS MEANT TO REPRESENT GENERAL ROUTING AND EQUIPMENT LOCATIONS. NOT EVERY BEND, OFFSET, PULLBOX, ETC, IS SHOWN. CONTRACTOR SHALL PROVIDE ALL WORK REQUIRED FOR A COMPLETE INSTALLATION.

B. COORDINATE ALL UNDERGROUND SITE WORK WITH EXISTING AND NEW UTILITIES.

NOTES:

1. UTILITY VAULT CO. MODEL TA25 VAULT. INTERCEPT CONDUIT FROM KELLY MIDDLE SCHOOL.

2. COORDINATE CONDUIT STUB UP LOCATIONS WITH TELECOMMUNICATIONS DRAWINGS.

3. UTILITY VAULT CO. MODEL TA25 VAULT.

4. STUB CONDUITS UP AT BASE OF POLE.

5. NEW COMMUNICATION VAULT.

PIVOT ARCHITECTURE

REGISTERED PROFESSIONAL ENGINEER
161
OREGON
JULY 16, 1985
STEPHEN J. JURNA
EXPIRES: 6-30-16
10-23-14

PAE
Portland | San Francisco | Seattle
pae-engineers.com

HOWARD RECONCILED SET
EUGENE SCHOOL DISTRICT
700 HOWARD AVE, EUGENE, OREGON 97404
HOWARD ELEMENTARY SCHOOL

OVERALL SITE PLAN
TELECOMMUNICATIONS

PROJECT #	1330
ISSUE DATE:	10/28/2014
DRAWN:	AMT
CHECKED:	SJT

REVISIONS

E015

PRINTED ON: 10/23/2014 3:13:14 PM FROM FILE: C:\Revit Local Files\13-1532_HES MEP\4\13-1532_HES MEP14_stacy.hansen.rvt

© 2014 PIVOT ARCHITECTURE

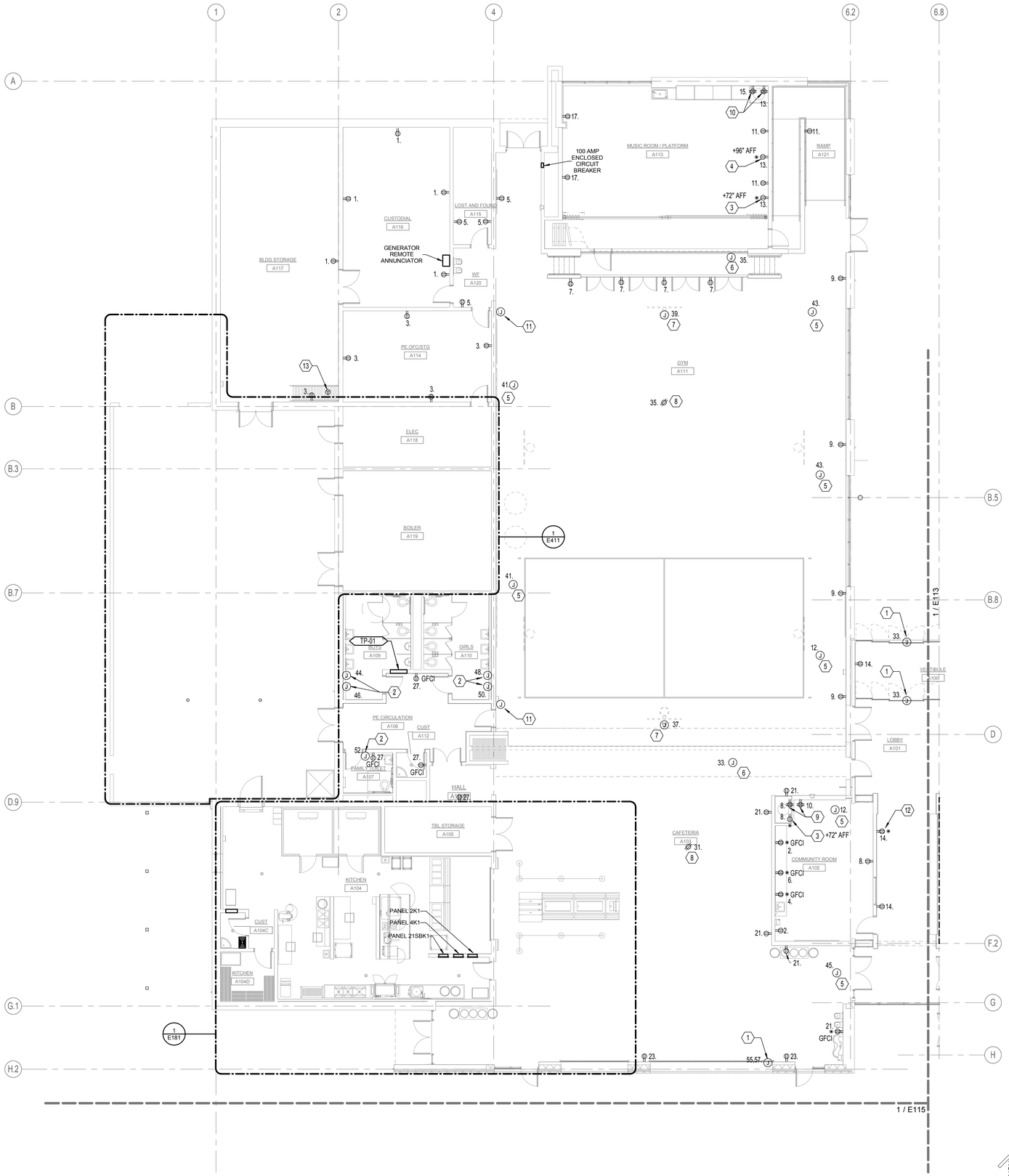

1 SECTOR A POWER PLAN - FIRST FLOOR
1/8" = 1'-0"

GENERAL NOTES:

A. REFERENCE SHEETS E013 AND E014 FOR UNDERGROUND CONDUITS FOR FEEDERS AND DATA CABLING.

B. COORDINATE ALL UNDERGROUND SITE WORK WITH EXISTING AND NEW UTILITIES.

C. ALL BRANCH CIRCUITING AT BUILDING EXTERIOR AND SITE SHALL BE #10AWG MINIMUM, UNLESS OTHERWISE NOTED.

D. PROVIDE SEPARATE NEUTRAL CONDUCTOR FOR EACH BRANCH CIRCUIT.

E. REFER TO LIGHTING RELAY SCHEDULE ON SHEET E703 FOR ADDITIONAL INFORMATION.

F. ALL RECEPTACLES SHOWN ON THIS SHEET SHALL BE PROVIDED WITH BRANCH CIRCUITS FROM PANEL '21D1,' UNLESS OTHERWISE NOTED.

G. ALL BRANCH CIRCUITING SHALL BE #10AWG., UNLESS OTHERWISE NOTED.

H. CONCEAL CONDUIT AND RECESS DEVICES IN CMU WALLS IN GYM, CAFETERIA, RAMP, MUSIC, KITCHEN, RESTROOMS AND PUBLIC SPACES. CONDUIT AND DEVICES MAY BE SURFACE MOUNTED ON CMU WALLS IN OTHER SPACES. DEVICE COVERS IN GYM TO BE IMPACT RESISTANT.

NOTES:

1. PROVIDE CONNECTION TO SECTIONAL DOORS.

2. PROVIDE CONNECTION TO HAND DRYER.

3. PROVIDE CONNECTION TO A/V EQUIPMENT LOCATED ABOVE CEILING. COORDINATE EXACT LOCATION WITH A/V DRAWINGS.

4. RECEPTACLE FOR SHORT THROW PROJECTOR.

5. MOTORIZED SHADE AT SKYLIGHT. COORDINATE EXACT LOCATION WITH ARCHITECT.

6. MOTORIZED PROJECTION SCREEN. COORDINATE MOUNTING HEIGHT WITH ARCHITECT.

7. MOTORIZED RETRACTABLE BASKETBALL HOOP.

8. CEILING MOUNTED RECEPTACLE FOR PROJECTOR. COORDINATE EXACT LOCATION WITH A/V DRAWINGS.

9. RECEPTACLES TO SERVE AUDIO EQUIPMENT. RECEPTACLES TO BE INSTALLED IN CABINETRY. COORDINATE EXACT LOCATION WITH ARCHITECT.

10. RECEPTACLES TO SERVE AUDIO EQUIPMENT. AUDIO EQUIPMENT TO BE INSTALLED IN A FREESTANDING RACK.

11. BASKETBALL HOOPS CONTROLLER.

12. RECEPTACLE FOR LCD DISPLAY SHALL BE MOUNTED AT 60" AFF.

13. KILN. PROVIDE 50A/2P, NEMA 6-50 RECEPTACLE, 2 - #6 CU, 1 - #10 CU GRD IN 1"C VIA SPD.

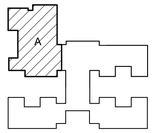

PIVOT ARCHITECTURE

REGISTERED PROFESSIONAL ENGINEER
STEPHEN J. TURNIA
OREGON
JULY 16, 1985
10-23-14
EXPIRES: 6-30-16

PAE
Portland | San Francisco | Seattle
pae-engineers.com

HOWARD RECONCILED SET
EUGENE SCHOOL DISTRICT
700 HOWARD AVE, EUGENE, OREGON 97404
HOWARD ELEMENTARY SCHOOL

SECTOR A POWER PLAN - FIRST FLOOR

PROJECT #	1306
ISSUE DATE:	10/28/2014
DRAWN:	AMT
CHECKED:	SJT

REVISIONS

E111

PRINTED ON: 10/23/2014 3:13:25 PM FROM FILE: C:\Revit Local Files\13-1532_HES MEP\14-13-1532_HES MEP14_stacy.hansen.rvt

© 2014 PIVOT ARCHITECTURE

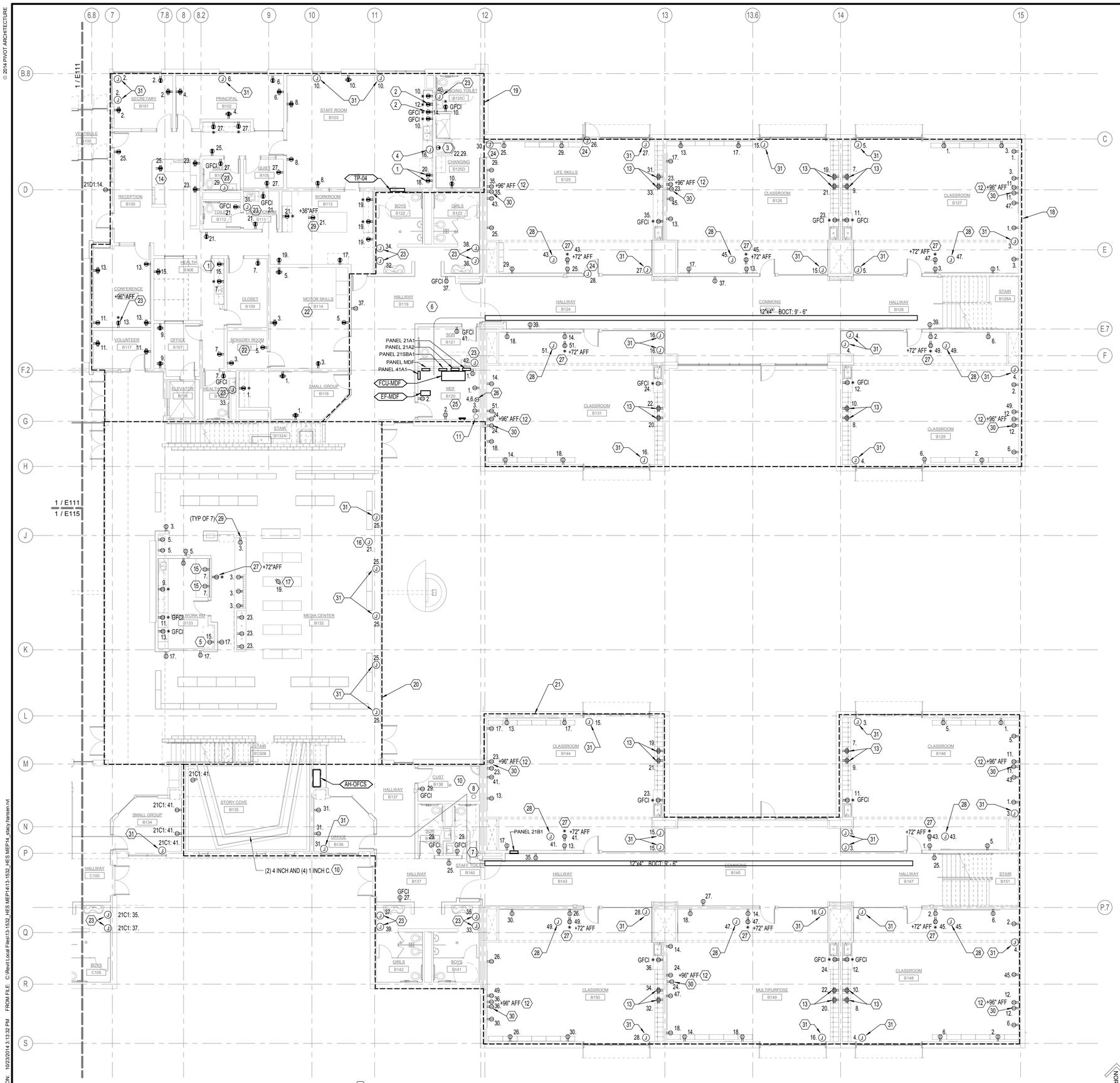

1 SECTOR B POWER PLAN - FIRST FLOOR

1/8" = 1'-0"

GENERAL NOTES:

A. REFERENCE SHEETS E013 AND E014 FOR UNDERGROUND CONDUITS FOR FEEDERS AND DATA CABLING.

B. AREA ABOVE ALL ELECTRICAL PANELS AND SWITCH BOARDS SHALL BE KEPT CLEAR OF ALL EQUIPMENT FOREIGN TO THE ELECTRICAL INSTALLATION INCLUDING PIPING, DUCTWORK, SUPPORTS, ETC. COORDINATE INSTALLATION WITH ALL OTHER TRADES.

C. ALL PENETRATIONS AND ROUTING PATHS OF EXPOSED CONDUIT SHALL BE COORDINATED AND REVIEWED BY ARCHITECT AND ENGINEER PRIOR TO INSTALLATION.

D. PROVIDE SEPARATE NEUTRAL CONDUCTOR FOR EACH BRANCH CIRCUIT, SHARED NEUTRALS ARE NOT PERMITTED.

E. PROVIDE NO MORE THAN (6) CURRENT CARRYING CONDUCTORS PER HOMERUN.

F. ALL BRANCH CIRCUITING SHALL BE #10AWG., UNLESS OTHERWISE NOTED.

G. REFER TO MECHANICAL EQUIPMENT CONNECTION SCHEDULE ON SHEET E702 FOR ADDITIONAL INFORMATION.

NOTES:

1. REFRIGERATOR.

2. MICROWAVE.

3. WASHER/DRYER. PROVIDE A NEMA 14-30R RECEPTACLE.

4. DISHWASHER.

5. COPIER.

6. PROVIDE (3) 4 INCH AND (2) 1 INCH CONDUITS FROM CABLE TRAY TO MDF B120. CONDUITS TO BE STUBBED OUT ABOVE CABLE TRAY. REFERENCE TELECOMMUNICATIONS DRAWINGS FOR MDF LAYOUT.

7. PROVIDE (3) 4 INCH AND (2) 2 INCH CONDUITS FROM CABLE TRAY TO CUST B138. CONDUITS TO BE STUBBED OUT NEAR CEILING.

8. PROVIDE (3) 4 INCH AND (2) 2 INCH CONDUIT SLEEVES UP TO IDF B238 ABOVE.

9. REFERENCE SHEET E013 FOR UNDERSLAB DATA CONDUIT ROUTING.

10. CONDUITS TO BE ROUTED FROM CEILING SPACE OF CUST B138 TO IDF C101.

11. PROVIDE (3) 4 INCH AND (2) 2 INCH CONDUIT SLEEVES UP TO WORKROOM B218 ABOVE.

12. RECEPTACLE FOR SHORT THROW PROJECTOR.

13. RECEPTACLE FOR TABLET CHARGING. RECEPTACLE TO BE INSTALLED IN CABINETRY. COORDINATE EXACT LOCATION WITH ARCHITECT.

14. RECEPTACLE TO BE MOUNTED IN CASEWORK.

15. RECEPTACLE TO BE MOUNTED IN KNEE SPACE.

16. MOTORIZED PROJECTION SCREEN. COORDINATE MOUNTING HEIGHT/LOCATION WITH ARCHITECT.

17. CEILING MOUNTED RECEPTACLE FOR PROJECTOR. COORDINATE EXACT LOCATION WITH A/V DRAWINGS.

18. ALL RECEPTACLES SHOWN IN THIS AREA SHALL BE PROVIDED WITH BRANCH CIRCUITS FROM PANEL '21A1', UNLESS OTHERWISE NOTED.

19. ALL RECEPTACLES DESIGNATED AS EMERGENCY IN THIS AREA SHALL BE PROVIDED WITH BRANCH CIRCUITS FROM PANEL '21SBA1', UNLESS OTHERWISE NOTED.

20. ALL RECEPTACLES SHOWN IN THIS AREA SHALL BE PROVIDED WITH BRANCH CIRCUITS FROM PANEL '21A2', UNLESS OTHERWISE NOTED.

21. ALL RECEPTACLES SHOWN IN THIS AREA SHALL BE PROVIDED WITH BRANCH CIRCUITS FROM PANEL '21B1', UNLESS OTHERWISE NOTED.

22. ALL RECEPTACLES IN THIS ROOM TO BE INSTALLED AT +48" AFF.

23. PROVIDE CONNECTION TO HAND DRYER.

24. PROVIDE CONNECTION TO ADA DOOR MOTOR AND OPERATORS. COORDINATE EXACT LOCATIONS OF DOOR OPERATORS WITH ARCHITECT.

25. ALL RECEPTACLES IN MDF B120 SHALL BE PROVIDED WITH BRANCH CIRCUITS FROM PANEL ' MDF', UNLESS OTHERWISE NOTED.

26. PROVIDE A NEMA L6-30 CENTER ABOVE THE IT RACK. COORDINATE EXACT LOCATION WITH IT CONSULTANT.

27. RECEPTACLE TO SERVE VIDEO MONITOR.

28. PROVIDE CONNECTION TO A/V EQUIPMENT LOCATED ABOVE CEILING. COORDINATE EXACT LOCATION WITH A/V DRAWINGS.

29. ROUTE HOMERUN CONDUIT UNDER SLAB TO NEAREST WALL. RECEPTACLE TO BE MOUNTED ON SIDE OF CABINET. COORDINATE MOUNTING AND ADDITIONAL REQUIREMENTS WITH ARCHITECT.

30. RECEPTACLE FOR MONITOR SHALL BE MOUNTED AT 60" AFF, BELOW PROJECTOR RECEPTACLE.

31. PROVIDE CONNECTION TO MOTORIZED ROLLER SHADES. COORDINATE WITH MANUFACTURER FOR ADDITIONAL REQUIREMENTS.

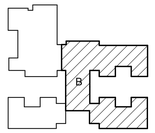

PIVOT ARCHITECTURE

REGISTERED PROFESSIONAL ARCHITECT 1161 OREGON JAN 16, 1987 STEPHEN J. TURNA
EXPIRES: 6-30-16
10-23-14

PAE
Portland | San Francisco | Seattle
pae-engineers.com

HOWARD RECONCILED SET
EUGENE SCHOOL DISTRICT
700 HOWARD AVE, EUGENE, OREGON 97404
HOWARD ELEMENTARY SCHOOL

SECTOR B POWER PLAN - FIRST FLOOR

PROJECT #:	1330
ISSUE DATE:	10/28/2014
DRAWN:	AMT
CHECKED:	SJT

REVISIONS

E113

PRINTED ON: 10/23/2014 3:13:32 PM FROM FILE: C:\Revit Local Files\13-1532_HES MEP14\13-1532_HES MEP14_alacy.hansen.rvt

© 2014 PIVOT ARCHITECTURE

GENERAL NOTES:

A. REFERENCE SHEETS E013 AND E014 FOR UNDERGROUND CONDUITS FOR FEEDERS AND DATA CABLING.

B. AREA ABOVE ALL ELECTRICAL PANELS AND SWITCH BOARDS SHALL BE KEPT CLEAR OF ALL EQUIPMENT FOREIGN TO THE ELECTRICAL INSTALLATION INCLUDING PIPING, DUCTWORK, SUPPORTS, ETC. COORDINATE INSTALLATION WITH ALL OTHER TRADES.

C. ALL PENETRATIONS AND ROUTING PATHS OF EXPOSED CONDUIT SHALL BE COORDINATED AND REVIEWED BY ARCHITECT AND ENGINEER PRIOR TO INSTALLATION.

D. PROVIDE SEPARATE NEUTRAL CONDUCTOR FOR EACH BRANCH CIRCUIT, SHARED NEUTRALS ARE NOT PERMITTED.

E. PROVIDE NO MORE THAN (6) CURRENT CARRYING CONDUCTORS PER HOMERUN.

F. ALL RECEPTACLES SHOWN ON THIS SHEET SHALL BE PROVIDED WITH BRANCH CIRCUITS FROM PANEL '21C1', UNLESS OTHERWISE NOTED.

G. ALL BRANCH CIRCUITING SHALL BE #10AWG., UNLESS OTHERWISE NOTED.

H. REFER TO MECHANICAL EQUIPMENT CONNECTION SCHEDULE ON SHEET E702 FOR ADDITIONAL INFORMATION.

NOTES:

1. RECEPTACLE FOR SHORT THROW PROJECTOR.

2. CONDUITS TO BE ROUTED FROM CEILING SPACE OF IDF C101 TO CUST B138.

3. PROVIDE (3) 4 INCH AND (2) 2 INCH CONDUIT SLEEVES UP TO CUST C201 ABOVE.

4. PROVIDE (3) 4 INCH AND (2) 2 INCH CONDUITS FROM CABLE TRAY TO IDF C101. CONDUITS TO BE STUBBED OUT NEAR CEILING.

5. RECEPTACLE FOR TABLET CHARGING. RECEPTACLE TO BE INSTALLED IN CABINETRY. COORDINATE EXACT LOCATION WITH ARCHITECT.

6. PROVIDE CONNECTION TO HAND DRYER.

7. ALL RECEPTACLES IN IDF C101 SHALL BE PROVIDED WITH BRANCH CIRCUITS FROM PANEL 'IDF-2', UNLESS OTHERWISE NOTED.

8. PROVIDE A NEMA L6-30 CENTER ABOVE THE IT RACK. COORDINATE EXACT LOCATION WITH IT CONSULTANT.

9. RECEPTACLE TO SERVE VIDEO MONITOR.

10. PROVIDE CONNECTION TO A/V EQUIPMENT LOCATED ABOVE CEILING. COORDINATE EXACT LOCATION WITH A/V DRAWINGS.

11. PROVIDE CONNECTION TO FSD. REFER TO MECHANICAL DRAWINGS FOR ADDITIONAL INFORMATION.

12. RECEPTACLE FOR MONITOR SHALL BE MOUNTED AT 60" AFF, BELOW PROJECTOR RECEPTACLE.

13. PROVIDE CONNECTION TO MOTORIZED ROLLER SHADES. COORDINATE WITH MANUFACTURER FOR ADDITIONAL REQUIREMENTS.

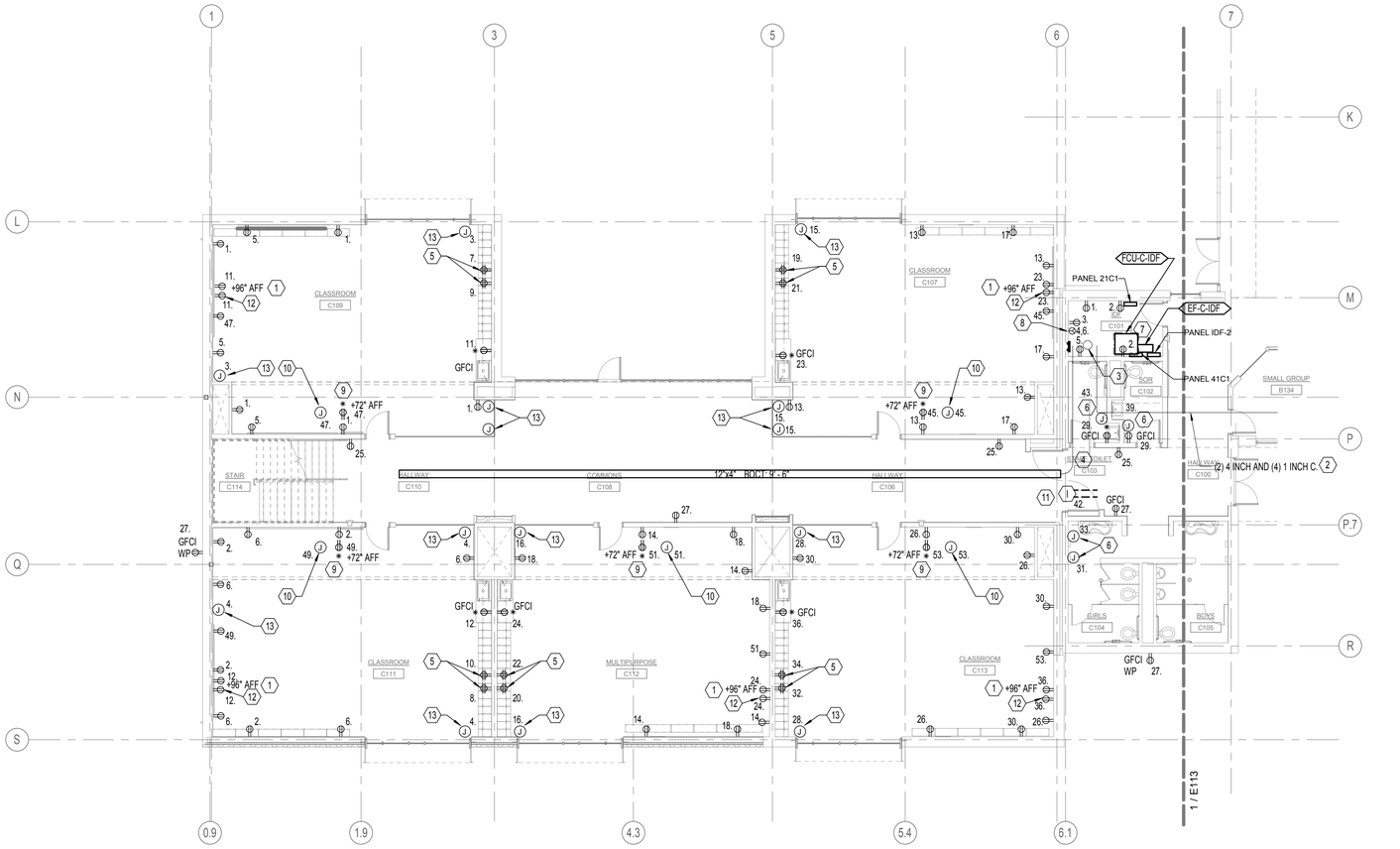

1 SECTOR C POWER PLAN - FIRST FLOOR
1/8" = 1'-0"

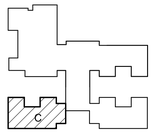

PIVOT ARCHITECTURE

REGISTERED PROFESSIONAL ENGINEER
STEPHEN J. TURNIA
OREGON
JAN 16, 1987
10-23-14
EXPIRES: 6-30-16

PAE
Portland | San Francisco | Seattle
pae-engineers.com

HOWARD RECONCILED SET
EUGENE SCHOOL DISTRICT
700 HOWARD AVE, EUGENE, OREGON 97404
HOWARD ELEMENTARY SCHOOL

SECTOR C POWER PLAN - FIRST FLOOR

PROJECT #	1336
ISSUE DATE:	10/28/2014
DRAWN:	AMT
CHECKED:	SJT

REVISIONS:

E115

PRINTED ON: 10/23/2014 3:13:38 PM FROM FILE: C:\Revit Local Files\13-1532_HES MEP14\13-1532_HES MEP14_stacy.hansen.rvt

© 2014 PIVOT ARCHITECTURE

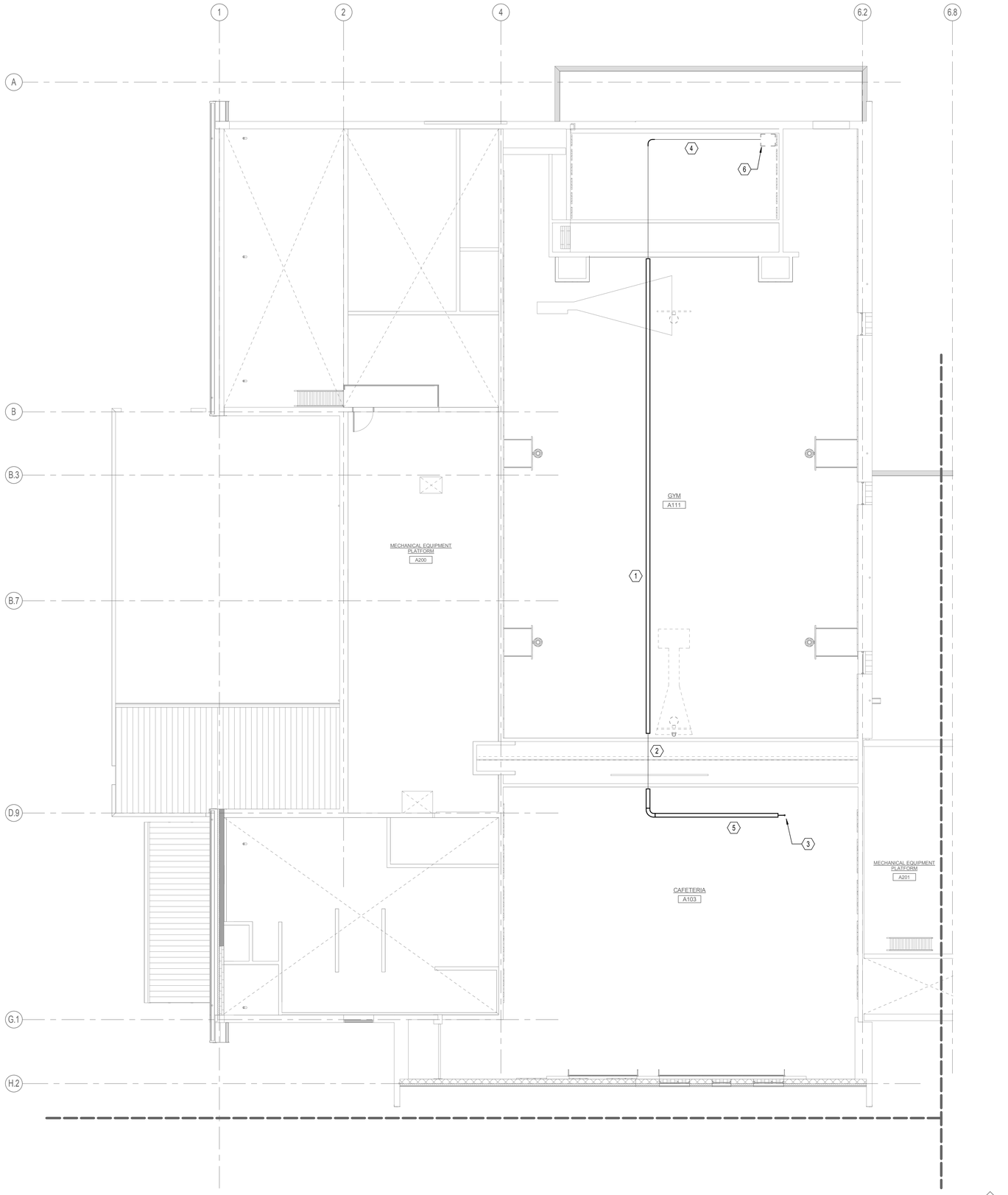

1 SECTOR A POWER PLAN - SECOND FLOOR
1/8" = 1'-0"

GENERAL NOTES:

A. REFERENCE SHEETS E013 AND E014 FOR UNDERGROUND CONDUITS FOR FEEDERS AND DATA CABLING.

B. AREA ABOVE ALL ELECTRICAL PANELS AND SWITCH BOARDS SHALL BE KEPT CLEAR OF ALL EQUIPMENT FOREIGN TO THE ELECTRICAL INSTALLATION INCLUDING PIPING, DUCTWORK, SUPPORTS, ETC. COORDINATE INSTALLATION WITH ALL OTHER TRADES.

C. ALL PENETRATIONS AND ROUTING PATHS OF EXPOSED CONDUIT SHALL BE COORDINATED AND REVIEWED BY ARCHITECT AND ENGINEER PRIOR TO INSTALLATION.

D. PROVIDE SEPARATE NEUTRAL CONDUCTOR FOR EACH BRANCH CIRCUIT, SHARED NEUTRALS ARE NOT PERMITTED.

E. PROVIDE NO MORE THAN (6) CURRENT CARRYING CONDUCTORS PER HOMERUN.

NOTES:

1. 8 INCH BY 2 INCH BASKET CABLE TRAY. INSTALL ADJACENT TO DUCTWORK.

2. TWO (2) 3 INCH CONDUITS THROUGH DIVIDING WALL SOFFIT. COORDINATE ROUTING WITH DUCTWORK.

3. TWO (2) 2 INCH CONDUITS DOWN TO AUDIO EQUIPMENT IN CABINETRY.

4. TWO (2) CONDUITS TO AUDIO EQUIPMENT RACK.

5. 8 INCH BY 2 INCH BASKET CABLE TRAY.

6. APPROXIMATE LOCATION OF AUDIO EQUIPMENT RACK BELOW.

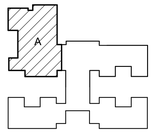

PIVOT ARCHITECTURE

REGISTERED PROFESSIONAL ENGINEER
11612
OREGON
JUL 16, 1985
STEPHEN J. TURNIA
10-23-14
EXPIRES: 6-30-16

PAE
Portland | San Francisco | Seattle
pae-engineers.com

HOWARD RECONCILED SET
EUGENE SCHOOL DISTRICT
700 HOWARD AVE, EUGENE, OREGON 97404
HOWARD ELEMENTARY SCHOOL

SECTOR A POWER PLAN - SECOND FLOOR

PROJECT #	1.538
ISSUE DATE:	10/28/2014
DRAWN:	AMT
CHECKED:	SJT

REVISIONS:

E121

PRINTED ON: 10/23/2014 3:13:43 PM FROM FILE: C:\Revit Local Files\13-1532_HES MEP14\13-1532_HES MEP14_stacy.hansen.rvt

© 2014 PIVOT ARCHITECTURE

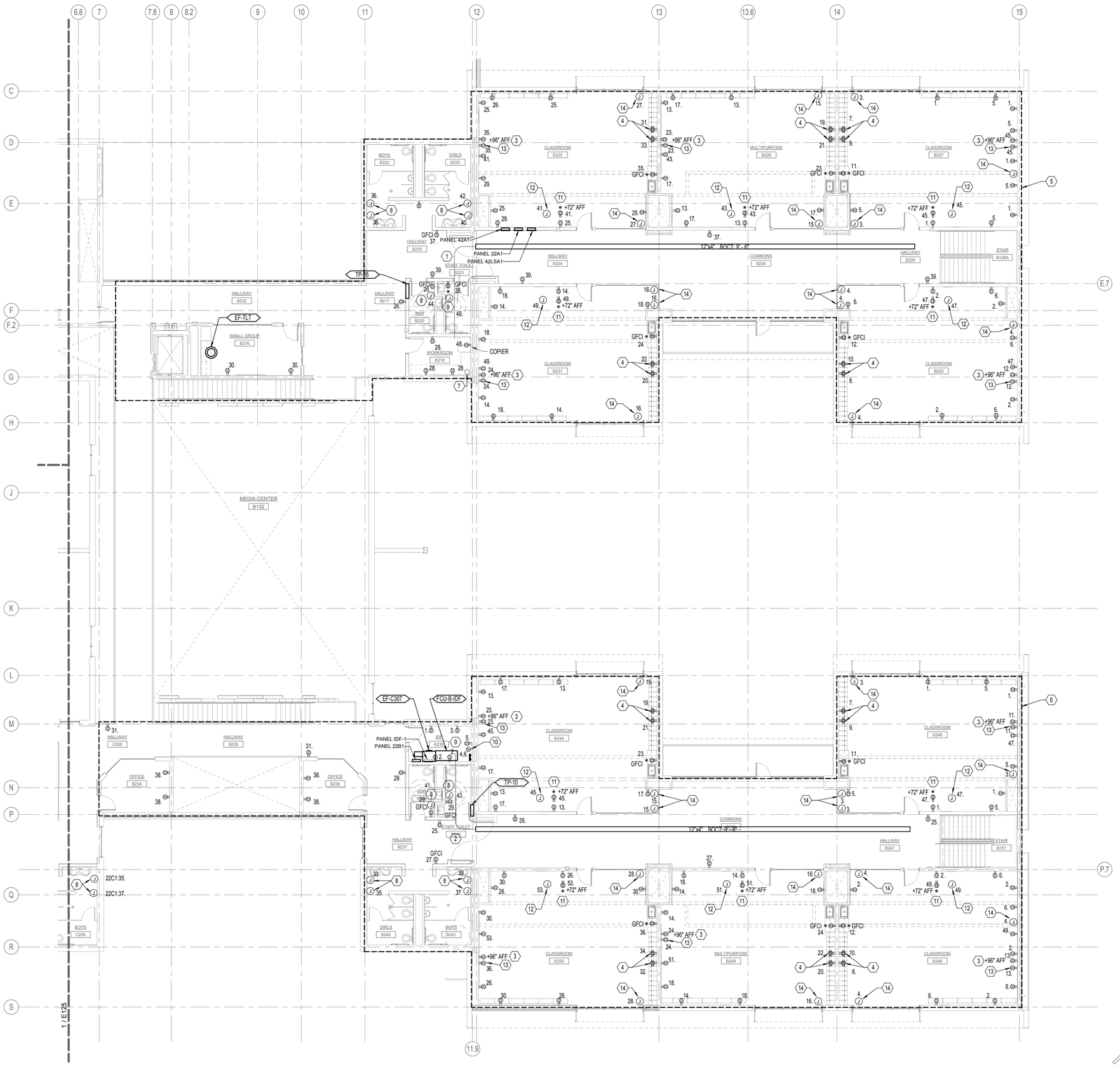

1 SECTOR B POWER PLAN - SECOND FLOOR

1/8" = 1'-0"

GENERAL NOTES:

A. REFERENCE SHEETS E013 AND E014 FOR UNDERGROUND CONDUITS FOR FEEDERS AND DATA CABLING.

B. AREA ABOVE ALL ELECTRICAL PANELS AND SWITCH BOARDS SHALL BE KEPT CLEAR OF ALL EQUIPMENT FOREIGN TO THE ELECTRICAL INSTALLATION INCLUDING PIPING, DUCTWORK, SUPPORTS, ETC. COORDINATE INSTALLATION WITH ALL OTHER TRADES.

C. ALL PENETRATIONS AND ROUTING PATHS OF EXPOSED CONDUIT SHALL BE COORDINATED AND REVIEWED BY ARCHITECT AND ENGINEER PRIOR TO INSTALLATION.

D. PROVIDE SEPARATE NEUTRAL CONDUCTOR FOR EACH BRANCH CIRCUIT, SHARED NEUTRALS ARE NOT PERMITTED.

E. PROVIDE NO MORE THAN (6) CURRENT CARRYING CONDUCTORS PER HOMERUN.

F. ALL BRANCH CIRCUITING SHALL BE #10AWG., UNLESS OTHERWISE NOTED.

G. REFER TO MECHANICAL EQUIPMENT CONNECTION SCHEDULE ON SHEET E702 FOR ADDITIONAL INFORMATION.

NOTES:

1. PROVIDE (3) 4 INCH AND (2) 2 INCH CONDUITS FROM CABLE TRAY TO WORKROOM B218. CONDUITS TO BE STUBBED OUT ABOVE ACCESSIBLE CEILING.

2. PROVIDE (3) 4 INCH AND (2) 2 INCH CONDUITS FROM CABLE TRAY TO IDF B238. CONDUITS TO BE STUBBED OUT NEAR CEILING.

3. RECEPTACLE FOR SHORT THROW PROJECTOR.

4. RECEPTACLE FOR TABLET CHARGING. RECEPTACLE TO BE INSTALLED IN CABINETRY. COORDINATE EXACT LOCATION WITH ARCHITECT.

5. ALL RECEPTACLES SHOWN IN THIS AREA SHALL BE PROVIDED WITH BRANCH CIRCUITS FROM PANEL '22A1', UNLESS OTHERWISE NOTED.

6. ALL RECEPTACLES SHOWN IN THIS AREA SHALL BE PROVIDED WITH BRANCH CIRCUITS FROM PANEL '22B1', UNLESS OTHERWISE NOTED.

7. (3) 4 INCH AND (2) 2 INCH SLEEVES FROM MDF BELOW.

8. PROVIDE CONNECTION TO HAND DRYER.

9. ALL RECEPTACLES IN IDF B238 SHALL BE PROVIDED WITH BRANCH CIRCUITS FROM PANEL 'IDF-1', UNLESS OTHERWISE NOTED.

10. PROVIDE A NEMA L6-30 CENTER ABOVE THE IT RACK. COORDINATE EXACT LOCATION WITH IT CONSULTANT.

11. RECEPTACLE TO SERVE VIDEO MONITOR.

12. PROVIDE CONNECTION TO A/V EQUIPMENT LOCATED ABOVE CEILING. COORDINATE EXACT LOCATION WITH A/V DRAWINGS.

13. RECEPTACLE FOR MONITOR SHALL BE MOUNTED AT 60" AFF, BELOW PROJECTOR RECEPTACLE.

14. PROVIDE CONNECTION TO MOTORIZED ROLLER SHADES. COORDINATE WITH MANUFACTURER FOR ADDITIONAL REQUIREMENTS.

PIVOT ARCHITECTURE

REGISTERED PROFESSIONAL ENGINEER 11612 OREGON JAN 16, 1987 STEPHEN J. TURNA

10-23-14

EXPIRES: 6-30-16

PAE
Portland | San Francisco | Seattle
pae-engineers.com

HOWARD RECONCILED SET
EUGENE SCHOOL DISTRICT
700 HOWARD AVE, EUGENE, OREGON 97404
HOWARD ELEMENTARY SCHOOL

SECTOR B POWER PLAN - SECOND FLOOR

PROJECT #:	1.1305
ISSUE DATE:	10/28/2014
DRAWN:	AMT
CHECKED:	SJT

REVISIONS

E123

PRINTED ON: 10/23/2014 3:13:49 PM FROM FILE: C:\Revit Local Files\13-1532_HES MEP\4113-1532_HES MEP14_stacy.hansen.rvt

© 2014 PIVOT ARCHITECTURE

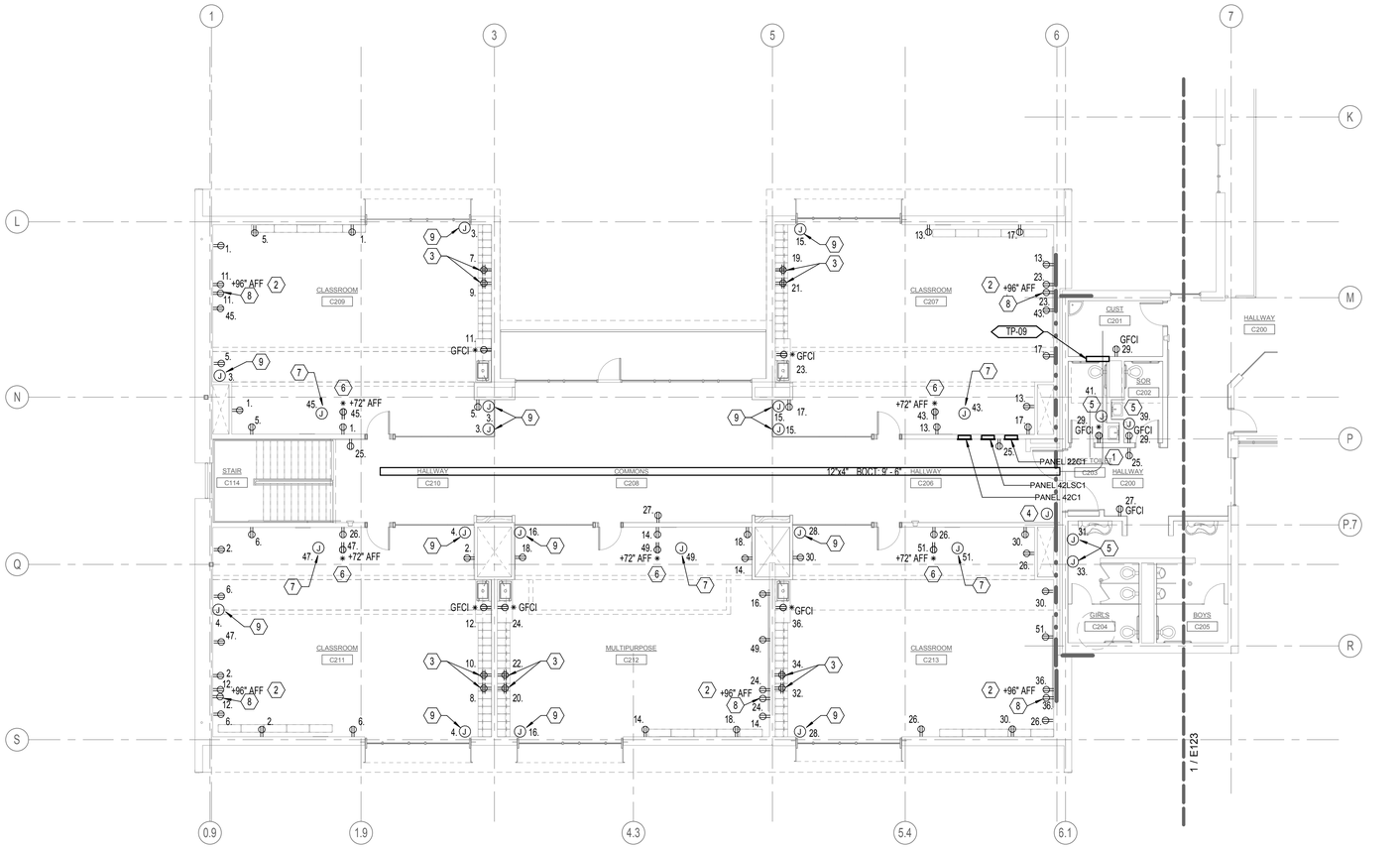

1 SECTOR C POWER PLAN - SECOND FLOOR
1/8" = 1'-0"

GENERAL NOTES:

A. REFERENCE SHEETS E013 AND E014 FOR UNDERGROUND CONDUITS FOR FEEDERS AND DATA CABLING.

B. AREA ABOVE ALL ELECTRICAL PANELS AND SWITCH BOARDS SHALL BE KEPT CLEAR OF ALL EQUIPMENT FOREIGN TO THE ELECTRICAL INSTALLATION INCLUDING PIPING, DUCTWORK, SUPPORTS, ETC. COORDINATE INSTALLATION WITH ALL OTHER TRADES.

C. ALL PENETRATIONS AND ROUTING PATHS OF EXPOSED CONDUIT SHALL BE COORDINATED AND REVIEWED BY ARCHITECT AND ENGINEER PRIOR TO INSTALLATION.

D. PROVIDE SEPARATE NEUTRAL CONDUCTOR FOR EACH BRANCH CIRCUIT, SHARED NEUTRALS ARE NOT PERMITTED.

E. PROVIDE NO MORE THAN (6) CURRENT CARRYING CONDUCTORS PER HOMERUN.

F. ALL RECEPTACLES SHOWN ON THIS SHEET SHALL BE PROVIDED WITH BRANCH CIRCUITS FROM PANEL '22C1', UNLESS OTHERWISE NOTED.

G. ALL BRANCH CIRCUITING SHALL BE #10AWG., UNLESS OTHERWISE NOTED.

H. REFER TO MECHANICAL EQUIPMENT CONNECTION SCHEDULE ON SHEET E702 FOR ADDITIONAL INFORMATION.

NOTES:

1. PROVIDE (3) 4 INCH AND (2) 2 INCH CONDUITS FROM CABLE TRAY TO CUST C201. CONDUITS TO BE STUBBED OUT NEAR CEILING.

2. RECEPTACLE FOR SHORT THROW PROJECTOR.

3. RECEPTACLE FOR TABLET CHARGING. RECEPTACLE TO BE INSTALLED IN CABINETRY. COORDINATE EXACT LOCATION WITH ARCHITECT.

4. PROVIDE CONNECTION TO FIRE/SMOKE DAMPER.

5. PROVIDE CONNECTION TO HAND DRYER.

6. RECEPTACLE TO SERVE VIDEO MONITOR.

7. PROVIDE CONNECTION TO A/V EQUIPMENT LOCATED ABOVE CEILING. COORDINATE EXACT LOCATION WITH A/V DRAWINGS.

8. RECEPTACLE FOR MONITOR SHALL BE MOUNTED AT 60" AFF, BELOW PROJECTOR RECEPTACLE.

9. PROVIDE CONNECTION TO MOTORIZED ROLLER SHADES. COORDINATE WITH MANUFACTURER FOR ADDITIONAL REQUIREMENTS.

PIVOT ARCHITECTURE

REGISTERED PROFESSIONAL ENGINEER
STEPHEN J. TURNA
OREGON
JULY 16, 1985
EXPIRES: 6-30-16
10-23-14

PAE
Portland | San Francisco | Seattle
pae-engineers.com

HOWARD RECONCILED SET
EUGENE SCHOOL DISTRICT
700 HOWARD AVE, EUGENE, OREGON 97404
HOWARD ELEMENTARY SCHOOL

SECTOR C POWER PLAN - SECOND FLOOR

PROJECT #	1.536
ISSUE DATE:	10/28/2014
DRAWN:	AMT
CHECKED:	SJT
REVISIONS:	

E125

PRINTED ON: 10/23/2014 3:13:54 PM FROM FILE: C:\Revit Local Files\13-1532_HES MEP14\13-1532_HES MEP14_stacy.hansen.rvt

© 2014 PIVOT ARCHITECTURE

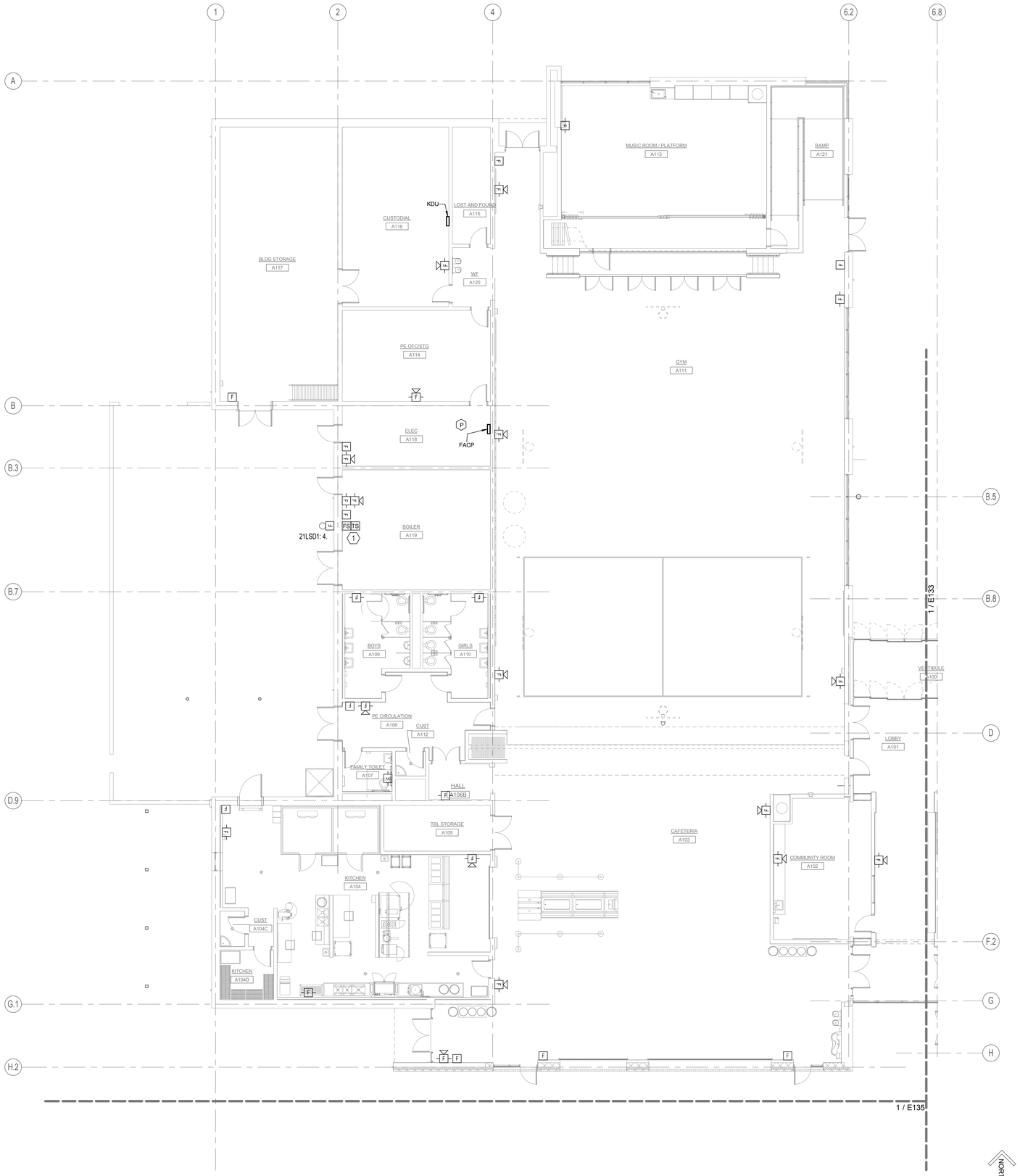

1 SECTOR A FIRE ALARM PLAN - FIRST FLOOR
1/8" = 1'-0"

GENERAL NOTES:

A. THE FIRE ALARM SYSTEM IS A CONTRACTOR DESIGN-BUILD SYSTEM. DEVICE LOCATIONS AND QUANTITIES SHOWN ARE PREFERRED; HOWEVER, ADDITIONAL DEVICES MAY BE REQUIRED TO COMPLY WITH CODE. CONTRACTOR SHALL PROVIDE ADDITIONAL FIRE ALARM DEVICES, ACCESSORIES AND ANY ADDITIONAL ITEMS REQUIRED FOR A COMPLETE AND OPERATIONAL CODE COMPLIANT SYSTEM. REFERENCE SPECIFICATION DIVISION 28 30 00 FOR ADDITIONAL INFORMATION.

B. CONCEAL CONDUIT AND RECESS DEVICES IN CMU WALLS IN GYM, CAFETERIA, RAMP, MUSIC, KITCHEN, RESTROOMS AND PUBLIC SPACES. CONDUIT AND DEVICES MAY BE SURFACE MOUNTED ON CMU WALLS IN OTHER SPACES.

C. FIRE ALARM DEVICES LOCATED IN GYM SHALL BE PROVIDED WITH IMPACT RESISTANT COVERS.

NOTES:

1. COORDINATE QUANTITY AND LOCATION OF FIRE SPRINKLER FLOW AND TAMPER SWITCHES WITH FIRE SPRINKLER CONTRACTOR.

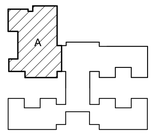

PIVOT ARCHITECTURE

REGISTERED PROFESSIONAL ENGINEER
OREGON
JUL 16, 1982
STEPHEN J. TURNA
10-23-14
EXPIRES: 6-30-16

PAE
Portland | San Francisco | Seattle
pae-engineers.com

HOWARD RECONCILED SET
EUGENE SCHOOL DISTRICT
700 HOWARD AVE, EUGENE, OREGON 97404
HOWARD ELEMENTARY SCHOOL

SECTOR A FIRE ALARM PLAN - FIRST FLOOR

PROJECT #:	1130
ISSUE DATE:	10/28/2014
DRAWN:	AMT
CHECKED:	SJT

REVISIONS

E131

PRINTED ON: 10/23/2014 3:13:57 PM FROM FILE: C:\Revit Local Files\13-1532_HES MEP\4\13-1532_HES MEP14_stacy.hansen.rvt

© 2014 PIVOT ARCHITECTURE

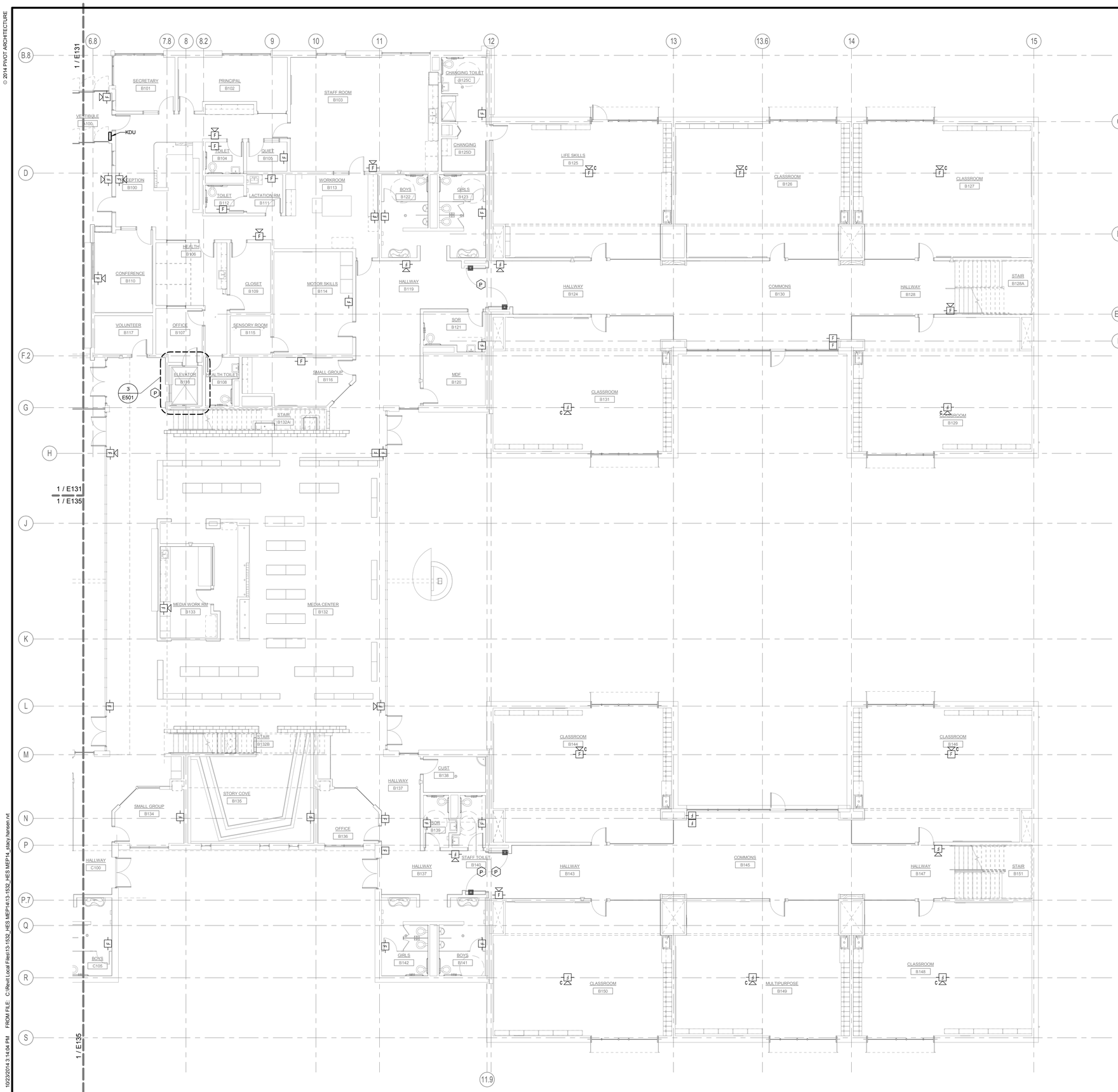

1 SECTOR B FIRE ALARM PLAN - FIRST FLOOR
1/8" = 1'-0"

GENERAL NOTES:

A. THE FIRE ALARM SYSTEM IS A CONTRACTOR DESIGN-BUILD SYSTEM. DEVICE LOCATIONS AND QUANTITIES SHOWN ARE PREFERRED; HOWEVER, ADDITIONAL DEVICES MAY BE REQUIRED TO COMPLY WITH CODE. CONTRACTOR SHALL PROVIDE ADDITIONAL FIRE ALARM DEVICES, ACCESSORIES AND ANY ADDITIONAL ITEMS REQUIRED FOR A COMPLETE AND OPERATIONAL CODE COMPLIANT SYSTEM. REFERENCE SPECIFICATION DIVISION 28 30 00 FOR ADDITIONAL INFORMATION.

PIVOT ARCHITECTURE

REGISTERED PROFESSIONAL ENGINEER 11612 OREGON JULY 16, 1982 STEPHEN J. TURNIA
10-23-14
EXPIRES: 6-30-16

PAE
Portland | San Francisco | Seattle
pae-engineers.com

HOWARD RECONCILED SET
EUGENE SCHOOL DISTRICT
700 HOWARD AVE, EUGENE, OREGON 97404
HOWARD ELEMENTARY SCHOOL

SECTOR B FIRE ALARM PLAN - FIRST FLOOR

PROJECT #	1330
ISSUE DATE:	10/28/2014
DRAWN:	AMT
CHECKED:	SJT
REVISIONS	

E133

PRINTED ON: 10/23/2014 3:14:04 PM FROM FILE: C:\Revit Local Files\13-1532_HES MEP\4\13-1532_HES MEP14_stacy.hansen.rvt

© 2014 PIVOT ARCHITECTURE

GENERAL NOTES:

A. THE FIRE ALARM SYSTEM IS A CONTRACTOR DESIGN-BUILD SYSTEM. DEVICE LOCATIONS AND QUANTITIES SHOWN ARE PREFERRED; HOWEVER, ADDITIONAL DEVICES MAY BE REQUIRED TO COMPLY WITH CODE. CONTRACTOR SHALL PROVIDE ADDITIONAL FIRE ALARM DEVICES, ACCESSORIES AND ANY ADDITIONAL ITEMS REQUIRED FOR A COMPLETE AND OPERATIONAL CODE COMPLIANT SYSTEM. REFERENCE SPECIFICATION DIVISION 28 30 00 FOR ADDITIONAL INFORMATION.

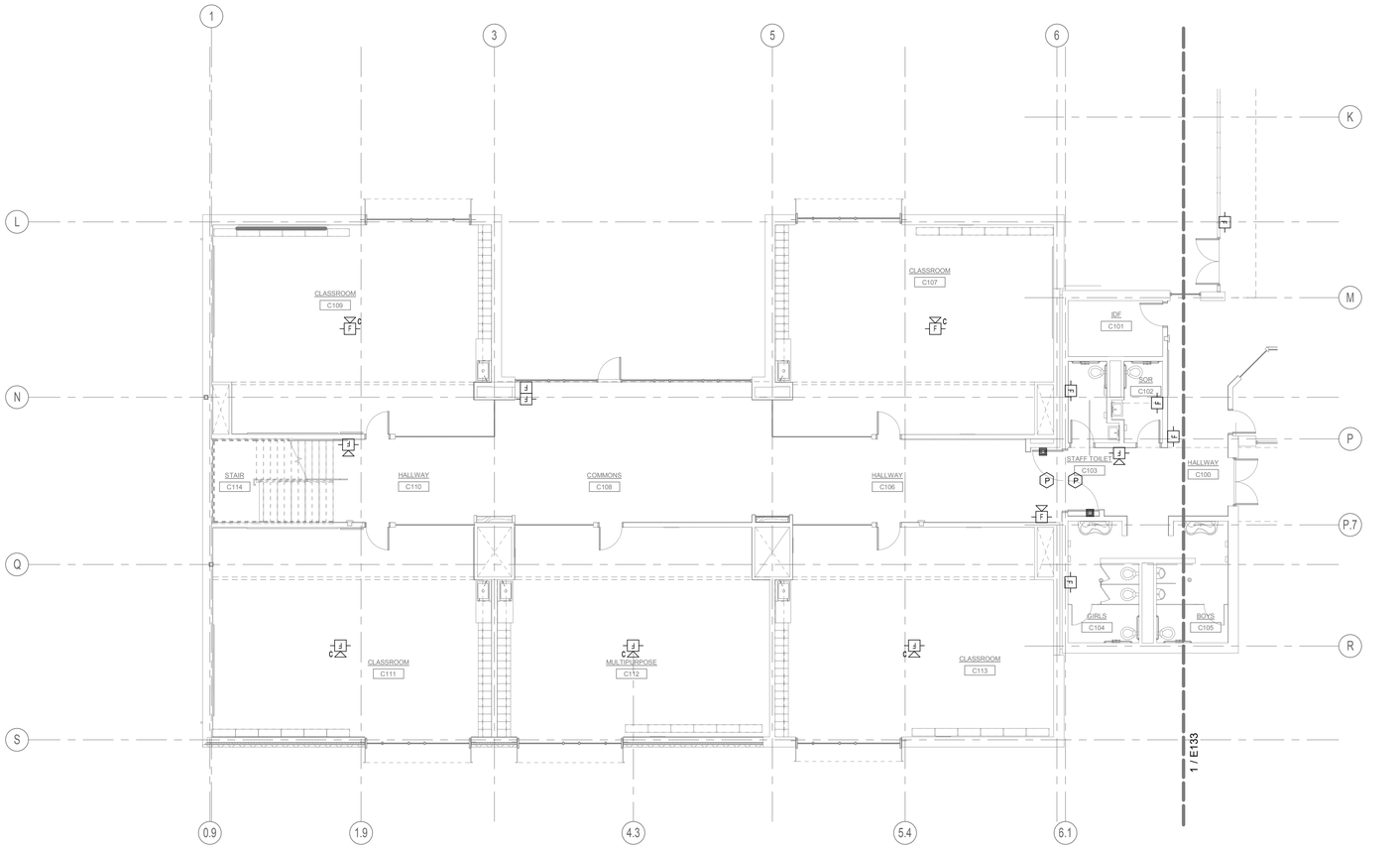

1 SECTOR C FIRE ALARM PLAN - FIRST FLOOR
1/8" = 1'-0"

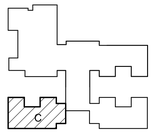

PIVOT ARCHITECTURE

REGISTERED PROFESSIONAL ENGINEER
STEPHEN J. TURNA
OREGON
JULY 16, 1985
EXPIRES: 6-30-16
10-23-14

PAE
Portland | San Francisco | Seattle
pae-engineers.com

HOWARD RECONCILED SET
EUGENE SCHOOL DISTRICT
700 HOWARD AVE, EUGENE, OREGON 97404
HOWARD ELEMENTARY SCHOOL

SECTOR C FIRE ALARM PLAN - FIRST FLOOR

PROJECT #:	1.135
ISSUE DATE:	10/28/2014
DRAWN:	AMT
CHECKED:	SJT

REVISIONS:

E135

PRINTED ON: 10/23/2014 3:14:07 PM FROM FILE: C:\Revit Local Files\13-1532_HES MEP14\13-1532_HES MEP14_stacy.hansen.rvt

© 2014 PIVOT ARCHITECTURE

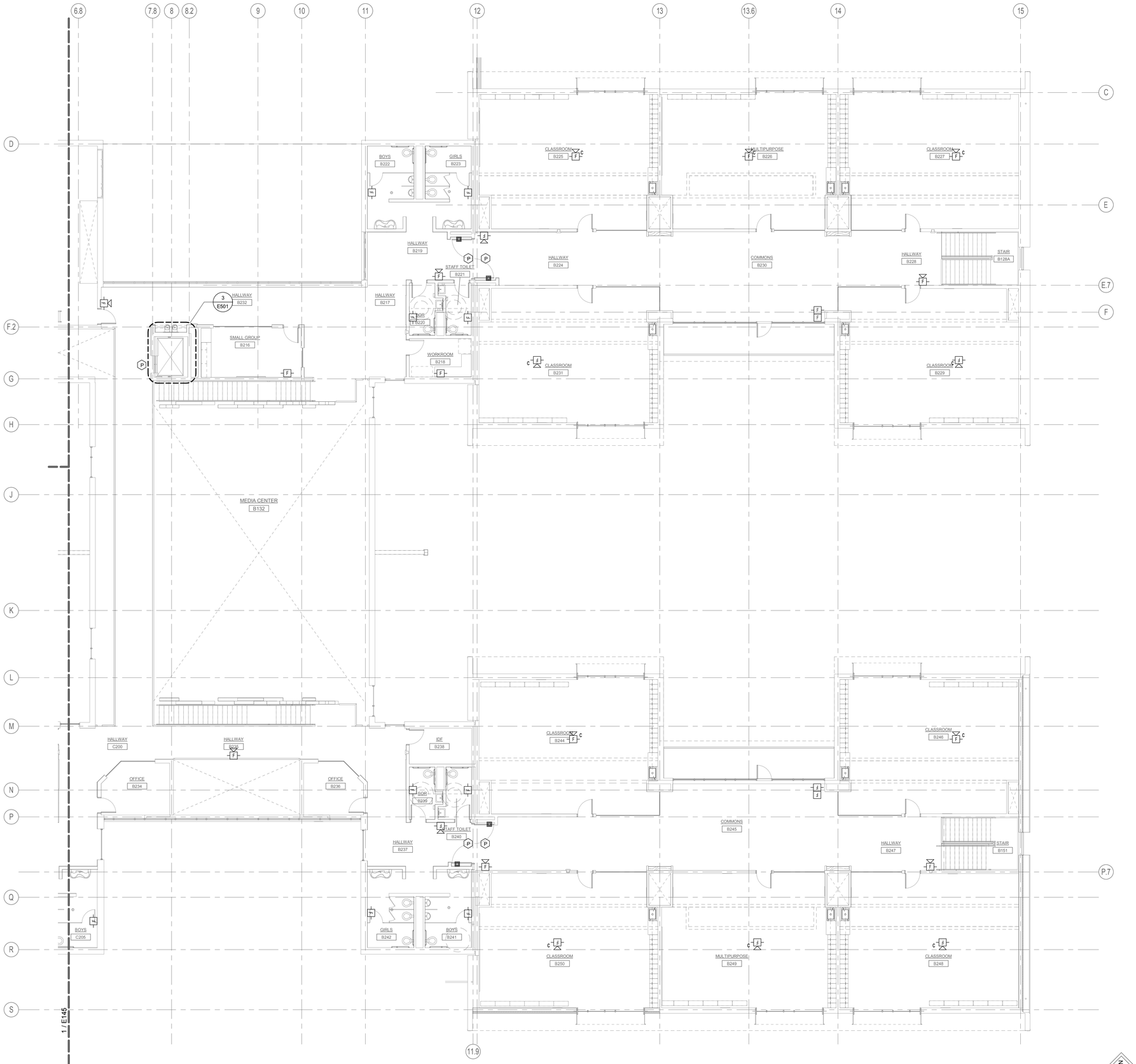

1 SECTOR B FIRE ALARM PLAN - SECOND FLOOR
1/8" = 1'-0"

GENERAL NOTES:

A. THE FIRE ALARM SYSTEM IS A CONTRACTOR DESIGN-BUILD SYSTEM. DEVICE LOCATIONS AND QUANTITIES SHOWN ARE PREFERRED; HOWEVER, ADDITIONAL DEVICES MAY BE REQUIRED TO COMPLY WITH CODE. CONTRACTOR SHALL PROVIDE ADDITIONAL FIRE ALARM DEVICES, ACCESSORIES AND ANY ADDITIONAL ITEMS REQUIRED FOR A COMPLETE AND OPERATIONAL CODE COMPLIANT SYSTEM. REFERENCE SPECIFICATION DIVISION 28 30 00 FOR ADDITIONAL INFORMATION.

PIVOT ARCHITECTURE

REGISTERED PROFESSIONAL ENGINEER
OREGON
JULY 16, 1982
STEPHEN J. TURNA
EXPIRES: 6-30-16
10-23-14

PAE
Portland | San Francisco | Seattle
pae-engineers.com

HOWARD RECONCILED SET
EUGENE SCHOOL DISTRICT 4J
700 HOWARD AVE, EUGENE, OREGON 97404
HOWARD ELEMENTARY SCHOOL

SECTOR B FIRE ALARM PLAN - SECOND FLOOR

PROJECT #	1336
ISSUE DATE:	10/28/2014
DRAWN:	AJRT
CHECKED:	SJT
REVISIONS:	

E143

PRINTED ON: 10/23/2014 3:14:12 PM FROM FILE: C:\Revit Local Files\13-1532_HES MEP14\13-1532_HES MEP14_sitsoy.hansen.rvt

© 2014 PIVOT ARCHITECTURE

GENERAL NOTES:

A. THE FIRE ALARM SYSTEM IS A CONTRACTOR DESIGN-BUILD SYSTEM. DEVICE LOCATIONS AND QUANTITIES SHOWN ARE PREFERRED; HOWEVER, ADDITIONAL DEVICES MAY BE REQUIRED TO COMPLY WITH CODE. CONTRACTOR SHALL PROVIDE ADDITIONAL FIRE ALARM DEVICES, ACCESSORIES AND ANY ADDITIONAL ITEMS REQUIRED FOR A COMPLETE AND OPERATIONAL CODE COMPLIANT SYSTEM. REFERENCE SPECIFICATION DIVISION 28 30 00 FOR ADDITIONAL INFORMATION.

NOTES:

1. DUCT SMOKE DETECTOR TO BE INSTALLED IN EXHAUST DUCT.

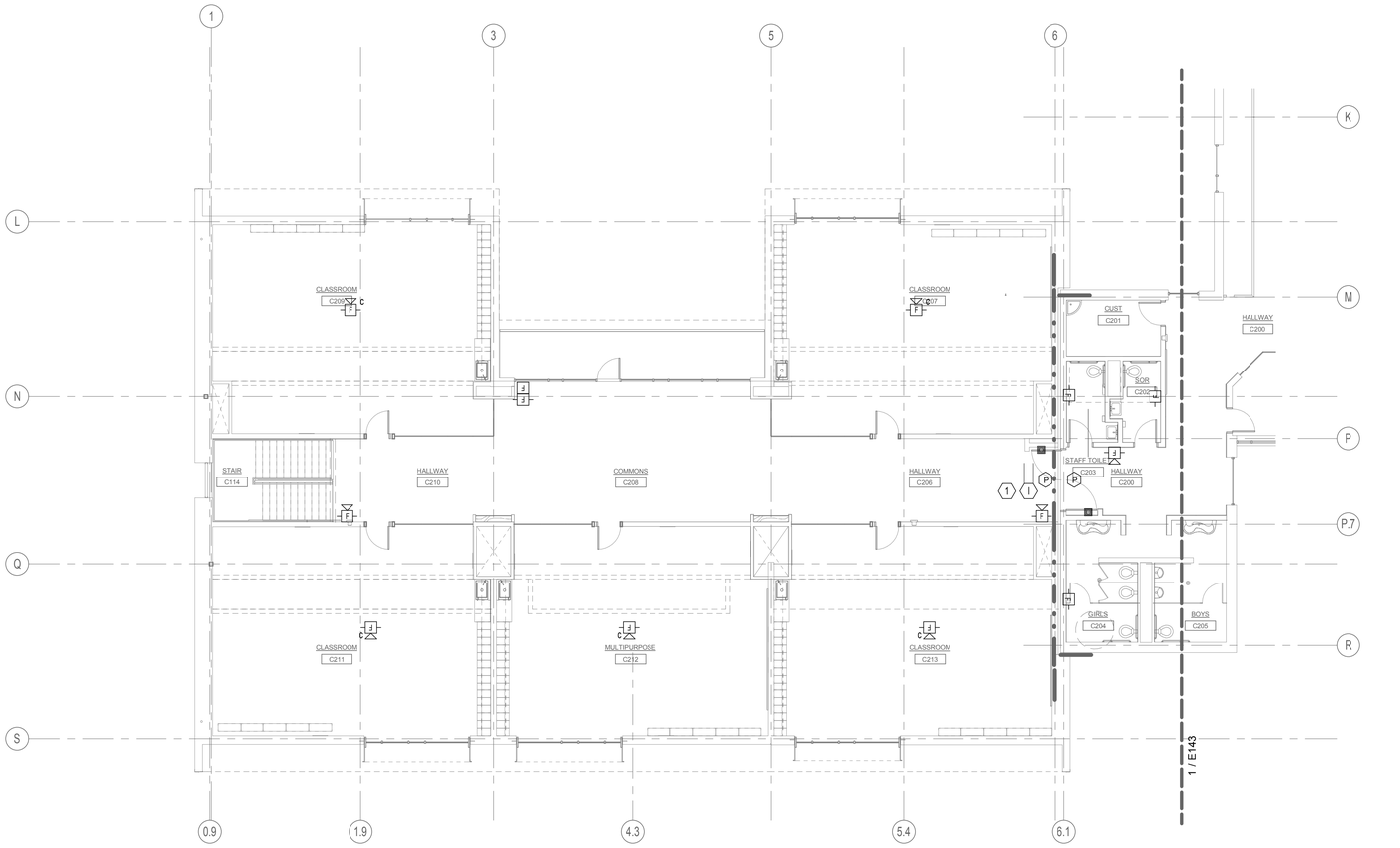

1 SECTOR C FIRE ALARM PLAN - SECOND FLOOR
1/8" = 1'-0"

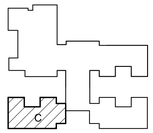

PIVOT ARCHITECTURE

REGISTERED PROFESSIONAL ENGINEER
STEPHEN J. TURNA
OREGON
JAN 16, 1987
EXPIRES: 6-30-16
10-23-14

PAE
Portland | San Francisco | Seattle
pae-engineers.com

HOWARD RECONCILED SET
EUGENE SCHOOL DISTRICT
700 HOWARD AVE, EUGENE, OREGON 97404
HOWARD ELEMENTARY SCHOOL

SECTOR C FIRE ALARM PLAN - SECOND FLOOR

PROJECT #:	1336
ISSUE DATE:	10/28/2014
DRAWN:	AMT
CHECKED:	SJT

REVISIONS:

E145

PRINTED ON: 10/23/2014 3:14:16 PM FROM FILE: C:\Revit Local Files\13-1532_HES MEP14\13-1532_HES MEP14_stacy.hansen.rvt

© 2014 PIVOT ARCHITECTURE

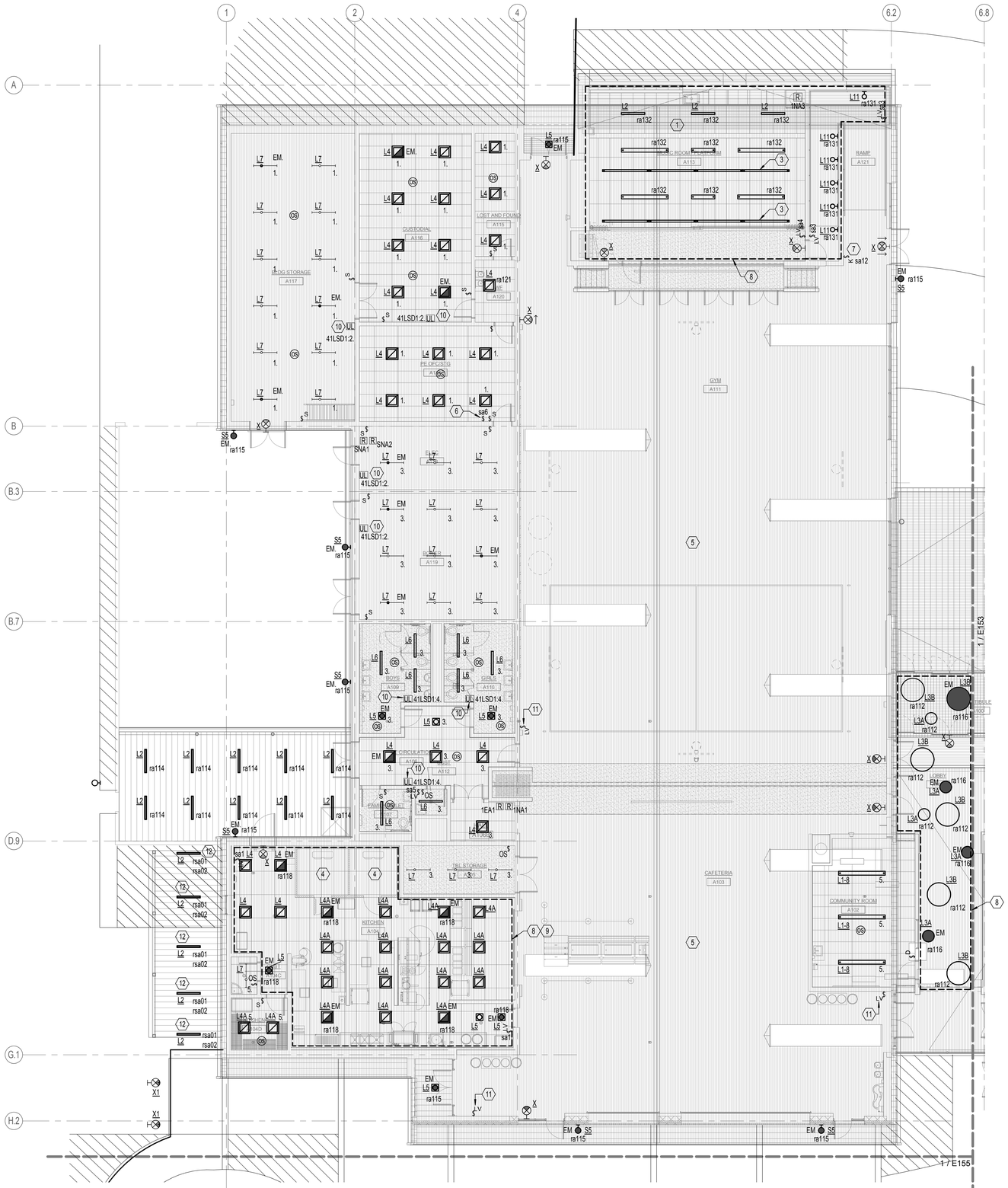

1 SECTOR A LIGHTING PLAN - FIRST FLOOR
1/8" = 1'-0"

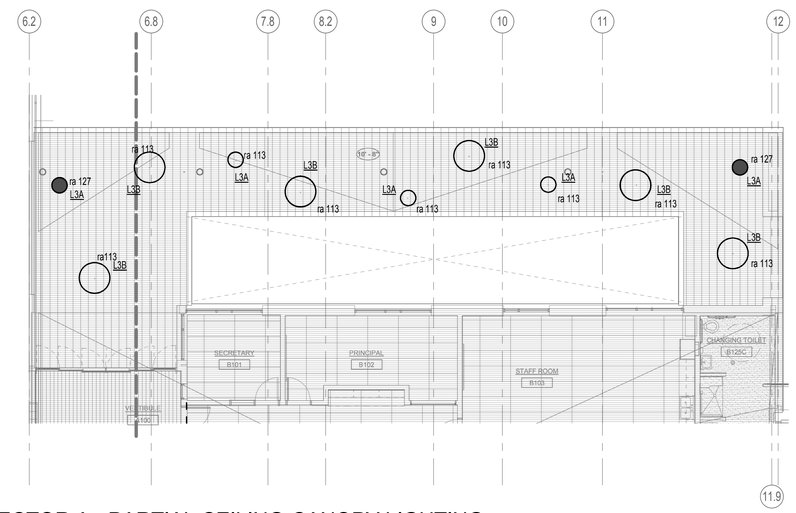

2 SECTOR A - PARTIAL CEILING-CANOPY LIGHTING
1/8" = 1'-0"

GENERAL NOTES:

A. ALL PENETRATION AND ROUTING PATHS OF EXPOSED CONDUIT SHALL BE COORDINATED AND REVIEWED BY ARCHITECT AND ENGINEER PRIOR TO INSTALLATION.

B. PROVIDE NO MORE THAT (6) CURRENT CARRYING CONDUCTORS PER HOMERUN.

C. CIRCUIT NUMBER SHOWN NEXT TO NORMAL LUMINAIRES SHALL BE CIRCUITED TO PANEL '41D1', UNLESS OTHERWISE NOTED.

D. PROVIDE CONNECTIONS TO EXIT SIGNS FROM THE NEAREST EMERGENCY CIRCUIT WITH AN UNSWITCHED LEG.

E. CONCEAL CONDUIT AND RECESS DEVICES IN CMU WALLS IN GYM, CAFETERIA, RAMP, MUSIC, KITCHEN, RESTROOMS AND PUBLIC SPACES. CONDUIT AND DEVICES MAY BE SURFACE MOUNTED ON CMU WALLS IN OTHER SPACES.

NOTES:

1. INSTALL L1-4, L1-8 AT +15' AFF IN THIS AREA.
2. DUAL-TECH OCCUPANCY SENSOR WITH AUX CONTACT FOR USE WITH HVAC.
3. THEATRICAL PIPE RACK. SEE POWER PLAN FOR RECEPTACLE REQUIREMENTS.
4. LIGHT INTEGRAL TO COOLER/FREEZER.
5. REFER TO E162 FOR LIGHTING/CONTROL FOR THE GYM AND CAFETERIA.
6. OVERRIDE SWITCH FOR PLAY AREA.
7. KEYED SWITCH FOR P/E CELL OVERRIDE(ENABLE FULL OUTPUT OF LIGHTS IN GYM). REFER TO LIGHTING RELAY SCHEDULE ON SHEET E703 FOR ADDITIONAL INFORMATION AND REQUIREMENTS.
8. LOW VOLTAGE LIGHTING CONTROL ZONE. REFER TO LIGHTING RELAY SCHEDULE ON SHEET E703 FOR ADDITIONAL INFORMATION AND REQUIREMENTS.
9. KITCHEN LUMINAIRE SHALL BE ON RELAY 'ra111' UNLESS OTHERWISE NOTED.
10. PROVIDE UL924 DEVICE FOR EMERGENCY LUMINAIRE IN THIS AREA. EMERGENCY CIRCUIT SHOWN ON PLAN.
11. REFER TO E162 FOR SWITCH CIRCUITING AND ADDITIONAL INFORMATION.
12. PROVIDE (2) RELAYS FOR LIGHT REDUCTION BASED ON TIME CLOCK INPUT.

NORTH

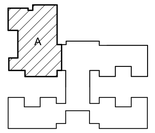

PIVOT ARCHITECTURE

REGISTERED PROFESSIONAL ENGINEER
STEPHEN J. TURNA
OREGON
JAN 16, 1987
10-23-14
EXPIRES: 6-30-16

PAE
Portland | San Francisco | Seattle
pae-engineers.com

HOWARD RECONCILED SET
EUGENE SCHOOL DISTRICT
700 HOWARD AVE, EUGENE, OREGON 97404
HOWARD ELEMENTARY SCHOOL

SECTOR A LIGHTING PLAN - FIRST FLOOR

PROJECT #	1330
ISSUE DATE:	10/28/2014
DRAWN:	AMT
CHECKED:	SJT

REVISIONS

E151

PRINTED ON: 10/23/2014 3:14:24 PM FROM FILE: C:\Revit Local Files\13-1532_HES MEP\4113-1532_HES MEP14_stacy.hansen.rvt

© 2014 PIVOT ARCHITECTURE

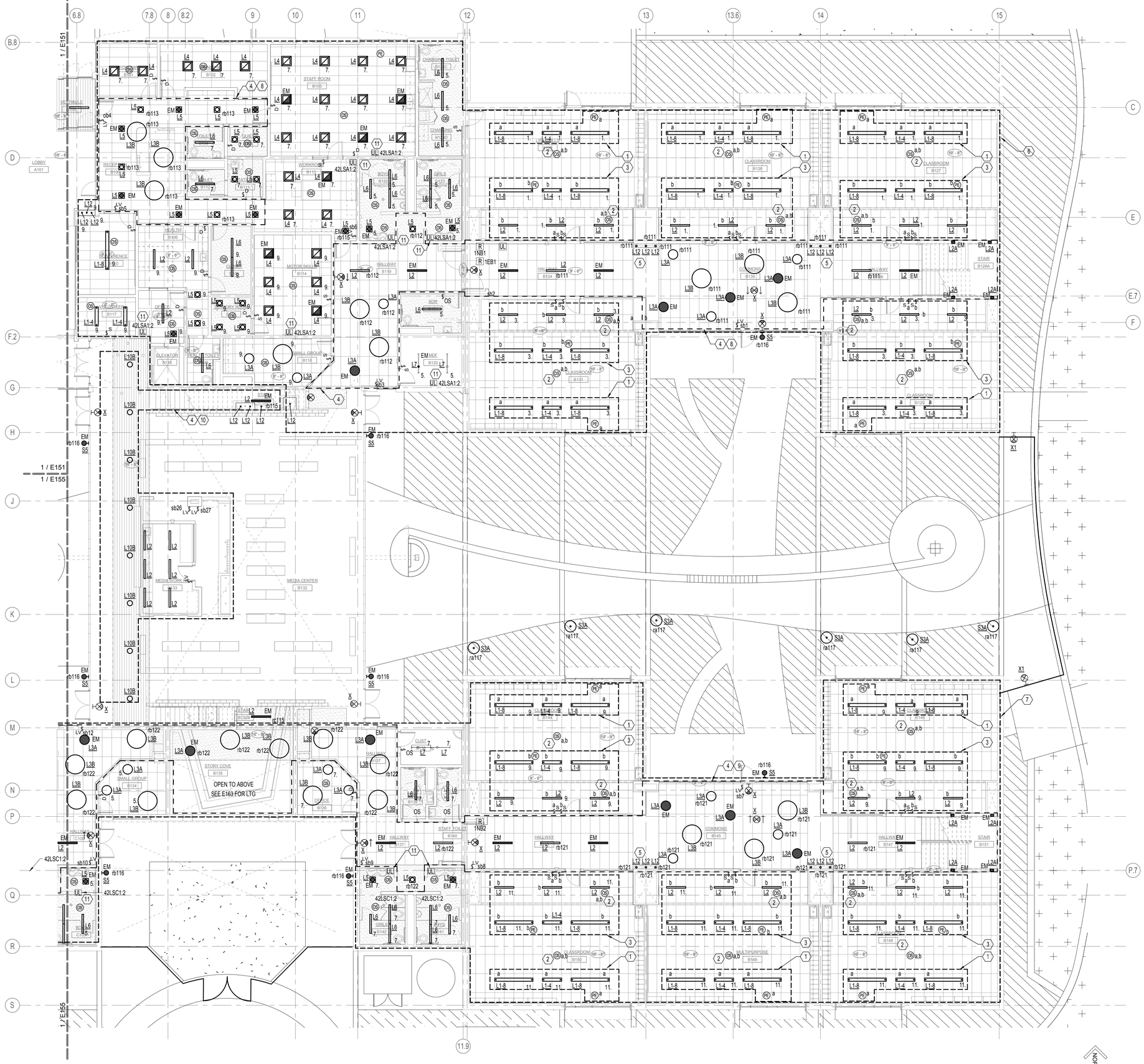

1 SECTOR B LIGHTING PLAN - FIRST FLOOR
1/8" = 1'-0"

GENERAL NOTES:

A. ALL PENETRATION AND ROUTING PATHS OF EXPOSED CONDUIT SHALL BE COORDINATED AND REVIEWED BY ARCHITECT AND ENGINEER PRIOR TO INSTALLATION.

B. PROVIDE NO MORE THAT (6) CURRENT CARRYING CONDUCTORS PER HOMERUN.

C. PROVIDE CONNECTION TO EXIT SIGNS FROM TE NEAREST EMERGENCY CIRCUIT WITH AN UNSWITCHED LEG.

D. REFER TO DETAIL 4/E501 FOR TYPICAL CLASSROOM LIGHTING CONTROL DIAGRAM.

E. REFER TO 'TYPICAL CLASSROOM LIGHTING CONTROL DIAGRAM' DETAIL ON SHEET E502 FOR CLASSROOM LIGHTING CONTROL INFORMATION.

NOTES:

1. DAYLIGHT HARVEST ZONE (PRIMARY).

2. DUAL-TECH OCCUPANCY SENSOR WITH AUX CONTACT FOR USE WITH HVAC.

3. DAYLIGHT HARVEST ZONE (SECONDARY).

4. LOW VOLTAGE LIGHTING CONTROL ZONE. REFER TO LIGHTING RELAY SCHEDULE ON SHEET E703 FOR ADDITIONAL INFORMATION AND REQUIREMENTS.

5. RECESSED LED ACCENT LIGHT IN DISPLAY CASE.

6. CIRCUIT NUMBER SHOWM NEXT TO THE NORMAL LUMINAIRES IN THIS AREA SHALL BE CIRCUITED TO PANEL '41A1', UNLESSOTHERWISE NOTED.

7. CIRCUIT NUMBER SHOWN NEXT TO THE NORMAL LUMINAIRES IN THIS AREA SHALL BE CIRCUITED TO PANEL '41C1', UNLESS OTHERWISE NOTED.

8. EMERGENCY LUMINAIRES IN THIS LOW VOLTAGE AREA SHALL BE ON RELAY 'rb115', UNLESS OTHERWISE NOTED.

9. EMERGENCY LUMINAIRES IN THIS LOW VOLTAGE AREA SHALL BE ON RELAY 'rc115', UNLESS OTHERWISE NOTED.

10. NORMAL LUMINAIRES IN THIS LOW VOLTAGE ARES SHALL BE ON RELAY 'rb213' , UNLESS OTHERWISE NOTED.

11. PROVIDE UL924 DEVICE FOR EMERGENCY LUMINAIRES IN THIS AREA. EMERGENCY CIRCUIT SHOWN ON PLAN.

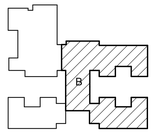

PIVOT ARCHITECTURE

REGISTERED PROFESSIONAL ENGINEER
11612
OREGON
JAN 16, 1987
STEPHEN J. TURNA
10-23-14
EXPIRES: 6-30-16

PAE
Portland | San Francisco | Seattle
pae-engineers.com

HOWARD RECONCILED SET
EUGENE SCHOOL DISTRICT
700 HOWARD AVE, EUGENE, OREGON 97404
HOWARD ELEMENTARY SCHOOL

SECTOR B LIGHTING PLAN - FIRST FLOOR

PROJECT #:	1306	REVISIONS
ISSUE DATE:	10/28/2014	
DRAWN:	AMT	
CHECKED:	SJT	

E153

PRINTED ON: 10/23/2014 3:14:36 PM FROM FILE: C:\Revit Local Files\13-1532_HES MEP\14-13-1532_HES MEP14_stacy.hansen.rvt

© 2014 PIVOT ARCHITECTURE

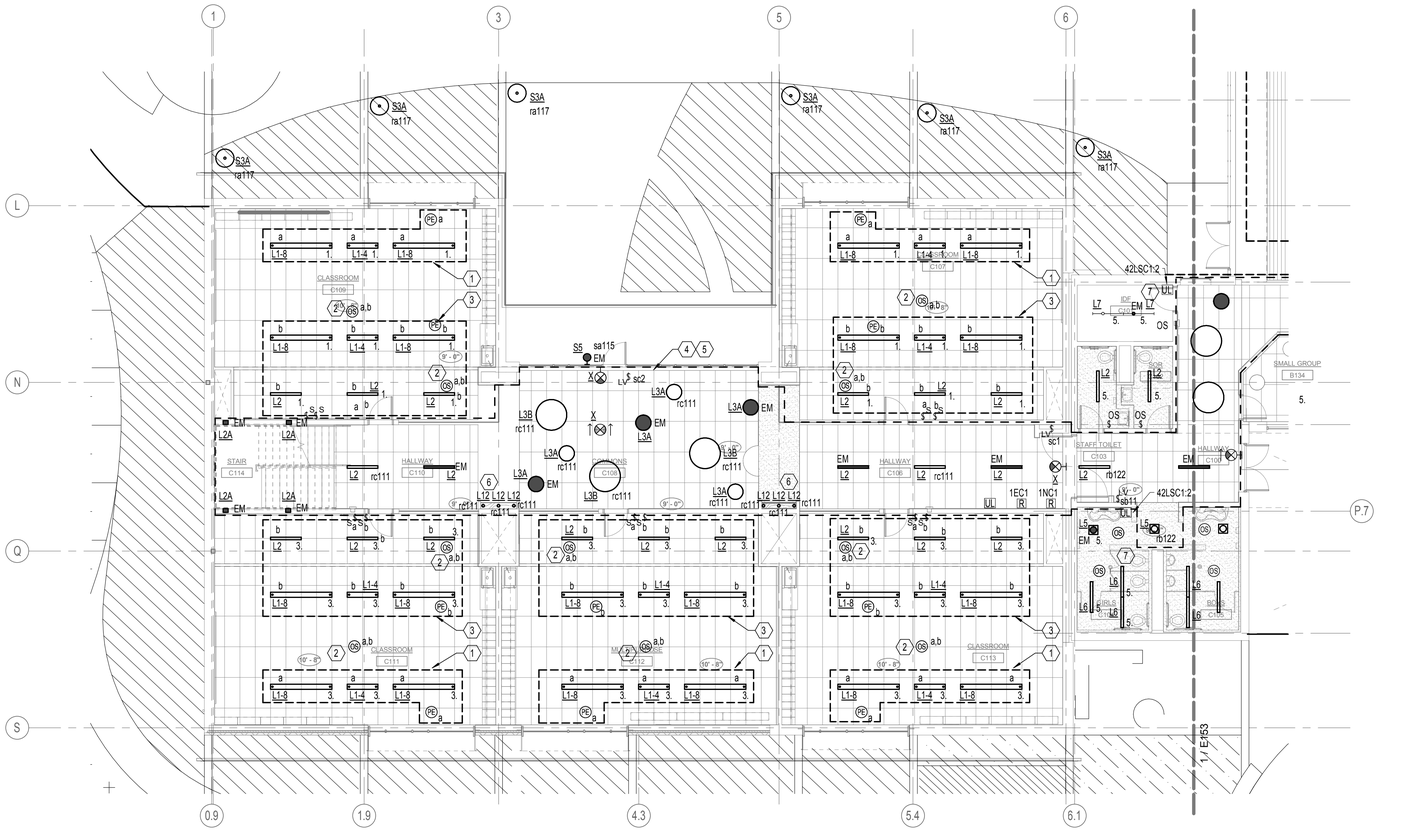

1 SECTOR C LIGHTING PLAN - FIRST FLOOR
1/8" = 1'-0"

GENERAL NOTES:

A. ALL PENETRATION AND ROUTING PATHS OF EXPOSED CONDUIT SHALL BE COORDINATED AND REVIEWED BY ARCHITECT AND ENGINEER PRIOR TO INSTALLATION.

B. PROVIDE NO MORE THAT (6) CURRENT CARRYING CONDUCTORS PER HOMERUN.

C. CIRCUIT NUMBER SHOWN NEXT TO NORMAL LININAIRES SHALL BE CIRCUITED TO PANEL '41C1', UNLESS OTHERWISE NOTED.

D. PROVIDE CONNECTION TO EXIT SIGN FROM NEAREST EMERGENCY CIRCUIT WITH AN UNSWITCHED LEG.

E. REFER TO DETAIL 4/E501 FOR TYPICAL LIGHTING CONTROL DIAGRAM.

F. REFER TP 'TYPICAL CLASSROOM LIGHTING CONTROL DIAGRAM' DETAIL ON SHEET E502 FOR CLASSROOM LIGHTING CONTROL INFORMATION.

NOTES:

1. DAYLIGHT HARVEST ZONE (PRIMARY).

2. DUAL-TECH OCCUPANCY SENSOR WITH AUX CONTACT FOR USE WITH HVAC.

3. DAYLIGHT HARVEST ZONE (SECONDARY).

4. LOW VOLTAGE LIGHTING CONTROL ZONE. REFER TO LIGHTING RELAY SCHEDULE ON SHEET E703 FOR ADDITIONAL INFORMATION AND REQUIREMENTS.

5. EMERGENCY LLUMINAIRES IN THIS LOW VOLTAGE AREA SHALL BE ON RELAY 'rc115', UNLESS OTHERWISE NOTED.

6. RECESSED LED LIGHTING IN DISPLAY CASE.

7. PROVIDE UL924 DEVICE FRO EMERGENCY LUMINAIRES IN THIS AREA. EMERGENCY CIRCUIT SHOWN ON PLAN.

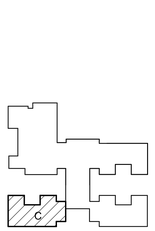

PIVOT ARCHITECTURE

REGISTERED PROFESSIONAL ENGINEER
OREGON
JAN 16, 1987
STEPHEN J. TURNIA
EXPIRES: 6-30-16
10-23-14

PAE
Portland | San Francisco | Seattle
pae-engineers.com

HOWARD RECONCILED SET
4J
EUGENE SCHOOL DISTRICT
700 HOWARD AVE, EUGENE, OREGON 97404
HOWARD ELEMENTARY SCHOOL

SECTOR C LIGHTING PLAN - FIRST FLOOR

PROJECT #	1330
ISSUE DATE:	10/28/2014
DRAWN:	AMT
CHECKED:	SJT

REVISIONS

E155

PRINTED ON: 10/23/2014 3:14:45 PM FROM FILE: C:\Revit Local Files\13-1532_HES MEP14\13-1532_HES MEP14_atacy.hansen.rvt

© 2014 PIVOT ARCHITECTURE

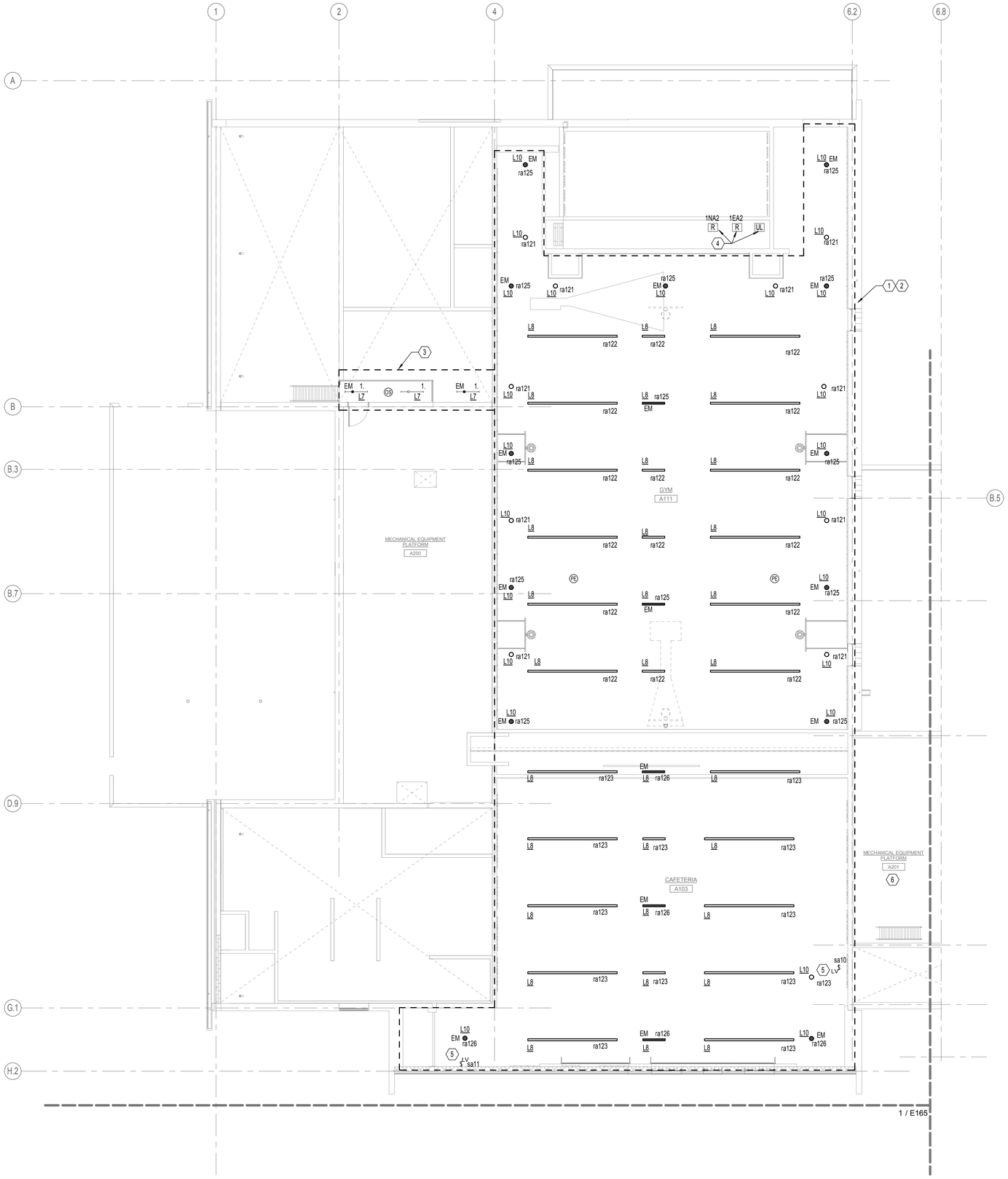

GENERAL NOTES:

A. ALL PENEATRATIONS AND ROUTING PATHS OF EXPOSED CONDUIT SHALL BE COORDINATED AND REVIEWED BY ARCHITECT AND ENGINEER PRIOR TO INSTALLATION.

B. PROVIDE NO MORE THAN (6) CURRENT CARRYING CONDUCTORS PER HOMERUN.

NOTES:

1. DAYLIGHT HARVEST ZONE. SEE CONTROLS E162 FOR PE OVERRIDE SWITCH INFO.

2. LOW VOLTAGE LIGHTING CONTROL ZONE. REFER TO LIGHTING RELAY SCHEDULE ON SHEET E703 FOR ADDITIONAIL INFORMATION AND REQUIREMENTS.

3. LUMINAIRES IN THIS AREA SHALL BE CONTROL VIA LOCAL OCCUPANCY SENSOR AND LOCAL SWITCHES IN BLDG STORAGE RM A117. EMERGENCY LUMINAIRE SHALL BE CIRCUITED VIA EMERGENCY CIRCUIT SHOWN IN BLDG STORAGE RM A117.

4. LIGHTING RELAYS AND UL924 DEVICE SHALL BE LOCATED IN THE MUSIC/ STAGE ROOM A113 CEILING.

5. LOW VOLTGAGE SWITCH FOR GYM/ CAFETERIA LIGHTING SHALL BE MOUNTED AT GROUND LEVEL, SAME HEIGHT AS OTHER SWITCHES.

6. REFER TO ENLARGED PLAN ON E414 FOR ADDITIONAL INFORMATION.

1 SECTOR A LIGHTING PLAN - SECOND FLOOR
1/8" = 1'-0"

NORTH

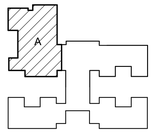

PIVOT ARCHITECTURE

REGISTERED PROFESSIONAL ENGINEER
STEPHEN J. TURNA
OREGON
JULY 16, 1985
EXPIRES: 6-30-16
10-23-14

PAE
Portland | San Francisco | Seattle
pae-engineers.com

HOWARD RECONCILED SET
EUGENE SCHOOL DISTRICT
700 HOWARD AVE, EUGENE, OREGON 97404
HOWARD ELEMENTARY SCHOOL

SECTOR A LIGHTING PLAN - SECOND FLOOR

PROJECT #	1538
ISSUE DATE:	10/28/2014
DRAWN:	AMT
CHECKED:	SJT
REVISIONS:	

E162

PRINTED ON: 10/23/2014 3:14:50 PM FROM FILE: C:\Revit Local Files\13-1532_HES MEP14\13-1532_HES MEP14_stacy.hansen.rvt

© 2014 PIVOT ARCHITECTURE

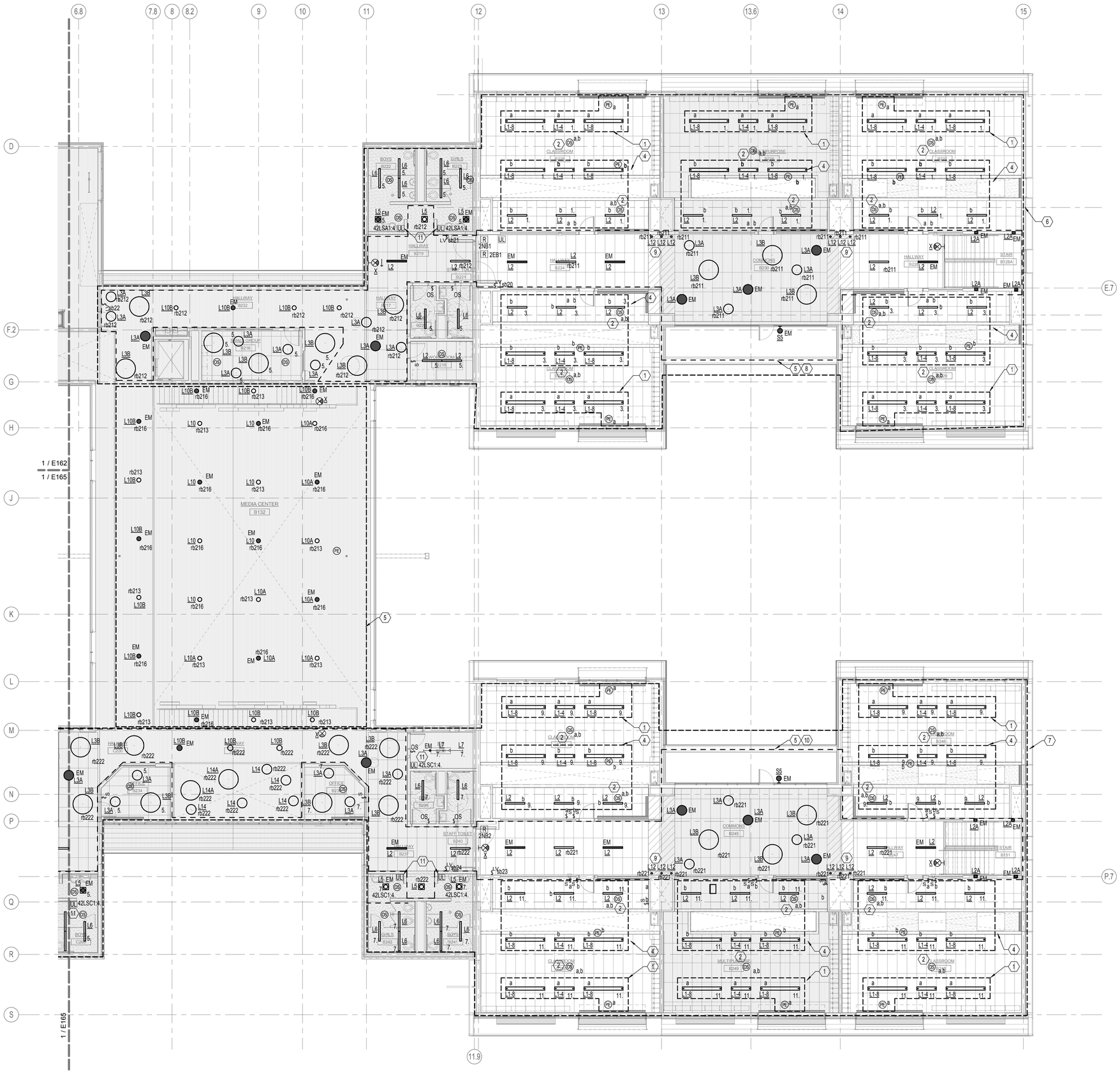

1 SECTOR B LIGHTING PLAN - SECOND FLOOR
1/8" = 1'-0"

GENERAL NOTES:

A. ALL PENETRATION AND ROUTING PATHS OF EXPOSED CONDUIT SHALL BE COORDINATED AND REVIEWED BY ARCHITECT AND ENGINEER PRIOR TO INSTALLATION.

B. PROVIDE NO MORE THAT (6) CURRENT CARRYING CONDUCTORS PER HOMERUN.

C. PROVIDE CONNECTION TO EXIT SIGN FROM NEAREST EMERGENCY CIRCUIT WITH UNSWITCHED LEG.

D. REFER TO DETAIL 4/E501 FOR TYPICAL LIGHTING CONTROL DIAGRAM.

E. REFER TO 'TYPICAL CLASSROOM LIGHTING CONTROL DIAGRAM' DETAIL ON SHEET E502 FOR CLASSROOM LIGHTING CONTROL INFORMATION.

NOTES:

1. DAYLIGHT HARVEST ZONE (PRIMARY).

2. DUAL-TECH OCCUPANCY SENSOR WITH AUX CONTACT FOR USE WITH HVAC.

3. NOT USED.

4. DAYLIGHT HARVEST ZONE (SECONDARY).

5. LOW VOLTAGE LIGHTING CONTROL ZONE. REFER TO LIGHTING RELAY SCHEDULE ON SHEET E703 FOR ADDITIONAL INFORMATION AND REQUIREMENTS.

6. CIRCUIT NUMBER NEXT TO NORMAL LUMINAIRES IN THIS AREA SHALL BE CIRUITED TO PANEL '42A1', UNLESS OTHERWIASE NOTED.

7. CIRCUIT NUMBER NEXT TO NORMAL LUMINAIRES IN THIS AREA SHALL BE CIRCUITED TO PANEL '42C1', UNLESS OTHERWISE NOTED.

8. EMERGENCY LUMINAIRE IN THIS LOW VOLTAGE AREA SHALL BE ON RELAY 'rb215', UNLESS OTHERWISE NOTED.

9. RECESSED LED ACCENT LIGHT IN DISPLAY CASE.

10. EMERGENCY LUMINAIRE IN THIS LOW VOLTAGE AREA SHALL BE ON RELAY 'rc215', UNLESS OTHERWISE NOTED.

11. PROVIDE UL924 DEVICE FOR EMEGENCY LUMINARIES IN THIS AREA. EMERGENCY CURCUIT SHOWN ON PLAN.

PIVOT ARCHITECTURE

REGISTERED PROFESSIONAL ENGINEER
OREGON
JUL 16, 1987
STEPHEN J. TURNA
10-23-14
EXPIRES: 6-30-16

PAE
Portland | San Francisco | Seattle
pae-engineers.com

HOWARD RECONCILED SET
EUGENE SCHOOL DISTRICT
700 HOWARD AVE, EUGENE, OREGON 97404
HOWARD ELEMENTARY SCHOOL

SECTOR B LIGHTING PLAN - SECOND FLOOR

PROJECT #	1130
ISSUE DATE:	10/28/2014
DRAWN:	AMT
CHECKED:	SJT

REVISIONS

E163

PRINTED ON: 10/23/2014 3:15:00 PM FROM FILE: C:\Revit Local Files\13-1532_HES MEP14\13-1532_HES MEP14_stacy.hansen.rvt

© 2014 PIVOT ARCHITECTURE

GENERAL NOTES:

A. ALL PENETRATION AND ROUTING PATHS OF EXPOSED CONDUIT SHALL BE COORDINATED AND REVIEWED BY ARCHITECT AND ENGINEER PRIOR TO INSTALLATION.

B. PROVIDE NO MORE THAT (6) CURRENT CARRYING CONDUCTORS PER HOMERUN.

C. CIRCUIT NUMBER SHOWN NEXT TO NORMAL LININAIRES SHALL BE CIRCUITED TO PANEL '42C1', UNLESS OTHERWISE NOTED.

D. PROVIDE CONNECTION TO EXIT SIGN FROM NEAREST EMERGENCY CIRCUIT WITH AN UNSWITCHED LEG.

E. REFER TO DETAIL 4/E501 FOR TYPICAL LIGHTING CONTROL DIAGRAM.

F. REFER TO 'TYPICAL CLASSROOM LIGHTING CONTROL DIAGRAM' DETAIL ON SHEET E502 FOR CLASSROOM LIGHTING CONTROL INFORMATION.

NOTES:

1. DAYLIGHT HARVEST ZONE (PRIMARY).

2. DUAL-TECH OCCUPANCY SENSOR WITH AUX CONTACT FOR USE WITH HVAC.

3. DAYLIGHT HARVEST ZONE (SECONDARY).

4. LOW VOLTAGE LIGHTING CONTROL ZONE. REFER TO LIGHTING RELAY SCHEDULE ON SHEET E703 FOR ADDITIONAL INFORNATION AND REQUIREMENTS.

5. RECESSED LED LIGHTING IN DISPLAY CASE.

6. EMERGENCY LUMINAIRE IN THIS LOW VOLTAGE AREA SHALL BE ON RELAY 'rc 215', UNLESS OTHERWISE NOTED.

7. PROVIDE UL924 DEVICE FOR EMERGENCY LUMINAIRES IN THIS AREA. EMERGENCY CIRCUIT SHOWN ON PLAN.

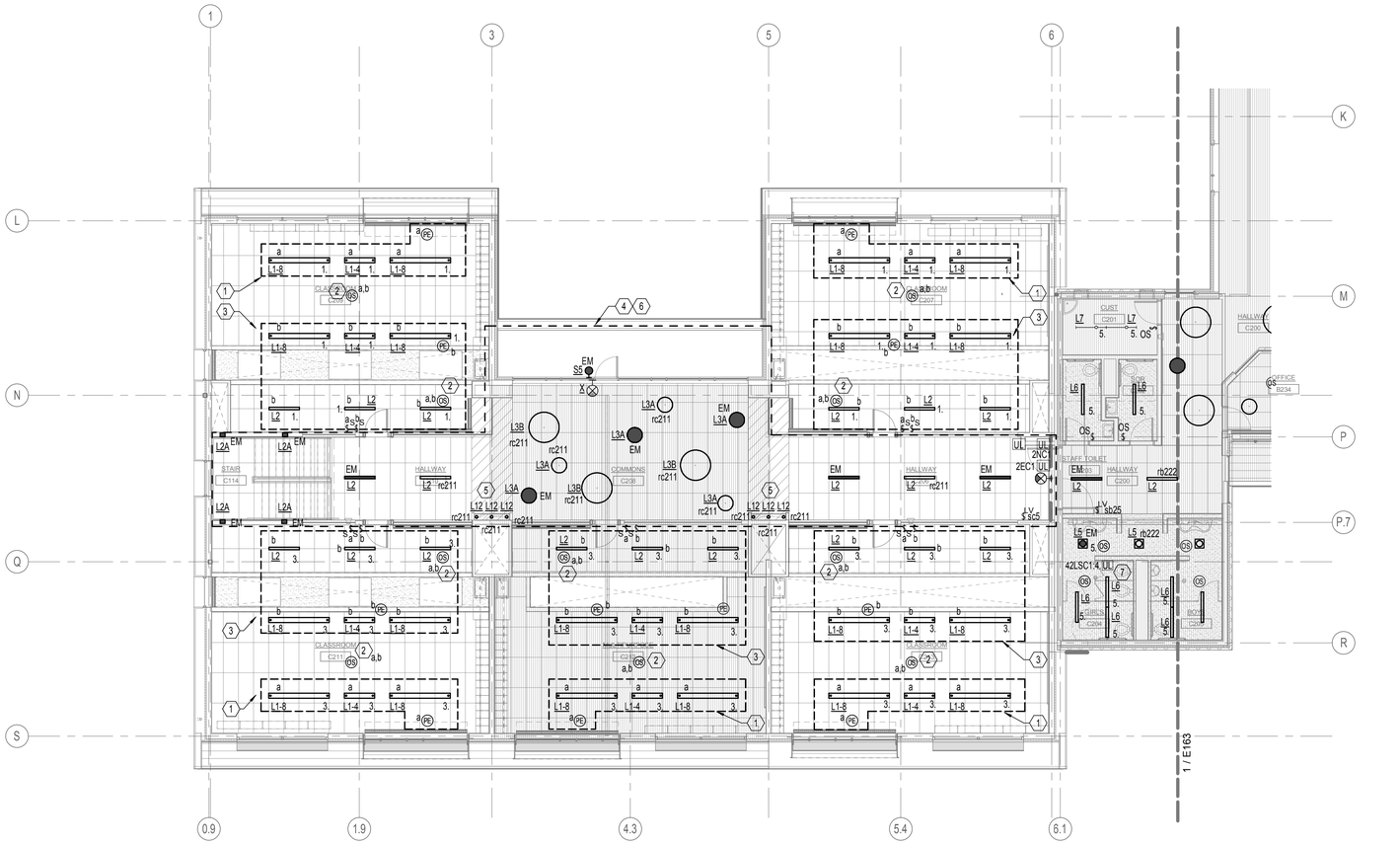

1 SECTOR C LIGHTING PLAN - SECOND FLOOR
1/8" = 1'-0"

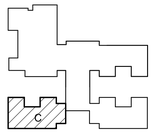

PIVOT ARCHITECTURE

REGISTERED PROFESSIONAL ENGINEER
STEPHEN J. TURNIA
OREGON
JUL 16, 1982
EXPIRES: 6-30-16
10-23-14

PAE
Portland | San Francisco | Seattle
pae-engineers.com

HOWARD RECONCILED SET
EUGENE SCHOOL DISTRICT
700 HOWARD AVE, EUGENE, OREGON 97404
HOWARD ELEMENTARY SCHOOL

SECTOR C LIGHTING PLAN - SECOND FLOOR

PROJECT #:	1336
ISSUE DATE:	10/28/2014
DRAWN:	AMT
CHECKED:	SJT
REVISIONS:	

E165

PRINTED ON: 10/23/2014 3:15:09 PM FROM FILE: C:\Revit Local Files\13-1532_HES MEP14\13-1532_HES MEP14_stacy.hansen.rvt

© 2014 PIVOT ARCHITECTURE

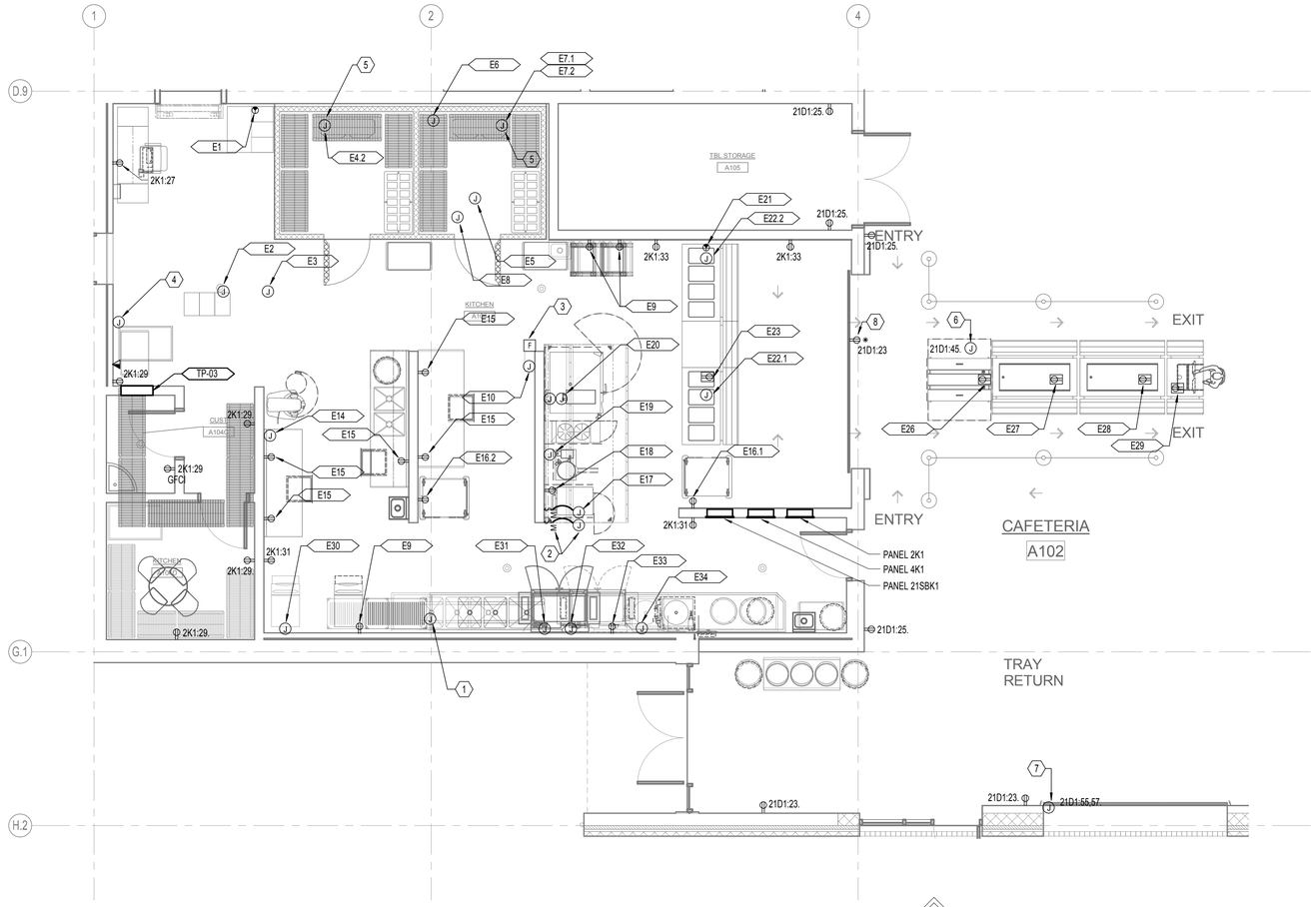

1 ENLARGED PLAN - KITCHEN - POWER

1/4" = 1'-0"

KITCHEN EQUIPMENT CONNECTION SCHEDULE													
EQUIPMENT DESCRIPTIONS			ELECTRICAL CHARACTERISTICS				FEEDER CHARACTERISTICS				PANEL INFORMATION		NOTES
TAG	DESCRIPTION	LOCATION	LOAD (KW)	LOAD (AMPS)	VOLTS	PHASE	CONDUIT	PHASE CONDUCTORS	GROUND CONDUCTORS	OCP	PANEL	CIRCUIT	
E1	AIR CURTAIN	WALL	0.35	1.7	208	1	3/4"	2#12	1#12	20/2	2K1	1,3	
E2	W.I. COOLER CONDENSING UNIT	ROOF	3.12	15.0	208	1	1"	2#10	1#10	20/2	21SBK1	1,3	
E3	W.I. FREEZER CONDENSING UNIT	ROOF	5.40	15.0	208	3	1"	4#10	1#10	20/3	21SBK1	5,7,9	
E4.1	WALK-IN COOLER CONDENSING UNIT	CEILING	3.12	15.0	208	1	1"	2#10	1#10	20/2	21SBK1	11,13	
E4.2	WALK-IN COOLER EVAPORATOR	CEILING	0.24	2.0	120	1	3/4"	2#12	1#12	20/1	21SBK1	15	
E5	WALK-IN LIGHTS	CEILING	0.16	1.3	120	1	3/4"	2#12	1#12	20/1	21SBK1	15	
E6	WALK-IN DRAIN LINE HEATER	CEILING	0.50	4.2	120	1	3/4"	2#12	1#12	20/1	21SBK1	15	
E7.1	WALK-IN FREEZER CONDENSING UNIT	CEILING	5.40	15.0	208	3	1"	4#10	1#10	20/3	21SBK1	2,4,6	
E7.2	WALK-IN FREEZER EVAPORATOR	CEILING	1.62	7.8	208	1	1"	2#10	1#10	20/2	21SBK1	8,10	
E8	WALK-IN DOOR HEATER	CEILING	0.50	4.2	120	1	3/4"	2#12	1#12	20/1	21SBK1	12	
E9	CONVENIENCE	WALL	1.44	12.0	120	1	3/4"	2#12	1#12	20/1	2K1	5	
E10	FIRE-PROTECTION SYSTEM	WALL	1.00	8.3	120	1	3/4"	2#12	1#12	20/1	2K1	7	
E11	---	---	---	---	---	---	---	---	---	---	---	---	
E12	---	---	---	---	---	---	---	---	---	---	---	---	
E13	---	---	---	---	---	---	---	---	---	---	---	---	
E14	30-QUART MIXER	WALL	1.01	2.8	208	3	3/4"	4#12	1#12	20/3	2K1	2,4,6	
E15	CONVENIENCE	WALL	1.44	12.0	120	1	3/4"	2#12	1#12	20/1	2K1	9	
E16.1	MOBILE HEATED/PROOFING CABINET	WALL	1.44	12.0	120	1	3/4"	2#12	1#12	20/1	2K1	11	
E16.2	MOBILE HEATED/PROOFING CABINET	WALL	1.44	12.0	120	1	3/4"	2#12	1#12	20/1	2K1	8	
E17	CANOPY HOOD LIGHTS	CEILING	0.16	1.3	120	1	3/4"	2#12	1#12	20/1	2K1	10	
E18	CONVECTION STEAMER	WALL	1.80	15.0	120	1	3/4"	2#12	1#12	20/1	2K1	39	
E19	20-GALLON TILTING KETTLE	WALL	6.48	18.0	208	3	1"	4#10	1#10	25/3	2K1	12,14,16	
E20	DBL. STACK COMBI-OVEN STEAMERS	WALL	2.59	7.2	208	3	1"	(2) 4#12	1#12	(2) 20/3	2K1	20-24, 36-40	
E21	HOT FOOD SERVING STATION	WALL	1.15	9.6	120	1	3/4"	2#12	1#12	20/1	2K1	10	
E22.1	FOOD GUARD DISPLAY LIGHTS	WALL	1.28	10.7	120	1	3/4"	2#12	1#12	20/1	2K1	15	
E22.2	FOOD GUARD DISPLAY LIGHTS	WALL	1.28	10.7	120	1	3/4"	2#12	1#12	20/1	2K1	17	
E23	HOT FOOD SERVING STATION	FLOOR	1.15	9.6	120	1	3/4"	2#12	1#12	20/1	2K1	19	
E24	---	---	---	---	---	---	---	---	---	---	---	---	
E25	---	---	---	---	---	---	---	---	---	---	---	---	
E26	MOBILE DOUBLE-SIDED MILK COOLER	FLOOR	0.82	6.8	120	1	3/4"	2#12	1#12	20/1	2K1	21	
E27	MOBILE DBL-SIDED FRUIT/VEGIE BAR	FLOOR	0.90	7.5	120	1	3/4"	2#12	1#12	20/1	2K1	21	
E28	MOBILE DBL-SIDED FRUIT/VEGIE BAR	FLOOR	0.90	7.5	120	1	3/4"	2#12	1#12	20/1	2K1	23	
E29	POINT OF SALE SYSTEM	FLOOR	1.00	8.3	120	1	3/4"	2#12	1#12	20/1	2K1	23	
E30	CUBE ICE MACHINE	WALL	1.38	11.5	120	1	3/4"	2#12	1#12	20/1	2K1	34	
E31	WAREWASHER (TANK HEAT/MOTORS)	WALL	2.82	3.4	480	3	3/4"	4#12	1#12	20/3	4K1	1,3,5	
E32	WAREWASHER BOOSTER HEATER	WALL	33.34	40.1	480	3	1-1/2"	4#6	1#8	50/3	4K1	7,9,11	
E33	WAREWASHER DETERGENT FEED	WALL	1.44	12.0	120	1	3/4"	2#12	1#12	20/1	2K1	25	
E34	WASTE COLLECTOR	WALL	0.67	3.2	208	3	3/4"	4#12	1#12	20/3	2K1	28,30,32	

GENERAL NOTES:

A. REFER TO THE KITCHEN CONSULTANT DOCUMENTS FOR FURTHER DETAILS, NOTES AND ELECTRICAL INSTALLATION INSTRUCTIONS.

2 KITCHEN EQUIPMENT SCHEDULE

3/16" = 1'-0"

GENERAL NOTES:

A. AREA ABOVE ALL ELECTRICAL PANELS AND SWITCH BOARDS SHALL BE KEPT CLEAR OF ALL EQUIPMENT FOREIGN TO THE ELECTRICAL INSTALLATION INCLUDING PIPING, DUCTWORK, SUPPORTS, ETC. COORDINATE INSTALLATION WITH ALL OTHER TRADES.

B. ALL PENETRATIONS AND ROUTING PATHS OF EXPOSED CONDUIT SHALL BE COORDINATED AND REVIEWED BY ARCHITECT AND ENGINEER PRIOR TO INSTALLATION.

C. PROVIDE SEPARATE NEUTRAL CONDUCTOR FOR EACH BRANCH CIRCUIT, SHARED NEUTRALS ARE NOT PERMITTED.

D. PROVIDE NO MORE THAN (6) CURRENT CARRYING CONDUCTORS PER HOMERUN.

E. REFER TO KITCHEN CONSULTANT DOCUMENTS FOR FURTHER DETAILS, NOTES AND ELECTRICAL INSTALLATION INSTRUCTIONS.

F. ALL RECEPTACLES WITHIN KITCHEN AREA SHALL BE GFCI TYPE PER NEC.

NOTES:

1. LIMIT SWITCH FOR WAREWASHER. INTERCONNECT SWITCH AND WAREWASHER. SWITCH PROVIDED BY FOOD SERVICE VENDOR.

2. PROVIDE SWITCH AND POWER CONNECTION TO EXAUST FAN ON ROOF AND INTERLOCK WITH MAKE-UP AIR SUPPLY UNIT.

3. PROVIDE MANUAL FIRE SUPPRESSION PULL STATION WITH EMPTY CONDUIT TO FIRE SUPPRESSION CONTROL HEAD .

4. CONTROLLER TO MONITOR WALK-IN EVAPORATORS AND CONDENSING UNITS. PROVIDE RACEWAY PER KITCHEN CONSULTANT REQUIRMENTS.

5. AIR COOLED CONDENSING UNITS TO BE SET ON ROOF. PROVIDE SMART CONTROLLER WITH LOW VOLTAGE WIRING TO UNIT.

6. MOTORIZED SKYLIGHT. COORDINATE EXACT LOCATION WITH ARCHITECT.

7. PROVIDE CONNECTION TO SECTIONAL DOORS.

8. RECPTACLE FOR LCD DISPLAY SHALL BE BE MOUNTED AT 108" AFF.

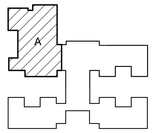

PIVOT ARCHITECTURE

REGISTERED PROFESSIONAL ENGINEER 11612 OREGON JAN 16, 1987 STEPHEN J. TURNA
10-23-14
EXPIRES: 6-30-16

PAE
Portland | San Francisco | Seattle
pae-engineers.com

HOWARD RECONCILED SET
EUGENE SCHOOL DISTRICT
700 HOWARD AVE, EUGENE, OREGON 97404
HOWARD ELEMENTARY SCHOOL

ENLARGED PLAN - KITCHEN - ELECTRICAL

PROJECT #	1336
ISSUE DATE:	10/28/2014
DRAWN:	AMT
CHECKED:	SJT
REVISIONS:	

E181

PRINTED ON: 10/23/2014 3:15:12 PM FROM FILE: C:\Revit Local Files\13-1532_HES MEP14\13-1532_HES MEP14_stacy.hansen.rvt

© 2014 PIVOT ARCHITECTURE

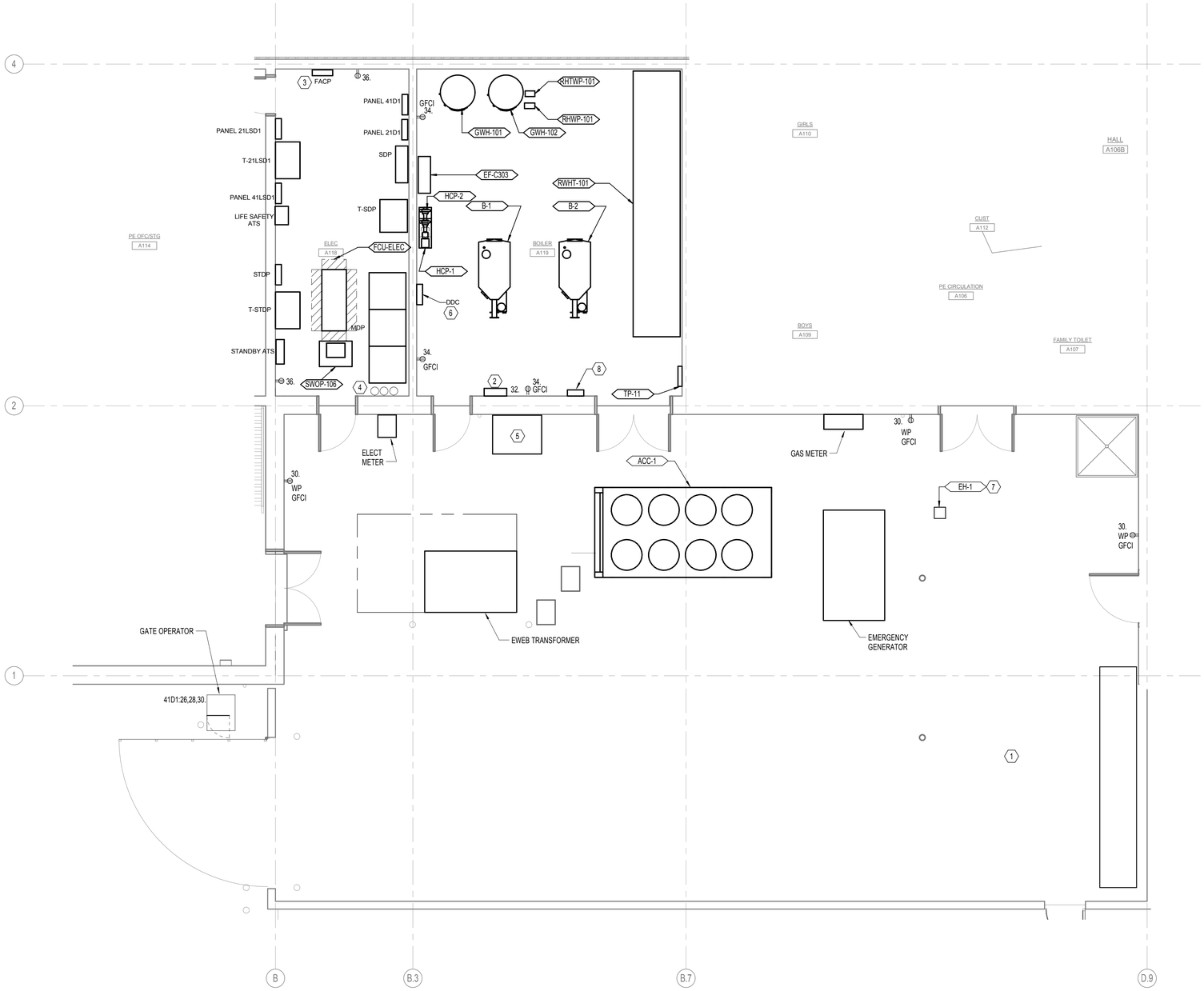

1 SECTOR A PARTIAL ELECTRICAL PLAN - BOILER ROOM & YARD
1/4" = 1'-0"

GENERAL NOTES:

A. ALL RECEPTACLES SHOWN ON THIS SHEET SHALL BE PROVIDED WITH BRANCH CIRCUITS FROM PANEL '21D1', UNLESS OTHERWISE NOTED.

B. AREA ABOVE ALL ELECTRICAL PANELS AND SWITCH BOARDS SHALL BE KEPT CLEAR OF ALL EQUIPMENT FOREIGN TO THE ELECTRICAL INSTALLATION INCLUDING PIPING, DUCTWORK, SUPPORTS, ETC. COORDINATE INSTALLATION WITH ALL OTHER TRADES.

C. ALL PENETRATIONS AND ROUTING PATHS OF EXPOSED CONDUIT SHALL BE COORDINATED AND REVIEWED BY ARCHITECT AND ENGINEER PRIOR TO INSTALLATION.

D. PROVIDE SEPARATE NEUTRAL CONDUCTOR FOR EACH BRANCH CIRCUIT, SHARED NEUTRALS ARE NOT PERMITTED.

E. PROVIDE NO MORE THAN (6) CURRENT CARRYING CONDUCTORS PER HOMERUN.

F. REFER TO MECHANICAL EQUIPMENT CONNECTION SCHEDULE ON SHEET E701 AND E702 FOR ADDITIONAL INFORMATION.

NOTES:

1. COMPACTOR DUMPSTER TO BE SERVED BY CIRCUITS 14, 16, 18 IN PANEL '41D1'.

2. PROVIDE CONNECTION TO IRRIGATION CONTROLLERS. COORDINATE EXACT LOCATION WITH LANDSCAPE ARCHITECT. STUB UP TWO (2) 4" CONDUITS UNDER IRRIGATION CONTROLLERS AND EXTEND TO OUTSIDE OF BUILDING. COORDINATE LOCATION OF CONDUITS WITH LANDSCAPE CONTRACTOR.

3. FIRE ALARM CONTROL PANEL TO BE SERVED BY CIRCUITS IN PANEL '21LSD1'.

4. (3) 4 INCH CONDUITS TO IDF ABOVE.

5. LOCATION FOR FUTURE MANUAL TRANSFER SWITCH.

6. DDC PANEL. COORDINATE EXACT LOCATION WITH MECHANICAL CONTROL CONTRACTOR.

7. SEE KITCHEN EQUIPMENT CONNECTION SCHEDULE ON SHEET E181 FOR ADDITIONAL INFORMATION.

8. SWOP-1 CONTROLLER. PROVIDE CONNECTION TO SWOP-1 PER MECHANICAL EQUIPMENT CONNECTION SCHEDULE ON SHEET E702.

PIVOT ARCHITECTURE

REGISTERED PROFESSIONAL ENGINEER
OREGON
JULY 16, 1987
STEPHEN J. TURNA
EXPIRES: 6-30-16
10-23-14

PAE
Portland | San Francisco | Seattle
pae-engineers.com

HOWARD RECONCILED SET
EUGENE SCHOOL DISTRICT
700 HOWARD AVE, EUGENE, OREGON 97404
4J
HOWARD ELEMENTARY SCHOOL

SECTOR A PARTIAL ELECTRICAL PLAN
BOILER ROOM & YARD

PROJECT #:	1336
ISSUE DATE:	10/28/2014
DRAWN:	AMT
CHECKED:	SJT

REVISIONS

E411

PRINTED ON: 10/23/2014 3:15:15 PM FROM FILE: C:\Revit Local Files\13-1532_HES MEP14\13-1532_HES MEP14_stacy.hansen.rvt

© 2014 PIVOT ARCHITECTURE

GENERAL NOTES:

A. COORDINATE INSTALLATION OF LUMINAIRES WITH DUCTWORK.

B. AREA ABOVE ALL ELECTRICAL PANELS AND SWITCH BOARDS SHALL BE KEPT CLEAR OF ALL EQUIPMENT FOREIGN TO THE ELECTRICAL INSTALLATION INCLUDING PIPING, DUCTWORK, SUPPORTS, ETC. COORDINATE INSTALLATION WITH ALL OTHER TRADES.

C. ALL PENETRATIONS AND ROUTING PATHS OF EXPOSED CONDUIT SHALL BE COORDINATED AND REVIEWED BY ARCHITECT AND ENGINEER PRIOR TO INSTALLATION.

D. PROVIDE SEPARATE NEUTRAL CONDUCTOR FOR EACH BRANCH CIRCUIT, SHARED NEUTRALS ARE NOT PERMITTED.

E. PROVIDE NO MORE THAN (6) CURRENT CARRYING CONDUCTORS PER HOMERUN.

F. REFER TO MECHANICAL EQUIPMENT CONNECTION SCHEDULE ON SHEET E701 AND E702 FOR ADDITIONAL INFORMATION.

G. CIRCUIT NUMBER SHOWN NEXT TO LUMINAIRES SHALL BE CIRCUITED TO PANEL '4LA1', UNLESS OTHERWISE NOTED.

NOTES:

1. RECEPTACLES TO SERVE IDF EQUIPMENT. CIRCUITS ORIGINATE IN PANEL 21LSD1.

2. PROVIDE UL924 DEVICE FOR EMERGENCY LUMINAIRES IN THIS AREA. EMERGENCY CIRCUIT SHOWN ON PLAN.

3. (3) 2 INCH CONDUITS FOR TELECOMMUNICATIONS CABLING. CABLING BY OTHERS.

4. LOCATION FOR PV INVERTERS.

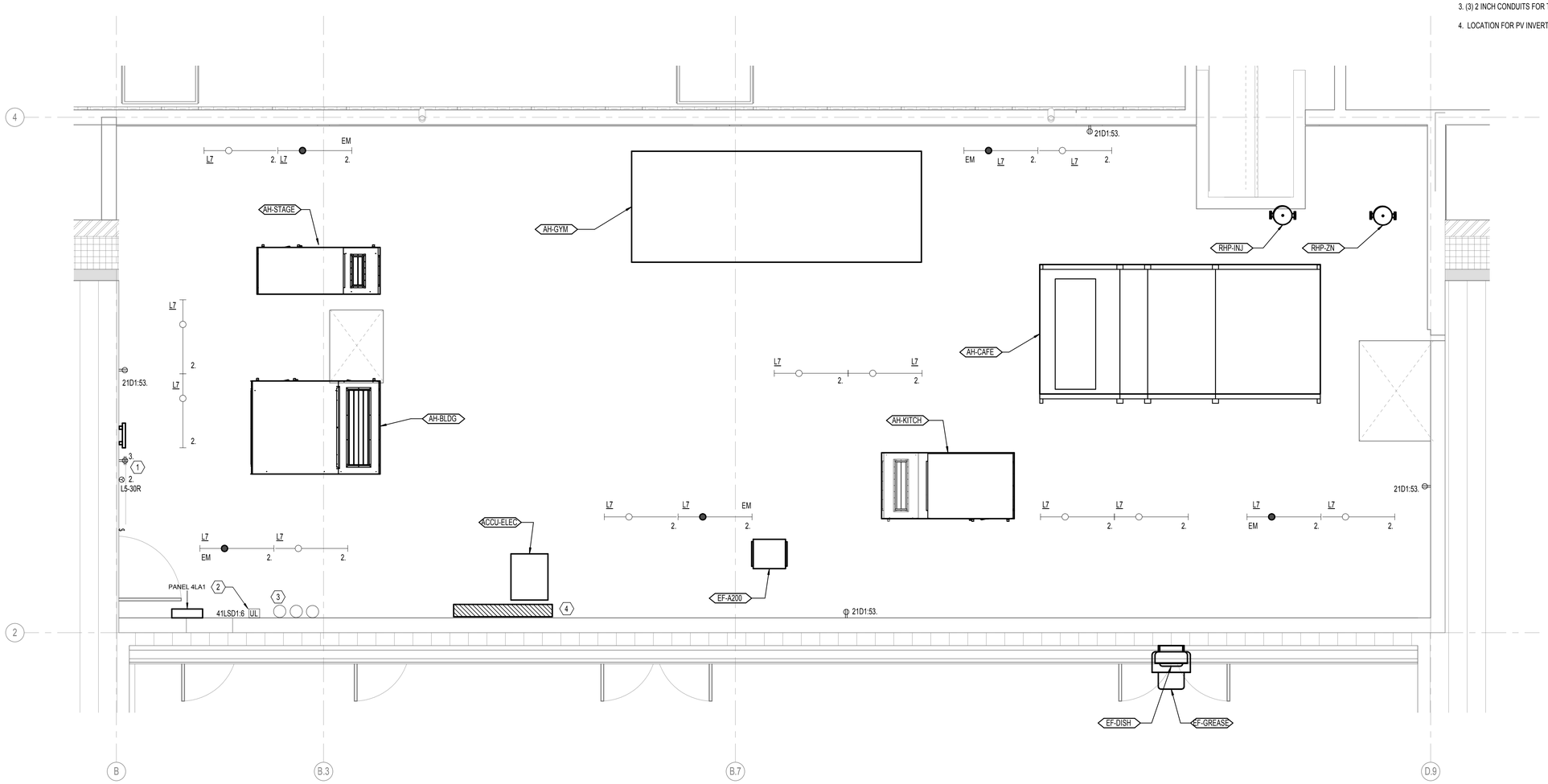

1 SECTOR A PARTIAL ELECTRICAL PLAN - LOFT
3/8" = 1'-0"

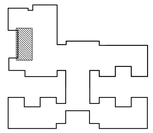

PIVOT ARCHITECTURE

REGISTERED PROFESSIONAL ENGINEER
STEPHEN J. TURNIA
OREGON
JULY 16, 1985
10-23-14
EXPIRES: 6-30-16

PAE
Portland | San Francisco | Seattle
pae-engineers.com

HOWARD RECONCILED SET
EUGENE SCHOOL DISTRICT
700 HOWARD AVE, EUGENE, OREGON 97404
HOWARD ELEMENTARY SCHOOL

SECTOR A PARTIAL ELECTRICAL PLAN
LOFT

PROJECT #	1306
ISSUE DATE:	10/28/2014
DRAWN:	AMT
CHECKED:	SJT

REVISIONS

E412

PRINTED ON: 10/23/2014 3:15:18 PM FROM FILE: C:\Revit Local Files\13-1532_HES MEP\14-1532_HES MEP14_stacy.hansen.rvt

© 2014 PIVOT ARCHITECTURE

GENERAL NOTES:

A. COORDINATE INSTALLATION OF LUMINAIRES WITH DUCTWORK.

B. AREA ABOVE ALL ELECTRICAL PANELS AND SWITCH BOARDS SHALL BE KEPT CLEAR OF ALL EQUIPMENT FOREIGN TO THE ELECTRICAL INSTALLATION INCLUDING PIPING, DUCTWORK, SUPPORTS, ETC. COORDINATE INSTALLATION WITH ALL OTHER TRADES.

C. ALL PENETRATIONS AND ROUTING PATHS OF EXPOSED CONDUIT SHALL BE COORDINATED AND REVIEWED BY ARCHITECT AND ENGINEER PRIOR TO INSTALLATION.

D. PROVIDE SEPARATE NEUTRAL CONDUCTOR FOR EACH BRANCH CIRCUIT, SHARED NEUTRALS ARE NOT PERMITTED.

E. PROVIDE NO MORE THAN (6) CURRENT CARRYING CONDUCTORS PER HOMERUN.

F. REFER TO MECHANICAL EQUIPMENT CONNECTION SCHEDULE ON SHEET E701 AND E702 FOR ADDITIONAL INFORMATION.

G. CIRCUIT NUMBER SHOWN NEXT TO LUMINAIRES IN MECHANICAL LOFT B300 SHALL BE CIRCUITED TO PANEL '4LB1', UNLESS NOTED OTHERWISE.

H. CIRCUIT NUMBER SHOWN NEXT TO LUMINAIRES IN MECHANICAL LOFT B301 SHALL BE CIRCUTED TO PANEL '4LB2', UNLESS NOTED OTHERWISE.

NOTES:

1. INSTALL LIGHT SWITCH SUCH THAT IT IS IN REACH OF THE STAIR LANDING.

2. PROVIDE UL924 DEVICE FOR EMERGENCY LUMINAIRES IN THIS AREA. EMERGENCY CIRCUIT SHOWN ON PLAN.

3. REFER TO THE LIGHTING RELAY SCHEDULE ON SHEET E703 FOR ADDITIONAL INFORMATION.

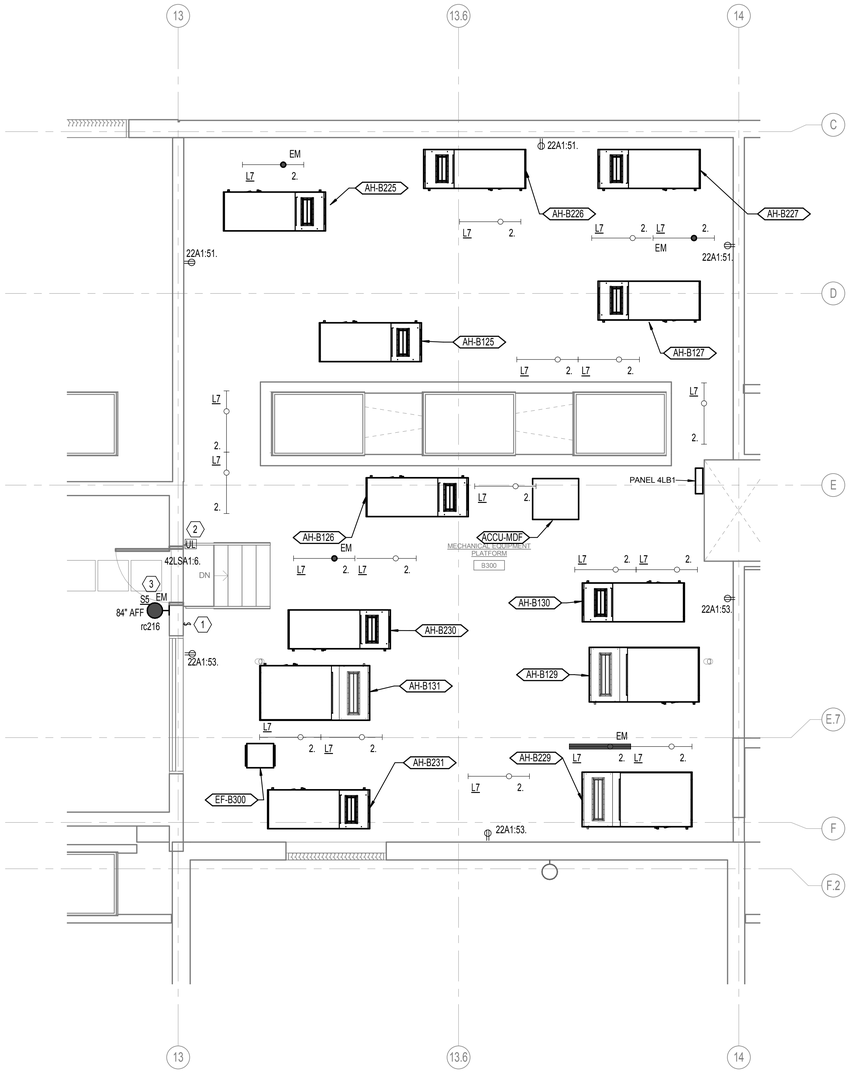

2 SECTOR B2 MECHANICAL LOFT PARTIAL PLAN - LIGHTING
1/4" = 1'-0"

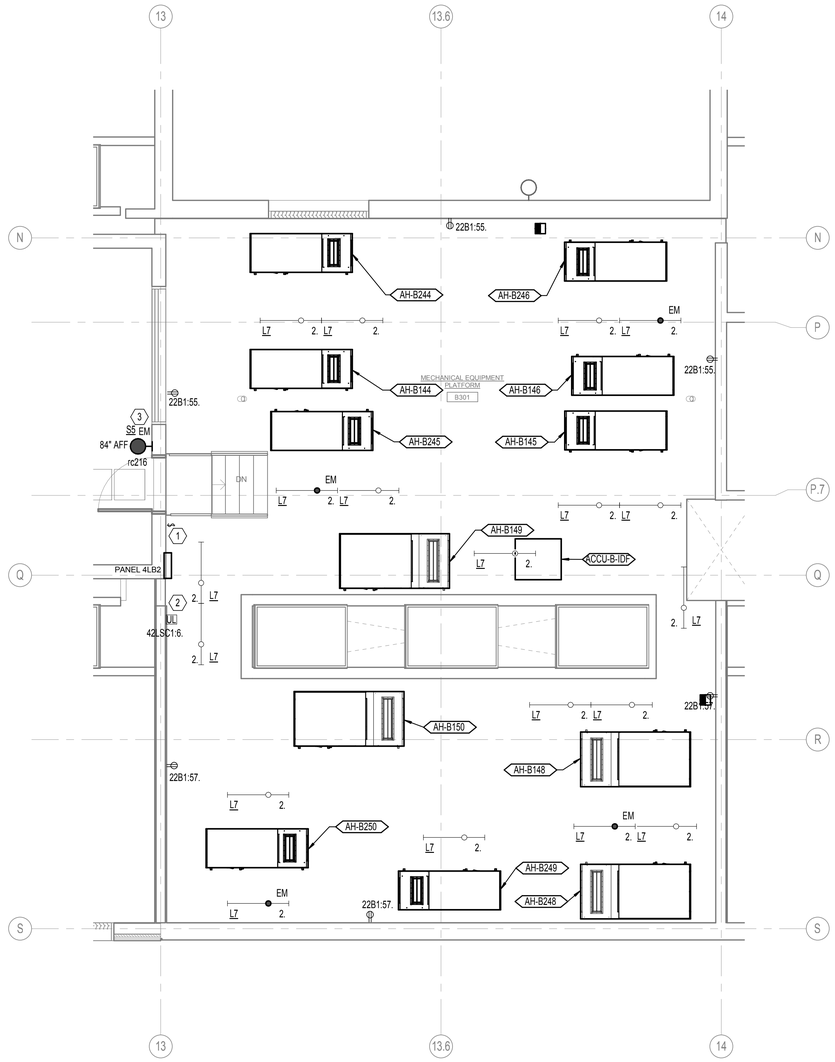

1 SECTOR B3 MECHANICAL LOFT PARTIAL PLAN - LIGHTING
1/4" = 1'-0"

NORTH

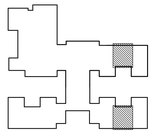

PIVOT ARCHITECTURE

REGISTERED PROFESSIONAL ENGINEER
STEPHEN J. TURNIA
EXPIRES: 6-30-16

PAE
Portland | San Francisco | Seattle
pae-engineers.com

HOWARD RECONCILED SET
EUGENE SCHOOL DISTRICT
700 HOWARD AVE, EUGENE, OREGON 97404
HOWARD ELEMENTARY SCHOOL

SECTOR B PARTIAL ELECTRICAL PLAN
LOFTS

PROJECT #	1335
ISSUE DATE:	10/28/2014
DRAWN:	AMT
CHECKED:	SJT

REVISIONS

E413

PRINTED ON: 10/23/2014 3:15:26 PM FROM FILE: C:\Revit Local Files\13-1532_HES MEP\413-1532_HES MEP14_stacy.hansen.rvt

© 2014 PIVOT ARCHITECTURE

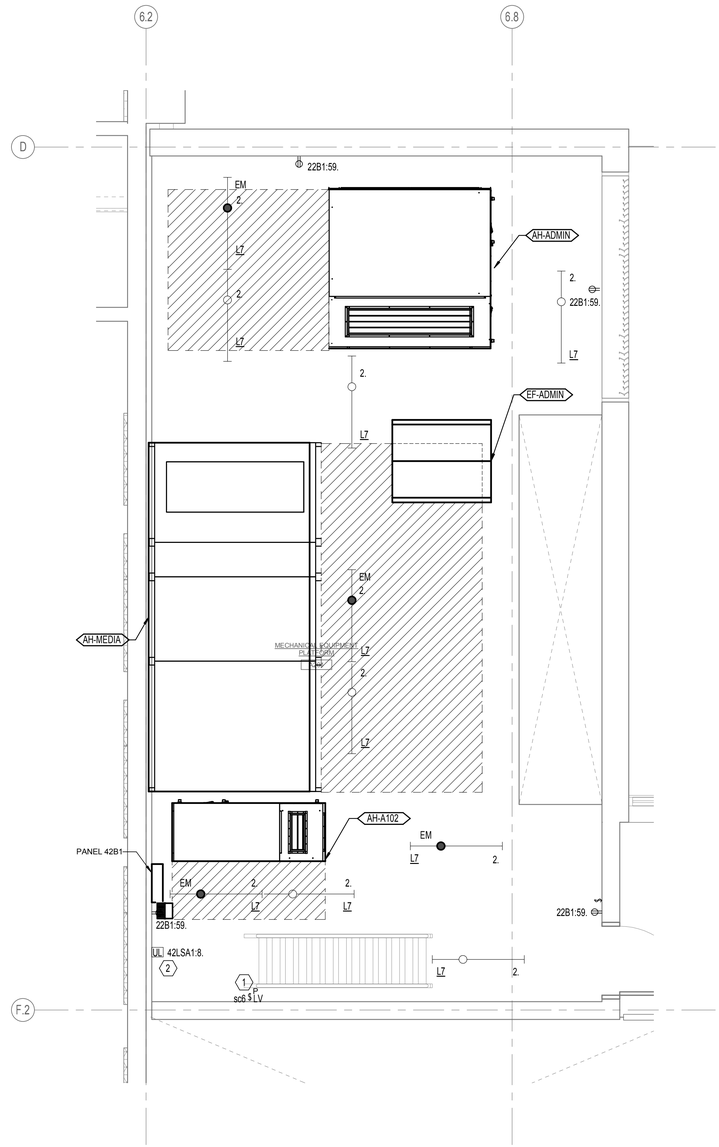

1 SECTOR B PARTIAL ELECTRICAL PLAN - LOFT
3/8" = 1'-0"

GENERAL NOTES:

A. COORDINATE INSTALLATION OF LUMINAIRES WITH DUCTWORK.

B. AREA ABOVE ALL ELECTRICAL PANELS AND SWITCH BOARDS SHALL BE KEPT CLEAR OF ALL EQUIPMENT FOREIGN TO THE ELECTRICAL INSTALLATION INCLUDING PIPING, DUCTWORK, SUPPORTS, ETC. COORDINATE INSTALLATION WITH ALL OTHER TRADES.

C. ALL PENETRATIONS AND ROUTING PATHS OF EXPOSED CONDUIT SHALL BE COORDINATED AND REVIEWED BY ARCHITECT AND ENGINEER PRIOR TO INSTALLATION.

D. PROVIDE SEPARATE NEUTRAL CONDUCTOR FOR EACH BRANCH CIRCUIT, SHARED NEUTRALS ARE NOT PERMITTED.

E. PROVIDE NO MORE THAN (6) CURRENT CARRYING CONDUCTORS PER HOMERUN.

F. REFER TO MECHANICAL EQUIPMENT CONNECTION SCHEDULE ON SHEET E701 AND E702 FOR ADDITIONAL INFORMATION.

G. CIRCUIT NUMBER SHOWN NEXT TO LUMINAIRES SHALL BE CIRCUITED TO PANEL '42B1', UNLESS OTHERWISE NOTED.

NOTES:

1. SWITCH TO CONTROL TYPE S5 LUMINAIRES AT ENTRIES TO LOFTS IN SECTORS A, B, AND C. REFER TO THE LIGHTING RELAY SCHEDULE ON SHEET E703 FOR ADDITIONAL INFORMATOIN. INSTALL LIGHT SWITCH SUCH THAT IT IS IN REACH OF THE STAIR LANDING.

2. PROVIDE UL924 DEVICE FOR EMERGENCY LUMINAIRES IN THIS AREA. EMERGENCY CIRCUITS SHOWN ON PLAN.

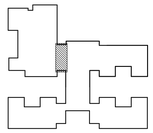

PIVOT ARCHITECTURE

REGISTERED PROFESSIONAL ENGINEER 11612 OREGON JAN 16, 1987 STEPHEN J. TURNIA
10-23-14
EXPIRES: 6-30-16

PAE
Portland | San Francisco | Seattle
pae-engineers.com

HOWARD RECONCILED SET
EUGENE SCHOOL DISTRICT
700 HOWARD AVE, EUGENE, OREGON 97404
HOWARD ELEMENTARY SCHOOL

SECTOR B PARTIAL ELECTRICAL PLAN
LOFT

PROJECT #:	1336
ISSUE DATE:	10/28/2014
DRAWN:	AMT
CHECKED:	SJT
REVISIONS:	

E414

PRINTED ON: 10/23/2014 3:15:30 PM FROM FILE: C:\Revit Local Files\13-1532_HES MEP\413-1532_HES MEP14_stacy.hansen.rvt

© 2014 PIVOT ARCHITECTURE

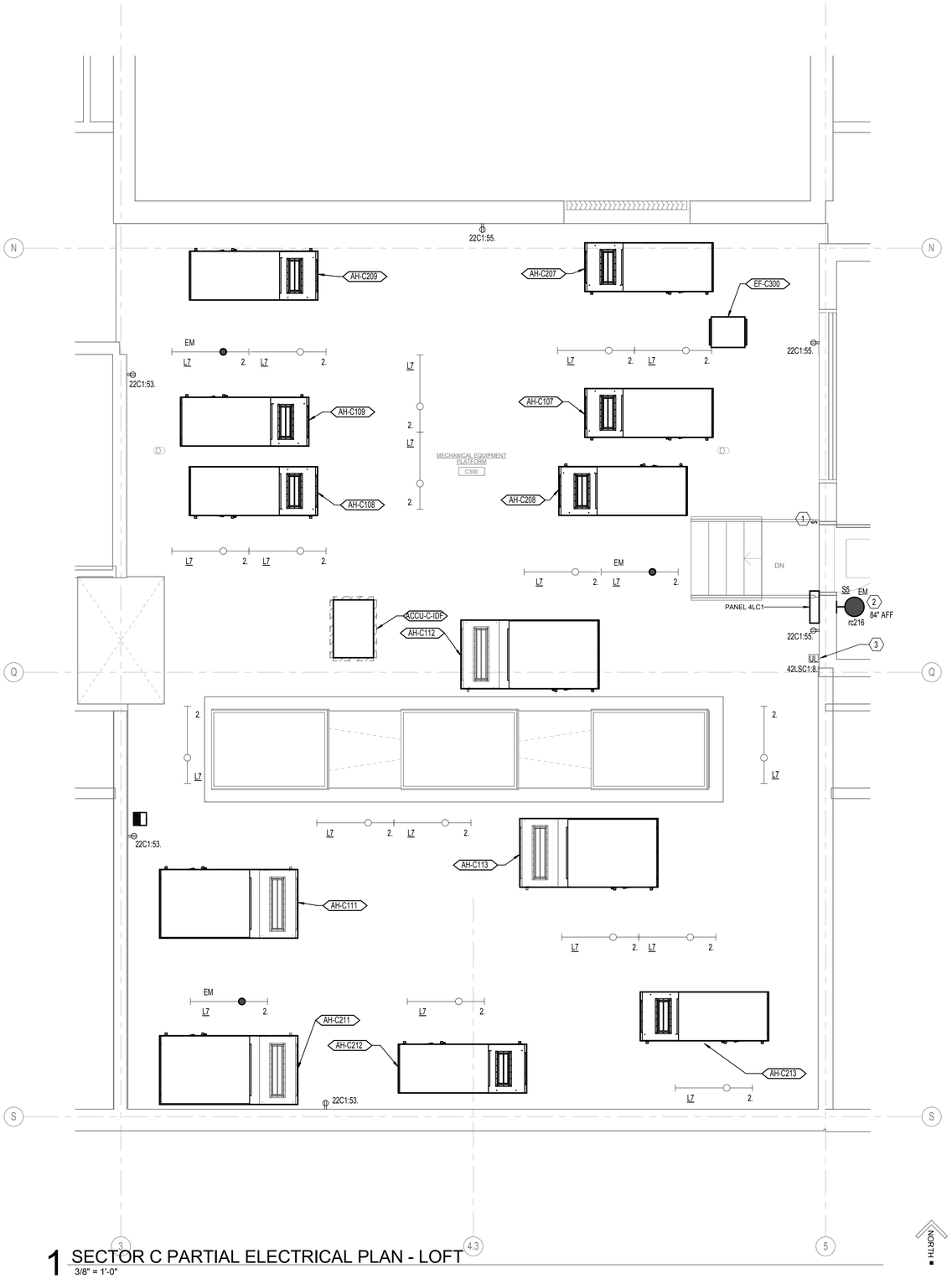

1 SECTOR C PARTIAL ELECTRICAL PLAN - LOFT
3/8" = 1'-0"

GENERAL NOTES:

A. COORDINATE INSTALLATION OF LUMINAIRES WITH DUCTWORK.

B. AREA ABOVE ALL ELECTRICAL PANELS AND SWITCH BOARDS SHALL BE KEPT CLEAR OF ALL EQUIPMENT FOREIGN TO THE ELECTRICAL INSTALLATION INCLUDING PIPING, DUCTWORK, SUPPORTS, ETC. COORDINATE INSTALLATION WITH ALL OTHER TRADES.

C. ALL PENETRATIONS AND ROUTING PATHS OF EXPOSED CONDUIT SHALL BE COORDINATED AND REVIEWED BY ARCHITECT AND ENGINEER PRIOR TO INSTALLATION.

D. PROVIDE SEPARATE NEUTRAL CONDUCTOR FOR EACH BRANCH CIRCUIT, SHARED NEUTRALS ARE NOT PERMITTED.

E. PROVIDE NO MORE THAN (6) CURRENT CARRYING CONDUCTORS PER HOMERUN.

F. REFER TO MECHANICAL EQUIPMENT CONNECTION SCHEDULE ON SHEET E701 AND E702 FOR ADDITIONAL INFORMATION.

G. CIRCUIT NUMBER SHOWN NEXT TO LUMINAIRES SHALL BE CIRCUITED TO PANEL '4LC1', UNLESS OTHERWISE NOTED.

NOTES:

1. INSTALL LIGHT SWITCH SUCH THAT IT IS IN REACH OF THE STAIR LANDING.

2. REFER TO THE LIGHTING RELAY SCHEDULE ON SHEET E703 FOR ADDITIONAL INFORMATION.

3. PROVIDE UL924 DEVICE FOR EMERGENCY LUMINAIRES IN THIS AREA. EMERGENCY CIRCUIT SHOWN ON PLAN.

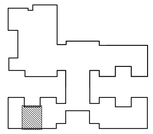

PIVOT ARCHITECTURE

REGISTERED PROFESSIONAL ENGINEER 11612 OREGON JULY 16, 1985 STEPHEN J. TURNA
EXPIRES: 6-30-16
10-23-14

PAE
Portland | San Francisco | Seattle
pae-engineers.com

HOWARD RECONCILED SET
EUGENE SCHOOL DISTRICT
700 HOWARD AVE, EUGENE, OREGON 97404
HOWARD ELEMENTARY SCHOOL

SECTOR C PARTIAL ELECTRICAL PLAN
LOFT

PROJECT #	1.536
ISSUE DATE:	10/28/2014
DRAWN:	AMT
CHECKED:	SJT

REVISIONS

E415

PRINTED ON: 10/23/2014 3:15:35 PM FROM FILE: C:\Revit Local Files\13-1532_HES MEP14\13-1532_HES MEP14_stacy.hansen.rvt

© 2014 PIVOT ARCHITECTURE

PRINTED ON: 10/23/2014 3:15:39 PM FROM FILE: C:\Revit Local Files\13-1532_HES MEP14\13-1532_HES MEP14_staby.hansen.rvt

GENERAL NOTES:

A. PV PANEL LAYOUT IS DIAGRAMMATIC ONLY. PV SYSTEM IS DESIGN/BUILT BY THE CONTRACTOR. COORDINATE FINAL PV PANEL LAYOUT WITH ARCHITECT AND STRUCTURAL DRAWINGS. REFERENCE SPECIFICATION FOR ADDITONAL INFORMATION.

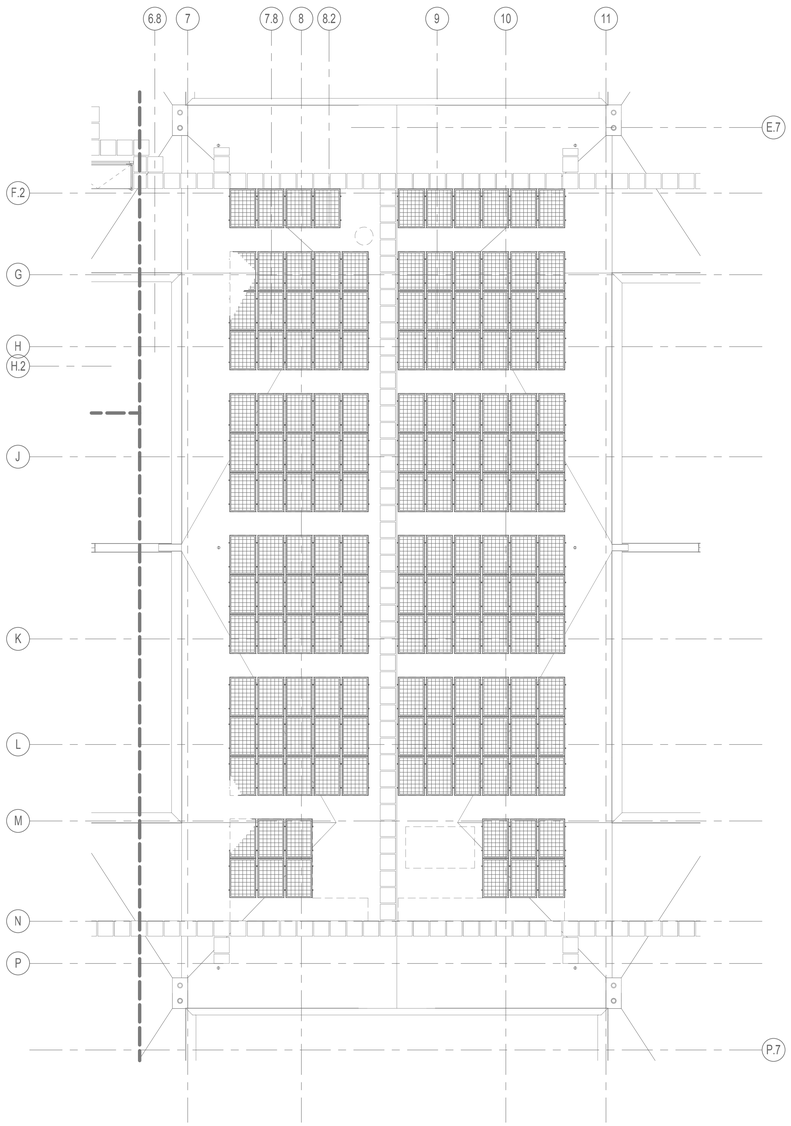

1 MEDIA ROOF - POWER
1/8" = 1'-0"

NORTH

PIVOT ARCHITECTURE

REGISTERED PROFESSIONAL ENGINEER
STEPHEN J. TURNA
OREGON
JAN 16, 1985
EXPIRES: 6-30-16
10-23-14

PAE
Portland | San Francisco | Seattle
pae-engineers.com

HOWARD RECONCILED SET
EUGENE SCHOOL DISTRICT
700 HOWARD AVE, EUGENE, OREGON 97404
HOWARD ELEMENTARY SCHOOL

MEDIA ROOF - POWER

PROJECT #	1336
ISSUE DATE:	10/28/2014
DRAWN:	AMT
CHECKED:	SJT
REVISIONS:	

E416

© 2014 PIVOT ARCHITECTURE

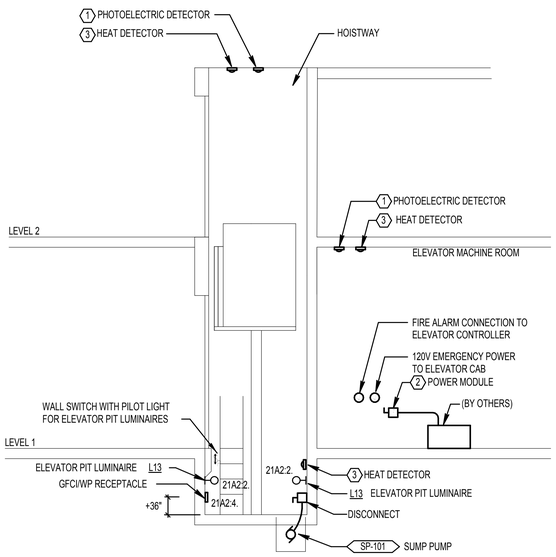

GENERAL NOTES:

A. COMMUNICATION CONNECTION TO ELEVATOR IS SHOWN ON LOW VOLTAGE DRAWINGS

NOTES:

1. CONNECT AUXILLARY CONTACTS IN DETECTOR TO ELEVATOR CONTROLLER FOR ELEVATOR RECALL.
2. PROVIDE ELEVATOR POWER MODULE (WITH INTEGRAL SHUNT TRIP). CONNECT SHUNT TRIP CONTROL VIA HEAT DETECTORS' AUXILIARY CONTACTS IN HOISTWAY, EQUIPMENT ROOM AND PIT TO POWER MODULE. POWER SHALL BE AUTOMATICALLY DISCONNECTED UPON INITIATION OF ANY OF THESE HEAT DETECTORS.
3. CONNECT AUXILLARY CONTACTS IN HEAT DETECTOR TO POWER MODULE IN EQUIPMENT ROOM FOR ELEVATOR POWER SHUTDOWN.

3 ELEVATOR DETIAL
NONE

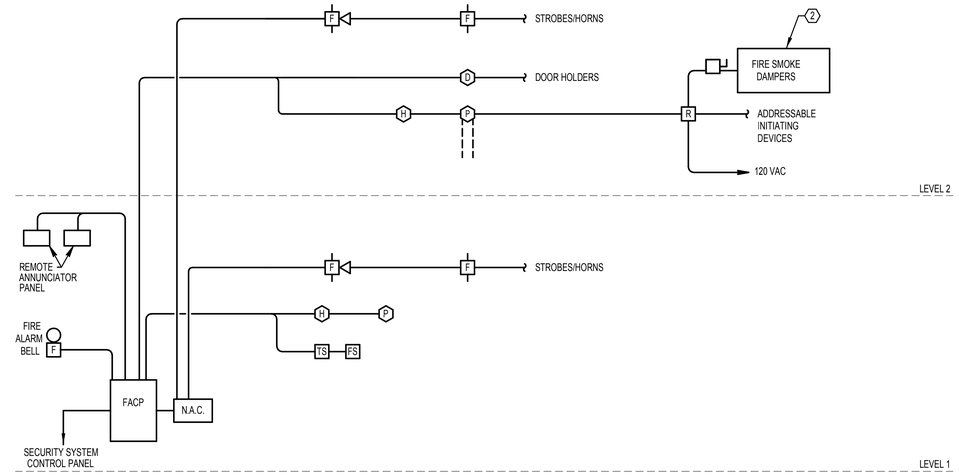

NOTES:

1. PROVIDE CONNECTION TO SECURITY SYSTEM CONTROL PANEL UTILIZING 18/4 CABLE.
2. LOCATION AND QUANTITY OF FSD'S ARE SHOWN ON MECHANICAL DRAWINGS.

1 E - FIRE ALARM SYSTEM RISER DIAGRAM
NONE

TABLE 1, TRANSFORMER GROUND ELECTRODE CONDUCTOR SIZE (PER NEC TABLE 250.66) 480 - 208/120Y VAC, 3 PHASE	
TRANSFORMER KVA	GROUND ELECTRODE SIZE AWG
3	8
6	8
9	8
15	8
30	8
45	4
75	2
112.5	1/0
150	2/0
225	2/0
300	3/0
500	3/0
750	3/0
1000	3/0

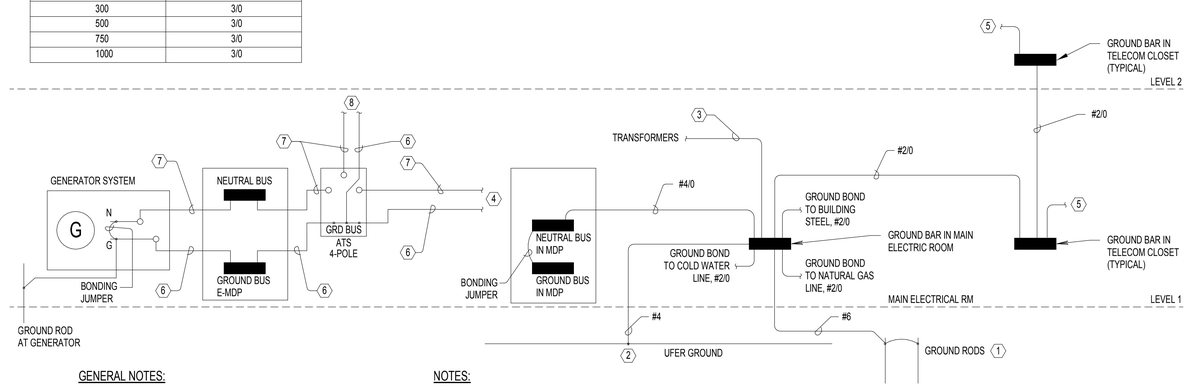

GENERAL NOTES:

1. ALL GROUNDING CONDUCTORS SHALL BE BARE COPPER CONDUCTORS, PROVIDE PVC RACEWAY AS NEEDED FOR PROTECTION.

NOTES:

1. PROVIDE TWO 5/8" GROUND RODS, 10' APART.
2. PROVIDE A 20 FOOT LENGTH OF #4 BARE COPPER CONDUCTOR, EMBEDDED IN THE BOTTOM PORTION OF THE CONCRETE SLAB, ELECTRODE TO BE ENCASED BY A MINIMUM OF 2" CONCRETE - OR - CONNECT TO A STEEL REINFORCING BAR WITH A MINIMUM OF 20 FOOT LENGTH AND 1/2" SIZE.
3. SIZE THE TRANSFORMER GROUNDING ELECTRODE CONDUCTOR PER TABLE 1.
4. EQUIPMENT GROUND CONDUCTOR AND NEUTRAL CONDUCTOR ROUTED TO NORMAL POWER SOURCE PANEL. REFER TO ONE-LINE DRAWING.
5. PROVIDE GROUND BOND CONNECTIONS TO THE TELECOM ROOM: CABLE TRAY, EQUIPMENT RACKS, SIGNAL CONDUITS AND MISC EQUIPMENT PER BICSI STANDARDS.
6. EQUIPMENT GROUNDING CONDUCTOR (INSULATED) INCLUDED WITH THE FEEDER.
7. NEUTRAL CONDUCTOR INCLUDED WITH THE FEEDER.
8. EQUIPMENT GROUND CONDUCTOR AND NEUTRAL CONDUCTOR INCLUDED IN FEEDER TO PANEL.

2 FIRE ALARM GROUNDING DETAIL
NONE

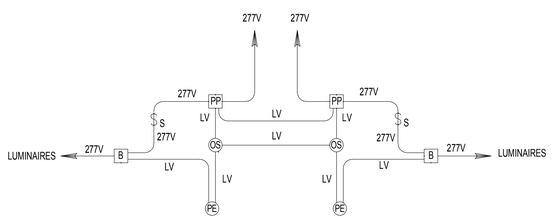

4 TYPICAL CLASSROOM LIGHTING CONTROL DIAGRAM
NONE

PIVOT ARCHITECTURE

REGISTERED PROFESSIONAL ENGINEER — OREGON — JULY 16, 1982 — STEPHEN J. TURNA — EXPIRES: 6-30-16 — 10-23-14

PAE — Portland | San Francisco | Seattle — pae-engineers.com

HOWARD RECONCILED SET
EUGENE SCHOOL DISTRICT 4J
700 HOWARD AVE, EUGENE, OREGON 97404
HOWARD ELEMENTARY SCHOOL

DETAILS - ELECTRICAL

PROJECT #	1330
ISSUE DATE:	10/28/2014
DRAWN:	AMT
CHECKED:	SJT

REVISIONS

E501

PRINTED ON: 10/23/2014 3:15:42 PM FROM FILE: C:\Revit Local Files\13-1532_HES MEP\413-1532_HES MEP14_alacy_harnsen.rvt

© 2014 PIVOT ARCHITECTURE

NOTES:

1. PROVIDE DEVICES FOR SELECTIVE COORDINATION OF SYSTEM PER NEC 700.27.
2. INSTALLATION OF CHILLER IS AN ADDITIVE ALTERNATE. INSTALLATION OF CIRCUIT BREAKER IS PART OF BASE BID.
3. REMOTE ANNUNCIATOR #1 LOCATED IN CUSTODIAL A116.
4. REMOTE ANNUNCIATOR #2 LOCATED ON WALL ADJACENT TO EMERGENCY GENERATOR. ANNUNCIATOR SHALL NOT BE INSTALLED ON THE GENERATOR,
5. PROVIDE A MINIMUM OF 3 BUSSED SPACES FOR FUTURE CIRCUIT BREAKERS.
6. PROVIDE SPACE IN MDP FOR FUTURE 1200 AMP, CIRCUIT BREAKER. FUTURE PROVISION TO INTERLOCK WITH MAIN CIRCUIT BREAKER TO BE UTILIZED FOR CONNECTION TO PORTABLE GENERATOR.
7. GROUND CONDUCTOR TO BE #2 AWG COPPER.
8. GROUND CONDUCTOR TO BE #8 AWG COPPER.
9. GROUND CONDUCTOR TO BE #6 AWG COPPER.

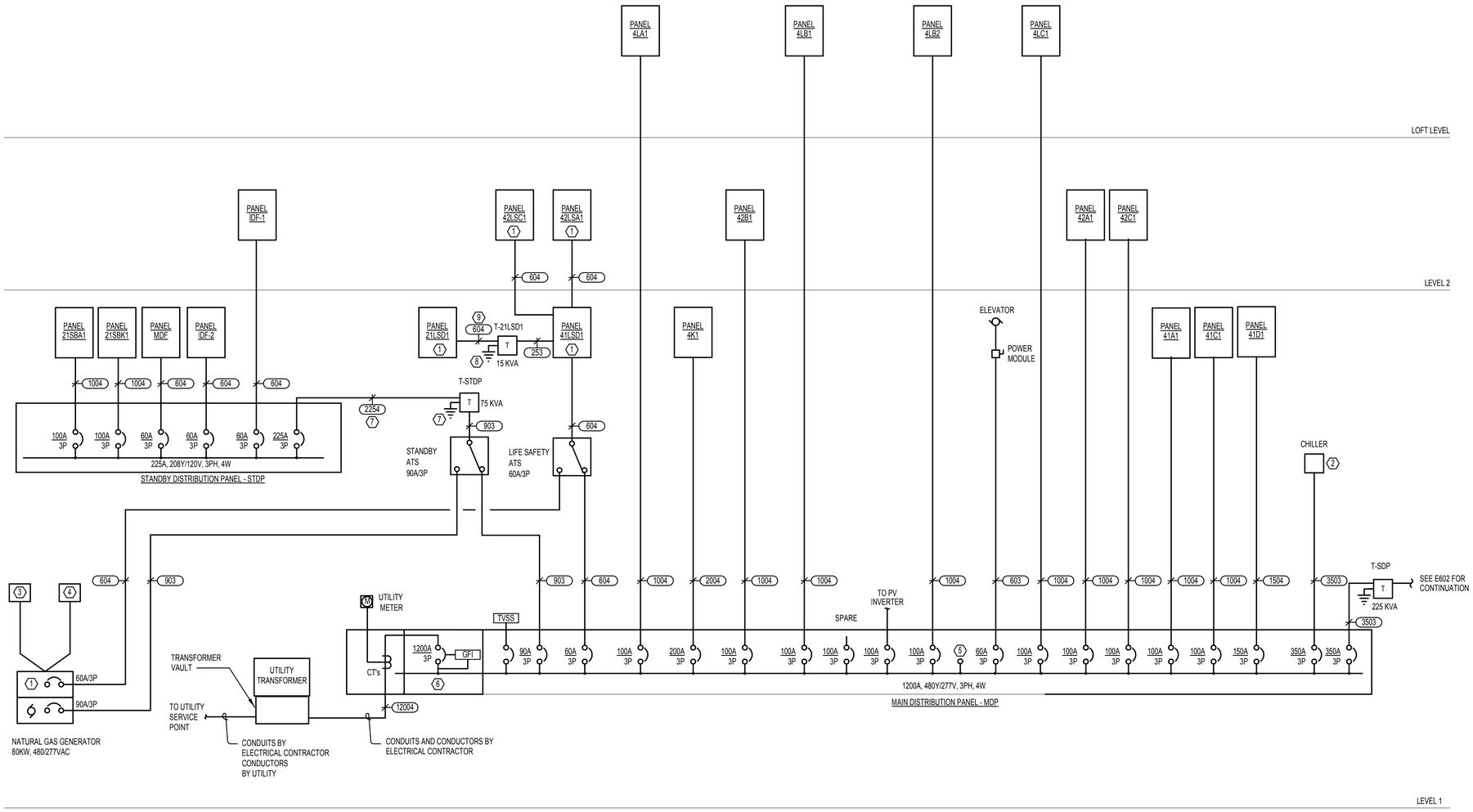

1 ONE LINE DIAGRAM - POWER (1 OF 2)

NONE

PIVOT ARCHITECTURE

REGISTERED PROFESSIONAL ENGINEER — OREGON — JUL 16, 1982 — STEPHEN J. TURNA — EXPIRES: 6-30-16

10-23-14

PAE — Portland | San Francisco | Seattle — pae-engineers.com

HOWARD RECONCILED SET

EUGENE SCHOOL DISTRICT 4J
700 HOWARD AVE, EUGENE, OREGON 97404
HOWARD ELEMENTARY SCHOOL

ONE LINE DIAGRAM - ELECTRICAL

PROJECT #	1336
ISSUE DATE:	10/28/2014
DRAWN:	AMT
CHECKED:	SJT

REVISIONS:

E601

PRINTED ON: 10/23/2014 3:15:43 PM FROM FILE: C:\Revit Local Files\13-1532_HES MEP14\13-1532_HES MEP14_stacy.hansen.rvt

© 2014 PIVOT ARCHITECTURE

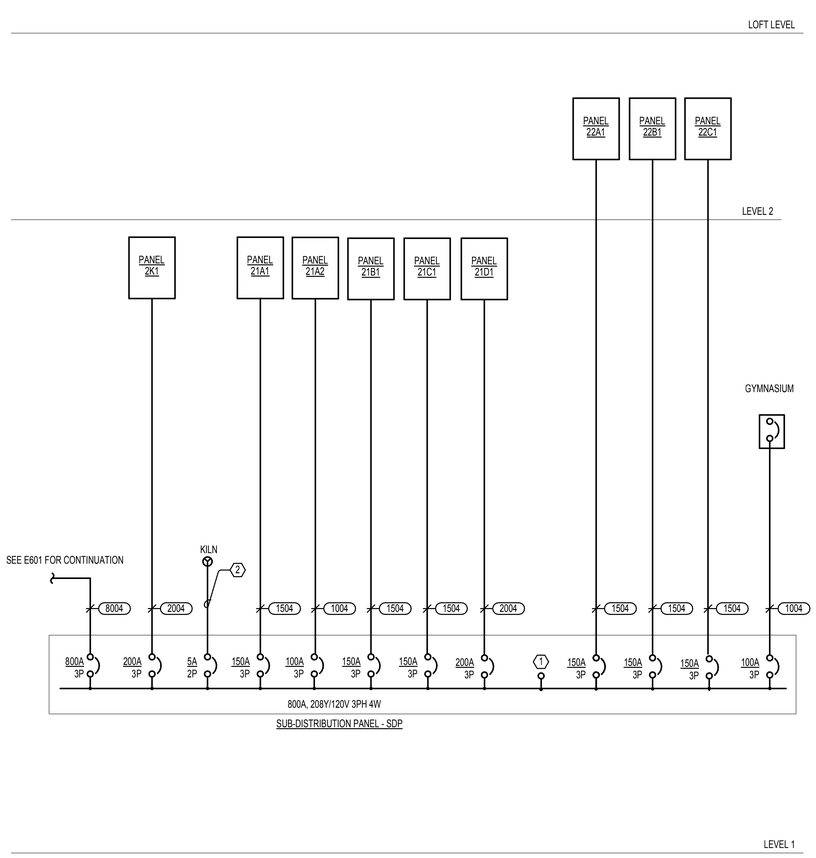

1 ONE LINE DIAGRAM - POWER (2 OF 2)
12" = 1'-0"

	FEEDER SCHEDULE COPPER: 3 PHASE, 3 WIRE + GROUND				FEEDER SCHEDULE COPPER: 3 PHASE, 4 WIRE + GROUND			
NOMINAL AMPACITY	TAG	CONDUIT SIZE (MIN)	PHASE CONDUCTORS	GROUND CONDUCTOR	TAG	CONDUIT SIZE (MIN)	PHASE & NEUTRAL CONDUCTORS	GROUND CONDUCTOR
20	203	1/2"	(3) #12	#12	204	1/2"	(4) #12	#12
30	303	1/2"	(3) #10	#10	304	3/4"	(4) #10	#10
40	403	3/4"	(3) #8	#10	404	3/4"	(4) #8	#10
50	503	3/4"	(3) #6	#10	504	1"	(4) #6	#10
60	603	1"	(3) #4	#10	604	1 1/4"	(4) #4	#10
70	703	1"	(3) #4	#8	704	1 1/4"	(4) #4	#8
80	803	1 1/4"	(3) #3	#8	804	1 1/4"	(4) #3	#8
90	903	1 1/4"	(3) #2	#8	904	1 1/4"	(4) #2	#8
100	1003	1 1/4"	(3) #1	#8	1004	1 1/2"	(4) #1	#8
110	1103	1 1/4"	(3) #1	#6	1104	1 1/2"	(4) #1	#6
125	1253	1 1/4"	(3) #1	#6	1254	2"	(4) #1/0	#4
150	1503	1 1/2"	(3) #1/0	#6	1504	2"	(4) #2/0	#4
175	1753	1 1/2"	(3) #2/0	#6	1754	2"	(4) #3/0	#4
200	2003	2"	(3) #3/0	#6	2004	2 1/2"	(4) #4/0	#4
225	2253	2"	(3) #4/0	#4	2254	2 1/2"	(4) 250KCM	#3
250	2503	2 1/2"	(3) 250KCM	#4	2504	3"	(4) 350KCM	#2
300	3003	2 1/2"	(3) 350KCM	#4	3004	3 1/2"	(4) 500KCM	#2
350	3503	3"	(3) 500KCM	#3	3504	(2) 2"	(8) #3/0	(2) #3
400	4003	(2) 2"	(6) #3/0	(2) #3	4004	(2) 2 1/2"	(8) #4/0	(2) #2
450	4503	(2) 2"	(6) #4/0	(2) #2	4504	(2) 3"	(8) 250KCM	(2) #1
500	5003	(2) 2 1/2"	(6) 250KCM	(2) #2	5004	(3) 2 1/2"	(12) #3/0	(3) #1
600	6003	(2) 3"	(6) 350KCM	(2) #1	6004	(2) 3 1/2"	(8) 500KCM	(2) #2/0
800	8003	(3) 3"	(9) 350KCM	(3) #1/0	8004	(3) 3"	(12) 350KCM	(3) #2/0
1000	10003	(3) 3"	(9) 500KCM	(3) #2/0	10004	(4) 3"	(16) 350KCM	(4) #2/0
1200	12003	(4) 3"	(12) 350KCM	(4) #3/0	12004	(4) 3 1/2"	(16) 500KCM	--
1600	16003	(5) 3"	(15) 500KCM	(5) #4/0	16004	(6) 3"	(24) 350KCM	(6) 250KCM
2000	20003	(6) 3"	(18) 500KCM	(6) 250KCM	20004	(6) 3 1/2"	(24) 500KCM	(6) 250KCM
2500	25003	(6) 4"	(18) 750KCM	(6) 350KCM	25004	(8) 4"	(32) 500KCM	(8) 350KCM
3000	30003	(7) 4"	(21) 750KCM	(7) 500KCM	30004	(9) 4"	(36) 500KCM	(9) 500KCM
4000	40003	(9) 4"	(27) 750KCM	(9) 500KCM	40004	(12) 4"	(48) 500KCM	(12) 500KCM

NOTES:
1. REFER TO SPECIFICATIONS FOR INSULATION TYPE PER WIRE SIZE.
2. MINIMUM CONDUIT SIZES IDENTIFIED MEET MAXIMUM 40% FILL FOR EMT, RMC AND PVC SCHEDULE 40.
3. FOR FEEDER RATINGS 100AMPS OR LESS, ACTUAL AMPACITY IS CALCULATED BY THOSE GIVEN IN NEC 310.15(B)(16), 60DEG C.
4. FOR FEEDER RATINGS GREATER THAN 100AMPS, ACTUAL AMPACITY IS CALCULATED BY THOSE GIVEN IN NEC 310.15(B)(16), 75DEG C.

NOTES:
1. REFER TO SPECIFICATIONS FOR INSULATION TYPE PER WIRE SIZE.
2. MINIMUM CONDUIT SIZES IDENTIFIED MEET MAXIMUM 40% FILL FOR EMT, RMC AND PVC SCHEDULE 40.
3. ALL NEUTRAL CONDUCTORS ARE CONSIDERED CURRENT CARRYING, THEREFORE AMPACITY ADJUSTMENTS HAVE BEEN INCLUDED IN ACCORDANCE WITH NEC TABLE 310.15(B)(3)(a) TO ACCOMMODATE FOUR (4) CURRENT CARRYING CONDUCTORS IN A SINGLE RACEWAY.
4. ADJUSTED CONDUCTOR AMPACITIES ARE CALCULATED BASED ON THOSE GIVEN FOR 90DEG C CONDUCTORS IN ACCORDANCE WITH NEC 310.15(B) AND TABLE NEC 310.15(B)(16). FOR FEEDER RATINGS 100AMPS OR LESS, THE ADJUSTED AMPACITY SHALL NOT EXCEED THE 60DEG C RATING. FOR FEEDER RATINGS GREATER THAN 100AMPS, ACTUAL AMPACITY SHALL NOT EXCEED THE 75DEG C RATING.

NOTES:
1. PROVIDE A MINIMUM OF 3 BUSSED SPACES (100A) FOR FUTURE CIRCUIT BREAKERS.
2. REFER TO SHEET E111 FOR LOCATION AND ADDITIONAL INFORMATION.

PIVOT ARCHITECTURE

REGISTERED PROFESSIONAL ENGINEER 11612 OREGON JUL 16, 1985 STEPHEN J. TURNA
10-23-14
EXPIRES: 6-30-16

PAE
Portland | San Francisco | Seattle
pae-engineers.com

HOWARD RECONCILED SET
EUGENE SCHOOL DISTRICT
700 HOWARD AVE, EUGENE, OREGON 97404
HOWARD ELEMENTARY SCHOOL

ONE LINE DIAGRAM - ELECTRICAL

PROJECT #	1330
ISSUE DATE:	10/28/2014
DRAWN:	AMT
CHECKED:	SJT
REVISIONS:	

E602

PRINTED ON: 10/23/2014 3:15:45 PM FROM FILE: C:\Revit Local Files\13-1532_HES MEP\4\13-1532_HES MEP14_stacy.hansen.rvt

© 2014 PIVOT ARCHITECTURE

DESIGNATION: MDP		TYPE: Switchboard		PROJECT NAME: EUGENE SD HOWARD ES	
VOLTAGE: 480		BUS RATING: 1200 A		kAIC RATING: 42	AVAILABLE FAULT(A): 17871

FEEDER ID:	TYPE	TRIP RATING (A)	CONNECTED (Amps)	DESIGN (Amps)	NOTES
4K1	Feeder	200	130.5	84.8	
42A1	Feeder	100	9.3	11.7	
42C1	Feeder	100	12.6	15.7	
41A1	Feeder	100	13.1	16.3	
41C1	Feeder	100	12.4	15.5	
41D1	Feeder	150	108.3	113.7	
CHILLER	Feeder	350	272.5	283.4	
T-SDP	Feeder	350	371.9	265.6	
MDP MAIN	Feeder	1200	1204.7	1081.6	
STANDBY ATS	Feeder	90	87.1	83.1	
LIFE SAFETY ATS	Feeder	60	19.5	22.2	
4LA1	Feeder	100	38.8	39.2	
42B1	Feeder	100	26.5	26.9	
4LB1	Feeder	100	24.7	25.3	
4LB2	Feeder	100	24.2	24.8	
ELEVATOR	Feeder	60	40.8	51.0	
4LC1	Feeder	100	24.2	24.8	

DEMAND CATEGORY	Aph (VA)	Bph (VA)	Cph (VA)
Equipment	174996	170431	161693
Motor - Largest	16392	16392	16392
Motor	15213	15213	15213
Lighting	27435	23110	18731
	0	225	0
Receptacles	30037	24097	30557
Kitchen Equip	35671	36435	34341
DESIGN LOAD:	299744	285904	276928

TOTAL CONNECTED LOAD	VA:	961721
	Amps:	1204.7
TOTAL DESIGN LOAD	VA:	862576
	Amps:	1081.6

DESIGNATION: SDP		TYPE: Switchboard		PROJECT NAME: EUGENE SD HOWARD ES	
VOLTAGE: 208		BUS RATING: 800 A		kAIC RATING: 14	AVAILABLE FAULT(A): 6503

FEEDER ID:	TYPE	TRIP RATING (A)	CONNECTED (kVA)	DESIGN (kVA)	NOTES
21A2	Feeder	100	8.8	8.9	
22A1	Feeder	150	37.5	31.4	
22B1	Feeder	150	34.7	28.0	
22C1	Feeder	150	31.8	26.3	
GYMNASIUM	Feeder	100	0.0	0.0	
SDP MAIN	Feeder	800	312.6	225.0	
2K1	Feeder	200	66.2	47.5	
21C1	Feeder	150	32.3	26.4	
21A1	Feeder	150	31.0	26.5	
21B1	Feeder	150	26.4	21.5	
21D1	Feeder	200	43.7	42.0	

DEMAND CATEGORY	Aph (VA)	Bph (VA)	Cph (VA)
Kitchen Equip	12168	12933	10839
Receptacles	25967	25927	28067
Equipment	38614	35017	26885
Lighting	125	1594	1594
	2500	1475	1250
DESIGN LOAD:	79374	76945	68634

TOTAL CONNECTED LOAD	VA:	312558
	Amps:	899.6
TOTAL DESIGN LOAD	VA:	224953
	Amps:	661.0

DESIGNATION: STDP		TYPE: Switchboard		PROJECT NAME: EUGENE SD HOWARD ES	
VOLTAGE: 208		BUS RATING: 225 A		kAIC RATING: 14	AVAILABLE FAULT(A): 3467

FEEDER ID:	TYPE	TRIP RATING (A)	CONNECTED (kVA)	DESIGN (kVA)	NOTES
IDF-2	Feeder	60	3.1	3.1	
MDF	Feeder	100	14.0	14.0	
21SBK1	Feeder	100	21.1	22.4	
21SBA1	Feeder	100	26.1	23.6	
IDF-1	Feeder	60	3.0	3.0	
STDP MAIN	Feeder	225	67.2	64.2	

DEMAND CATEGORY	Aph (VA)	Bph (VA)	Cph (VA)
Receptacles	5446	4906	4007
Equipment	14526	15870	12724
Motor - Largest	2250	2250	2250
DESIGN LOAD:	22222	23026	18980

TOTAL CONNECTED LOAD	VA:	67240
	Amps:	201.1
TOTAL DESIGN LOAD	VA:	64230
	Amps:	191.7

	MDP
	SDP
	STDP

PIVOT ARCHITECTURE

REGISTERED PROFESSIONAL ENGINEER
STEPHEN J. TURNIA
OREGON
JULY 16, 1985
10-23-14
EXPIRES: 6-30-16

PAE
Portland | San Francisco | Seattle
pae-engineers.com

HOWARD RECONCILED SET
EUGENE SCHOOL DISTRICT
700 HOWARD AVE, EUGENE, OREGON 97404
HOWARD ELEMENTARY SCHOOL

PANEL SCHEDULES - ELECTRICAL

PROJECT #	1.536
ISSUE DATE:	10/28/2014
DRAWN:	AMT
CHECKED:	SJT
REVISIONS:	

E603

PRINTED ON: 10/23/2014 3:15:46 PM FROM FILE: C:\Revit Local Files\13-1532_HES MEP14\13-1532_HES MEP14_stacy.hansen.rvt

© 2014 PIVOT ARCHITECTURE

DESIGNATION: PANEL 41A1	PROJECT NAME: EUGENE SD HOWARD ES	LOCATION: 1ST LEVEL - B-WING MDF B120
VOLTAGE: 480Y/277V - 3 Ph - 4 Wire; BUS RATING(A): 100	MAIN(A): 100; SCCR(KA): 42; AVAILABLE FAULT(A): 16989; MOUNTING: Surface; ENCLOSURE: NEMA 1; NOTES:	

NOTES	DESCRIPTION	DEMAND CATEGORY	VA	BKR A/P	CIRCUIT #	PHASE	CIRCUIT #	BKR A/P	VA	DEMAND CATEGORY	DESCRIPTION	NOTES
	LTG-CLASSROOM B125A/B126/B127	Lighting	1518	20/1	1	A	2	20/1	1136	Lighting	LTG RELAY 1NB1	
	LTG-CLASSROOM B131/B129	Lighting	1012	20/1	3	B	4	20/1	0		SPARE	
	LTG-B120-B123/B125C/B125D	Lighting	632	20/1	5	C	6	20/1	0		SPARE	
	LTG-B101-B105/B111-B113	Lighting	969	20/1	7	A	8	20/1	0		SPARE	
	LTG-B106-B108/B109/B110/B114-B117	Lighting	1016	20/1	9	B	10	20/1	0		SPARE	
	SPARE		0	20/1	11	C	12	20/1	0		SPARE	
	SPARE		0	20/1	13	A	14	20/1	0		SPARE	
	SPARE		0	20/1	15	B	16	20/1	0		SPARE	
	SPARE		0	20/1	17	C	18	20/1	0		SPARE	
	SPARE		0	20/1	19	A	20	20/1	0		SPARE	
	SPARE		0	20/1	21	B	22	20/1	0		SPARE	
	SPARE		0	20/1	23	C	24	20/1	0		SPARE	
	SPARE		0	20/1	25	A	26	20/1	0		SPARE	
	SPARE		0	20/1	27	B	28	20/1	0		SPARE	
	SPARE		0	20/1	29	C	30	20/1	0		SPARE	
	SPARE		0	20/1	31	A	32	20/1	0		SPARE	
	SPARE		0	20/1	33	B	34	20/1	0		SPARE	
	SPARE		0	20/1	35	C	36	20/1	0		SPARE	
	SPARE		0	20/1	37	A	38	20/1	0		SPARE	
	SPARE		0	20/1	39	B	40	20/1	0		SPARE	
	SPARE		0	20/1	41	C	42	20/1	0		SPARE	

DEMAND CATEGORY	Aph(VA)	Bph(VA)	Cph(VA)	TOTAL
Lighting	4529	2535	790	7854
DESIGN LOAD:	4529	2535	790	7854

TOTAL CONNECTED LOAD	VA:	6283
	AMPS:	13.1
TOTAL DESIGN LOAD	VA:	7854
	AMPS:	16.3

DESIGNATION: PANEL 41C1	PROJECT NAME: EUGENE SD HOWARD ES	LOCATION: 1ST LEVEL - C-WING IDF C101
VOLTAGE: 480Y/277V - 3 Ph - 4 Wire; BUS RATING(A): 100	MAIN(A): 100; SCCR(KA): 42; AVAILABLE FAULT(A): 16989; MOUNTING: Surface; ENCLOSURE: NEMA 1; NOTES:	

NOTES	DESCRIPTION	DEMAND CATEGORY	VA	BKR A/P	CIRCUIT #	PHASE	CIRCUIT #	BKR A/P	VA	DEMAND CATEGORY	DESCRIPTION	NOTES
	LTG-CLASSROOM C107/C109	Lighting	1012	20/1	1	A	2	20/1	634	Lighting	LTG RELAY 1NB2	
	LTG-CLASSROOM C111-C113	Lighting	1518	20/1	3	B	4	20/1	904	Lighting	LTG RELAY 1NB2	
	LTG-C101-C105/B134	Lighting	484	20/1	5	C	6	20/1	634	Lighting	LTG RELAY 1NC1	
	LTG-B136/B138-B140/B117/B131	Lighting	500	20/1	7	A	8	20/1	0		SPARE	
	LTG-CLASSROOM B144/B146	Lighting	1012	20/1	9	B	10	20/1	0		SPARE	
	LTG-CLASSROOM B148-B150	Lighting	1518	20/1	11	C	12	20/1	0		SPARE	
	SPARE		0	20/1	13	A	14	20/1	0		SPARE	
	SPARE		0	20/1	15	B	16	20/1	0		SPARE	
	SPARE		0	20/1	17	C	18	20/1	0		SPARE	
	SPARE		0	20/1	19	A	20	20/1	0		SPARE	
	SPARE		0	20/1	21	B	22	20/1	0		SPARE	
	SPARE		0	20/1	23	C	24	20/1	0		SPARE	
	SPARE		0	20/1	25	A	26	20/1	0		SPARE	
	SPARE		0	20/1	27	B	28	20/1	0		SPARE	
	SPARE		0	20/1	29	C	30	20/1	0		SPARE	
	SPARE		0	20/1	31	A	32	20/1	0		SPARE	
	SPARE		0	20/1	33	B	34	20/1	0		SPARE	
	SPARE		0	20/1	35	C	36	20/1	0		SPARE	
	SPARE		0	20/1	37	A	38	20/1	0		SPARE	
	SPARE		0	20/1	39	B	40	20/1	0		SPARE	
	SPARE		0	20/1	41	C	42	20/1	0		SPARE	

DEMAND CATEGORY	Aph(VA)	Bph(VA)	Cph(VA)	TOTAL
Lighting	2682	4293	3295	10270
DESIGN LOAD:	2682	4293	3295	10270

TOTAL CONNECTED LOAD	VA:	8218
	AMPS:	12.4
TOTAL DESIGN LOAD	VA:	10270
	AMPS:	15.5

DESIGNATION: PANEL 41D1	PROJECT NAME: EUGENE SD HOWARD ES	LOCATION: 1ST LEVEL - A-WING ELEC RM A118
VOLTAGE: 480Y/277V - 3 Ph - 4 Wire; BUS RATING(A): 150	MAIN(A): 150; SCCR(KA): 42; AVAILABLE FAULT(A): 16188; MOUNTING: Surface; ENCLOSURE: NEMA 1; NOTES:	

NOTES	DESCRIPTION	DEMAND CATEGORY	VA	BKR A/P	CIRCUIT #	PHASE	CIRCUIT #	BKR A/P	VA	DEMAND CATEGORY	DESCRIPTION	NOTES
	LTG-A117/A116/A115/A114	Lighting	1198	20/1	1	A	2	20/1	1480	Lighting	LTG RELAY 5NA1	
	LTG-A118/A119/A105-A110/A112	Lighting	1050	20/1	3	B	4	20/1	1000	Lighting	LTG RELAY 5NA1	
	LTG-A104CA/104DA102	Lighting	352	20/1	5	C	6	20/1	524	Lighting	LTG RELAY 5NA2	
	SWOP-101	Equipment	3900	20/3	7	A	8	20/1	1274	Lighting	LTG RELAY 1NA1	
			3900		9	B	10	20/1	1000	Lighting	LTG RELAY 1NA2	
			3900		11	C	12	20/1	2444	Lighting	LTG RELAY 1NA2	
	SPARE		0	20/1	13	A	14	15/3	1333	Equipment	TRASH COMPACTOR	
	SPARE		0	20/1	15	B	16		1333			
	SPARE		0	20/1	17	C	18		1333			
	WELL PUMP	Equipment	3900	20/3	19	A	20	20/1	1974	Lighting	LTG RELAY 1NA2	
			3900		21	B	22	20/1	524	Lighting	LTG RELAY 1NA3	
			3900		23	C	24	20/1	0		SPARE	
	RWTS-101	Equipment	3712	20/3	25	A	26	20/3	943	Equipment	COURTYARD GATE OPERATOR	
			3712		27	B	28		943			
			3712		29	C	30		943			
	HCP-1	Equipment	3048	20/3	31	A	32	20/3	2106	Equipment	RWRS-101	
			3048		33	B	34		2106			
			3048		35	C	36		2106			
	HCP-2	Equipment	3048	20/3	37	A	38	20/3	2106	Equipment	RWRS-101	
			3048		39	B	40		2106			
			3048		41	C	42		2106			
	SPACE				43	A	44				SPACE	
	SPACE				45	B	46				SPACE	
	SPACE				47	C	48				SPACE	
	SPACE				49	A	50				SPACE	
	SPACE				51	B	52				SPACE	
	SPACE				53	C	54				SPACE	

DEMAND CATEGORY	Aph(VA)	Bph(VA)	Cph(VA)	TOTAL
Lighting	7408	4467	4150	16025
Equipment	24096	24096	24096	72288
DESIGN LOAD:	31503	28563	28246	88313

TOTAL CONNECTED LOAD	VA:	85108
	AMPS:	108.3
TOTAL DESIGN LOAD	VA:	88313
	AMPS:	113.7

DESIGNATION: PANEL 42A1	PROJECT NAME: EUGENE SD HOWARD ES	LOCATION: 2ND LEVEL - B-WING HALLWAY B224
VOLTAGE: 480Y/277V - 3 Ph - 4 Wire; BUS RATING(A): 100	MAIN(A): 100; SCCR(KA): 14; AVAILABLE FAULT(A): 6367; MOUNTING: Flush; ENCLOSURE: NEMA 1; NOTES:	

NOTES	DESCRIPTION	DEMAND CATEGORY	VA	BKR A/P	CIRCUIT #	PHASE	CIRCUIT #	BKR A/P	VA	DEMAND CATEGORY	DESCRIPTION	NOTES
	LTG-CLASSROOM B225-B227	Lighting	1518	20/1	1	A	2	20/1	634	Lighting	LTG RELAY 2NB1	
	LTG-CLASSROOM B229/B231	Lighting	1012	20/1	3	B	4	20/1	812	Lighting	LTG RELAY 2NB1	
	LTG-B216/B218/B220-B223	Lighting	860	20/1	5	C	6	20/1	1724	Lighting	LTG RELAY 2NB1	
	SPARE		0	20/1	7	A	8	20/1	0		SPARE	
	SPARE		0	20/1	9	B	10	20/1	0		SPARE	
	SPARE		0	20/1	11	C	12	20/1	0		SPARE	
	SPARE		0	20/1	13	A	14	20/1	0		SPARE	
	SPARE		0	20/1	15	B	16	20/1	0		SPARE	
	SPARE		0	20/1	17	C	18	20/1	0		SPARE	
	SPARE		0	20/1	19	A	20	20/1	0		SPARE	
	SPARE		0	20/1	21	B	22	20/1	0		SPARE	
	SPARE		0	20/1	23	C	24	20/1	0		SPARE	
	SPARE		0	20/1	25	A	26	20/1	0		SPARE	
	SPARE		0	20/1	27	B	28	20/1	0		SPARE	
	SPARE		0	20/1	29	C	30	20/1	0		SPARE	
	SPARE		0	20/1	31	A	32	20/1	0		SPARE	
	SPARE		0	20/1	33	B	34	20/1	0		SPARE	
	SPARE		0	20/1	35	C	36	20/1	0		SPARE	
	SPARE		0	20/1	37	A	38	20/1	0		SPARE	
	SPARE		0	20/1	39	B	40	20/1	0		SPARE	
	SPARE		0	20/1	41	C	42	20/1	0		SPARE	

DEMAND CATEGORY	Aph(VA)	Bph(VA)	Cph(VA)	TOTAL
Lighting	2690	2280	3230	8200
DESIGN LOAD:	2690	2280	3230	8200

TOTAL CONNECTED LOAD	VA:	6560
	AMPS:	9.3
TOTAL DESIGN LOAD	VA:	8200
	AMPS:	11.7

DESIGNATION: PANEL 4LA1	PROJECT NAME: EUGENE SD HOWARD ES	LOCATION:
VOLTAGE: 480Y/277V - 3 Ph - 4 Wire; BUS RATING(A): 100	MAIN(A): 100; SCCR(KA): 14; AVAILABLE FAULT(A): 8752; MOUNTING: Surface; ENCLOSURE: NEMA 1; NOTES:	

NOTES	DESCRIPTION	DEMAND CATEGORY	VA	BKR A/P	CIRCUIT #	PHASE	CIRCUIT #	BKR A/P	VA	DEMAND CATEGORY	DESCRIPTION	NOTES
	AH - KITCH/BLDG/STAGE	Equipment	2107	20/3	1	A	2	20/1	512	Lighting	LTG - MECH LOFT A200	
			2107		3	B	4	20/1			SPARE	
			2107		5	C	6	20/1			SPARE	
	AH - GYM	Equipment	5820	30/3	7	A	8	20/1			SPARE	
			5820		9	B	10	20/1			SPARE	
			5820		11	C	12					
	AH-CAFE	Equipment	2300	20/3	13	A	14					
			2300		15	B	16					
			2300		17	C	18					
					19	A	20					
					21	B	22					
					23	C	24					
					25	A	26					
					27	B	28					
					29	C	30					
					31	A	32					
					33	B	34					
					35	C	36					
					37	A	38					
					39	B	40					
					41	C	42					

DEMAND CATEGORY	Aph(VA)	Bph(VA)	Cph(VA)	TOTAL
Equipment	10227	10227	10227	30681
Lighting	640	0	0	640
DESIGN LOAD:	10867	10227	10227	31321

TOTAL CONNECTED LOAD	VA:	31193
	AMPS:	38.8
TOTAL DESIGN LOAD	VA:	31321
	AMPS:	39.2

DESIGNATION: PANEL 4LB1	PROJECT NAME: EUGENE SD HOWARD ES	LOCATION: MECH LOFT B300
VOLTAGE: 480Y/277V - 3 Ph - 4 Wire; BUS RATING(A): 100	MAIN(A): 100; SCCR(KA): 14; AVAILABLE FAULT(A): 7876; MOUNTING: Surface; ENCLOSURE: NEMA 1; NOTES:	

NOTES	DESCRIPTION	DEMAND CATEGORY	VA	BKR A/P	CIRCUIT #	PHASE	CIRCUIT #	BKR A/P	VA	DEMAND CATEGORY	DESCRIPTION	NOTES
	AH-B125/B126/B127	Equipment	1414	20/3	1	A	2	20/1	608	Lighting	LTG - MECH LOFT B300	
			1414		3	B	4	20/1	0		SPARE	
			1414		5	C	6	20/1	0		SPARE	
	AH-B129/B130/B131	Equipment	1414	20/3	7	A	8	20/1	0		SPARE	
			1414		9	B	10	20/1	0		SPARE	
			1414		11	C	12	20/1	0		SPARE	
	AH-B225/B226/B227	Equipment	1414	20/3	13	A	14	20/1	0		SPARE	
			1414		15	B	16	20/1	0		SPARE	
			1414		17	C	18	20/1	0		SPARE	
	AH-B229/B230/B231	Equipment	1414	20/3	19	A	20	20/1	0		SPARE	
			1414		21	B	22	20/1	0		SPARE	
			1414		23	C	24	20/1	0		SPARE	
	EF-B300	Equipment	584	20/3	25	A	26	20/1	0		SPARE	
			584		27	B	28	20/1	0		SPARE	
			584		29	C	30	20/1	0		SPARE	
	SPARE		0	20/1	31	A	32	20/1	0		SPARE	
	SPARE		0	20/1	33	B	34	20/1	0		SPARE	
	SPARE		0	20/1	35	C	36	20/1	0		SPARE	
	SPARE		0	20/1	37	A	38	20/1	0		SPARE	
	SPARE		0	20/1	39	B	40	20/1	0		SPARE	
	SPARE		0	20/1	41	C	42	20/1	0		SPARE	

DEMAND CATEGORY	Aph(VA)	Bph(VA)	Cph(VA)	TOTAL
Equipment	6240	6240	6240	18720
Lighting	760	0	0	760
DESIGN LOAD:	7000	6240	6240	19480

TOTAL CONNECTED LOAD	VA:	19328
	AMPS:	24.7
TOTAL DESIGN LOAD	VA:	19480
	AMPS:	25.3

DESIGNATION: PANEL 4LB2	PROJECT NAME: EUGENE SD HOWARD ES	LOCATION: MECH LOFT B301
VOLTAGE: 480Y/277V - 3 Ph - 4 Wire; BUS RATING(A): 100	MAIN(A): 100; SCCR(KA): 14; AVAILABLE FAULT(A): 9718; MOUNTING: Surface; ENCLOSURE: NEMA 1; NOTES:	

NOTES	DESCRIPTION	DEMAND CATEGORY	VA	BKR A/P	CIRCUIT #	PHASE	CIRCUIT #	BKR A/P	VA	DEMAND CATEGORY	DESCRIPTION	NOTES
	AH-B144/B145/B146	Equipment	1414	20/3	1	A	2	20/1	608	Lighting	LTG - MECH LOFT B301	
			1414		3	B	4	20/1	0		SPARE	
			1414		5	C	6	20/1	0		SPARE	
	AH-B148/B149/B150	Equipment	1414	20/3	7	A	8	20/1	0		SPARE	
			1414		9	B	10	20/1	0		SPARE	
			1414		11	C	12	20/1	0		SPARE	
	AH-B244/B245/B246	Equipment	1414	20/3	13	A	14	20/1	0		SPARE	
			1414		15	B	16	20/1	0		SPARE	
			1414		17	C	18	20/1	0		SPARE	
	AH-B248/B249/B250	Equipment	1414	20/3	19	A	20	20/1	0		SPARE	
			1414		21	B	22	20/1	0		SPARE	
			1414		23	C	24	20/1	0		SPARE	
	EF-B301	Equipment	444	20/3	25	A	26	20/1	0		SPARE	
			444		27	B	28	20/1	0		SPARE	
			444		29	C	30	20/1	0		SPARE	
	SPARE		0	20/1	31	A	32	20/1	0		SPARE	
	SPARE		0	20/1	33	B	34	20/1	0		SPARE	
	SPARE		0	20/1	35	C	36	20/1	0		SPARE	
	SPARE		0	20/1	37	A	38	20/1	0		SPARE	
	SPARE		0	20/1	39	B	40	20/1	0		SPARE	
	SPARE		0	20/1	41	C	42	20/1	0		SPARE	

DEMAND CATEGORY	Aph(VA)	Bph(VA)	Cph(VA)	TOTAL
Equipment	6100	6100	6100	18300
Lighting	760	0	0	760
DESIGN LOAD:	6860	6100	6100	19060

TOTAL CONNECTED LOAD	VA:	18908
	AMPS:	24.2
TOTAL DESIGN LOAD	VA:	19060
	AMPS:	24.8

DESIGNATION: PANEL 4LC1	PROJECT NAME: EUGENE SD HOWARD ES	LOCATION: MECH PLATFORM C300
VOLTAGE: 480Y/277V - 3 Ph - 4 Wire; BUS RATING(A): 100	MAIN(A): 100; SCCR(KA): 42; AVAILABLE FAULT(A): 16350; MOUNTING: Surface; ENCLOSURE: NEMA 1; NOTES:	

NOTES	DESCRIPTION	DEMAND CATEGORY	VA	BKR A/P	CIRCUIT #	PHASE	CIRCUIT #	BKR A/P	VA	DEMAND CATEGORY	DESCRIPTION	NOTES
	AH-C107/C108/C109	Equipment	1414	20/3	1	A	2	20/1	608	Lighting	LTG - MECH LOFT C300	
			1414		3	B	4	20/1	0		SPARE	
			1414		5	C	6	20/1	0		SPARE	
	AH-C111/C112/C113	Equipment	1414	20/3	7	A	8	20/1	0		SPARE	
			1414		9	B	10	20/1	0		SPARE	
			1414		11	C	12	20/1	0		SPARE	
	AH-C207/C208/C209	Equipment	1414	20/3	13	A	14	20/1	0		SPARE	
			1414		15	B	16	20/1	0		SPARE	
			1414		17	C	18	20/1	0		SPARE	
	AH-C211/C212/C213	Equipment	1414	20/3	19	A	20	20/1	0		SPARE	
			1414		21	B	22	20/1	0		SPARE	
			1414		23	C	24	20/1	0		SPARE	
	EF-C300	Equipment	444	20/3	25	A	26	20/1	0		SPARE	
			444		27	B	28	20/1	0		SPARE	
			444		29	C	30	20/1	0		SPARE	
	SPARE		0	20/1	31	A	32	20/1	0		SPARE	
	SPARE		0	20/1	33	B	34	20/1	0		SPARE	
	SPARE		0	20/1	35	C	36	20/1	0		SPARE	
	SPARE		0	20/1	37	A	38	20/1	0		SPARE	
	SPARE		0	20/1	39	B	40	20/1	0		SPARE	
	SPARE		0	20/1	41	C	42	20/1	0		SPARE	

DEMAND CATEGORY	Aph(VA)	Bph(VA)	Cph(VA)	TOTAL
Equipment	6100	6100	6100	18300
Lighting	760	0	0	760
DESIGN LOAD:	6860	6100	6100	19060

TOTAL CONNECTED LOAD	VA:	18908
	AMPS:	24.2
TOTAL DESIGN LOAD	VA:	19060
	AMPS:	24.8

41A1	4LA1
41C1	4LB1
41D1	4LB2
42A1	4LC1

PIVOT ARCHITECTURE

REGISTERED PROFESSIONAL ENGINEER — OREGON — JAN 16, 1987 — STEPHEN J. TURNA — EXPIRES: 6-30-16 — 10-23-14

PAE Portland | San Francisco | Seattle pae-engineers.com

HOWARD RECONCILED SET

EUGENE SCHOOL DISTRICT
700 HOWARD AVE, EUGENE, OREGON 97404

HOWARD ELEMENTARY SCHOOL

PANEL SCHEDULES - ELECTRICAL

PROJECT #:	1306
ISSUE DATE:	10/28/2014
DRAWN:	AMT
CHECKED:	SJT
REVISIONS:	

E604

PRINTED ON: 10/23/2014 3:15:48 PM FROM FILE: C:\Revit Local Files\13-1532_HES MEP14\13-1532_HES MEP14_stacy.hansen.rvt

© 2014 PIVOT ARCHITECTURE

DESIGNATION: PANEL 42LSC1		PROJECT NAME: EUGENE SD HOWARD ES					LOCATION: 2ND LEVEL - C-WING HALLWAY C206
VOLTAGE: 480Y/277V - 3 Ph - 4 Wire	BUS RATING(A): 60	MAIN(A): 60	SCCR(KA): 14	AVAILABLE FAULT(A): 11918	MOUNTING: Flush	ENCLOSURE: NEMA 1	NOTES:

NOTES	DESCRIPTION	DEMAND CATEGORY	VA	BKR A/P	CIRCUIT #	PHASE	CIRCUIT #	BKR A/P	VA	DEMAND CATEGORY	DESCRIPTION	NOTES
	LTG RELAY 1EC1	Lighting	782	20/1	1	A	2	20/1	144	Lighting	EMER LTG - B141/B142/C101/C104/C105	
	LTG RELAY 2EC1	Lighting	620	20/1	3	B	4	20/1	144	Lighting	EMER LTG - B235/B241/B243/C204/C205	
	SPARE			20/1	5	C	6	20/1	128	Lighting	EMER LTG - MECH LOFT - B301	
	SPARE		0	20/1	7	A	8	20/1	96	Lighting	EMER LTG - MECH LOFT - C300	
	SPARE		0	20/1	9	B	10	20/1	0		SPARE	
	SPARE		0	20/1	11	C	12	20/1	0		SPARE	
	SPARE		0	20/1	13	A	14	20/1	0		SPARE	
	SPARE		0	20/1	15	B	16	20/1	0		SPARE	
	SPARE		0	20/1	17	C	18	20/1	0		SPARE	

DEMAND CATEGORY	Aph(VA)	Bph(VA)	Cph(VA)	TOTAL
Lighting	1277	955	160	2392
DESIGN LOAD:	1277	955	160	2392

TOTAL CONNECTED LOAD	VA:	1914
	AMPS:	3.7
TOTAL DESIGN LOAD	VA:	2393
	AMPS:	4.6

DESIGNATION: PANEL 42B1		PROJECT NAME: EUGENE SD HOWARD ES					LOCATION: MECH PLATFORM A201
VOLTAGE: 480Y/277V - 3 Ph - 4 Wire	BUS RATING(A): 100	MAIN(A): 100	SCCR(KA): 14	AVAILABLE FAULT(A): 12510	MOUNTING: Surface	ENCLOSURE: NEMA 1	NOTES:

NOTES	DESCRIPTION	DEMAND CATEGORY	VA	BKR A/P	CIRCUIT #	PHASE	CIRCUIT #	BKR A/P	VA	DEMAND CATEGORY	DESCRIPTION	NOTES
	AH-ADMIN/A102	Equipment	1635	20/3	1	A	2	20/1	512	Lighting	LTG - MECH LOFT A201	
			1635		3	B	4	20/1	0		SPARE	
			1635		5	C	6	20/1	0		SPARE	
	AH-MEDIA	Equipment	3880	20/3	7	A	8	20/1	0		SPARE	
			3880		9	B	10	20/1	0		SPARE	
			3880		11	C	12	20/1	0		SPARE	
	AH-202	Equipment	471	20/3	13	A	14	20/1	0		SPARE	
			471		15	B	16	20/1	0		SPARE	
			471		17	C	18	20/1	0		SPARE	
	EF - ADMIN	Equipment	834	20/3	19	A	20	20/1	0		SPARE	
			834		21	B	22	20/1	0		SPARE	
			834		23	C	24	20/1	0		SPARE	
	SPARE		0	20/1	25	A	26	20/1	0		SPARE	
	SPARE		0	20/1	27	B	28	20/1	0		SPARE	
	SPARE		0	20/1	29	C	30	20/1	0		SPARE	
	SPARE		0	20/1	31	A	32	20/1	0		SPARE	
	SPARE		0	20/1	33	B	34	20/1	0		SPARE	
	SPARE		0	20/1	35	C	36	20/1	0		SPARE	
	SPARE		0	20/1	37	A	38	20/1	0		SPARE	
	SPARE		0	20/1	39	B	40	20/1	0		SPARE	
	SPARE		0	20/1	41	C	42	20/1	0		SPARE	

DEMAND CATEGORY	Aph(VA)	Bph(VA)	Cph(VA)	TOTAL
Equipment	6820	6820	6820	20460
Lighting	640	0	0	640
DESIGN LOAD:	7460	6820	6820	21100

TOTAL CONNECTED LOAD	VA:	20972
	AMPS:	26.5
TOTAL DESIGN LOAD	VA:	21100
	AMPS:	26.9

DESIGNATION: PANEL 4K1		PROJECT NAME: EUGENE SD HOWARD ES					LOCATION:
VOLTAGE: 480Y/277V - 3 Ph - 4 Wire	BUS RATING(A): 200	MAIN(A): 200	SCCR(KA): 42	AVAILABLE FAULT(A): 17298	MOUNTING: Surface	ENCLOSURE: NEMA 1	NOTES:

NOTES	DESCRIPTION	DEMAND CATEGORY	VA	BKR A/P	CIRCUIT #	PHASE	CIRCUIT #	BKR A/P	VA	DEMAND CATEGORY	DESCRIPTION	NOTES
	E31	Kitchen Equip	2820	20/3	1	A	2	20/1	0		SPARE	
			2820		3	B	4	20/1	0		SPARE	
			2820		5	C	6	20/1	0		SPARE	
	E32	Kitchen Equip	33338	50/3	7	A	8	20/1	0		SPARE	
			33338		9	B	10	20/1	0		SPARE	
			33338		11	C	12	20/1	0		SPARE	
	SPARE		0	20/1	13	A	14	20/1	0		SPARE	
	SPARE		0	20/1	15	B	16	20/1	0		SPARE	
	SPARE		0	20/1	17	C	18	20/1	0		SPARE	
	SPARE		0	20/1	19	A	20	20/1	0		SPARE	
	SPARE		0	20/1	21	B	22	20/1	0		SPARE	
	SPARE		0	20/1	23	C	24	20/1	0		SPARE	
	SPARE		0	20/1	25	A	26	20/1	0		SPARE	
	SPARE		0	20/1	27	B	28	20/1	0		SPARE	
	SPARE		0	20/1	29	C	30	20/1	0		SPARE	
	SPARE		0	20/1	31	A	32	20/1	0		SPARE	
	SPARE		0	20/1	33	B	34	20/1	0		SPARE	
	SPARE		0	20/1	35	C	36	20/1	0		SPARE	
	SPARE		0	20/1	37	A	38	20/1	0		SPARE	
	SPARE		0	20/1	39	B	40	20/1	0		SPARE	
	SPARE		0	20/1	41	C	42	20/1	0		SPARE	

DEMAND CATEGORY	Aph(VA)	Bph(VA)	Cph(VA)	TOTAL
Kitchen Equip	23503	23503	23503	70508
DESIGN LOAD:	23503	23503	23503	70508

TOTAL CONNECTED LOAD	VA:	108474
	AMPS:	130.5
TOTAL DESIGN LOAD	VA:	70508
	AMPS:	84.8

DESIGNATION: PANEL 42C1		PROJECT NAME: EUGENE SD HOWARD ES					LOCATION: 2ND LEVEL - C-WING HALLWAY C206
VOLTAGE: 480Y/277V - 3 Ph - 4 Wire	BUS RATING(A): 100	MAIN(A): 100	SCCR(KA): 14	AVAILABLE FAULT(A): 6244	MOUNTING: Flush	ENCLOSURE: NEMA 1	NOTES:

NOTES	DESCRIPTION	DEMAND CATEGORY	VA	BKR A/P	CIRCUIT #	PHASE	CIRCUIT #	BKR A/P	VA	DEMAND CATEGORY	DESCRIPTION	NOTES
	LTG-CLASSROOM C207/C209	Lighting	1012	20/1	1	A	2	20/1	634	Lighting	LTG RELAY 2NB2	
	LTG-CLASSROOM C211-C213	Lighting	1518	20/1	3	B	4	20/1	954	Lighting	LTG RELAY 2NB2	
	LTG-C201-C205/B234	Lighting	590	20/1	5	C	6	20/1	814	Lighting	LTG RELAY 2NC1	
	LTG-B236/B235-B242	Lighting	590	20/1	7	A	8	20/1	0		SPARE	
	LTG-CLASSROOM B244/B246	Lighting	1012	20/1	9	B	10	20/1	0		SPARE	
	LTG-CLASSROOM B248-250	Lighting	1518	20/1	11	C	12	20/1	0		SPARE	
	SPARE		0	20/1	13	A	14	20/1	0		SPARE	
	SPARE		0	20/1	15	B	16	20/1	0		SPARE	
	SPARE		0	20/1	17	C	18	20/1	0		SPARE	
	SPARE		0	20/1	19	A	20	20/1	0		SPARE	
	SPARE		0	20/1	21	B	22	20/1	0		SPARE	
	SPARE		0	20/1	23	C	24	20/1	0		SPARE	
	SPARE		0	20/1	25	A	26	20/1	0		SPARE	
	SPARE		0	20/1	27	B	28	20/1	0		SPARE	
	SPARE		0	20/1	29	C	30	20/1	0		SPARE	
	SPARE		0	20/1	31	A	32	20/1	0		SPARE	
	SPARE		0	20/1	33	B	34	20/1	0		SPARE	
	SPARE		0	20/1	35	C	36	20/1	0		SPARE	
	SPARE		0	20/1	37	A	38	20/1	0		SPARE	
	SPARE		0	20/1	39	B	40	20/1	0		SPARE	
	SPARE		0	20/1	41	C	42	20/1	0		SPARE	

DEMAND CATEGORY	Aph(VA)	Bph(VA)	Cph(VA)	TOTAL
Lighting	2795	4355	3652	10803
DESIGN LOAD:	2795	4355	3652	10803

TOTAL CONNECTED LOAD	VA:	8642
	AMPS:	12.6
TOTAL DESIGN LOAD	VA:	10803
	AMPS:	15.7

DESIGNATION: PANEL 21LSD1		PROJECT NAME: EUGENE SD HOWARD ES					LOCATION:
VOLTAGE: 208Y/120V - 3 Ph - 4 Wire	BUS RATING(A): 60	MAIN(A): 60	SCCR(KA): 14	AVAILABLE FAULT(A): 749	MOUNTING: Surface	ENCLOSURE: NEMA 1	NOTES:

NOTES	DESCRIPTION	DEMAND CATEGORY	VA	BKR A/P	CIRCUIT #	PHASE	CIRCUIT #	BKR A/P	VA	DEMAND CATEGORY	DESCRIPTION	NOTES
	FIRE ALARM	Equipment	500	20/1	1	A	2	30/1	2000	Equipment	IDF - 30A RECEPTACLE	
	IDF - RECEPTACLE	Receptacles	1500	20/1	3	B	4	20/1	180	Receptacles	FIRE ALARM BELL	
	SPARE			20/1	5	C	6	20/1			SPARE	
	SPARE			20/1	7	A	8	20/1			SPARE	
	SPARE			20/1	9	B	10	20/1				
	SPARE			20/1	11	C	12	20/1				
	SPARE			20/1	13	A	14	20/1				
	SPARE			20/1	15	B	16	20/1				
	SPARE			20/1	17	C	18					

DEMAND CATEGORY	Aph(VA)	Bph(VA)	Cph(VA)	TOTAL
Equipment	2500	0	0	2500
Receptacles	0	1680	0	1680
DESIGN LOAD:	2500	1680	0	4180

TOTAL CONNECTED LOAD	VA:	4180
	AMPS:	20.8
TOTAL DESIGN LOAD	VA:	4180
	AMPS:	20.8

DESIGNATION: PANEL 41LSD1		PROJECT NAME: EUGENE SD HOWARD ES					LOCATION: 1ST LEVEL - A-WING ELECTRICAL RM
VOLTAGE: 480Y/277V - 3 Ph - 4 Wire	BUS RATING(A): 60	MAIN(A): 60	SCCR(KA): 14	AVAILABLE FAULT(A): 12794	MOUNTING: Surface	ENCLOSURE: NEMA 1	NOTES:

NOTES	DESCRIPTION	DEMAND CATEGORY	VA	BKR A/P	CIRCUIT #	PHASE	CIRCUIT #	BKR A/P	VA	DEMAND CATEGORY	DESCRIPTION	NOTES
	LTG RELAY 1EA1	Lighting	627	20/1	1	A	2	20/1	288	Lighting	EMER LTG - A116/A119	
	LTG RELAY 1EA2	Lighting	1550	20/1	3	B	4	20/1	93	Lighting	EMER LTG - A106/A109/A110	
	SPARE		0	20/1	5	C	6	20/1	160	Lighting	EMER LTG - MECH LOFT A200	
	SPARE		0	20/1	7	A	8	20/1	0		SPARE	
	SPARE		0	20/1	9	B	10	20/1	0		SPARE	
	SPARE		0	20/1	11	C	12	20/1	0		SPARE	
	SPARE		0	20/1	13	A	14	20/1	0		SPARE	
	SPARE		0	20/1	15	B	16	20/1	0		SPARE	
	SPARE		0	20/1	17	C	18	20/1	0		SPARE	
	SPARE		0	20/1	19	A	20	20/1	0		SPARE	
	SPARE		0	20/1	21	B	22	20/1	0		SPARE	
	SPARE		0	20/1	23	C	24	20/1	0		SPARE	
	SPARE		0	20/1	25	A	26	20/1	0		SPARE	
	SPARE		0	20/1	27	B	28	20/1	0		SPARE	
	SPARE		0	20/1	29	C	30	20/1	0		SPARE	
	SPARE		0	20/1	31	A	32	60/3	0		42LCS1	
	SPARE		0	20/1	33	B	34					
	SPARE		0	20/1	35	C	36					
	42LSA1		0	60/3	37	A	38	25/3	0		T-21LSD1	
					39	B	40					
					41	C	42					

DEMAND CATEGORY	Aph(VA)	Bph(VA)	Cph(VA)	TOTAL
Lighting	3646	3586	2020	9252
Equipment	2500	0	0	2500
Receptacles	0	1680	0	1680
DESIGN LOAD:	6146	5266	2020	13432

TOTAL CONNECTED LOAD	VA:	11582
	AMPS:	19.5
TOTAL DESIGN LOAD	VA:	13432
	AMPS:	22.2

DESIGNATION: PANEL 21SBK1		PROJECT NAME: EUGENE SD HOWARD ES					LOCATION:
VOLTAGE: 208Y/120V - 3 Ph - 4 Wire	BUS RATING(A): 100	MAIN(A): 100	SCCR(KA): 14	AVAILABLE FAULT(A): 2497	MOUNTING: Surface	ENCLOSURE: NEMA 1	NOTES:

NOTES	DESCRIPTION	DEMAND CATEGORY	VA	BKR A/P	CIRCUIT #	PHASE	CIRCUIT #	BKR A/P	VA	DEMAND CATEGORY	DESCRIPTION	NOTES
	E2	Equipment	1560	20/2	1	A	2	20/3	1800	Equipment	E7.1	
			1560		3	B	4		1800			
	E3	Motor - Largest	1800	20/3	5	C	6		1800			
			1800		7	A	8	20/2	810	Equipment	E7.2	
			1800		9	B	10		810			
	E4.1	Equipment	1560	20/2	11	C	12	20/1	500	Equipment	E8	
			1560		13	A	14	20/2	500	Equipment	HEAT TRACE	
	E4.2/E5/E6	Equipment	900	20/1	15	B	16		500			
					17	C	18				GFI HEAT TRACE	
					19	A	20					
					21	B	22					
					23	C	24					
					25	A	26					
					27	B	28					
					29	C	30					
					31	A	32					
					33	B	34					
					35	C	36					
					37	A	38					
					39	B	40					
					41	C	42					

DEMAND CATEGORY	Aph(VA)	Bph(VA)	Cph(VA)	TOTAL
Equipment	6230	5570	3860	15660
Motor - Largest	2250	2250	2250	6750
DESIGN LOAD:	8480	7820	6110	22410

TOTAL CONNECTED LOAD	VA:	21060
	AMPS:	66.9
TOTAL DESIGN LOAD	VA:	22410
	AMPS:	70.6

DESIGNATION: PANEL 42LSA1		PROJECT NAME: EUGENE SD HOWARD ES					LOCATION: 2ND LEVEL - B-WING HALLWAY B224
VOLTAGE: 480Y/277V - 3 Ph - 4 Wire	BUS RATING(A): 60	MAIN(A): 60	SCCR(KA): 14	AVAILABLE FAULT(A): 4727	MOUNTING: Flush	ENCLOSURE: NEMA 1	NOTES:

NOTES	DESCRIPTION	DEMAND CATEGORY	VA	BKR A/P	CIRCUIT #	PHASE	CIRCUIT #	BKR A/P	VA	DEMAND CATEGORY	DESCRIPTION	NOTES
	LTG RELAY 1EB1	Lighting	740	20/1	1	A	2	20/1	144	Lighting	EMER LTG - B122/B123/B113/B114/B120	
	LTG RELAY 2EB1	Lighting	406	20/1	3	B	4	20/1	56	Lighting	EMER LTG - B222/B223	
	LTG RELAY 2EB1	Lighting	1200	20/1	5	C	6	20/1	128	Lighting	EMER LTG - MECH LOFT B300	
	SPARE		0	20/1	7	A	8	20/1	96	Lighting	EMER LTG - MECH LOFT A201	
	SPARE		0	20/1	9	B	10	20/1	0		SPARE	
	SPARE		0	20/1	11	C	12	20/1	0		SPARE	
	SPARE		0	20/1	13	A	14	20/1	0		SPARE	
	SPARE		0	20/1	15	B	16	20/1	0		SPARE	
	SPARE		0	20/1	17	C	18	20/1	0		SPARE	

DEMAND CATEGORY	Aph(VA)	Bph(VA)	Cph(VA)	TOTAL
Lighting	1225	577	1660	3463
DESIGN LOAD:	1225	577	1660	3463

TOTAL CONNECTED LOAD	VA:	2770
	AMPS:	4.8
TOTAL DESIGN LOAD	VA:	3463
	AMPS:	6.0

42LSC1	42B1
4K1	42C1
21LSD1	41LSD1
21SBK1	42LSA1

PIVOT ARCHITECTURE

REGISTERED PROFESSIONAL ENGINEER — OREGON — JAN 16, 1987 — STEPHEN J. TURNA — 10-23-14 — EXPIRES: 6-30-16

PAE
Portland | San Francisco | Seattle
pae-engineers.com

HOWARD RECONCILED SET
EUGENE SCHOOL DISTRICT
700 HOWARD AVE, EUGENE, OREGON 97404
HOWARD ELEMENTARY SCHOOL

PANEL SCHEDULES - ELECTRICAL

PROJECT #:	1336
ISSUE DATE:	10/28/2014
DRAWN:	AMT
CHECKED:	SJT
REVISIONS:	

E605

PRINTED ON: 10/23/2014 3:15:50 PM FROM FILE: C:\Revit Local Files\13-1532_HES MEP14\13-1532_HES MEP14_stacy.hansen.rvt

© 2014 PIVOT ARCHITECTURE

DESIGNATION: PANEL 21C1		PROJECT NAME: EUGENE SD HOWARD ES							LOCATION: 1ST LEVEL - C-WING IDF - C101	
VOLTAGE: 208Y/120V - 3 Ph - 4 Wire	BUS RATING(A): 150	MAIN(A): 150	SCCR(KA): 14	AVAILABLE FAULT(A): 3914		MOUNTING: Surface		ENCLOSURE: NEMA 1	NOTES:	

NOTES	DESCRIPTION	DEMAND CATEGORY	VA	BKR A/P	CIRCUIT #	PHASE	CIRCUIT #	BKR A/P	VA	DEMAND CATEGORY	DESCRIPTION	NOTES
	CR C109 RECEPTACLES	Receptacles	900	20/1	1	A	2	20/1	720	Receptacles	CR C111 RECEPTACLES	
	CR C109 SHADES	Receptacles	300	20/1	3	B	4	20/1	300	Receptacles	CR C111 SHADES	
	CR C109 RECEPTACLES	Receptacles	720	20/1	5	C	6	20/1	720	Receptacles	CR C111 RECEPTACLES	
	CR C109 TABLET RCPTS	Receptacles	360	20/1	7	A	8	20/1	360	Receptacles	CR C111 TABLET RCPTS	
	CR C109 TABLET RCPTS	Receptacles	360	20/1	9	B	10	20/1	360	Receptacles	CR C111 TABLET RCPTS	
	CR C109 PROJ/SINK RCPTS	Receptacles	540	20/1	11	C	12	20/1	540	Receptacles	CR C111 PROJ/SINK RCPTS	
	CR C107 RECEPTACLES	Receptacles	900	20/1	13	A	14	20/1	900	Receptacles	CR C112 RECEPTACLES	
	CR C107 SHADES	Receptacles	300	20/1	15	B	16	20/1	300	Receptacles	CR C112 SHADES	
	CR C107 RECEPTACLES	Receptacles	720	20/1	17	C	18	20/1	720	Receptacles	CR C112 RECEPTACLES	
	CR C107 TABLET RCPTS	Receptacles	360	20/1	19	A	20	20/1	360	Receptacles	CR C112 TABLET RCPTS	
	CR C107 TABLET RCPTS	Receptacles	360	20/1	21	B	22	20/1	360	Receptacles	CR C112 TABLET RCPTS	
	CR C107 PROJ/SINK RCPTS	Receptacles	540	20/1	23	C	24	20/1	540	Receptacles	CR C112 PROJ/SINK RCPTS	
	HALLWAY C110/C106/C103 RCPTS	Receptacles	540	20/1	25	A	26	20/1	900	Receptacles	CR C113 RECEPTACLES	
	HALLWAY C106/C103 EXT. RCPTS	Receptacles	720	20/1	27	B	28	20/1	300	Receptacles	CR C113 SHADES	
	C103/C102 RCPTS	Receptacles	540	20/1	29	C	30	20/1	720	Receptacles	CR C113 RECEPTACLES	
	C104 HAND DRYER	Equipment	1400	20/1	31	A	32	20/1	360	Receptacles	CR C113 TABLET RCPTS	
	C104 HAND DRYER	Equipment	1400	20/1	33	B	34	20/1	360	Receptacles	CR C113 TABLET RCPTS	
	C105 HAND DRYER	Equipment	1400	20/1	35	C	36	20/1	540	Receptacles	CR C113 PROJ/SINK RCPTS	
	C105 HAND DRYER	Equipment	1400	20/1	37	A	38	20/1			SPARE	
	C102 HAND DRYER	Equipment	1400	20/1	39	B	40	20/1			SPARE	
	SMALL GROUP B134 RCPTS	Receptacles	180	20/1	41	C	42	20/1	100	Equipment	HALLWAY C100-FSD	
	C103 HAND DRYER	Equipment	1400	20/1	43	A	44	20/1			SPARE	
	CR C107 TV/AV EQUIP RCPTS	Receptacles	360	20/1	45	B	46	20/1	180	Equipment	TP-03	
	CR C109 TV/AV EQUIP RCPTS	Receptacles	360	20/1	47	C	48	20/1	0		SPARE	
	CR C111 TV/AV EQUIP RCPTS	Receptacles	360	20/1	49	A	50	20/1	0		SPARE	
	CR C112 TV/AV EQUIP RCPTS	Receptacles	360	20/1	51	B	52	20/1	0		SPARE	
	CR C113 TV/AV EQUIP RCPTS	Receptacles	360	20/1	53	C	54	20/1	0		SPARE	
	SPARE		0	20/1	55	A	56	20/1	0		SPARE	
	SPARE		0	20/1	57	B	58	20/1	0		SPARE	
	SPARE		0	20/1	59	C	60	20/1	0		SPARE	
	SPARE		0	20/1	61	A	62	20/1	0		SPARE	
	SPARE		0	20/1	63	B	64	20/1	0		SPARE	
	SPARE		0	20/1	65	C	66	20/1	0		SPARE	
	SPARE		0	20/1	67	A	68	20/1	0		SPARE	
	SPARE		0	20/1	69	B	70	20/1	0		SPARE	
	SPARE		0	20/1	71	C	72	20/1	0		SPARE	
	SPARE		0	20/1	73	A	74	20/1	0		SPARE	
	SPARE		0	20/1	75	B	76	20/1	0		SPARE	
	SPARE		0	20/1	77	C	78	20/1	0		SPARE	
	SPARE		0	20/1	79	A	80	20/1	0		SPARE	
	SPARE		0	20/1	81	B	82	20/1	0		SPARE	
	SPARE		0	20/1	83	C	84	20/1	0		SPARE	

DEMAND CATEGORY	Aph(VA)	Bph(VA)	Cph(VA)	TOTAL
Receptacles	5177	4037	5536	14750
Equipment	4200	2980	1500	8680
DESIGN LOAD:	9377	7017	7036	23430

TOTAL CONNECTED LOAD	VA:	28180
	AMPS:	93.4
TOTAL DESIGN LOAD	VA:	23430
	AMPS:	78.1

DESIGNATION: PANEL 21A1		PROJECT NAME: EUGENE SD HOWARD ES							LOCATION: 1ST LEVEL - B-WING MDF B120	
VOLTAGE: 208Y/120V - 3 Ph - 4 Wire	BUS RATING(A): 150	MAIN(A): 150	SCCR(KA): 14	AVAILABLE FAULT(A): 3955		MOUNTING: Surface		ENCLOSURE: NEMA 1	NOTES:	

NOTES	DESCRIPTION	DEMAND CATEGORY	VA	BKR A/P	CIRCUIT #	PHASE	CIRCUIT #	BKR A/P	VA	DEMAND CATEGORY	DESCRIPTION	NOTES
	C.R B127 RECEPTACLES	Receptacles	720	20/1	1	A	2	20/1	720	Receptacles	CR 129 RECEPTACLES	
	C.R B127 RECEPTACLES	Receptacles	720	20/1	3	B	4	20/1	300	Receptacles	CR 129 SHADES	
	C.R B127 SHADES	Receptacles	300	20/1	5	C	6	20/1	540	Receptacles	CR 129 RECEPTACLES	
	C.R B127 TABLET RCPTS	Receptacles	360	20/1	7	A	8	20/1	360	Receptacles	CR 129 TABLET RCPTS	
	C.R B127 TABLET RCPTS	Receptacles	360	20/1	9	B	10	20/1	360	Receptacles	CR 129 TABLET RCPTS	
	CR B127 PROJECTOR/SINK RCPT	Receptacles	540	20/1	11	C	12	20/1	540	Receptacles	CR 129 PROJECTOR/SINK RCPT	
	CR B126 RECEPTACLES	Receptacles	720	20/1	13	A	14	20/1	720	Receptacles	CR 131 RECEPTACLES	
	CR B126 SHADES	Receptacles	300	20/1	15	B	16	20/1	300	Receptacles	CR 131 SHADES	
	CR B126 RECEPTACLES	Receptacles	540	20/1	17	C	18	20/1	540	Receptacles	CR 131 RECEPTACLES	
	CR B126 TABLET RCPTS	Receptacles	360	20/1	19	A	20	20/1	360	Receptacles	CR 131 TABLET RCPTS	
	CR B126 TABLET RCPTS	Receptacles	360	20/1	21	B	22	20/1	360	Receptacles	CR 131 TABLET RCPTS	
	CR B126 PROJECTOR/SINK RCPT	Receptacles	540	20/1	23	C	24	20/1	540	Receptacles	CR 131 PROJECTOR/SINK RCPT	
	CR B125A RECEPTACLES	Receptacles	720	20/1	25	A	26	20/1	1180	Equipment	B125 ADA MOTOR	
	CR B125A SHADES	Receptacles	300	20/1	27	B	28	20/1	1180	Equipment	B125 ADA MOTOR	
	CR B125A RECEPTACLES	Receptacles	540	20/1	29	C	30	20/1	1180	Equipment	B125 ADA MOTOR	
	CR B125A TABLET RCPTS	Receptacles	360	20/1	31	A	32	20/1	1400	Equipment	B122 HAND DRYER	
	CR B125A TABLET RCPTS	Receptacles	360	20/1	33	B	34	20/1	1400	Equipment	B122 HAND DRYER	
	CR B125A PROJECTOR/SINK RCPT	Receptacles	540	20/1	35	C	36	20/1	1400	Equipment	B123 HAND DRYER	
	HALLWAY B119/B124 RCPTS	Receptacles	540	20/1	37	A	38	20/1	1400	Equipment	B123 HADN DRYER	
	HALLWAY B124/B128 RCPTS	Receptacles	360	20/1	39	B	40	20/1	1400	Equipment	B125C HAND DRYER	
	B121 RECEPTACLES	Receptacles	180	20/1	41	C	42	20/1	1400	Equipment	B121 HAND DRYER	
	CR B125 TV/AV EQUIP RCPTS	Receptacles	360	20/1	43	A	44	20/1	0		SPARE	
	CR B126 TV/AV EQUIP RCPTS	Receptacles	360	20/1	45	B	46	20/1	0	Equipment	SPARE	
	CR B127 TV/AV EQUIP RCPTS	Receptacles	360	20/1	47	C	48	20/1	0		SPARE	
	CR B126 TV/AV EQUIP RCPTS	Receptacles	360	20/1	49	A	50	20/1	0		SPARE	
	CR B131 TV/AV EQUIP RCPTS	Receptacles	360	20/1	51	B	52	20/1	0		SPARE	
	SPARE		0	20/1	53	C	54	20/1	0		SPARE	
	SPARE		0	20/1	55	A	56	20/1	0		SPARE	
	SPARE		0	20/1	57	B	58	20/1	0		SPARE	
	SPARE		0	20/1	59	C	60	20/1	0		SPARE	
	SPARE		0	20/1	61	A	62	20/1	0		SPARE	
	SPARE		0	20/1	63	B	64	20/1	0		SPARE	
	SPARE		0	20/1	65	C	66	20/1	0		SPARE	
	SPARE		0	20/1	67	A	68	20/1	0		SPARE	
	SPARE		0	20/1	69	B	70	20/1	0		SPARE	
	SPARE		0	20/1	71	C	72	20/1	0		SPARE	
	SPARE		0	20/1	73	A	74	20/1	0		SPARE	
	SPARE		0	20/1	75	B	76	20/1	0		SPARE	
	SPARE		0	20/1	77	C	78	20/1	0		SPARE	
	SPARE		0	20/1	79	A	80	20/1	0		SPARE	
	SPARE		0	20/1	81	B	82	20/1	0		SPARE	
	SPARE		0	20/1	83	C	84	20/1	0		SPARE	

DEMAND CATEGORY	Aph(VA)	Bph(VA)	Cph(VA)	TOTAL
Receptacles	4997	4067	4516	13580
Equipment	3980	3980	3980	11940
DESIGN LOAD:	8976	8047	8497	25520

TOTAL CONNECTED LOAD	VA:	29100
	AMPS:	88.6
TOTAL DESIGN LOAD	VA:	25519
	AMPS:	74.7

DESIGNATION: PANEL 21D1		PROJECT NAME: EUGENE SD HOWARD ES							LOCATION: LEVEL 1 - A-WING ELEC RM A118	
VOLTAGE: 208Y/120V - 3 Ph - 4 Wire	BUS RATING(A): 200	MAIN(A): 200	SCCR(KA): 14	AVAILABLE FAULT(A): 6310		MOUNTING: Surface		ENCLOSURE: NEMA 1	NOTES:	

NOTES	DESCRIPTION	DEMAND CATEGORY	VA	BKR A/P	CIRCUIT #	PHASE	CIRCUIT #	BKR A/P	VA	DEMAND CATEGORY	DESCRIPTION	NOTES
	A116/A117 RCPTS	Receptacles	900	20/1	1	A	2	20/1	360	Receptacles	COMMUNITY A102 RCPTS	
	PE OFFICE A114 RCPTS	Receptacles	720	20/1	3	B	4	20/1	180	Receptacles	COMMUNITY A102 RCPTS	
	LOST & FOUND A115 RCPTS	Receptacles	720	20/1	5	C	6	20/1	180	Receptacles	COMMUNITY A102 RCPTS	
	GYM A111 N RCPTS	Receptacles	720	20/1	7	A	8	20/1	360	Receptacles	COMMUNITY A102 RCPTS	
	GYM A111 E RCPTS	Receptacles	720	20/1	9	B	10	20/1	360	Receptacles	COMMUNITY A102 RCPTS	
	A121/A113 RCPTS	Receptacles	540	20/1	11	C	12	20/1	500	Equipment	CAFE/A102 MOTORIZED SKYLIGHT	
	A113 AUDIO EQUIP RCPTS	Receptacles	720	20/1	13	A	14	20/1	720	Receptacles	A101/A100 RCPTS / LCD SCREEN	
	A113 AUDIO EQUIP RCPTS	Receptacles	720	20/1	15	B	16	20/1	876	Equipment	B-1	
	A113 RCPTS	Receptacles	360	20/1	17	C	18	20/1	876	Equipment	B-2	
	DDC PANEL	Equipment	180	20/1	19	A	20	20/1	800	Equipment	RHWP-101/102	
	CAFETERIA E RCPTS	Receptacles	1180	20/1	21	B	22	20/1	1560	Equipment	RWHHT-101	
	CAFETERIA S RCPTS / LCD SCREEN	Receptacles	900	20/1	23	C	24	20/1	700	Equipment	EF-A200	
	CAFETERIA W/A105 RCPTS	Receptacles	720	20/1	25	A	26	20/1	1180	Equipment	EF-GREASE	
	A106 RCPTS	Receptacles	540	20/1	27	B	28	20/1	530	Equipment	EF-DISH	
	TP-01 / TP-11	Equipment	360	20/1	29	C	30	20/1	540	Receptacles	UTILITY YARD	
	CAFETERIA PROJECTOR	Equipment	800	20/1	31	A	32	20/1	200	Equipment	IRRIGATION CONTROLLER	
	S GYM PROJECTOR	Equipment	800	20/1	33	B	34	20/1	540	Receptacles	BOILER ROOM	
	N GYM PROJECTOR	Equipment	800	20/1	35	C	36	20/1	360	Receptacles	ELECTRICAL ROOM	
	S HOOP MOTOR	Equipment	1000	20/1	37	A	38	20/1	1180	Equipment	DCU BFP PUMP	
	N HOOP MOTOR	Equipment	1000	20/1	39	B	40	20/1	1180	Equipment	RP BFP PUMP 1	
	GYM MOTORIZED SKYLIGHT	Equipment	1000	20/1	41	C	42	20/1	1180	Equipment	RP BFP PUMP 2	
	GYM MOTORIZED SKYLIGHT	Equipment	1000	20/1	43	A	44	20/1	1400	Equipment	A109 HAND DRYER	
	GYM/CAFE MOTOR SKYLIGHT	Equipment	1000	20/1	45	B	46	20/1	1400	Equipment	A109 HAND DRYER	
	GWH-101 / GWH-102	Equipment	180	20/1	47	C	48	20/1	1400	Equipment	A110 HAND DRYER	
	RHWP-101 / RHTWP-101	Equipment	792	20/1	49	A	50	20/1	1400	Equipment	A110 HAND DRYER	
	SPARE		0	20/1	51	B	52	20/1	1400	Equipment	A107 HAND DRYER	
	MECH LOFT A200 RCPTS	Receptacles	720	20/1	53	C	54	20/1	700	Equipment	RHP-INJ	
	CAFE SECTIONAL DOORS	Equipment	1123	20/2	55	A	56	20/1	700	Equipment	RHP-ZN	
			1123		57	B	58	20/1	500	Equipment	IRRIGATION WELL PUMP CTRL	
	SPARE			20/1	59	C	60	20/1			SPARE	
	SPARE			20/1	61	A	62	20/1			SPARE	
	SPARE			20/1	63	B	64	20/1			SPARE	
	SPARE			20/1	65	C	66	20/1			SPARE	
	SPARE			20/1	67	A	68	20/1			SPARE	
	SPARE			20/1	69	B	70	20/1			SPARE	
	SPARE			20/1	71	C	72	20/1			SPARE	
	SPARE			20/1	73	A	74	20/1			SPARE	
	SPARE			20/1	75	B	76	20/1			SPARE	
	SPARE			20/1	77	C	78	20/1			SPARE	
	SPARE			20/1	79	A	80	20/1			SPARE	
	SPARE			20/1	81	B	82	20/1			SPARE	
	SPARE			20/1	83	C	84	20/1			SPARE	

DEMAND CATEGORY	Aph(VA)	Bph(VA)	Cph(VA)	TOTAL
Receptacles	3917	4147	3826	11890
Equipment	11755	11369	7696	30820
DESIGN LOAD:	15671	15515	11522	42709

TOTAL CONNECTED LOAD	VA:	44600
	AMPS:	136.0
TOTAL DESIGN LOAD	VA:	42709
	AMPS:	130.5

DESIGNATION: PANEL 21A2		PROJECT NAME: EUGENE SD HOWARD ES							LOCATION: 1ST LEVEL - B-WING MDF B120	
VOLTAGE: 208Y/120V - 3 Ph - 4 Wire	BUS RATING(A): 100	MAIN(A): 100	SCCR(KA): 14	AVAILABLE FAULT(A): 3955		MOUNTING: Surface		ENCLOSURE: NEMA 1	NOTES:	

NOTES	DESCRIPTION	DEMAND CATEGORY	VA	BKR A/P	CIRCUIT #	PHASE	CIRCUIT #	BKR A/P	VA	DEMAND CATEGORY	DESCRIPTION	NOTES
	SPARE			20/1	1	A	2	20/1	100	Lighting	LTG - ELEVATOR	
	B132 W RCPTS	Receptacles	900	20/1	3	B	4	20/1	360	Receptacles	ELEVATOR - RCPTS	
	B133 N RCPTS	Receptacles	540	20/1	5	C	6	20/1			SPARE	
	B133 E RCPTS / LCD SCREEN	Receptacles	540	20/1	7	A	8	20/1			SPARE	
	B133 W RCPTS	Receptacles	180	20/1	9	B	10	20/1			SPARE	
	B133 W RCPTS	Receptacles	180	20/1	11	C	12	20/1	180	Equipment	TP-05	
	B133 W RCPTS	Receptacles	180	20/1	13	A	14	20/1	1176	Equipment	SP-1	
	B133 COPIER	Equipment	1200	20/1	15	B	16	20/1	0		SPARE	
	B133 S RCPTS	Receptacles	540	20/1	17	C	18	20/1	0		SPARE	
	B132 PROJECTOR	Equipment	800	20/1	19	A	20	20/1	0		SPARE	
	B132 MOTORIZED SCREEN	Equipment	500	20/1	21	B	22	20/1	0		SPARE	
	B132 RECEPTACLES	Receptacles	540	20/1	23	C	24	20/1	0		SPARE	
	B132 SHADES	Receptacles	400	20/1	25	A	26	20/1	0		SPARE	
	SPARE		0	20/1	27	B	28	20/1	0		SPARE	
	SPARE		0	20/1	29	C	30	20/1	0		SPARE	
	SPARE		0	20/1	31	A	32	20/1	0		SPARE	
	SPARE		0	20/1	33	B	34	20/1	0		SPARE	
	SPARE		0	20/1	35	C	36	20/1	0		SPARE	
	SPARE		0	20/1	37	A	38	20/1	0		SPARE	
	SPARE		0	20/1	39	B	40	20/1	0		SPARE	
	SPARE		0	20/1	41	C	42	20/1	0		SPARE	

DEMAND CATEGORY	Aph(VA)	Bph(VA)	Cph(VA)	TOTAL
Lighting	125	0	0	125
Receptacles	1120	1440	1800	4360
Equipment	1976	1700	180	3856
DESIGN LOAD:	3221	3140	1980	8341

TOTAL CONNECTED LOAD	VA:	8316
	AMPS:	26.6
TOTAL DESIGN LOAD	VA:	8341
	AMPS:	26.8

DESIGNATION: PANEL 21SBA1		PROJECT NAME: EUGENE SD HOWARD ES							LOCATION: 1ST LEVEL - B-WING MDF B120	
VOLTAGE: 208Y/120V - 3 Ph - 4 Wire	BUS RATING(A): 100	MAIN(A): 100	SCCR(KA): 14	AVAILABLE FAULT(A): 1867		MOUNTING: Surface		ENCLOSURE: NEMA 1	NOTES:	

NOTES	DESCRIPTION	DEMAND CATEGORY	VA	BKR A/P	CIRCUIT #	PHASE	CIRCUIT #	BKR A/P	VA	DEMAND CATEGORY	DESCRIPTION	NOTES
	SMALL GROUP B116 RCPTS	Receptacles	900	20/1	1	A	2	20/1	900	Receptacles	SECRETARY B101 RCPTS	
	B114/B115 RECEPTACLES	Receptacles	720	20/1	3	B	4	20/1	720	Receptacles	PRINCIPAL B102 RECEPTACLES	
	B114/B115 RECEPTACLES	Receptacles	720	20/1	5	C	6	20/1	540	Receptacles	PRINCIPAL B102 RECEPTACLES	
	B108/B106/B104 RCPTS	Receptacles	720	20/1	7	A	8	20/1	720	Receptacles	STAFF RM B103 RECEPTACLES	
	OFFICE B107 RECEPTACLES	Receptacles	540	20/1	9	B	10	20/1	720	Receptacles	STAFF RM B103 RECEPTACLES	
	B117/B110 RECEPTACLES	Receptacles	900	20/1	11	C	12	20/1	540	Equipment	STAFF RM B103 MICROWAVE	
	CONF B110 RECEPTACLES	Receptacles	900	20/1	13	A	14	20/1	540	Equipment	STAFF RM B103 MICROWAVE	
	HEALTH B106 RECEPTACLES	Receptacles	900	20/1	15	B	16	20/1	900	Equipment	STAFF RM B103 DISHWASHER	
	WORKRM B113 COPIER	Receptacles	900	20/1	17	C	18	20/1	1000	Equipment	STAFF RM B103 REFRIGERATOR	
	WORKRM B113 RECEPTACLES	Receptacles	720	20/1	19	A	20	20/1	1000	Equipment	STAFF RM B103 REFRIGERATOR	
	B113/B112/B111 RCPTS	Receptacles	900	20/1	21	B	22	30/2	1500	Equipment	CHANGING RM B125C WASHER/DRYER	
	RECEPTION B100 RCPTS	Receptacles	720	20/1	23	C	24		1500			
	RECEPTION B100 RCPTS	Receptacles	720	20/1	25	A	26	20/1	180	Receptacles	ELEVATOR CAB	
	B104/B105/B100 RCPTS	Receptacles	900	20/1	27	B	28	20/1			SPARE	
	B104 HAND DRYER	Equipment	1400	20/1	29	C	30	20/1			SPARE	
	B104 HAND DRYER	Equipment	1400	20/1	31	A	32	20/1			SPARE	
	B108 HAND DRYER	Equipment	1400	20/1	33	B	34	20/1			SPARE	
	SPARE			20/1	35	C	36	20/1			SPARE	
	SPARE			20/1	37	A	38	20/1			SPARE	
	SPARE			20/1	39	B	40	20/1			SPARE	
	SPARE			20/1	41	C	42	20/1			SPARE	

DEMAND CATEGORY	Aph(VA)	Bph(VA)	Cph(VA)	TOTAL
Receptacles	4546	4366	3556	12469
Equipment	2940	3800	4440	11180
DESIGN LOAD:	7486	8167	7997	23649

TOTAL CONNECTED LOAD	VA:	26120
	AMPS:	76.6
TOTAL DESIGN LOAD	VA:	23650
	AMPS:	68.0

DESIGNATION: PANEL 21B1		PROJECT NAME: EUGENE SD HOWARD ES							LOCATION: 1ST LEVEL - B-WING HALLWAY B143	
VOLTAGE: 208Y/120V - 3 Ph - 4 Wire	BUS RATING(A): 150	MAIN(A): 150	SCCR(KA): 14	AVAILABLE FAULT(A): 3443		MOUNTING: Flush		ENCLOSURE: NEMA 1	NOTES:	

NOTES	DESCRIPTION	DEMAND CATEGORY	VA	BKR A/P	CIRCUIT #	PHASE	CIRCUIT #	BKR A/P	VA	DEMAND CATEGORY	DESCRIPTION	NOTES
	CR B146 RECEPTACLES	Receptacles	720	20/1	1	A	2	20/1	720	Receptacles	CR B148 RECEPTACLES	
	CR B146 SHADES	Receptacles	300	20/1	3	B	4	20/1	300	Receptacles	CR B148 SHADES	
	CR B146 RECEPTACLES	Receptacles	540	20/1	5	C	6	20/1	540	Receptacles	CR B148 RECEPTACLES	
	CR B146 TABLET RCPTS	Receptacles	360	20/1	7	A	8	20/1	360	Receptacles	CR B148 TABLET RCPTS	
	CR B146 TABLET RCPTS	Receptacles	360	20/1	9	B	10	20/1	360	Receptacles	CR B148 TABLET RCPTS	
	CR B146 PROJ/SINK RCPTS	Receptacles	540	20/1	11	C	12	20/1	540	Receptacles	CR B148 PROJ/SINK RCPTS	
	CR B144 RECEPTACLES	Receptacles	720	20/1	13	A	14	20/1	720	Receptacles	CR B149 RECEPTACLES	
	CR B144 SHADES	Receptacles	300	20/1	15	B	16	20/1	300	Receptacles	CR B149 SHADES	
	CR B144 RECEPTACLES	Receptacles	540	20/1	17	C	18	20/1	540	Receptacles	CR B149 RECEPTACLES	
	CR B144 TABLET RCPTS	Receptacles	360	20/1	19	A	20	20/1	360	Receptacles	CR B149 TABLET RCPTS	
	CR B144 TABLET RCPTS	Receptacles	360	20/1	21	B	22	20/1	360	Receptacles	CR B149 TABLET RCPTS	
	CR B144 PROJ/SINK RCPTS	Receptacles	540	20/1	23	C	24	20/1	540	Receptacles	CR B149 PROJ/SINK RCPTS	
	HALLWAY B143/B147 RCPTS	Receptacles	540	20/1	25	A	26	20/1	720	Receptacles	CR B150 RECEPTACLES	
	HALLWAY B143/B137 RCPTS	Receptacles	360	20/1	27	B	28	20/1	300	Receptacles	CR B150 SHADES	
	B140/B139/B138 RCPTS	Receptacles	540	20/1	29	C	30	20/1	540	Receptacles	CR B150 RECEPTACLES	
	OFFICE B136 RECEPTACLES	Receptacles	360	20/1	31	A	32	20/1	360	Receptacles	CR B150 TABLET RCPTS	
	B141 HAND DRYER	Equipment	1400	20/1	33	B	34	20/1	360	Receptacles	CR B150 TABLET RCPTS	
	B141 HAND DRYER	Equipment	1400	20/1	35	C	36	20/1	540	Receptacles	CR B150 PROJ/SINK RCPTS	
	B142 HAND DRYER	Equipment	1400	20/1	37	A	38	20/2	416	Equipment	AH-CFCS	
	B142 HAND DRYER	Equipment	1400	20/1	39	B	40		416			
	CR B144 TV/AV EQUIP RCPTS	Receptacles	360	20/1	41	C	42	20/1	180	Equipment	TP-04	
	CR B146 TV/AV EQUIP RCPTS	Receptacles	360	20/1	43	A	44	20/1	0		SPARE	
	CR B148 TV/AV EQUIP RCPTS	Receptacles	360	20/1	45	B	46	20/1	0		SPARE	
	CR B149 TV/AV EQUIP RCPTS	Receptacles	360	20/1	47	C	48	20/1	0		SPARE	
	CR B150 TV/AV EQUIP RCPTS	Receptacles	360	20/1	49	A	50	20/1	0		SPARE	
	SPARE		0	20/1	51	B	52	20/1	0		SPARE	
	SPARE		0	20/1	53	C	54	20/1	0		SPARE	
	SPARE		0	20/1	55	A	56	20/1	0		SPARE	
	SPARE		0	20/1	57	B	58	20/1	0		SPARE	
	SPARE		0	20/1	59	C	60	20/1	0		SPARE	
	SPARE		0	20/1	61	A	62	20/1	0		SPARE	
	SPARE		0	20/1	63	B	64	20/1	0		SPARE	
	SPARE		0	20/1	65	C	66	20/1	0		SPARE	
	SPARE		0	20/1	67	A	68	20/1	0		SPARE	
	SPARE		0	20/1	69	B	70	20/1	0		SPARE	
	SPARE		0

© 2014 PIVOT ARCHITECTURE

DESIGNATION: PANEL 2K1	PROJECT NAME: EUGENE SD HOWARD ES	LOCATION: 1ST LEVEL - A-WING KITCHEN A104
VOLTAGE: 208Y/120V - 3 Ph - 4 Wire / BUS RATING(A): 200	MAIN(A): 200 / SCCR(KA): 14 / AVAILABLE FAULT(A): 4987 / MOUNTING: Flush	ENCLOSURE: NEMA 1 / NOTES:

NOTES	DESCRIPTION	DEMAND CATEGORY	VA	BKR A/P	CIRCUIT #	PHASE	CIRCUIT #	BKR A/P	VA	DEMAND CATEGORY	DESCRIPTION	NOTES
	AIR CURTAIN	Kitchen Equip	354	20/2	1	A	2	20/3	1008	Kitchen Equip	30-QUART MIXER	
			354		3	B	4		1008			
	KITCHEN RECEPTACLES	Receptacles	1440	20/1	5	C	6		1008			
	FIRE-PROTECTION SYSTEM	Kitchen Equip	1000	20/1	7	A	8	20/1	1440	Kitchen Equip	MOBILE HEATED / PROOFING CABINET	
	KITCHEN RECEPTACLES	Receptacles	1440	20/1	9	B	10	20/1	1312	Kitchen Equip	HO FOOD SERVING STATION / CANOPY HOOD_TG	
	MOBILE HEATED / PROOFING CABINET	Kitchen Equip	1440	20/1	11	C	12	25/3	6480	Kitchen Equip	20G TILTING KETTLE	
	EF-CUST	Equipment	54	20/1	13	A	14		6480			
	FOOD GUARD DISPLAY LTG	Lighting	1275	20/1	15	B	16		6480			
	FOOD GUARD DISPLAY LTG	Lighting	1275	20/1	17	C	18				SHUNT TRIP FOR KETTLE	
	HOT FOOD SERVING STATION	Kitchen Equip	1152	20/1	19	A	20	20/3	2590	Kitchen Equip	DBL STACK COMBI OVEN STEAMERS	
	MOBILE DBL-SIDED MILK / FRUIT	Kitchen Equip	1716	20/1	21	B	22		2590			
	MOBILE DBL-SIDED FRUIT / POS	Kitchen Equip	1900	20/1	23	C	24		2590			
	WAREWASHER DETERGENT	Kitchen Equip	1440	20/1	25	A	26				SHUNT TRIP FOR OVEN	
	KITCHEN - DESK RCPTS	Receptacles	180	20/1	27	B	28	20/3	667	Kitchen Equip	WASTE COLLECTOR	
	KITCHEN - A104 RCPTS	Receptacles	360	20/1	29	C	30		667			
	KITCHEN RCPTS	Receptacles	360	20/1	31	A	32		667			
	KITCHEN RCPTS	Receptacles	360	20/1	33	B	34	20/1	1380	Kitchen Equip	ICE CUBE MACHINE	
	EWH-101	Equipment	1997	30/2	35	C	36	20/3	2590	Kitchen Equip	DBL STACK COMBI OVEN STEAMERS	
			1997		37	A	38		2590			
	CONVECTION STEAMER	Kitchen Equip	1800	20/1	39	B	40		2590			
	SHUNT TRIP FOR STEAMER		0		41	C	42				SHUNT TRIP FOR OVEN	
	TP-02	Equipment	180	20/1	43	A	44	20/1			SPARE	
	SPARE			20/1	45	B	46	20/1			SPARE	
	SPARE			20/1	47	C	48	20/1			SPARE	
	SPARE			20/1	49	A	50	20/1			SPARE	
	SPARE			20/1	51	B	52	20/1			SPARE	
	SPARE			20/1	53	C	54	20/1			SPARE	

DEMAND CATEGORY	Aph(VA)	Bph(VA)	Cph(VA)	TOTAL
Kitchen Equip	12168	12933	10839	35940
Receptacles	360	1980	1800	4140
Equipment	2231	0	1997	4228
Lighting	0	1594	1594	3188
DESIGN LOAD:	14759	16507	16229	47495

TOTAL CONNECTED LOAD	VA:	66210
	AMPS:	192.8
TOTAL DESIGN LOAD	VA:	47495
	AMPS:	137.5

DESIGNATION: PANEL MDF	PROJECT NAME: EUGENE SD HOWARD ES	LOCATION:
VOLTAGE: 208Y/120V - 3 Ph - 4 Wire / BUS RATING(A): 100	MAIN(A): 100 / SCCR(KA): 14 / AVAILABLE FAULT(A): 1467 / MOUNTING: Surface	ENCLOSURE: NEMA 1 / NOTES:

NOTES	DESCRIPTION	DEMAND CATEGORY	VA	BKR A/P	CIRCUIT #	PHASE	CIRCUIT #	BKR A/P	VA	DEMAND CATEGORY	DESCRIPTION	NOTES
	MDF B120 - RECEP	Receptacles	360	20/1	1	A	2	20/1	360	Receptacles	MDF B120 - RECEP	
	MDF B120 - RECEP	Receptacles	180	20/1	3	B	4	30/2	180	Receptacles	MDF B120 - 30A RECEP	
	FCU-MDF	Equipment	448	20/2	5	C	6		180			
			448		7	A	8	35/2	1500	Equipment	ACCU-MDF	
	EF-MDF	Equipment	2040	30/1	9	B	10		1500			
	FCU-ELEC	Equipment	448	20/2	11	C	12	20/2	900	Equipment	ACCU-B-IDF	
			448		13	A	14		900			
	SPARE			20/1	15	B	16	20/2	900	Equipment	ACCU-C-IDF	
	SPARE			20/1	17	C	18		900			
	SPARE			20/1	19	A	20	20/2	1132	Equipment	ACCU-ELEC	
	SPARE			20/1	21	B	22		1132			
	SPARE			20/1	23	C	24				SPACE	
	SPARE			20/1	25	A	26				SPACE	
	SPARE			20/1	27	B	28				SPACE	
	SPARE			20/1	29	C	30				SPACE	
	SPARE			20/1	31	A	32				SPACE	
	SPARE			20/1	33	B	34				SPACE	
	SPARE			20/1	35	C	36				SPACE	
	SPARE			20/1	37	A	38				SPACE	
	SPARE			20/1	39	B	40				SPACE	
	SPARE			20/1	41	C	42				SPACE	

DEMAND CATEGORY	Aph(VA)	Bph(VA)	Cph(VA)	TOTAL
Receptacles	720	360	180	1260
Equipment	4428	5572	2696	12696
DESIGN LOAD:	5148	5932	2876	13956

TOTAL CONNECTED LOAD	VA:	13956
	AMPS:	49.4
TOTAL DESIGN LOAD	VA:	13956
	AMPS:	49.4

DESIGNATION: PANEL IDF-1	PROJECT NAME: EUGENE SD HOWARD ES	LOCATION:
VOLTAGE: 208Y/120V - 3 Ph - 4 Wire / BUS RATING(A): 60	MAIN(A): 60 / SCCR(KA): 14 / AVAILABLE FAULT(A): 1189 / MOUNTING: Surface	ENCLOSURE: NEMA 1 / NOTES:

NOTES	DESCRIPTION	DEMAND CATEGORY	VA	BKR A/P	CIRCUIT #	PHASE	CIRCUIT #	BKR A/P	VA	DEMAND CATEGORY	DESCRIPTION	NOTES
	IDF B238 - RECEP	Receptacles	180	20/1	1	A	2	20/1	360	Receptacles	IDF B238 - RECEP	
	IDF B238 - RECEP	Receptacles	180	20/1	3	B	4	30/2	180	Receptacles	IDF B238 30A - RECEP	
	IDF B238 - RECEP	Receptacles	180	20/1	5	C	6		180			
	SPARE			20/1	7	A	8	20/2	448	Equipment	FCU-B-IDF	
	SPARE			20/1	9	B	10		448			
	SPARE			20/1	11	C	12	20/1	864	Equipment	EF-BIDF	
	SPARE			20/1	13	A	14	20/1			SPARE	
	SPARE			20/1	15	B	16	20/1			SPARE	
	SPARE			20/1	17	C	18	20/1			SPARE	

DEMAND CATEGORY	Aph(VA)	Bph(VA)	Cph(VA)	TOTAL
Receptacles	540	360	360	1260
Equipment	448	448	864	1760
DESIGN LOAD:	988	808	1224	3020

TOTAL CONNECTED LOAD	VA:	3020
	AMPS:	10.2
TOTAL DESIGN LOAD	VA:	3020
	AMPS:	10.2

DESIGNATION: PANEL IDF-2	PROJECT NAME: EUGENE SD HOWARD ES	LOCATION:
VOLTAGE: 208Y/120V - 3 Ph - 4 Wire / BUS RATING(A): 60	MAIN(A): 60 / SCCR(KA): 14 / AVAILABLE FAULT(A): 1443 / MOUNTING: Surface	ENCLOSURE: NEMA 1 / NOTES:

NOTES	DESCRIPTION	DEMAND CATEGORY	VA	BKR A/P	CIRCUIT #	PHASE	CIRCUIT #	BKR A/P	VA	DEMAND CATEGORY	DESCRIPTION	NOTES
	IDF C101 - RECEP	Receptacles	180	20/1	1	A	2	20/1	360	Receptacles	IDF C101 - RECEP	
	IDF C101 - RECEP	Receptacles	180	20/1	3	B	4	30/2	180	Receptacles	IDF C101 - 30A RECEP	
	IDF C101 - RECEP	Receptacles	180	20/1	5	C	6		180			
	SPARE			20/1	7	A	8	20/2	480	Equipment	FCU-C-IDF	
	SPARE			20/1	9	B	10		480			
	SPARE			20/1	11	C	12	20/1	864	Equipment	EF-CIDF	
				20/1	13	A	14					
				20/1	15	B	16					
				20/1	17	C	18					

DEMAND CATEGORY	Aph(VA)	Bph(VA)	Cph(VA)	TOTAL
Receptacles	540	360	360	1260
Equipment	480	480	864	1824
DESIGN LOAD:	1020	840	1224	3084

TOTAL CONNECTED LOAD	VA:	3084
	AMPS:	10.2
TOTAL DESIGN LOAD	VA:	3084
	AMPS:	10.2

DESIGNATION: PANEL 22A1	PROJECT NAME: EUGENE SD HOWARD ES	LOCATION: 2ND LEVEL - B-WING HALLWAY B224
VOLTAGE: 208Y/120V - 3 Ph - 4 Wire / BUS RATING(A): 150	MAIN(A): 150 / SCCR(KA): 14 / AVAILABLE FAULT(A): 3757 / MOUNTING: Flush	ENCLOSURE: NEMA 1 / NOTES:

NOTES	DESCRIPTION	DEMAND CATEGORY	VA	BKR A/P	CIRCUIT #	PHASE	CIRCUIT #	BKR A/P	VA	DEMAND CATEGORY	DESCRIPTION	NOTES
	CR B227 RECEPTACLES	Receptacles	900	20/1	1	A	2	20/1	720	Receptacles	CR B229 RECEPTACLES	
	CR B227 SHADES	Receptacles	300	20/1	3	B	4	20/1	300	Receptacles	CR B229 SHADES	
	CR B227 RECEPTACLES	Receptacles	720	20/1	5	C	6	20/1	720	Receptacles	CR B229 RECEPTACLES	
	CR B227 TABLET RCPTS	Receptacles	360	20/1	7	A	8	20/1	360	Receptacles	CR B229 TABLET RCPTS	
	CR B227 TABLET RCPTS	Receptacles	360	20/1	9	B	10	20/1	360	Receptacles	CR B229 TABLET RCPTS	
	CR B227 PROJ/SINK RCPTS	Receptacles	540	20/1	11	C	12	20/1	540	Receptacles	CR B229 PROJ/SINK RCPTS	
	CR B228 RECEPTACLES	Receptacles	720	20/1	13	A	14	20/1	720	Receptacles	CR B231 RECEPTACLES	
	CR B228 SHADES	Receptacles	300	20/1	15	B	16	20/1	300	Receptacles	CR B231 SHADES	
	CR B228 RECEPTACLES	Receptacles	720	20/1	17	C	18	20/1	720	Receptacles	CR B231 RECEPTACLES	
	CR B228 TABLET RCPTS	Receptacles	360	20/1	19	A	20	20/1	360	Receptacles	CR B231 TABLET RCPTS	
	CR B228 TABLET RCPTS	Receptacles	360	20/1	21	B	22	20/1	360	Receptacles	CR B231 TABLET RCPTS	
	CR B226 PROJ/SINK RCPTS	Receptacles	540	20/1	23	C	24	20/1	540	Receptacles	CR B231 PROJ/SINK RCPTS	
	CR B225 RECEPTACLES	Receptacles	720	20/1	25	A	26	20/1	540	Receptacles	B217/B220/B221 RCPTS	
	CR B225 SHADES	Receptacles	300	20/1	27	B	28	20/1	720	Receptacles	WORKROOM B218 RCPTS	
	CR B225 RECEPTACLES	Receptacles	720	20/1	29	C	30	20/1	360	Receptacles	SMALL GROUP B216 RCPTS	
	CR B225 TABLET RCPTS	Receptacles	360	20/1	31	A	32	20/1	696	Equipment	EF-TLT	
	CR B225 TABLET RCPTS	Receptacles	360	20/1	33	B	34	20/1	0		SPARE	
	CR B225 PROJ/SINK RCPTS	Receptacles	540	20/1	35	C	36	20/1	1400	Equipment	B222 HAND DRYER	
	HALLWAY B224/B219 RCPTS	Receptacles	360	20/1	37	A	38	20/1	1400	Equipment	B222 HAND DRYER	
	HALLWAY B228/B224/B219	Receptacles	540	20/1	39	B	40	20/1	1400	Equipment	B223 HAND DRYER	
	CR B225 TV/AV EQUIP RCPTS	Receptacles	360	20/1	41	C	42	20/1	1400	Equipment	B223 HAND DRYER	
	CR B226 TV/AV EQUIP RCPTS	Receptacles	360	20/1	43	A	44	20/1	1400	Equipment	B220 HAND DRYER	
	CR B227 TV/AV EQUIP RCPTS	Receptacles	360	20/1	45	B	46	20/1	1400	Equipment	B221 HAND DRYER	
	CR B229 TV/AV EQUPI RCPTS	Receptacles	360	20/1	47	C	48	20/1	1500	Receptacles	CR 218 COPIER	
	CR B231 TV/AV EQUIP RCPTS	Receptacles	360	20/1	49	A	50	20/1	0		SPARE	
	MECH LOFT B300	Receptacles	540	20/1	51	B	52	20/1	0		SPARE	
	MECH LOFT B300	Receptacles	540	20/1	53	C	54	20/1	0		SPARE	
	SPARE		0	20/1	55	A	56	20/1	0		SPARE	
	SPARE		0	20/1	57	B	58	20/1	180		TP-06	
	SPARE		0	20/1	59	C	60	20/1	0		SPARE	
	SPARE		0	20/1	61	A	62	20/1	0		SPARE	
	SPARE		0	20/1	63	B	64	20/1	0		SPARE	
	SPARE		0	20/1	65	C	66	20/1	0		SPARE	
	SPARE		0	20/1	67	A	68	20/1	0		SPARE	
	SPARE		0	20/1	69	B	70	20/1	0		SPARE	
	SPARE		0	20/1	71	C	72	20/1	0		SPARE	
	SPARE		0	20/1	73	A	74	20/1	0		SPARE	
	SPARE		0	20/1	75	B	76	20/1	0		SPARE	
	SPARE		0	20/1	77	C	78	20/1	0		SPARE	
	SPARE		0	20/1	79	A	80	20/1	0		SPARE	
	SPARE		0	20/1	81	B	82	20/1	0		SPARE	
	SPARE		0	20/1	83	C	84	20/1	0		SPARE	

DEMAND CATEGORY	Aph(VA)	Bph(VA)	Cph(VA)	TOTAL
Receptacles	5267	4397	6377	16040
Equipment	3496	2800	2800	9096
	0	225	0	225
DESIGN LOAD:	8763	7421	9177	25361

TOTAL CONNECTED LOAD	VA:	31356
	AMPS:	101.8
TOTAL DESIGN LOAD	VA:	25361
	AMPS:	76.4

DESIGNATION: PANEL 22B1	PROJECT NAME: EUGENE SD HOWARD ES	LOCATION: 2ND LEVEL - B-WING IDF B238
VOLTAGE: 208Y/120V - 3 Ph - 4 Wire / BUS RATING(A): 150	MAIN(A): 150 / SCCR(KA): 14 / AVAILABLE FAULT(A): 3443 / MOUNTING: Surface	ENCLOSURE: NEMA 1 / NOTES:

NOTES	DESCRIPTION	DEMAND CATEGORY	VA	BKR A/P	CIRCUIT #	PHASE	CIRCUIT #	BKR A/P	VA	DEMAND CATEGORY	DESCRIPTION	NOTES
	CR B246 RECEPTACLES	Receptacles	720	20/1	1	A	2	20/1	900	Receptacles	CR B248 RECEPTACLES	
	CR B246 SHADES	Receptacles	300	20/1	3	B	4	20/1	300	Receptacles	CR B248 SHADES	
	CR B246 RECEPTACLES	Receptacles	720	20/1	5	C	6	20/1	720	Receptacles	CR B248 RECEPTACLES	
	CR B246 TABLET RCPTS	Receptacles	360	20/1	7	A	8	20/1	360	Receptacles	CR B248 TABLET RCPTS	
	CR B246 TABLET RCPTS	Receptacles	360	20/1	9	B	10	20/1	360	Receptacles	CR B248 TABLET RCPTS	
	CR B246 PROJ/SINK RCPTS	Receptacles	540	20/1	11	C	12	20/1	540	Receptacles	CR B248 PROJ/SINK RCPTS	
	CR B244 RECEPTACLES	Receptacles	720	20/1	13	A	14	20/1	720	Receptacles	CR B249 RECEPTACLES	
	CR B244 SHADES	Receptacles	300	20/1	15	B	16	20/1	300	Receptacles	CR B249 SHADES	
	CR B244 RECEPTACLES	Receptacles	720	20/1	17	C	18	20/1	720	Receptacles	CR B249 RECEPTACLES	
	CR B244 TABLET RCPTS	Receptacles	360	20/1	19	A	20	20/1	360	Receptacles	CR B249 TABLET RCPTS	
	CR B244 TABLET RCPTS	Receptacles	360	20/1	21	B	22	20/1	360	Receptacles	CR B249 TABLET RCPTS	
	CR B244 PROJ/SINK RCPTS	Receptacles	540	20/1	23	C	24	20/1	540	Receptacles	CR B249 PROJ/SINK RCPTS	
	HALLWAY B247/B243/B237	Receptacles	540	20/1	25	A	26	20/1	720	Receptacles	CR B250 RECEPTACLES	
	HALLWAY B243/B237	Receptacles	360	20/1	27	B	28	20/1	300	Receptacles	CR B250 SHADES	
	B240/B239/B237	Receptacles	540	20/1	29	C	30	20/1	720	Receptacles	CR B250 RECEPTACLES	
	HALLWAY/B235	Receptacles	360	20/1	31	A	32	20/1	360	Receptacles	CR B250 TABLET RCPTS	
	B241 HAND DRYER	Equipment	1400	20/1	33	B	34	20/1	360	Receptacles	CR B250 TABLET RCPTS	
	B241 HAND DRYER	Equipment	1400	20/1	35	C	36	20/1	540	Receptacles	CR B250 PROJ/SINK RCPTS	
	B242 HAND DRYER	Equipment	1400	20/1	37	A	38	20/1	720	Receptacles	OFFICE B236/B234 RCPTS	
	B242 HAND DRYER	Equipment	1400	20/1	39	B	40	20/1			SPARE	
	B239 HAND DRYER	Equipment	1400	20/1	41	C	42	20/1			SPARE	
	B240 HAND DRYER	Equipment	1400	20/1	43	A	44	30/1			SPARE	
	CR B244 TV/AV EQUIP RCPTS	Receptacles	360	20/1	45	B	46	20/1			SPARE	
	CR B246 TV/AV EQUIP RCPTS	Receptacles	360	20/1	47	C	48	20/1	360	Equipment	TP-07 / TP-10	
	CR B248 TV/AV EQUIP RCPTS	Receptacles	360	20/1	49	A	50	20/1			SPARE	
	CR B249 TV/AV EQUIP RCPTS	Receptacles	360	20/1	51	B	52	20/1			SPARE	
	CR B250 TV/AV EQUIP RCPTS	Receptacles	360	20/1	53	C	54	20/1			SPARE	
	MECH LOFT B301	Receptacles	540	20/1	55	A	56	20/1			SPARE	
	MECH LOFT B301	Receptacles	540	20/1	57	B	58	20/1			SPARE	
	MECH LOFT A201	Receptacles	720	20/1	59	C	60	20/1			SPARE	
	SPARE			20/1	61	A	62	20/1			SPARE	
	SPARE			20/1	63	B	64	20/1			SPARE	
	SPARE			20/1	65	C	66	20/1			SPARE	
	SPARE			20/1	67	A	68	20/1			SPARE	
	SPARE			20/1	69	B	70	20/1			SPARE	
	SPARE			20/1	71	C	72	20/1			SPARE	
	SPARE			20/1	73	A	74	20/1			SPARE	
	SPARE			20/1	75	B	76	20/1			SPARE	
	SPARE			20/1	77	C	78	20/1			SPARE	
	SPARE			20/1	79	A	80	20/1			SPARE	
	SPARE			20/1	81	B	82	20/1			SPARE	
	SPARE			20/1	83	C	84	20/1			SPARE	

DEMAND CATEGORY	Aph(VA)	Bph(VA)	Cph(VA)	TOTAL
Receptacles	5717	5177	5807	16700
Equipment	2800	2800	3160	8760
DESIGN LOAD:	8517	7977	8967	25460

TOTAL CONNECTED LOAD	VA:	32160
	AMPS:	95.3
TOTAL DESIGN LOAD	VA:	25460
	AMPS:	74.7

DESIGNATION: PANEL 22C1	PROJECT NAME: EUGENE SD HOWARD ES	LOCATION: 2ND LEVEL - C-WING HALLWAY C206
VOLTAGE: 208Y/120V - 3 Ph - 4 Wire / BUS RATING(A): 150	MAIN(A): 150 / SCCR(KA): 14 / AVAILABLE FAULT(A): 3683 / MOUNTING: Flush	ENCLOSURE: NEMA 1 / NOTES:

NOTES	DESCRIPTION	DEMAND CATEGORY	VA	BKR A/P	CIRCUIT #	PHASE	CIRCUIT #	BKR A/P	VA	DEMAND CATEGORY	DESCRIPTION	NOTES
	CR C209 RECEPTACLES	Receptacles	720	20/1	1	A	2	20/1	900	Receptacles	CR C211 RECEPTACLES	
	CR C209 SHADES	Receptacles	300	20/1	3	B	4	20/1	300	Receptacles	CR C211 SHADES	
	CR C209 RECEPTACLES	Receptacles	720	20/1	5	C	6	20/1	720	Receptacles	CR C211 RECEPTACLES	
	CR C209 TABLET RCPTS	Receptacles	360	20/1	7	A	8	20/1	360	Receptacles	CR C211 TABLET RCPTS	
	CR C209 TABLET RCPTS	Receptacles	360	20/1	9	B	10	20/1	360	Receptacles	CR C211 TABLET RCPTS	
	CR C209 PROJ/SINK RCPTS	Receptacles	540	20/1	11	C	12	20/1	540	Receptacles	CR C211 PROJ/SINK RCPTS	
	CR C207 RECEPTACLES	Receptacles	720	20/1	13	A	14	20/1	720	Receptacles	CR C212 RECEPTACLES	
	CR C207 SHADES	Receptacles	300	20/1	15	B	16	20/1	300	Receptacles	CR C212 SHADES	
	CR C207 RECEPTACLES	Receptacles	720	20/1	17	C	18	20/1	720	Receptacles	CR C212 RECEPTACLES	
	CR C207 TABLET RCPTS	Receptacles	360	20/1	19	A	20	20/1	360	Receptacles	CR C212 TABLET RCPTS	
	CR C207 TABLET RCPTS	Receptacles	360	20/1	21	B	22	20/1	360	Receptacles	CR C212 TABLET RCPTS	
	CR C207 PROJ/SINK RCPTS	Receptacles	540	20/1	23	C	24	20/1	540	Receptacles	CR C212 PROJ/SINK RCPTS	
	HALLWAY C210/C206/C200	Receptacles	540	20/1	25	A	26	20/1	720	Receptacles	CR C213 RECEPTACLES	
	HALLWAY C210/C200 RCPTS	Receptacles	360	20/1	27	B	28	20/1	300	Receptacles	CR C213 SHADES	
	C203/C202/C201 RCPTS	Receptacles	360	20/1	29	C	30	20/1	720	Receptacles	CR C213 RECEPTACLES	
	C204 HAND DRYER	Equipment	1400	20/1	31	A	32	20/1	360	Receptacles	CR C213 TABLET RCPTS	
	C204 HAND DRYER	Equipment	1400	20/1	33	B	34	20/1	360	Receptacles	CR C213 TABLET RCPTS	
	C205 HAND DRYER	Equipment	1400	20/1	35	C	36	20/1	540	Receptacles	CR C213 PROJ/SINK RCPTS	
	C205 HAND DRYER	Equipment	1400	20/1	37	A	38	20/1	0		SPARE	
	C202 HAND DRYER	Equipment	1400	30/1	39	B	40	20/1	0		SPARE	
	C203 HAND DRYER	Equipment	1400	20/1	41	C	42	20/1	360	Equipment	TP-08 / TP-09	
	CR 207 TV/AV EQUIP RCPTS	Receptacles	360	20/1	43	A	44	20/1	0		SPARE	
	CR 209 TV/AV EQUIP RCPTS	Receptacles	360	20/1	45	B	46	20/1	0		SPARE	
	CR 211 TV/AV EQUIP RCPTS	Receptacles	360	20/1	47	C	48	20/1	0		SPARE	
	CR 212 TV/AV EQUIP RCPTS	Receptacles	360	20/1	49	A	50	20/1	0		SPARE	
	CR 213 TV/AV EQUIP RCPTS	Receptacles	360	30/1	51	B	52	30/1	0		SPARE	
	MECH LOFT C300	Receptacles	360	20/1	53	C	54	20/1	0		SPARE	
	MECH LOFT C300	Receptacles	360	20/1	55	A	56	20/1	0		SPARE	
	SPARE		0	20/1	57	B	58	20/1	0		SPARE	
	SPARE		0	20/1	59	C	60	20/1	0		SPARE	
	SPARE		0	20/1	61	A	62	20/1	0		SPARE	
	SPARE		0	30/1	63	B	64	30/1	0		SPARE	
	SPARE		0	20/1	65	C	66	20/1	0		SPARE	
	SPARE		0	20/1	67	A	68	20/1	0		SPARE	
	SPARE		0	20/1	69	B	70	20/1	0		SPARE	
	SPARE		0	20/1	71	C	72	20/1	0		SPARE	
	SPARE		0	20/1	73	A	74	20/1	0		SPARE	
	SPARE		0	20/1	75	B	76	20/1	0		SPARE	
	SPARE		0	20/1	77	C	78	20/1	0		SPARE	
	SPARE		0	20/1	79	A	80	20/1	0		SPARE	
	SPARE		0	30/1	81	B	82	30/1	0		SPARE	
	SPARE		0	20/1	83	C	84	20/1	0		SPARE	

DEMAND CATEGORY	Aph(VA)	Bph(VA)	Cph(VA)	TOTAL
Receptacles	5267	3857	5356	14480
Equipment	2800	2800	3160	8760
DESIGN LOAD:	8067	6656	8516	23240

TOTAL CONNECTED LOAD	VA:	27720
	AMPS:	87.8
TOTAL DESIGN LOAD	VA:	23240
	AMPS:	70.9

2K1	22A1
MDF	22B1
IDF-1	22C1
IDF-2	

PIVOT ARCHITECTURE

REGISTERED PROFESSIONAL ENGINEER — STEPHEN J. JURINA — OREGON — JULY 16, 1982 — EXPIRES: 6-30-16 — 10-23-14

PAE Portland | San Francisco | Seattle pae-engineers.com

HOWARD RECONCILED SET
EUGENE SCHOOL DISTRICT
700 HOWARD AVE, EUGENE, OREGON 97404
HOWARD ELEMENTARY SCHOOL

PANEL SCHEDULES

PROJECT #	1306	REVISIONS
ISSUE DATE:	10/28/2014	
DRAWN:	AMT	
CHECKED:	SJT	

E607

PRINTED ON: 10/23/2014 3:15:53 PM FROM FILE: C:\Revit Local Files\13-1532_HES MEP14\13-1532_HES MEP14_stacy.hansen.rvt

© 2014 PIVOT ARCHITECTURE

MECHANICAL EQUIPMENT CONNECTION SCHEDULE

EQUIPMENT DESCRIPTIONS			ELECTRICAL CHARACTERISTICS							CONNECTION CHARACTERISTICS				FEEDER CHARACTERISTICS			PANEL INFORMATION	NOTES
TAG	DESCRIPTION	LOCATION	KW	HP	FLA	MCA	MOCP	VOLTS	PHASE	VFD	1-POINT CONNECT	STARTER DIVISION	DISCONNECT DIVISION	CONDUIT DIA (INCH)	PHASE CONDUCTORS	GROUND CONDUCTOR	PANEL NAME	
DDC PANEL	CONTROL PANEL	BOILER ROOM						120	1	NO	YES	23	23	3/4"	2#12	1#12	21D1	
AH-B130	AIR HANDLING UNIT	MECH B300		1.34	1.7	2.0	15	460	3	NO	YES	23	23	3/4"	4#12	1#12	4LB1	
AH-B129	AIR HANDLING UNIT	MECH B300		1.34	1.7	2.0	15	460	3	NO	YES	23	23	3/4"	4#12	1#12	4LB1	
AH-B131	AIR HANDLING UNIT	MECH B300		1.34	1.7	2.0	15	460	3	NO	YES	23	23	3/4"	4#12	1#12	4LB1	
AH-B127	AIR HANDLING UNIT	MECH B300		1.34	1.7	2.0	15	460	3	NO	YES	23	23	3/4"	4#12	1#12	4LB1	
AH-B126	AIR HANDLING UNIT	MECH B300		1.34	1.7	2.0	15	460	3	NO	YES	23	23	3/4"	4#12	1#12	4LB1	
AH-B125	AIR HANDLING UNIT	MECH B300		1.34	1.7	2.0	15	460	3	NO	YES	23	23	3/4"	4#12	1#12	4LB1	
AH-ADMIN	AIR HANDLING UNIT	MECH A201		(2) 2.3	2.6	6.0	15	460	3	NO	YES	23	23	3/4"	4#12	1#12	42B1	1
AH-A102	AIR HANDLING UNIT	MECH A201		1.34	1.7	2.0	15	460	3	NO	YES	23	23	3/4"	4#12	1#12	42B1	
AH-MEDIA	AIR HANDLING UNIT	MECH A201		10.00	14.0	17.0	20	460	3	YES	YES	23	23	1"	4#10	1#10	42B1	1
AH-B150	AIR HANDLING UNIT	MECH B301		1.34	1.7	2.0	15	460	3	NO	YES	23	23	3/4"	4#12	1#12	4LB2	
AH-B144	AIR HANDLING UNIT	MECH B301		1.34	1.7	2.0	15	460	3	NO	YES	23	23	3/4"	4#12	1#12	4LB2	
AH-B145	AIR HANDLING UNIT	MECH B301		1.34	1.7	2.0	15	460	3	NO	YES	23	23	3/4"	4#12	1#12	4LB2	
AH-B146	AIR HANDLING UNIT	MECH B301		1.34	1.7	2.0	15	460	3	NO	YES	23	23	3/4"	4#12	1#12	4LB2	
AH-B148	AIR HANDLING UNIT	MECH B301		1.34	1.7	2.0	15	460	3	NO	YES	23	23	3/4"	4#12	1#12	4LB2	
AH-B149	AIR HANDLING UNIT	MECH B301		1.34	1.7	2.0	15	460	3	NO	YES	23	23	3/4"	4#12	1#12	4LB2	
AH-C107	AIR HANDLING UNIT	MECH C300		1.34	1.7	2.0	15	460	3	NO	YES	23	23	3/4"	4#12	1#12	4LC1	
AH-C113	AIR HANDLING UNIT	MECH C300		1.34	1.7	2.0	15	460	3	NO	YES	23	23	3/4"	4#12	1#12	4LC1	
AH-C112	AIR HANDLING UNIT	MECH C300		1.34	1.7	2.0	15	460	3	NO	YES	23	23	3/4"	4#12	1#12	4LC1	
AH-C111	AIR HANDLING UNIT	MECH C300		1.34	1.7	2.0	15	460	3	NO	YES	23	23	3/4"	4#12	1#12	4LC1	
AH-C109	AIR HANDLING UNIT	MECH C300		1.34	1.7	2.0	15	460	3	NO	YES	23	23	3/4"	4#12	1#12	4LC1	
AH-C108	AIR HANDLING UNIT	MECH C300		1.34	1.7	2.0	15	460	3	NO	YES	23	23	3/4"	4#12	1#12	4LC1	
AH-CAFÉ	AIR HANDLING UNIT	MECH A200		5.00	8.3	19.0	20	460	3	YES	YES	23	23	3/4"	4#12	1#12	4LA1	1
AH-KITCH	AIR HANDLING UNIT	MECH A200		1.34	1.7	2.0	15	460	3	NO	YES	23	23	3/4"	4#12	1#12	4LA1	
AH-BLDG	AIR HANDLING UNIT	MECH A200		1.34	1.7	2.0	15	460	3	NO	YES	23	23	3/4"	4#12	1#12	4LA1	
AH-STAGE	AIR HANDLING UNIT	MECH A200		1.34	1.7	2.0	15	460	3	NO	YES	23	23	3/4"	4#12	1#12	4LA1	
AH-GYM	AIR HANDLING UNIT	MECH A200		15.00	21.0	26.0	30	460	3	YES	YES	23	23	1"	4#8	1#8	4LA1	
AH-B231	AIR HANDLING UNIT	MECH B300		1.34	1.7	2.0	15	460	3	NO	YES	23	23	3/4"	4#12	1#12	4LB1	
AH-B230	AIR HANDLING UNIT	MECH B300		1.34	1.7	2.0	15	460	3	NO	YES	23	23	3/4"	4#12	1#12	4LB1	
AH-B229	AIR HANDLING UNIT	MECH B300		1.34	1.7	2.0	15	460	3	NO	YES	23	23	3/4"	4#12	1#12	4LB1	
AH-B227	AIR HANDLING UNIT	MECH B300		1.34	1.7	2.0	15	460	3	NO	YES	23	23	3/4"	4#12	1#12	4LB1	
AH-B226	AIR HANDLING UNIT	MECH B300		1.34	1.7	2.0	15	460	3	NO	YES	23	23	3/4"	4#12	1#12	4LB1	
AH-B225	AIR HANDLING UNIT	MECH B300		1.34	1.7	2.0	15	460	3	NO	YES	23	23	3/4"	4#12	1#12	4LB1	
AH-C207	AIR HANDLING UNIT	MECH C300		1.34	1.7	2.0	15	460	3	NO	YES	23	23	3/4"	4#12	1#12	4LC1	
AH-C208	AIR HANDLING UNIT	MECH C300		1.34	1.7	2.0	15	460	3	NO	YES	23	23	3/4"	4#12	1#12	4LC1	
AH-C209	AIR HANDLING UNIT	MECH C300		1.34	1.7	2.0	15	460	3	NO	YES	23	23	3/4"	4#12	1#12	4LC1	
AH-C211	AIR HANDLING UNIT	MECH C300		1.34	1.7	2.0	15	460	3	NO	YES	23	23	3/4"	4#12	1#12	4LC1	
AH-C212	AIR HANDLING UNIT	MECH C300		1.34	1.7	2.0	15	460	3	NO	YES	23	23	3/4"	4#12	1#12	4LC1	
AH-C213	AIR HANDLING UNIT	MECH C300		1.34	1.7	2.0	15	460	3	NO	YES	23	23	3/4"	4#12	1#12	4LC1	
AH-B250	AIR HANDLING UNIT	MECH B301		1.34	1.7	2.0	15	460	3	NO	YES	23	23	3/4"	4#12	1#12	4LB2	
AH-B249	AIR HANDLING UNIT	MECH B301		1.34	1.7	2.0	15	460	3	NO	YES	23	23	3/4"	4#12	1#12	4LB2	
AH-B248	AIR HANDLING UNIT	MECH B301		1.34	1.7	2.0	15	460	3	NO	YES	23	23	3/4"	4#12	1#12	4LB2	
AH-B246	AIR HANDLING UNIT	MECH B301		1.34	1.7	2.0	15	460	3	NO	YES	23	23	3/4"	4#12	1#12	4LB2	
AH-B245	AIR HANDLING UNIT	MECH B301		1.34	1.7	2.0	15	460	3	NO	YES	23	23	3/4"	4#12	1#12	4LB2	
AH-B244	AIR HANDLING UNIT	MECH B301		1.34	1.7	2.0	15	460	3	NO	YES	23	23	3/4"	2#12	1#12	21B1	
AH-OFCS	AIR HANDLING UNIT	MEDIA CENTER			4.0		20	208	1	NO	YES	23	23					
FCU-MDF	FAN COIL UNIT	MDF B120			4.3	5.4	15	208	1	NO	YES	23	23	3/4"	2#12	1#12	MDF	
FCU-C-IDF	FAN COIL UNIT	IDF C101			4.3	5.4	15	208	1	NO	YES	23	23	3/4"	2#12	1#12	IDF-2	
FCU-B-IDF	FAN COIL UNIT	IDF B238			4.3	5.4	15	208	1	NO	YES	23	23	3/4"	2#12	1#12	IDF-1	
FCU-ELEC	FAN COIL UNIT	ELEC A118			4.3	5.4	15	208	1	NO	YES	23	23	3/4"	2#12	1#12	MDF	
ACCU-MDF	CONDENSING UNIT	MECH B300			1.2 (FAN)	22.1	35	208	1	NO	YES	23	23	3/4"	2#10	1#10	MDF	2
ACCU-B-IDF	CONDENSING UNIT	MECH B301			0.7 (FAN)	13.6	20	208	1	NO	YES	23	23	3/4"	2#10	1#10	MDF	3
ACCU-C-IDF	CONDENSING UNIT	MECH C300			0.7 (FAN)	13.6	20	208	1	NO	YES	23	23	3/4"	2#10	1#10	MDF	3
ACCU-ELEC	CONDENSING UNIT	MECH A200			0.7 (FAN)	13.6	20	208	1	NO	YES	23	23	3/4"	2#10	1#10	MDF	

GENERAL NOTES:

A. REFER TO ONE-LINE DIAGRAM OR PANEL SCHEDULES FOR OVERCURRENT PROTECTION CHARACTERISTICS AND CIRCUIT NUMBERS.
B. COORDINATE ALL EQUIPMENT CONNECTION REQUIREMENTS WITH INSTALLING CONTRACTOR PRIOR TO THE INSTALLATION OF ANY ELECTRICAL WORK.
C. VFD'S ARE FURNISHED BY DIVISION 23. INSTALL VFD AND PROVIDE PROVIDE LINE AND LOAD SIDE FEEDERS IN ELECTRICAL WORK.
D. COMBINATION STARTER/DISCONNECTS AND DISCONNECT SWITCHES SHALL BE LOCATED WITHIN SIGHT OF AND ADJACENT TO EQUIPMENT SERVED. COORDINATE INSTALLATION WITH EQUIPMENT INSTALLER.
E. NOT ALL EQUIPMENT IDENTIFIED HERE IS SHOWN ON FLOOR PLANS. REFER TO DRAWINGS IN OTHER DISCIPLINES FOR EQUIPMENT LOCATIONS.

NOTES:

1. SMOKE DETECTION AND FAN SHUT DOWN REQUIRED.
2. COMPRESSOR RLA - 12.8, COMPRESSOR LRA = 64
3. COMPRESSOR RLA - 13.5, COMPRESSOR LRA = 58.3

1 MECHANICAL EQUIPMENT COORDINATION SCHEDULE (1 OF 2)
NONE

PRINTED ON: 10/23/2014 3:15:55 PM FROM FILE: C:\Revit Local Files\13-1532_HES MEP\4\13-1532_HES MEP14_stacy.hansen.rvt

PIVOT ARCHITECTURE

REGISTERED PROFESSIONAL ENGINEER 11612 OREGON JAN 16, 1986 STEPHEN J. TURNA
10-23-14
EXPIRES: 6-30-16

PAE
Portland | San Francisco | Seattle
pae-engineers.com

HOWARD RECONCILED SET
EUGENE SCHOOL DISTRICT
700 HOWARD AVE, EUGENE, OREGON 97404
HOWARD ELEMENTARY SCHOOL

SCHEDULES - ELECTRICAL

PROJECT #	1306
ISSUE DATE:	10/28/2014
DRAWN:	AMT
CHECKED:	SJT
REVISIONS	

E701

© 2014 PIVOT ARCHITECTURE

MECHANICAL EQUIPMENT CONNECTION SCHEDULE

EQUIPMENT DESCRIPTIONS			ELECTRICAL CHARACTERISTICS							CONNECTION CHARACTERISTICS				FEEDER CHARACTERISTICS			PANEL INFORMATION	NOTES
TAG	DESCRIPTION	LOCATION	KW	HP	FLA	MCA	MOCP	VOLTS	PHASE	VFD	1-POINT CONNECT	STARTER DIVISION	DISCONNECT DIVISION	CONDUIT DIA (INCH)	PHASE CONDUCTORS	GROUND CONDUCTOR	PANEL NAME	
ACC-1	CHILLER	UTILITY COURT			28.8 (FANS)	307.0	350	460	3	NO	YES	23	26				MDP	RLA=267
	- CONTROL PANEL																	
	-HEATER																	
	- REFIRGERANT MONITORING PANEL																	
B-1	BOILER	BOILER ROOM			7.3		20	120	1	NO	YES	23	26	3/4"	2#10	1#10	21D1	1
	- BOILER CONTROL PANEL																	
	- BOILER EMERGENCY POWER OFF																	
B-2	BOILER	BOILER ROOM			7.3		20	120	1	NO	YES	23	26	3/4"	2#10	1#10	21D1	1
	- BOILER CONTROL PANEL																	
	- BOILER EMERGENCY POWER OFF																	
HCP-1	HEATING/CHILLED WATER	BOILER ROOM		7.50	11.0		20	460	3	YES	YES	23	26	3/4"	4#10	1#10	41D1	
HCP-2	HEATING/CHILLED WATER	BOILER ROOM		7.50	11.0		20	460	3	YES	YES	23	26	3/4"	4#10	1#10	41D1	
RHP-INJ	HEATING WATER	MECH A200	.7	1/4	5.8		20	120	1	NO	YES	23	26	3/4"	2#12	1#12	21D1	
RHP-ZN	HEATING WATER	MECH A200	.7	1/4	5.8		20	120	1	NO	YES	23	26	3/4"	2#12	1#12	21D1	
EF-B300	RESTROOM EXHAUST FAN	MECHANICAL ROOM B300		1	2.1		20	460	3	NO	YES	23	26	3/4"	4#12	1#12	4LB1	4
EF-B301	RESTROOM EXHAUST FAN	MECHANICAL ROOM B301		3/4	1.6		20	460	3	NO	YES	23	26	3/4"	4#12	1#12	4LB2	4
EF-C300	RESTROOM EXHAUST FAN	MECHANICAL ROOM C300		3/4	1.6		20	460	3	NO	YES	23	26	3/4"	4#12	1#12	4LC1	4
EF-A200	RESTROOM EXHAUST FAN	MECHANICAL ROOM A200		1/4	5.8		20	115	1	NO	YES	23	26	3/4"	2#12	1#12	21D1	4
EF-GREASE	GREASE EXHAUST FAN	MECHANICAL ROOM A200		1/2	9.8		20	115	1	NO	YES	23	26	3/4"	2#10	1#10	21D1	
EF-DISH	DISHWASHER HOOD EXHAUST	MECHANICAL ROOM A200		1/4	5.8		20	115	1	NO	YES	23	26	3/4"	2#12	1#12	21D1	4
EF-ADMIN	ADMIN RELIEF FAN	ROOF ABOVE ADMIN LOFT		1-1/2	3.0		20	460	3	NO	YES	23	26	3/4"	4#12	1#12	42B1	4
EF-CUST	CUSTODIAL EXHAUST FAN	A104C		1/4	5.8		20	115	1	NO	YES	23	26	3/4"	2#12	1#12	2K1	4
EF-TLT	ADMIN TOILET EXHAUST FAN	ROOF		1/4	5.8		20	115	1	NO	YES	23	26	3/4"	2#12	1#12	22A1	4
EF-CIDF	C-IDF EXHAUST FAN	C-IDF		.38	7.2		20	115	1	NO	YES	23	26	3/4"	2#10	1#10	IDF-2	
EF-BIDF	B-IDF EXHAUST FAN	B-IDF		.38	7.2		20	115	1	NO	YES	23	26	3/4"	2#10	1#10	IDF-1	
EF-MDF	MDF EXHAUST FAN	MDF		1.1	9.8		20	115	1	NO	YES	23	26	3/4"	2#8	1#8	MDF	
TP-01	ELECTRONIC TRAP PRIMING MANIFOLD	BOYS RESTROOM A109					20	120	1	NO	YES	23	26	3/4"	2#12	1#12	21D1	
TP-02	ELECTRONIC TRAP PRIMING MANIFOLD	KITCHEN A104					20	120	1	NO	YES	23	26	3/4"	2#12	1#12	2K1	
TP-03	ELECTRONIC TRAP PRIMING MANIFOLD	BOYS RESTROOM C109					20	120	1	NO	YES	23	26	3/4"	2#12	1#12	21C1	
TP-04	ELECTRONIC TRAP PRIMING MANIFOLD	BOYS RESTROOM B141					20	120	1	NO	YES	23	26	3/4"	2#12	1#12	21B1	
TP-05	ELECTRONIC TRAP PRIMING MANIFOLD	STAFF ROOM B103					20	120	1	NO	YES	23	26	3/4"	2#12	1#12	21A2	
TP-06	ELECTRONIC TRAP PRIMING MANIFOLD	BOYS RESTROOM B222					20	120	1	NO	YES	23	26	3/4"	2#12	1#12	22A1	
TP-07	ELECTRONIC TRAP PRIMING MANIFOLD	BOYS RESTROOM B241					20	120	1	NO	YES	23	26	3/4"	2#12	1#12	22B1	
TP-08	ELECTRONIC TRAP PRIMING MANIFOLD	BOYS RESTROOM C205					20	120	1	NO	YES	23	26	3/4"	2#12	1#12	22C1	
TP-9	ELECTRONIC TRAP PRIMING MANIFOLD	STAFF TOILET C203					20	120	1	NO	YES	23	26	3/4"	2#12	1#12	22C1	
TP-10	ELECTRONIC TRAP PRIMING MANIFOLD	STAFF TOILET B240					20	120	1	NO	YES	23	26	3/4"	2#12	1#12	22B1	
TP-11	ELECTRONIC TRAP PRIMING MANIFOLD	BOILER ROOM A119					20	120	1	NO	YES	23	26	3/4"	2#12	1#12	21D1	
GWH-101 (GWH-1)	GAS WATER HEATER	BOILER ROOM					20	120	1	NO	YES	23	26	3/4"	2#12	1#12	21D1	
GWH-102 (GWH-2)	GAS WATER HEATER	BOILER ROOM					20	120	1	NO	YES	23	26	3/4"	2#12	1#12	21D1	
SV-1	GAS SOLENOID VALVE									NO	YES	23	23	1"	LV			2
SV-2	GAS SOLENOID VALVE									NO	YES	23	23	1"	LV			2
RHWP-101	RECIRCULATING WATER PUMP	BOILER ROOM		1/6	4.4		20	120	1	NO	YES	26	26	3/4"	2#12	1#12	21D1	
RHTWP-101	RECIRCULATING WATER PUMP HTW	BOILER ROOM		1/12	2.2		20	120	1	NO	YES	26	26	3/4"	2#12	1#12	21D1	
RWTS-101	RAINWATER TREATMENT SKID	BOILER ROOM		5.00	13.4		20	480	3	NO	YES	23	23	3/4"	4#10	1#10	41D1	
RWSP-101	RAINWATER SUMP PUMP	RAIN WATER CISTERN (SITE)		1/2	9.8		20	120	1	NO	YES	23	23	3/4"	2#10	1#10	RWTS-101	
SP-1	SUMP PUMP	ELEVATOR PIT		1/2	9.8		20	120	1	NO	YES	23	23	3/4"	2#10	1#10	21A2	
HEAT TRACE	HEAT TRACE	CHILLER						208	1	NO	YES	23	23	3/4"	2#12	1#12	21SBK1	
WELL PUMP	IRRIGATION WELL PUMP	YARD	11.7	10	14.0		20	480	3	NO	YES	23	26	1"	4#10	1#10	41D1	3
WELL CTRL	IRRIGATION WELL PUMP CONTROLLER	BOILER ROOM	.5					120	1	NO	YES	23	23	3/4"	2#12	1#12	21D1	
SWOP-1	STORMWATER OVERFLOW PUMP	MAN-HOLE(SITE)	11.7	10	14.0		20	480	3	NO	YES	23	26	1"	4#10	1#10	41D1	5

GENERAL NOTES:

A. REFER TO ONE-LINE DIAGRAM OR PANEL SCHEDULES FOR OVERCURRENT PROTECTION CHARACTERISTICS AND CIRCUIT NUMBERS.
B. COORDINATE ALL EQUIPMENT CONNECTION REQUIREMENTS WITH INSTALLING CONTRACTOR PRIOR TO THE INSTALLATION OF ANY ELECTRICAL WORK.
C. VFD'S ARE FURNISHED BY DIVISION 23. INSTALL VFD AND PROVIDE PROVIDE LINE AND LOAD SIDE FEEDERS IN ELECTRICAL WORK.
D. COMBINATION STARTER/DISCONNECTS AND DISCONNECT SWITCHES SHALL BE LOCATED WITHIN SIGHT OF AND ADJACENT TO EQUIPMENT SERVED. COORDINATE INSTALLATION WITH EQUIPMENT INSTALLER.
E. NOT ALL EQUIPMENT IDENTIFIED HERE IS SHOWN ON FLOOR PLANS. REFER TO DRAWINGS IN OTHER DISCIPLINES FOR EQUIPMENT LOCATIONS.

NOTES:

1. ELECTRICAL CONTRACTOR TO PROVIDE EPO BUTTONS FOR BOILERS. REFER TO MECHANICAL DRAWINGS FOR EXACT LOCATIONS.
2. ELECTRICAL CONTRACTOR TO PROVIDE RACEWAY BETWEEN PUSH BUTTON AND VALVES FOR LV CONTROL. REFER TO PLUMBING DRAWINGS FOR EXACT LOCATIONS
3. PROVIDE ADDITIONAL (1) - 1"C SPARE AND (1) - 1"C FOR CONTROL CIRCUITRY BETWEEN WELL PUMP AND WELL PUMP CONTROLLER. VERIFY CIRCUITRY WITH SYSTEM PROVIDER.
4. PROVIDE CONNECTION TO ASSOCIATED MOTORIZED DAMPER FROM THE EXHAUST FAN CIRCUIT.
5. ELECTRICAL CONTRACTOR TO PROVIDE CONNECTION TO STORMWATER OVERFLOW CONTROLLER LOCATED IN BOILER ROOM A119. ALSO PROVIDE (1) 2"C FROM CONTROLLER TO STORMWATER PUMP ON SITE. PLUMBING CONTRACTOR TO PROVIDE CONDUCTORS FROM CONTROLLER TO PUMP.

1 MECHANICAL EQUIPMENT COORDINATION SCHEDULE (2 OF 2)

NONE

PIVOT ARCHITECTURE

REGISTERED PROFESSIONAL ENGINEER — OREGON — JAN 16, 1987 — STEPHEN J. TURNA — EXPIRES: 6-30-16 — 10-23-14

PAE — Portland | San Francisco | Seattle — pae-engineers.com

HOWARD RECONCILED SET
EUGENE SCHOOL DISTRICT 4J
700 HOWARD AVE, EUGENE, OREGON 97404
HOWARD ELEMENTARY SCHOOL

SCHEDULES - ELECTRICAL

PROJECT #:	1.536
ISSUE DATE:	10/28/2014
DRAWN:	AMT
CHECKED:	SJT
REVISIONS:	

E702

PRINTED ON: 10/23/2014 3:15:56 PM FROM FILE: C:\Revit Local Files\13-1532_HES MEP\4\13-1532_HES MEP\4_stacy.hansen.rvt

© 2014 PIVOT ARCHITECTURE

LIGHTING RELAY SCHEDULE

LOAD INFORMATION				POWER PANEL INFORMATION			INPUT CONTROLLING DEVICES						NOTES
LIGHTING RELAY DESIGNATION	RELAY	LOAD (VA)	DESCRIPTION	PANEL	CIRCUIT	EMERGENCY SOURCE	LV SWITCHED	LV SWITCH(S) CONTROLLING RELAY	CARD SWIPE	PHOTO CELL	TIMECLOCK	OCCUPANCY SENSOR	
SNA1	rsa01	540	LTG - PARKING POLE LIGHTS	41D1	2	N	N	--------	N	Y	Y	N	1
SNA1	rsa02	540	LTG - PARKING POLE LIGHTS	41D1	2	N	N	--------	N	Y	Y	N	1
SNA1	rsa03	400	LTG - PARKING LIGHT COLUMN	41D1	2	N	N	--------	N	Y	Y	N	1
SNA1	rsa04	1000	LTG - PARKING MONUMENT SIGN	41D1	4	N	N	--------	N	Y	Y	N	1
SNA2	rsa05	144	LTG - PARKING BOLLARDS	41D1	6	N	N	--------	N	Y	Y	N	1
SNA2	rsa06	260	LTG - PLAYGROUND LIGHT COLUMN / FLAG POLE	41D1	6	N	N	--------	N	Y	Y	N	1
SNA2	rsa07												
SNA2	rsa08	390	LTG - COVERED PLAY AREA	41D1	6	N	Y	sa6	N	Y	Y	N	1
1NA1	ra111	844	LTG - KITCHEN A104	41D1	8	N	Y	sa1	N	N	Y	N	1
1NA1	ra112	390	LTG - LOBBY A101	41D1	8	N	N	--------	N	N	Y	N	1
1NA1	ra113	621	LTG - EXTERIOR CANOPY	41D1	8	N	N	--------	Y	Y	Y	N	1
1NA1	ra114	480	LTG - W. KITCHEN CANOPY	41D1	8	N	Y	sa5	N	Y	Y	N	1
1EA1	ra115	240	LTG - EXTERIOR WALL MOUNTED	41LSD1	1	Y	N	--------	Y	Y	Y	N	1
1EA1	ra116	90	LTG - LOBBY A101	41LSD1	1	Y	N	--------	Y	N	Y	N	1
1EA1	ra117	440	LTG - COURTYARD / OUTDOOR PATIO	41LSD1	1	Y	N	--------	N	Y	Y	N	1
1EA1	ra118	241	LTG - KITCHEN A104	41LSD1	1	Y	Y	sa1	Y	N	Y	N	1
1NA2	ra121	1000	LTG - GYM A111 DOWNLIGHTS	41D1	10	N	Y	sa12	N	Y	Y	N	1
1NA2	ra122	2444	LTG - GYM A111 LINEAR	41D1	12	N	Y	sa12	N	Y	Y	N	1
1NA2	ra123	1974	LTG - CAFETERIA A103	41D1	20	N	Y	sa10, sa11	N	Y	Y	N	1
1NA2	ra124			41D1		N							
1EA2	ra125	1200	LTG - GYM A111	41LSD1	3	Y	Y	sa12	Y	Y	Y	N	1
1EA2	ra126	350	LTG - CAFETERIA A103	41LSD1	3	Y	Y	sa10, sa11	Y	Y	Y	N	1
1EA2	ra127	58	LTG - EXTERIOR CANOPY	41LSD1	3	Y	N	--------	Y	Y	Y	N	1
1EA2	ra128			41LSD1		Y							
1NA3	ra131	18	LTG - MUSIC ROOM / STAGE HALLWAY	41D1	22	N	Y	sa2, sa3	N	N	Y	N	1
1NA3	ra132	506	LTG - MUSIC ROOM / STAGE A113	41D1	22	N	Y	sa4	N	N	Y	N	1
1NA3	ra133			41D1		N							
1NA3	ra134			41D1		N							
1NB1	rb111	544	LTG - HALL B124 / B128	41A1	2	N	Y	sb1, sb2	N	N	Y	N	1
1NB1	rb112	242	LTG - HALL B119	41A1	2	N	Y	sb3	N	N	Y	N	1
1NB1	rb113	346	LTG - RECEPTION B100	41A1	2	N	Y	sb4, sb5, sb6	N	N	Y	N	1
1NB1	rb114			41A1		N							
1EB1	rb115	572	LTG - HALL B100 / B119 / B124 / B128 / B128A	42LSA1	1	Y	N	--------	Y	N	Y	N	1
1EB1	rb116	192	LTG - EXTERIOR WALL MOUNTED	42LSA1	1	Y	N	--------	Y	Y	Y	N	1
1EB1	rb117			42LSA1		Y							
1EB1	rb118			42LSA1		Y							
1NB2	rb121	634	LTG - HALL B143 / B147	41C1	2	N	Y	sb7, sb8	N	N	Y	N	1
1NB2	rb122	904	LTG - HALL B137 / C100	41C1	4	N	Y	sb9, sb10, sb11, sb12	N	N	Y	N	1
1NB2	rb123			41C1		N							
1NB2	rb124			41C1		N							
1NC1	rc111	634	LTG - HALL C106 / C110 / C114	41C1	6	N	Y	sc1, sc2	N	N	Y	N	1
1NC1	rc112			41C1		N							
1NC1	rc113			41C1		N							
1NC1	rc114			41C1		N							
1EC1	rc115	782	LTG - HALL B137 / B143 / B147 / B151 / C100 / C106 / C110 / C114	42LSC1	1	Y	N	--------	Y	N	Y	N	1
1EC1	rc116			42LSC1		Y							
1EC1	rc117			42LSC1		Y							
1EC1	rc118			42LSC1		Y							
2NB1	rb211	634	LTG - HALL B224 / B228	42A1	2	N	Y	sb20	N	N	Y	N	1
2NB1	rb212	812	LTG - HALL B217 / B219 / B232	42A1	4	N	Y	sb21, sb22	N	N	Y	N	1
2NB1	rb213	1724	LTG - MEDIA B133 / B132 DOWNLIGHT	42A1	6	N	Y	sb26	N	N	Y	N	1
2NB1	rb214												
2EB1	rb215	406	LTG - B128A / B228 / B224 / B219 / B218 / B232	42LSA1	3	Y	N	--------	Y	N	Y	N	1
2EB1	rb216	1200	LTG - MEDIA B133 / B132 DOWNLIGHT	42LSA1	5	Y	Y	sb27	Y	N	Y	N	1
2EB1	rb217			42LSA1		Y							
2EB1	rb218			42LSA1		Y							
2NB2	rb221	634	LTG - B243 / B247	42C1	2	N	Y	sb23	N	N	Y	N	1
2NB2	rb222	954	LTG - C200 / B235 / B237	42C1	4	N	Y	sb24, sb25	N	N	Y	N	1
2NB2	rb223			42C1		N							
2NB2	rb224			42C1		N							
2NC1	rc211	814	LTG - HALL C206 / C210	42C1	6	N	Y	sc5	N	N	Y	N	1
2NC1	rc212			42C1		N							
2NC1	rc213			42C1		N							
2NC1	rc214			42C1		N							
2EC1	rc215	620	LTG - HALL B151 / B247 / B243 / B237 / B235 / C200 / C206 / C210 / C114	42LSC1	3	Y	Y	sc5, sb23, sb24, sb25	Y	N	Y	N	1
2EC1	rc216	72	LTG - MECH LOFT EXTERIOR	42LSC1	3	Y	Y	sc6, sc7	Y	N	Y	N	1
2EC1	rc217			42LSC1		Y							
2EC1	rc218			42LSC1		Y							

GENERAL NOTES:

A. SWITCH LOCATIONS/PLATES WITH SEVERAL GANGED TOGETHER SWITCHES SHALL BE DESIGNATED WITH THE TYPICAL SWITCH IDENTIFIER (sa) WITH A SWITCH QUANTITY ADDED TO THE END, EXAMPLE: sa-4 = A SWITCH LOCATION WITH 4 LOW VOLTAGE SWITCHES, THE FOUR SWITCHES WILL BE DESIGNATED AS sa-1, sa-2, sa-3, sa-4 ON THE SCHEDULE.

NOTES:

1. SWEEP LIGHTING ON AT 6AM, SWEEP OFF AT 11PM. USE OWNER PROVIDED SCHEDULE FOR INTEGRAL SPACES.

1 LIGHTING RELAY SCHEDULE
NONE

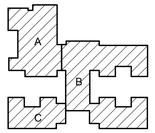

PIVOT ARCHITECTURE

REGISTERED PROFESSIONAL ENGINEER
OREGON
JAN 16, 1987
STEPHEN J. TURNA
10-23-14
EXPIRES: 6-30-16

PAE
Portland | San Francisco | Seattle
pae-engineers.com

HOWARD RECONCILED SET
EUGENE SCHOOL DISTRICT
700 HOWARD AVE, EUGENE, OREGON 97404
4J
HOWARD ELEMENTARY SCHOOL

SCHEDULES - ELECTRICAL

PROJECT #	1336
ISSUE DATE:	10/28/2014
DRAWN:	AMT
CHECKED:	SJT
REVISIONS:	

E703

PRINTED ON: 10/23/2014 3:15:58 PM FROM FILE: C:\Revit Local Files\13-1532_HES MEP\413-1532_HES MEP14_sltoy.hansen.rvt

© 2014 PIVOT ARCHITECTURE

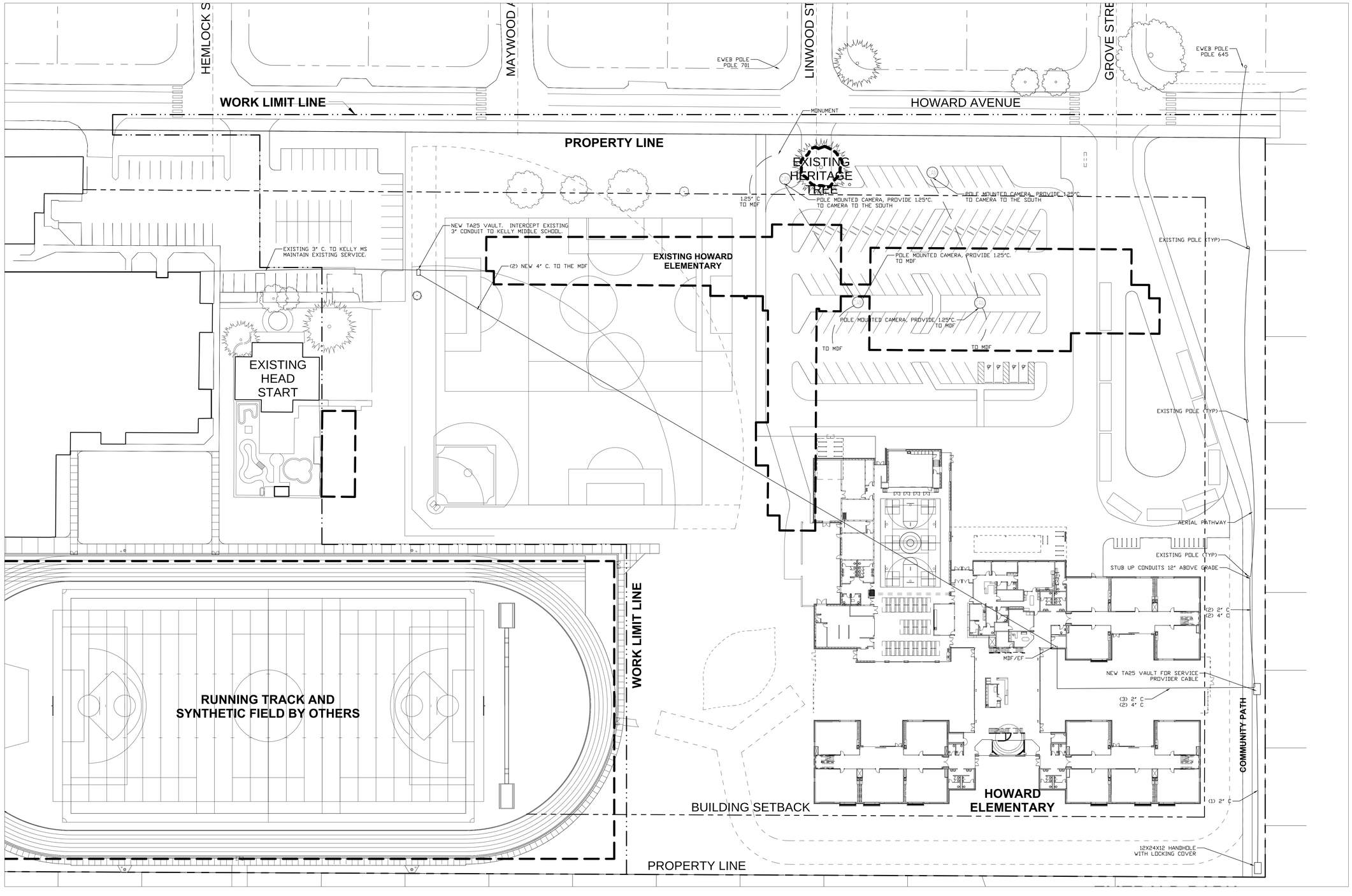

1 T110 OVERALL SITE PLAN
1/16" = 1'-0"

PIVOT ARCHITECTURE

BICSI
CAMERON D. HAVENOT
REG. NO. 141694
EXPIRES 12-31-14
SIGNATURE

NORTHWEST INFORMATION SERVICES
8285 SW NIMBUS, SUITE 125
BEAVERTON, OREGON 97008
PHONE:(503)246-8585 FAX:(503)246-8706

HOWARD RECONCILED SET

EUGENE SCHOOL DISTRICT
44 W. BROADWAY ST. EUGENE, OREGON

HOWARD ELEMENTARY SCHOOL

OVERALL SITE PLAN

PROJECT #:	1336
ISSUE DATE:	10/28/2014
DRAWN:	DDH
CHECKED:	JW
REVISIONS:	

T101

PRINTED ON: 10/22/2014 9:28:30 AM FROM FILE: H:\EUGENESCHOOLDISTRICT\HOWARD\DRAWINGS\T101.DWG

© 2014 PIVOT ARCHITECTURE

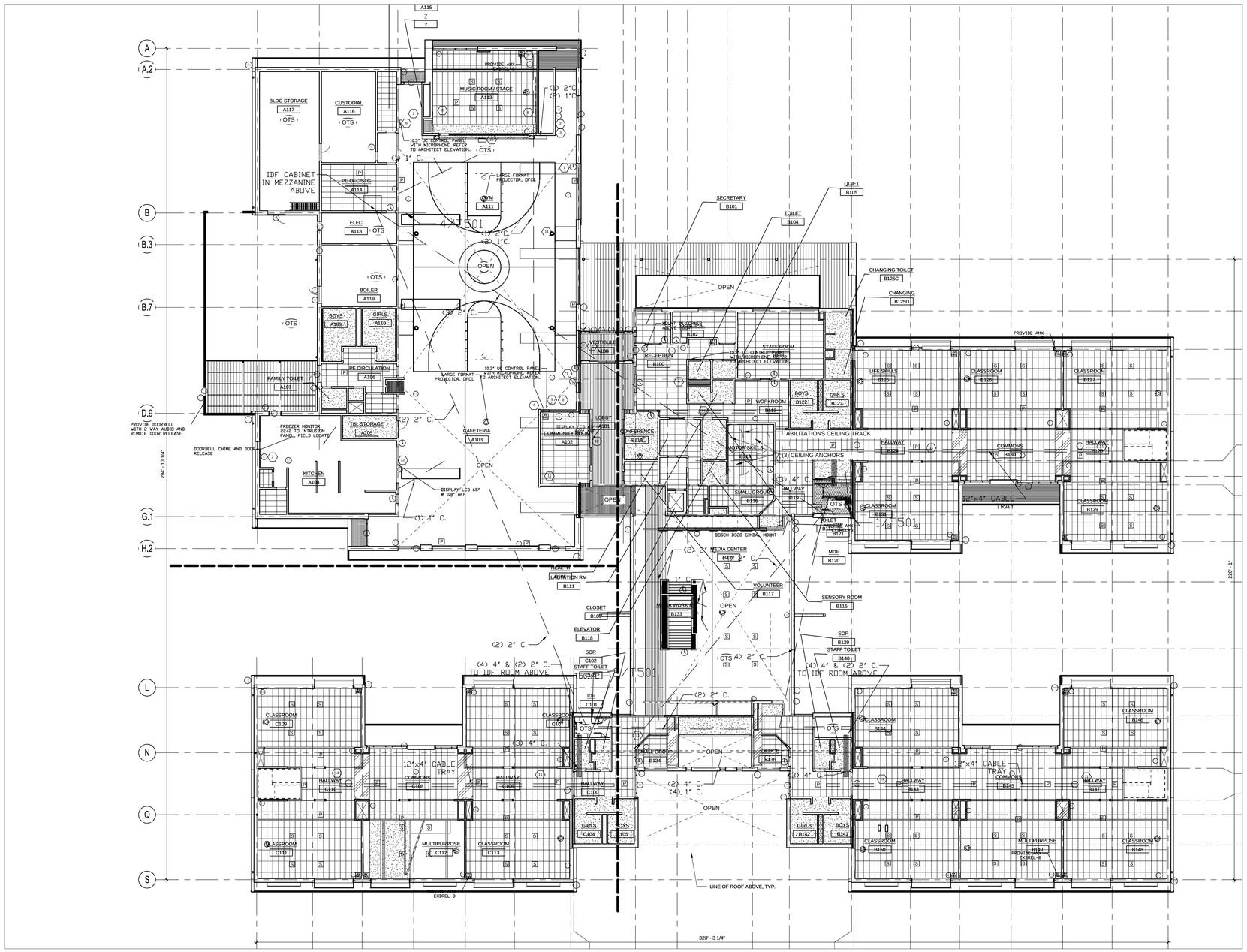

1 T110 OVERALL FIRST FLOORPLAN & RCP
1/16" = 1'-0"

PLAN SYMBOL LEGEND

- SINGLE DATA LOCATION FOR CCTV MOUNT AT 15'-0" UNLESS OTHERWISE NOTED. PROVIDE (1) CATEGORY 6A BLUE CABLE.
- DUAL DATA LOCATION. PROVIDE (2) CATEGORY 6A BLUE CABLES.
- TRIPLE DATA LOCATION, (3) CATEGORY 6A BLUE CABLES.
- PRESENTER LOCATION. PROVIDE (1) PRE-TERMINATED MINI-AUDIO, VGA VIDEO CABLE TO SHORT THROW PROJECTOR. PROVIDE (1) PRE-TERMINATED HDMI CABLE TO SHORT THROW PROJECTOR AND LCD FLAT PANEL.
- (W) WIRELESS ACCESS POINT. (2) CATEGORY 6A YELLOW CABLE. COIL 20' SLACK LOOP AT LOCATION INDICATED. TERMINATE IN 2-PORT MODULAR JACK BOX AMP # 1116697-1 OR EQUAL. CEILING MOUNTED UNLESS OTHERWISE NOTED.
- P WALL MOUNT PAGING SPEAKER PROVIDE 18AWG SHIELDED TWISTED PAIR CABLE. UP TO 10 SPEAKERS MAY BE CONNECTED IN SERIES.
- P CEILING MOUNT PAGING SPEAKER PROVIDE 18AWG SHIELDED TWISTED PAIR CABLE. UP TO 10 SPEAKERS MAY BE CONNECTED IN SERIES. REFER TO ARCHITECT REFLECTED CEILING PLAN FOR EXACT PLACEMENT.
- I CEILING MOUNT INTERCOM SPEAKER PROVIDE 1-PAIR 22AWG SHIELDED TWISTED PAIR CABLE. HOMERUN TO PAGING CALL BUTTON. REFER TO ARCHITECT REFLECTED CEILING PLAN FOR EXACT PLACEMENT.
- CB CONTROLS AND CALL BUTTON. HOMERUN CATEGORY 5E GREY CABLE TO HEADEND.
- (C) CAMERA LOCATION AT 16' AFF FOR EXTERIOR, CEILING MOUNT FOR INTERIOR
- SURFACE MOUNTED 12" ANALOG CLOCK AT 96" AFF. UNLESS OTHERWISE NOTED
- OWNER FURNISHED SHORT THROW DISPLAY. PROVIDE AND INSTALL OWNER FURNISHED PROJECTOR AND MOUNT. PROVIDE (1) CATEGORY 6A WHITE CABLE TO THE NEAREST TR. SEE TELECOM DETAILS.
- S CEILING MOUNTED VOICE RE-ENFORCEMENT SPEAKER. REFER TO ARCHITECT REFLECTED CEILING PLAN FOR EXACT PLACEMENT.
- CDV/LCD 27" WALL MOUNTED LCD. SEE T702 FOR CONNECTION RELATED TO UNIFIED CAMPUS SYSTEM, INTRUSION, ACCESS AND SOUND SYSTEM CONNECTIONS.
- AV ENCL 6x6x4 J-BOX FOR AV/PAGING/CONTROLS. PROVIDE (3) 1-1/2" CONDUITS TO ACCESSIBLE CEILING IN THIS ROOM.
- (D) DOOR CONTACT - PROVIDE 1/2" CONDUIT TO DOOR FRAME. PROVIDE 22AWG 1 PAIR CABLE TO THE SECURITY PANEL OR ZONE EXPANDER.
- (K) SECURITY KEYPAD PROVIDE 1/2" CONDUIT TO DOUBLE GANG BOX AT +44" AFF. PROVIDE 22AWG 3-PAIR TO THE SECURITY PANEL OR ZONE EXPANDER
- (M) MOTION SENSOR -PROVIDE 1/2" CONDUIT TO SINGLE GANG BOX AT +108" AFF. PROVIDE 22AWG 2-PAIR TO THE SECURITY PANEL OR ZONE EXPANDER.
- (R) CARD READER - PROVIDE 3/4" CONDUIT TO SINGLE GANG BOX AT +44" AFF. COORDINATE DEVICES PLACEMENT WITH DOOR INSTALLER AS SOME DEVICES MAY BE LOCATED ON DOOR MULLIONS. PROVIDE 22AWG 3-PAIR SHIELDED TO THE ACCESS PANEL.
- (G) GLASSBREAK SENSOR - NOT USED
- S SECURITY SYSTEM SIREN, 16/2 TO INTRUSION PANEL
- REX SECURITY SYSTEM REQUEST TO EXIT. AT ADA ENTRY OR ADJACENT TO KEYPAD, PROVIDE 22/6 TO INTRUSION PANEL

(X) KEYED NOTES:

1. PROVIDE PROTECTIVE WIRE COVER..
2. ARMING/DISARMING KEYPAD LOCATION, GREY. HID5355AGK09.
3. DOOR CONTROL KEYPAD LOCATION, WHITE. HID5355ABK09.
4. LOCK DOWN INITIATION BUTTON.
5. SOUND SYSTEM CABINET
6. GYM SOUND AND VIDEO CONTROL PANEL LOCATION. PROVIDE 12X12X4 LOCKING J-BOX
7. MULTIPURPOSE SOUND SYSTEM LOCATION PROVIDE 12X12X4 LOCKING J-BOX
8. GYM VIDEO SYSTEM CONNECTION.
9. MULTI-PURPOSE VIDEO CONNECTION.
10. 6-GANG FLOORBOX, (6) 1" C TO SOUND SYSTEM LOCATION
11. CEILING MOUNTED DAS ANTENNA LOCATION. PROVIDE COAX TO NEAREST TELECOM ROOM.
12. PROVIDE CAT 6A TO NEAREST TELECOM ROOM. INSTALL OWNER FURNISHED MOUNT AND LCD TV.

GENERAL NOTES:

1. CCTV SECURITY CAMERAS AS SHOWN CABLING AND ROUGH IN ONLY. CAMERA, HARDWARE AND SOFTWARE IS BY OTHERS.
2. CLASSROOM SOUND SYSTEMS INCLUDE A CEILING OR WALL MOUNTED INFRA RED SENSOR. PROVIDED 1 PER EQUIPPED ROOM. COORDINATE WITH ARCHITECT REFLECTED CEILING PLAN.

SHEET NOTES:

1. PROVIDE (2) 22AWG 1-PAIR CABLE FROM MOTORIZED SHADES TO CLOSEST TELECOM ROOM. COORDINATE REQUIREMENTS. THIS SHEET DOES NOT SHOW ALL TELECOM DEVICE REQUIREMENTS.

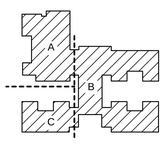

SECTOR KEY PLAN

PIVOT ARCHITECTURE

BICSI CHARMAIN D. HEINZMAN RCDD No. 1418165 EXP 10-08-14 SIGNATURE

NORTHWEST INFORMATION SERVICES
8285 SW NIMBUS, SUITE 125
BEAVERTON, OREGON 97008
PHONE:(503)246-8585 FAX:(503)246-8706

HOWARD RECONCILED SET

EUGENE SCHOOL DISTRICT
44 W. BROADWAY ST. EUGENE, OREGON

4J HOWARD ELEMENTARY SCHOOL

OVERALL 1ST FLOOR PLAN

PROJECT #	1336
ISSUE DATE:	10/28/2014
DRAWN:	DDH
CHECKED:	JW
REVISIONS:	

T110

PRINTED ON: 10/22/2014 6:28:30 AM FROM FILE: H:\EUGENESCHOOLDISTRICT\HOWARD\DRAWINGS\T110.DWG

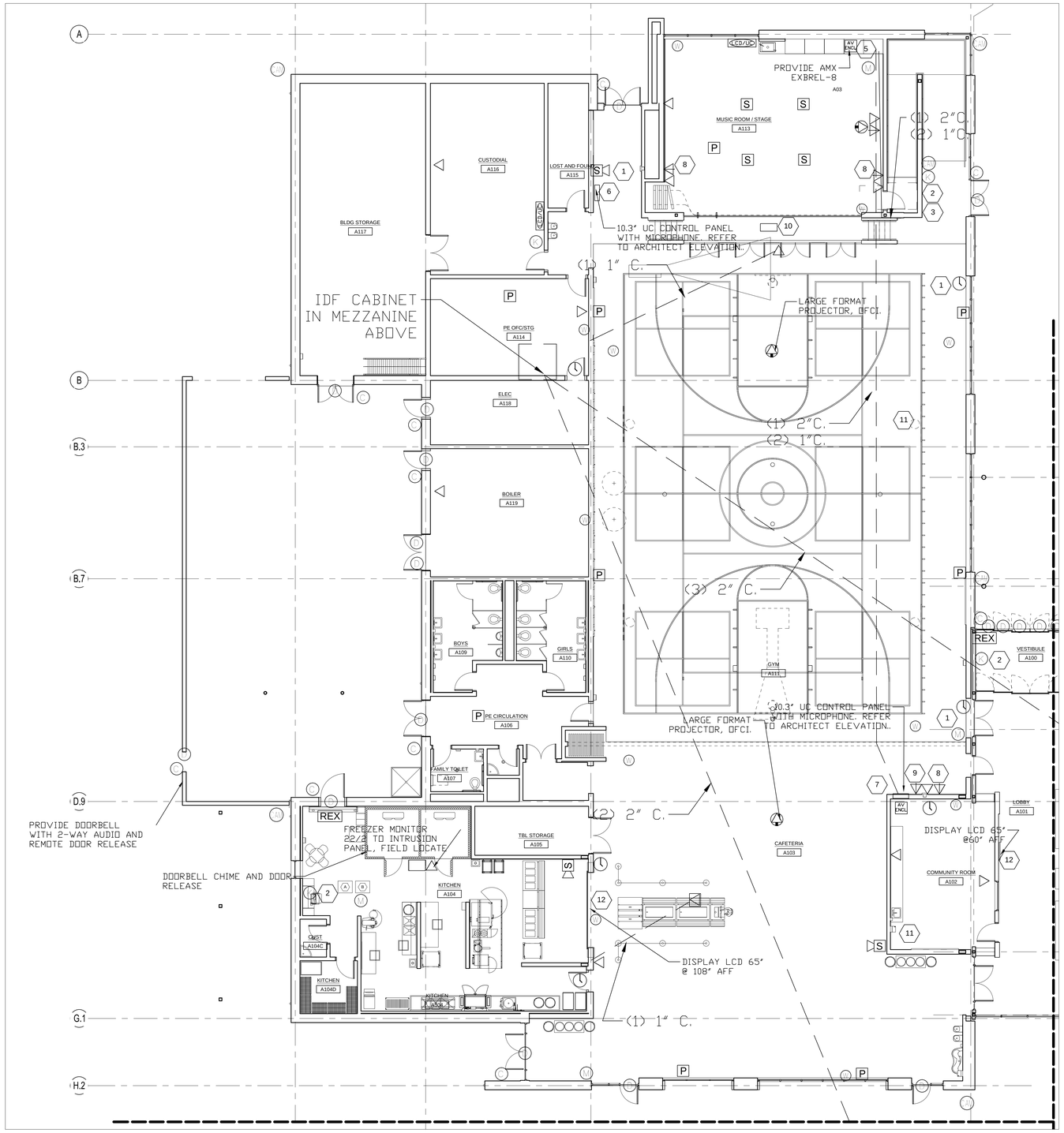

1 T111 PARTIAL FIRST FLOORPLAN – SECTOR A
1/8" = 1'-0"

PLAN SYMBOL LEGEND

- SINGLE DATA LOCATION FOR CCTV MOUNT AT 15'-0" UNLESS OTHERWISE NOTED. PROVIDE (1) CATEGORY 6A BLUE CABLE.
- DUAL DATA LOCATION. PROVIDE (2) CATEGORY 6A BLUE CABLES.
- TRIPLE DATA LOCATION, (3) CATEGORY 6A BLUE CABLES.
- PRESENTER LOCATION. PROVIDE (1) PRE-TERMINATED MINI-AUDIO, VGA VIDEO CABLE TO SHORT THROW PROJECTOR. PROVIDE (1) PRE-TERMINATED HDMI CABLE TO SHORT THROW PROJECTOR AND LCD FLAT PANEL.
- W — WIRELESS ACCESS POINT. (2) CATEGORY 6A YELLOW CABLE. COIL 20' SLACK LOOP AT LOCATION INDICATED. TERMINATE IN 2-PORT MODULAR JACK BOX AMP # 1116697-1 OR EQUAL. CEILING MOUNTED UNLESS OTHERWISE NOTED.
- P — WALL MOUNT PAGING SPEAKER PROVIDE 18AWG SHIELDED TWISTED PAIR CABLE. UP TO 10 SPEAKERS MAY BE CONNECTED IN SERIES.
- P — CEILING MOUNT PAGING SPEAKER PROVIDE 18AWG SHIELDED TWISTED PAIR CABLE. UP TO 10 SPEAKERS MAY BE CONNECTED IN SERIES. REFER TO ARCHITECT REFLECTED CEILING PLAN FOR EXACT PLACEMENT.
- I — CEILING MOUNT INTERCOM SPEAKER PROVIDE 1-PAIR 22AWG SHIELDED TWISTED PAIR CABLE. HOMERUN TO PAGING CALL BUTTON. REFER TO ARCHITECT REFLECTED CEILING PLAN FOR EXACT PLACEMENT.
- CB — CONTROLS AND CALL BUTTON. HOMERUN CATEGORY 5E GREY CABLE TO HEADEND.
- CAMERA LOCATION AT 16' AFF FOR EXTERIOR, CEILING MOUNT FOR INTERIOR
- SURFACE MOUNTED 12" ANALOG CLOCK AT 96" AFF. UNLESS OTHERWISE NOTED
- OWNER FURNISHED SHORT THROW DISPLAY. PROVIDE AND INSTALL OWNER FURNISHED PROJECTOR AND MOUNT. PROVIDE (1) CATEGORY 6A WHITE CABLE TO THE NEAREST TR. SEE TELECOM DETAILS.
- S — CEILING MOUNTED VOICE RE-ENFORCEMENT SPEAKER. REFER TO ARCHITECT REFLECTED CEILING PLAN FOR EXACT PLACEMENT.
- LCD/UD — 27" WALL MOUNTED LCD. SEE T702 FOR CONNECTION RELATED TO UNIFIED CAMPUS SYSTEM, INTRUSION, ACCESS AND SOUND SYSTEM CONNECTIONS.
- AV ENCL — 6x6x4 J-BOX FOR AV/PAGING/CONTROLS. PROVIDE (3) 1-1/2" CONDUITS TO ACCESSIBLE CEILING IN THIS ROOM.
- D — DOOR CONTACT - PROVIDE 1/2" CONDUIT TO DOOR FRAME. PROVIDE 22AWG 1 PAIR CABLE TO THE SECURITY PANEL OR ZONE EXPANDER.
- K — SECURITY KEYPAD PROVIDE 1/2" CONDUIT TO DOUBLE GANG BOX AT +44" AFF. PROVIDE 22AWG 3-PAIR TO THE SECURITY PANEL OR ZONE EXPANDER
- M — MOTION SENSOR -PROVIDE 1/2" CONDUIT TO SINGLE GANG BOX AT +108" AFF. PROVIDE 22AWG 2-PAIR TO THE SECURITY PANEL OR ZONE EXPANDER.
- R — CARD READER - PROVIDE 3/4" CONDUIT TO SINGLE GANG BOX AT +44" AFF. COORDINATE DEVICES PLACEMENT WITH DOOR INSTALLER AS SOME DEVICES MAY BE LOCATED ON DOOR MULLIONS. PROVIDE 22AWG 3-PAIR SHIELDED TO THE ACCESS PANEL.
- G — GLASSBREAK SENSOR - NOT USED
- S — SECURITY SYSTEM SIREN, 16/2 TO INTRUSION PANEL
- REX — SECURITY SYSTEM REQUEST TO EXIT. AT ADA ENTRY OR ADJACENT TO KEYPAD, PROVIDE 22/6 TO INTRUSION PANEL

KEYED NOTES:

1. PROVIDE PROTECTIVE WIRE COVER..
2. ARMING/DISARMING KEYPAD LOCATION, GREY. HID5355AGK09.
3. DOOR CONTROL KEYPAD LOCATION, WHITE. HID5355ABK09.
4. LOCK DOWN INITIATION BUTTON.
5. SOUND SYSTEM CABINET
6. GYM SOUND AND VIDEO CONTROL PANEL LOCATION. PROVIDE 12X12X4 LOCKING J-BOX
7. MULTIPURPOSE SOUND SYSTEM LOCATION PROVIDE 12X12X4 LOCKING J-BOX
8. GYM VIDEO SYSTEM CONNECTION.
9. MULTI-PURPOSE VIDEO CONNECTION.
10. 6-GANG FLOORBOX, (6) 1" C TO SOUND SYSTEM LOCATION
11. CEILING MOUNTED DAS ANTENNA LOCATION. PROVIDE COAX TO NEAREST TELECOM ROOM.
12. PROVIDE CAT 6A TO NEAREST TELECOM ROOM. INSTALL OWNER FURNISHED MOUNT AND LCD TV.

GENERAL NOTES: -

1. CCTV SECURITY CAMERAS AS SHOWN CABLING AND ROUGH IN ONLY. CAMERA, HARDWARE AND SOFTWARE IS BY OTHERS.
2. CLASSROOM SOUND SYSTEMS INCLUDE A CEILING OR WALL MOUNTED INFRA RED SENSOR. PROVIDED 1 PER EQUIPPED ROOM. COORDINATE WITH ARCHITECT REFLECTED CEILING PLANS.
3. PROVIDE (1) 22AWG 1 PAIR CABLE FROM MOTORIZED SHADES TO THE NEAREST EXBREL-8 LAN RELAY INTERFACE.

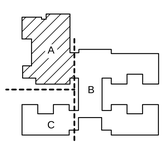

SECTOR KEY PLAN

PIVOT ARCHITECTURE

NORTHWEST INFORMATION SERVICES
8235 SW NIMBUS, SUITE 125
BEAVERTON, OREGON 97008
PHONE:(503)246-8585 FAX:(503)246-8705

HOWARD RECONCILED SET

EUGENE SCHOOL DISTRICT
4J
44 W. BROADWAY ST. EUGENE, OREGON

HOWARD ELEMENTARY SCHOOL

PARTIAL 1ST FLOOR PLAN SECTOR A

PROJECT #:	1336
ISSUE DATE:	10/28/2014
DRAWN:	DDH
CHECKED:	JW
REVISIONS:	

T111

© 2014 PIVOT ARCHITECTURE

PRINTED ON: 10/22/2014 6:28:30 AM FROM FILE: H:\EUGENESCHOOLDISTRICT\HOWARD\DRAWINGS\T111.DWG

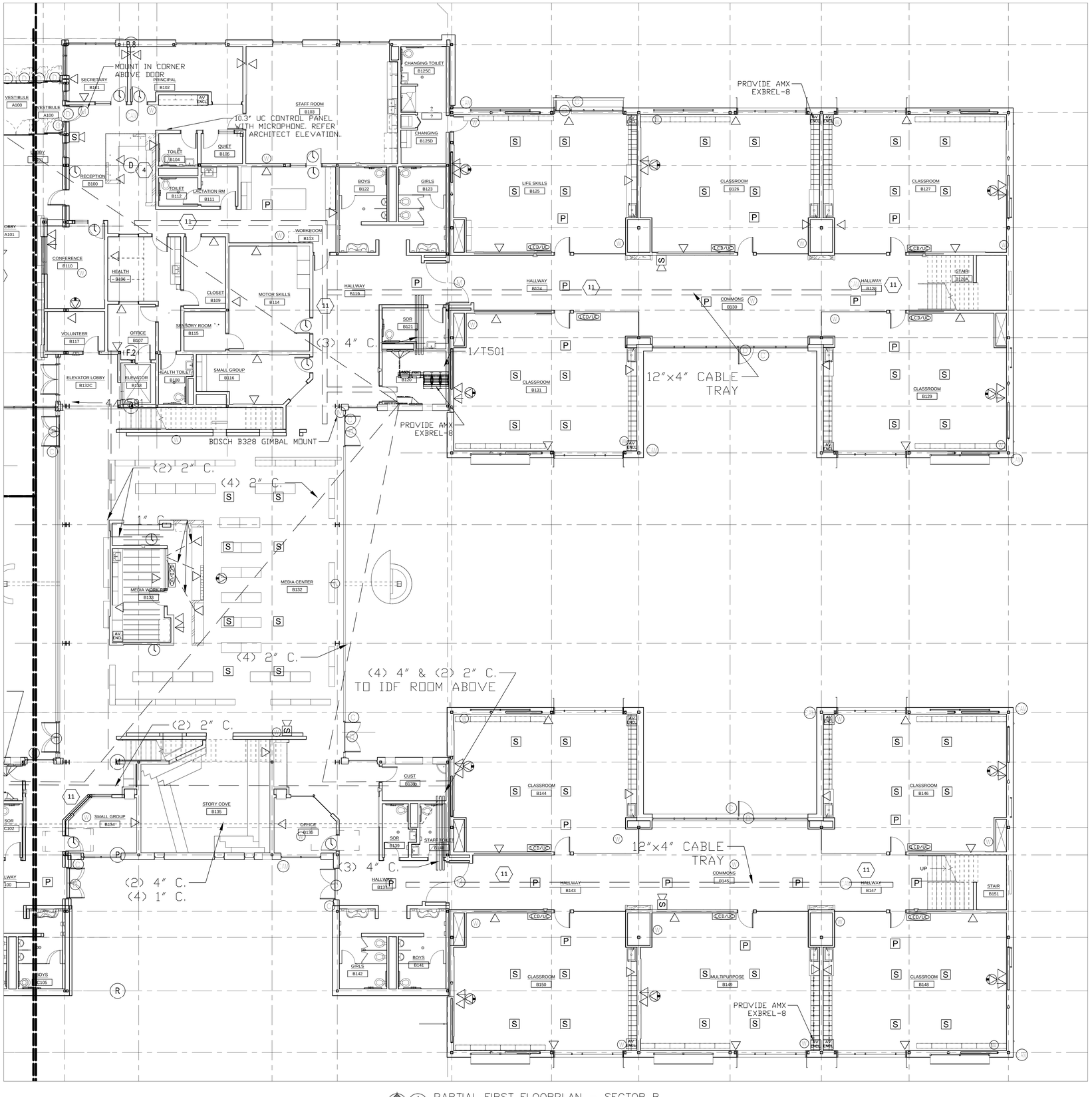

1 / T112 PARTIAL FIRST FLOORPLAN – SECTOR B
1/8" = 1'-0"

PLAN SYMBOL LEGEND

- SINGLE DATA LOCATION FOR CCTV MOUNT AT 15'-0" UNLESS OTHERWISE NOTED. PROVIDE (1) CATEGORY 6A BLUE CABLE.
- DUAL DATA LOCATION. PROVIDE (2) CATEGORY 6A BLUE CABLES.
- TRIPLE DATA LOCATION, (3) CATEGORY 6A BLUE CABLES.
- PRESENTER LOCATION. PROVIDE (1) PRE-TERMINATED MINI-AUDIO, VGA VIDEO CABLE TO SHORT THROW PROJECTOR. PROVIDE (1) PRE-TERMINATED HDMI CABLE TO SHORT THROW PROJECTOR AND LCD FLAT PANEL.
- (W) WIRELESS ACCESS POINT. (2) CATEGORY 6A YELLOW CABLE. COIL 20' SLACK LOOP AT LOCATION INDICATED. TERMINATE IN 2-PORT MODULAR JACK BOX AMP # 1116697-1 OR EQUAL. CEILING MOUNTED UNLESS OTHERWISE NOTED.
- P WALL MOUNT PAGING SPEAKER PROVIDE 18AWG SHIELDED TWISTED PAIR CABLE. UP TO 10 SPEAKERS MAY BE CONNECTED IN SERIES.
- P CEILING MOUNT PAGING SPEAKER PROVIDE 18AWG SHIELDED TWISTED PAIR CABLE. UP TO 10 SPEAKERS MAY BE CONNECTED IN SERIES. REFER TO ARCHITECT REFLECTED CEILING PLAN FOR EXACT PLACEMENT.
- I CEILING MOUNT INTERCOM SPEAKER PROVIDE 1-PAIR 22AWG SHIELDED TWISTED PAIR CABLE. HOMERUN TO PAGING CALL BUTTON. REFER TO ARCHITECT REFLECTED CEILING PLAN FOR EXACT PLACEMENT.
- CB CONTROLS AND CALL BUTTON. HOMERUN CATEGORY 5E GREY CABLE TO HEADEND.
- (C) CAMERA LOCATION AT 16' AFF FOR EXTERIOR, CEILING MOUNT FOR INTERIOR
- SURFACE MOUNTED 12" ANALOG CLOCK AT 96" AFF. UNLESS OTHERWISE NOTED
- OWNER FURNISHED SHORT THROW DISPLAY. PROVIDE AND INSTALL OWNER FURNISHED PROJECTOR AND MOUNT. PROVIDE (1) CATEGORY 6A WHITE CABLE TO THE NEAREST TR. SEE TELECOM DETAILS.
- S CEILING MOUNTED VOICE RE-ENFORCEMENT SPEAKER. REFER TO ARCHITECT REFLECTED CEILING PLAN FOR EXACT PLACEMENT.
- LCD/UD 27" WALL MOUNTED LCD. SEE T702 FOR CONNECTION RELATED TO UNIFIED CAMPUS SYSTEM, INTRUSION, ACCESS AND SOUND SYSTEM CONNECTIONS.
- AV ENCL 6x6x4 J-BOX FOR AV/PAGING/CONTROLS. PROVIDE (3) 1-1/2" CONDUITS TO ACCESSIBLE CEILING IN THIS ROOM.
- (D) DOOR CONTACT - PROVIDE 1/2" CONDUIT TO DOOR FRAME. PROVIDE 22AWG 1 PAIR CABLE TO THE SECURITY PANEL OR ZONE EXPANDER.
- (K) SECURITY KEYPAD PROVIDE 1/2" CONDUIT TO DOUBLE GANG BOX AT +44" AFF. PROVIDE 22AWG 3-PAIR TO THE SECURITY PANEL OR ZONE EXPANDER
- (M) MOTION SENSOR -PROVIDE 1/2" CONDUIT TO SINGLE GANG BOX AT +108" AFF. PROVIDE 22AWG 2-PAIR TO THE SECURITY PANEL OR ZONE EXPANDER.
- (R) CARD READER - PROVIDE 3/4" CONDUIT TO SINGLE GANG BOX AT +44" AFF. COORDINATE DEVICES PLACEMENT WITH DOOR INSTALLER AS SOME DEVICES MAY BE LOCATED ON DOOR MULLIONS. PROVIDE 22AWG 3-PAIR SHIELDED TO THE ACCESS PANEL.
- (G) GLASSBREAK SENSOR - NOT USED
- S SECURITY SYSTEM SIREN, 16/2 TO INTRUSION PANEL
- REX SECURITY SYSTEM REQUEST TO EXIT. AT ADA ENTRY OR ADJACENT TO KEYPAD, PROVIDE 22/6 TO INTRUSION PANEL

(X) KEYED NOTES: -

1. PROVIDE PROTECTIVE WIRE COVER..
2. ARMING/DISARMING KEYPAD LOCATION, GREY. HID5355AGK09.
3. DOOR CONTROL KEYPAD LOCATION, WHITE. HID5355ABK09.
4. LOCK DOWN INITIATION BUTTON.
5. SOUND SYSTEM CABINET
6. GYM SOUND AND VIDEO CONTROL PANEL LOCATION. PROVIDE 12X12X4 LOCKING J-BOX
7. MULTIPURPOSE SOUND SYSTEM LOCATION PROVIDE 12X12X4 LOCKING J-BOX
8. GYM VIDEO SYSTEM CONNECTION.
9. MULTI-PURPOSE VIDEO CONNECTION.
10. 6-GANG FLOORBOX, (6) 1" C TO SOUND SYSTEM LOCATION
11. CEILING MOUNTED DAS ANTENNA LOCATION. PROVIDE COAX TO NEAREST TELECOM ROOM.
12. PROVIDE CAT 6A TO NEAREST TELECOM ROOM. INSTALL OWNER FURNISHED MOUNT AND LCD TV.

GENERAL NOTES: -

1. CCTV SECURITY CAMERAS AS SHOWN CABLING AND ROUGH IN ONLY. CAMERA, HARDWARE AND SOFTWARE IS BY OTHERS.
2. CLASSROOM SOUND SYSTEMS INCLUDE A CEILING OR WALL MOUNTED INFRA RED SENSOR. PROVIDED 1 PER EQUIPPED ROOM. COORDINATE WITH ARCHITECT REFLECTED CEILING PLANS.
3. PROVIDE (1) 22AWG 1 PAIR CABLE FROM MOTORIZED SHADES TO THE NEAREST EXBREL-8 LAN RELAY INTERFACE.

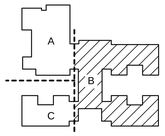

SECTOR KEY PLAN

PIVOT ARCHITECTURE

NORTHWEST INFORMATION SERVICES
8285 SW NIMBUS, SUITE 125
BEAVERTON, OREGON 97008
PHONE:(503)246-8585 FAX:(503)246-8706

HOWARD RECONCILED SET
EUGENE SCHOOL DISTRICT
44 W. BROADWAY ST, EUGENE, OREGON
HOWARD ELEMENTARY SCHOOL

PARTIAL 1ST FLOOR PLAN SECTOR B

PROJECT #:	1336
ISSUE DATE:	10/23/2014
DRAWN:	DDH
CHECKED:	JW
REVISIONS:	

T112

© 2014 PIVOT ARCHITECTURE

PRINTED ON: 10/22/2014 6:28:30 AM FROM FILE: H:\EUGENESCHOOLDISTRICT\HOWARD\DRAWINGS\T112.DWG

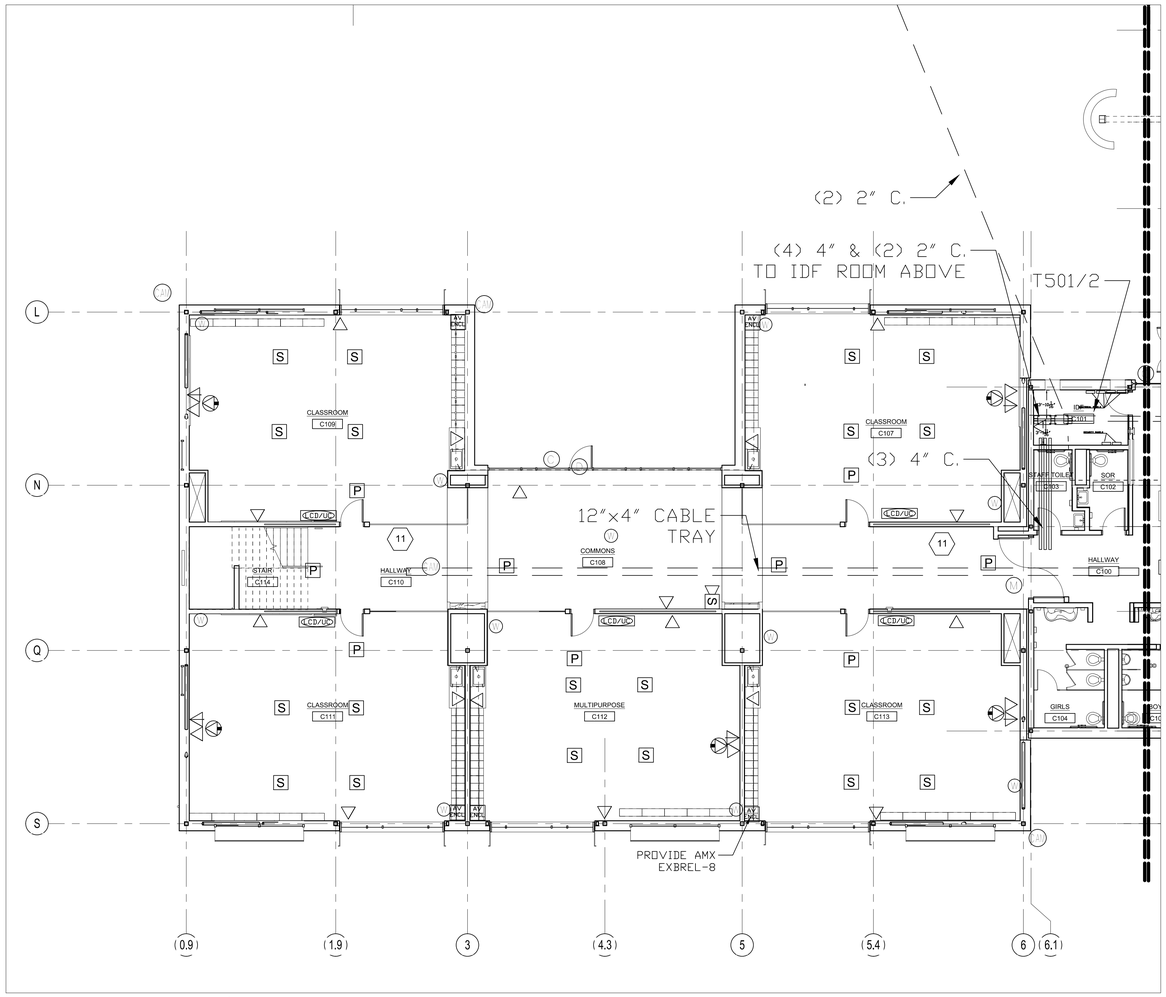

1 T113 PARTIAL FIRST FLOORPLAN SECTOR C
1/8" = 1'-0"

PLAN SYMBOL LEGEND

- SINGLE DATA LOCATION FOR CCTV MOUNT AT 15'-0" UNLESS OTHERWISE NOTED. PROVIDE (1) CATEGORY 6A BLUE CABLE.
- DUAL DATA LOCATION. PROVIDE (2) CATEGORY 6A BLUE CABLES.
- TRIPLE DATA LOCATION, (3) CATEGORY 6A BLUE CABLES.
- PRESENTER LOCATION. PROVIDE (1) PRE-TERMINATED MINI-AUDIO, VGA VIDEO CABLE TO SHORT THROW PROJECTOR. PROVIDE (1) PRE-TERMINATED HDMI CABLE TO SHORT THROW PROJECTOR AND LCD FLAT PANEL.
- (W) WIRELESS ACCESS POINT. (2) CATEGORY 6A YELLOW CABLE. COIL 20' SLACK LOOP AT LOCATION INDICATED. TERMINATE IN 2-PORT MODULAR JACK BOX AMP # 1116697-1 OR EQUAL. CEILING MOUNTED UNLESS OTHERWISE NOTED.
- P WALL MOUNT PAGING SPEAKER PROVIDE 18AWG SHIELDED TWISTED PAIR CABLE. UP TO 10 SPEAKERS MAY BE CONNECTED IN SERIES.
- P CEILING MOUNT PAGING SPEAKER PROVIDE 18AWG SHIELDED TWISTED PAIR CABLE. UP TO 10 SPEAKERS MAY BE CONNECTED IN SERIES. REFER TO ARCHITECT REFLECTED CEILING PLAN FOR EXACT PLACEMENT.
- I CEILING MOUNT INTERCOM SPEAKER PROVIDE 1-PAIR 22AWG SHIELDED TWISTED PAIR CABLE. HOMERUN TO PAGING CALL BUTTON. REFER TO ARCHITECT REFLECTED CEILING PLAN FOR EXACT PLACEMENT.
- CB CONTROLS AND CALL BUTTON. HOMERUN CATEGORY 5E GREY CABLE TO HEADEND.
- (C) CAMERA LOCATION AT 16' AFF FOR EXTERIOR, CEILING MOUNT FOR INTERIOR
- SURFACE MOUNTED 12" ANALOG CLOCK AT 96" AFF. UNLESS OTHERWISE NOTED
- OWNER FURNISHED SHORT THROW DISPLAY. PROVIDE AND INSTALL OWNER FURNISHED PROJECTOR AND MOUNT. PROVIDE (1) CATEGORY 6A WHITE CABLE TO THE NEAREST TR. SEE TELECOM DETAILS.
- S CEILING MOUNTED VOICE RE-ENFORCEMENT SPEAKER. REFER TO ARCHITECT REFLECTED CEILING PLAN FOR EXACT PLACEMENT.
- LCD/UP 27" WALL MOUNTED LCD. SEE T702 FOR CONNECTION RELATED TO UNIFIED CAMPUS SYSTEM, INTRUSION, ACCESS AND SOUND SYSTEM CONNECTIONS.
- AV ENCL 6x6x4 J-BOX FOR AV/PAGING/CONTROLS. PROVIDE (3) 1-1/2" CONDUITS TO ACCESSIBLE CEILING IN THIS ROOM.
- (D) DOOR CONTACT - PROVIDE 1/2" CONDUIT TO DOOR FRAME. PROVIDE 22AWG 1 PAIR CABLE TO THE SECURITY PANEL OR ZONE EXPANDER.
- (K) SECURITY KEYPAD PROVIDE 1/2" CONDUIT TO DOUBLE GANG BOX AT +44" AFF. PROVIDE 22AWG 3-PAIR TO THE SECURITY PANEL OR ZONE EXPANDER
- (M) MOTION SENSOR -PROVIDE 1/2" CONDUIT TO SINGLE GANG BOX AT +108" AFF. PROVIDE 22AWG 2-PAIR TO THE SECURITY PANEL OR ZONE EXPANDER.
- (R) CARD READER - PROVIDE 3/4" CONDUIT TO SINGLE GANG BOX AT +44" AFF. COORDINATE DEVICES PLACEMENT WITH DOOR INSTALLER AS SOME DEVICES MAY BE LOCATED ON DOOR MULLIONS. PROVIDE 22AWG 3-PAIR SHIELDED TO THE ACCESS PANEL.
- (G) GLASSBREAK SENSOR - NOT USED
- S SECURITY SYSTEM SIREN, 16/2 TO INTRUSION PANEL
- REX SECURITY SYSTEM REQUEST TO EXIT. AT ADA ENTRY OR ADJACENT TO KEYPAD, PROVIDE 22/6 TO INTRUSION PANEL

(X) KEYED NOTES:

1. PROVIDE PROTECTIVE WIRE COVER..
2. ARMING/DISARMING KEYPAD LOCATION, GREY. HID5355AGK09.
3. DOOR CONTROL KEYPAD LOCATION, WHITE. HID5355ABK09.
4. LOCK DOWN INITIATION BUTTON.
5. SOUND SYSTEM CABINET
6. GYM SOUND AND VIDEO CONTROL PANEL LOCATION. PROVIDE 12X12X4 LOCKING J-BOX
7. MULTIPURPOSE SOUND SYSTEM LOCATION PROVIDE 12X12X4 LOCKING J-BOX
8. GYM VIDEO SYSTEM CONNECTION.
9. MULTI-PURPOSE VIDEO CONNECTION.
10. 6-GANG FLOORBOX, (6) 1" C TO SOUND SYSTEM LOCATION
11. CEILING MOUNTED DAS ANTENNA LOCATION. PROVIDE COAX TO NEAREST TELECOM ROOM.
12. PROVIDE CAT 6A TO NEAREST TELECOM ROOM. INSTALL OWNER FURNISHED MOUNT AND LCD TV.

GENERAL NOTES: -

1. CCTV SECURITY CAMERAS AS SHOWN CABLING AND ROUGH IN ONLY. CAMERA, HARDWARE AND SOFTWARE IS BY OTHERS.
2. CLASSROOM SOUND SYSTEMS INCLUDE A CEILING OR WALL MOUNTED INFRA RED SENSOR. PROVIDED 1 PER EQUIPPED ROOM. COORDINATE WITH ARCHITECT REFLECTED CEILING PLANS.
3. PROVIDE (1) 22AWG 1 PAIR CABLE FROM MOTORIZED SHADES TO THE NEAREST EXBREL-8 LAN RELAY INTERFACE.

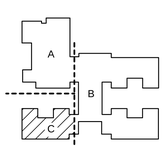

SECTOR KEY PLAN

PIVOT ARCHITECTURE

BICSI CABLING DESIGN CERTIFICATION
CHARMAIN G. HERNANDEZ
FULL NO. 141161-01
EXPIRES 10-01-14
SIGNATURE

NORTHWEST INFORMATION SERVICES
8285 SW NIMBUS, SUITE 125
BEAVERTON, OREGON 97008
PHONE:(503)246-8585 FAX:(503)246-8705

HOWARD RECONCILED SET
EUGENE SCHOOL DISTRICT
44 W. BROADWAY ST. EUGENE, OREGON
HOWARD ELEMENTARY SCHOOL

PARTIAL 1ST
FLOOR PLAN
SECTOR C

PROJECT #:	1336
REVISIONS:	
ISSUE DATE:	10/28/2014
DRAWN:	DDH
CHECKED:	JW

T113

© 2014 PIVOT ARCHITECTURE

PRINTED ON: 10/22/2014 6:28:30 AM FROM FILE: H:\EUGENESCHOOLDISTRICT\HOWARD\DRAWINGS\T113.DWG

© 2014 PIVOT ARCHITECTURE

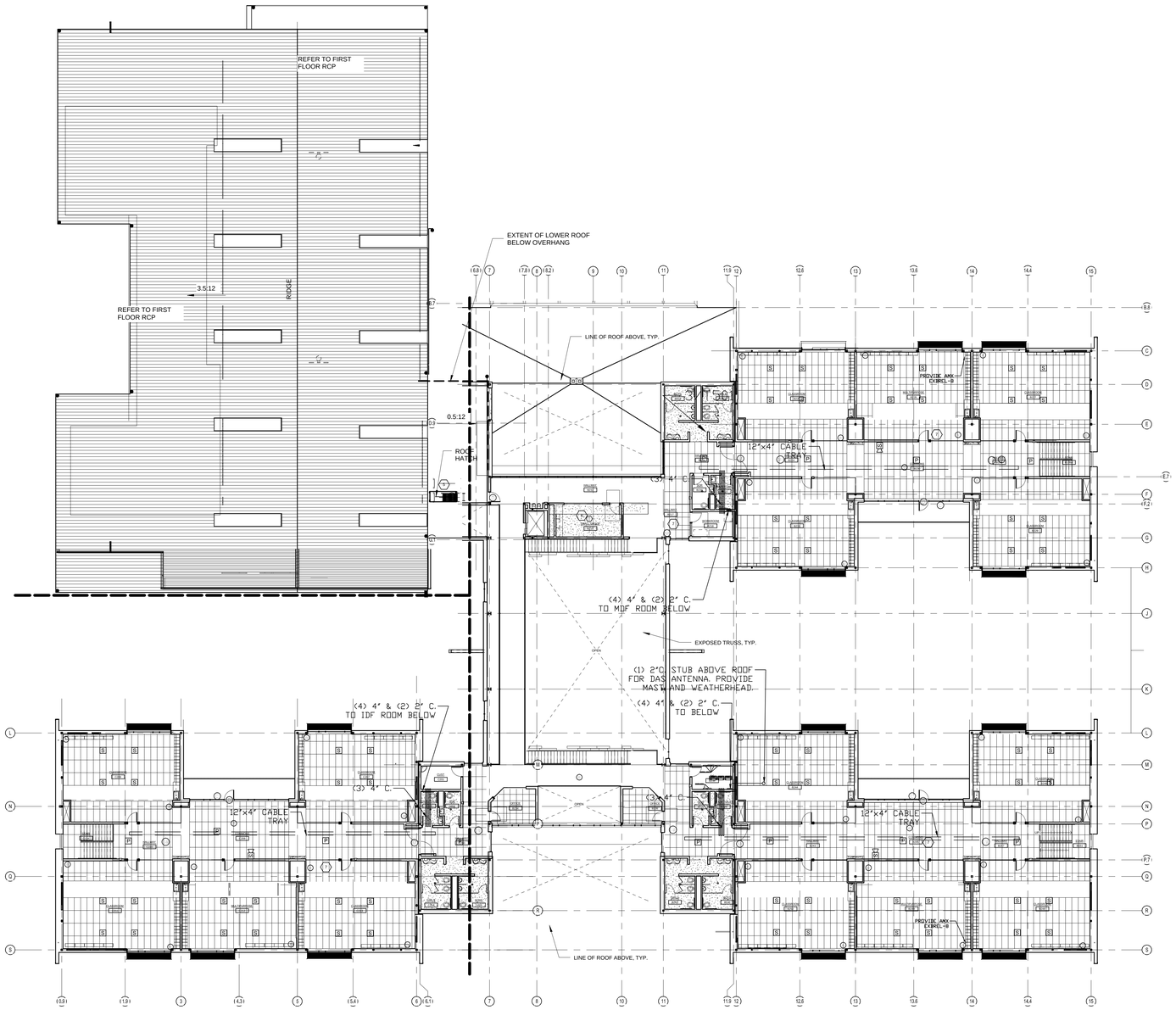

1 / T120 OVERALL SECOND FLOOR PLAN & RCP
1/16" = 1'-0"

PLAN SYMBOL LEGEND

- SINGLE DATA LOCATION FOR CCTV MOUNT AT 15'-0" UNLESS OTHERWISE NOTED. PROVIDE (1) CATEGORY 6A BLUE CABLE.
- DUAL DATA LOCATION. PROVIDE (2) CATEGORY 6A BLUE CABLES.
- TRIPLE DATA LOCATION, (3) CATEGORY 6A BLUE CABLES.
- PRESENTER LOCATION. PROVIDE (1) PRE-TERMINATED MINI-AUDIO, VGA VIDEO CABLE TO SHORT THROW PROJECTOR. PROVIDE (1) PRE-TERMINATED HDMI CABLE TO SHORT THROW PROJECTOR AND LCD FLAT PANEL.
- (W) WIRELESS ACCESS POINT. (2) CATEGORY 6A YELLOW CABLE. COIL 20' SLACK LOOP AT LOCATION INDICATED. TERMINATE IN 2-PORT MODULAR JACK BOX AMP # 1116697-1 OR EQUAL. CEILING MOUNTED UNLESS OTHERWISE NOTED.
- P WALL MOUNT PAGING SPEAKER PROVIDE 18AWG SHIELDED TWISTED PAIR CABLE. UP TO 10 SPEAKERS MAY BE CONNECTED IN SERIES.
- P CEILING MOUNT PAGING SPEAKER PROVIDE 18AWG SHIELDED TWISTED PAIR CABLE. UP TO 10 SPEAKERS MAY BE CONNECTED IN SERIES. REFER TO ARCHITECT REFLECTED CEILING PLAN FOR EXACT PLACEMENT.
- I CEILING MOUNT INTERCOM SPEAKER PROVIDE 1-PAIR 22AWG SHIELDED TWISTED PAIR CABLE. HOMERUN TO PAGING CALL BUTTON. REFER TO ARCHITECT REFLECTED CEILING PLAN FOR EXACT PLACEMENT.
- CB CONTROLS AND CALL BUTTON. HOMERUN CATEGORY 5E GREY CABLE TO HEADEND.
- (CM) CAMERA LOCATION AT 16' AFF FOR EXTERIOR, CEILING MOUNT FOR INTERIOR
- SURFACE MOUNTED 12" ANALOG CLOCK AT 96" AFF. UNLESS OTHERWISE NOTED
- OWNER FURNISHED SHORT THROW DISPLAY. PROVIDE AND INSTALL OWNER FURNISHED PROJECTOR AND MOUNT. PROVIDE (1) CATEGORY 6A WHITE CABLE TO THE NEAREST TR. SEE TELECOM DETAILS.
- S CEILING MOUNTED VOICE RE-ENFORCEMENT SPEAKER. REFER TO ARCHITECT REFLECTED CEILING PLAN FOR EXACT PLACEMENT.
- 27" WALL MOUNTED LCD. SEE T702 FOR CONNECTION RELATED TO UNIFIED CAMPUS SYSTEM, INTRUSION, ACCESS AND SOUND SYSTEM CONNECTIONS.
- AV ENCL 6x6x4 J-BOX FOR AV/PAGING/CONTROLS. PROVIDE (3) 1-1/2" CONDUITS TO ACCESSIBLE CEILING IN THIS ROOM.
- (D) DOOR CONTACT - PROVIDE 1/2" CONDUIT TO DOOR FRAME. PROVIDE 22AWG 1 PAIR CABLE TO THE SECURITY PANEL OR ZONE EXPANDER.
- (K) SECURITY KEYPAD PROVIDE 1/2" CONDUIT TO DOUBLE GANG BOX AT +44" AFF. PROVIDE 22AWG 3-PAIR TO THE SECURITY PANEL OR ZONE EXPANDER
- (M) MOTION SENSOR -PROVIDE 1/2" CONDUIT TO SINGLE GANG BOX AT +108" AFF. PROVIDE 22AWG 2-PAIR TO THE SECURITY PANEL OR ZONE EXPANDER.
- (C) CARD READER - PROVIDE 3/4" CONDUIT TO SINGLE GANG BOX AT +44" AFF. COORDINATE DEVICES PLACEMENT WITH DOOR INSTALLER AS SOME DEVICES MAY BE LOCATED ON DOOR MULLIONS. PROVIDE 22AWG 3-PAIR SHIELDED TO THE ACCESS PANEL.
- (G) GLASSBREAK SENSOR - NOT USED
- S SECURITY SYSTEM SIREN, 16/2 TO INTRUSION PANEL
- REX SECURITY SYSTEM REQUEST TO EXIT. AT ADA ENTRY OR ADJACENT TO KEYPAD, PROVIDE 22/6 TO INTRUSION PANEL

(X) KEYED NOTES:

1. PROVIDE PROTECTIVE WIRE COVER..
2. ARMING/DISARMING KEYPAD LOCATION, GREY. HID5355AGK09.
3. DOOR CONTROL KEYPAD LOCATION, WHITE. HID5355ABK09.
4. LOCK DOWN INITIATION BUTTON.
5. SOUND SYSTEM CABINET
6. GYM SOUND AND VIDEO CONTROL PANEL LOCATION. PROVIDE 12X12X4 LOCKING J-BOX
7. MULTIPURPOSE SOUND SYSTEM LOCATION PROVIDE 12X12X4 LOCKING J-BOX
8. GYM VIDEO SYSTEM CONNECTION.
9. MULTI-PURPOSE VIDEO CONNECTION.
10. 6-GANG FLOORBOX, (6) 1" C TO SOUND SYSTEM LOCATION
11. CEILING MOUNTED DAS ANTENNA LOCATION. PROVIDE COAX TO NEAREST TELECOM ROOM.
12. PROVIDE CAT 6A TO NEAREST TELECOM ROOM. INSTALL OWNER FURNISHED MOUNT AND LCD TV.

GENERAL NOTES: -

1. CCTV SECURITY CAMERAS AS SHOWN CABLING AND ROUGH IN ONLY. CAMERA, HARDWARE AND SOFTWARE IS BY OTHERS.
2. CLASSROOM SOUND SYSTEMS INCLUDE A CEILING OR WALL MOUNTED INFRA RED SENSOR. PROVIDED 1 PER EQUIPPED ROOM. COORDINATE WITH ARCHITECT REFLECTED CEILING PLANS.
3. PROVIDE (1) 22AWG 1 PAIR CABLE FROM THE MOTORIZED SHADES TO THE NEAREST EXBREL-8 LAN RELAY INTERFACE.

SHEET NOTES: -

1. REFER TO T121, T122 FOR WALL MOUNTED DEVICE REQUIREMENTS. THIS SHEET DOES NOT SHOW ALL TELECOM DEVICE REQUIREMENTS.

PIVOT ARCHITECTURE

REGISTERED COMMUNICATIONS DISTRIBUTION DESIGNER
BICSI
DARRION D. HUNTSICK
REG. NO. 141614-01
EXPIRES 12-01-14
SIGNATURE

NORTHWEST INFORMATION SERVICES
8285 SW NIMBUS, SUITE 125
BEAVERTON, OREGON 97008
PHONE:(503)246-8585 FAX:(503)246-8706

HOWARD RECONCILED SET
EUGENE SCHOOL DISTRICT
44 W. BROADWAY ST. EUGENE, OREGON
HOWARD ELEMENTARY SCHOOL

OVERALL 2ND FLOOR PLAN

PROJECT #:	1336
ISSUE DATE:	10/28/2014
DRAWN:	DDH
CHECKED:	JW
REVISIONS:	

T120

PRINTED ON: 10/22/2014 6:28:30 AM FROM FILE: H:\EUGENESCHOOLDISTRICT\HOWARD\DRAWINGS\T120.DWG

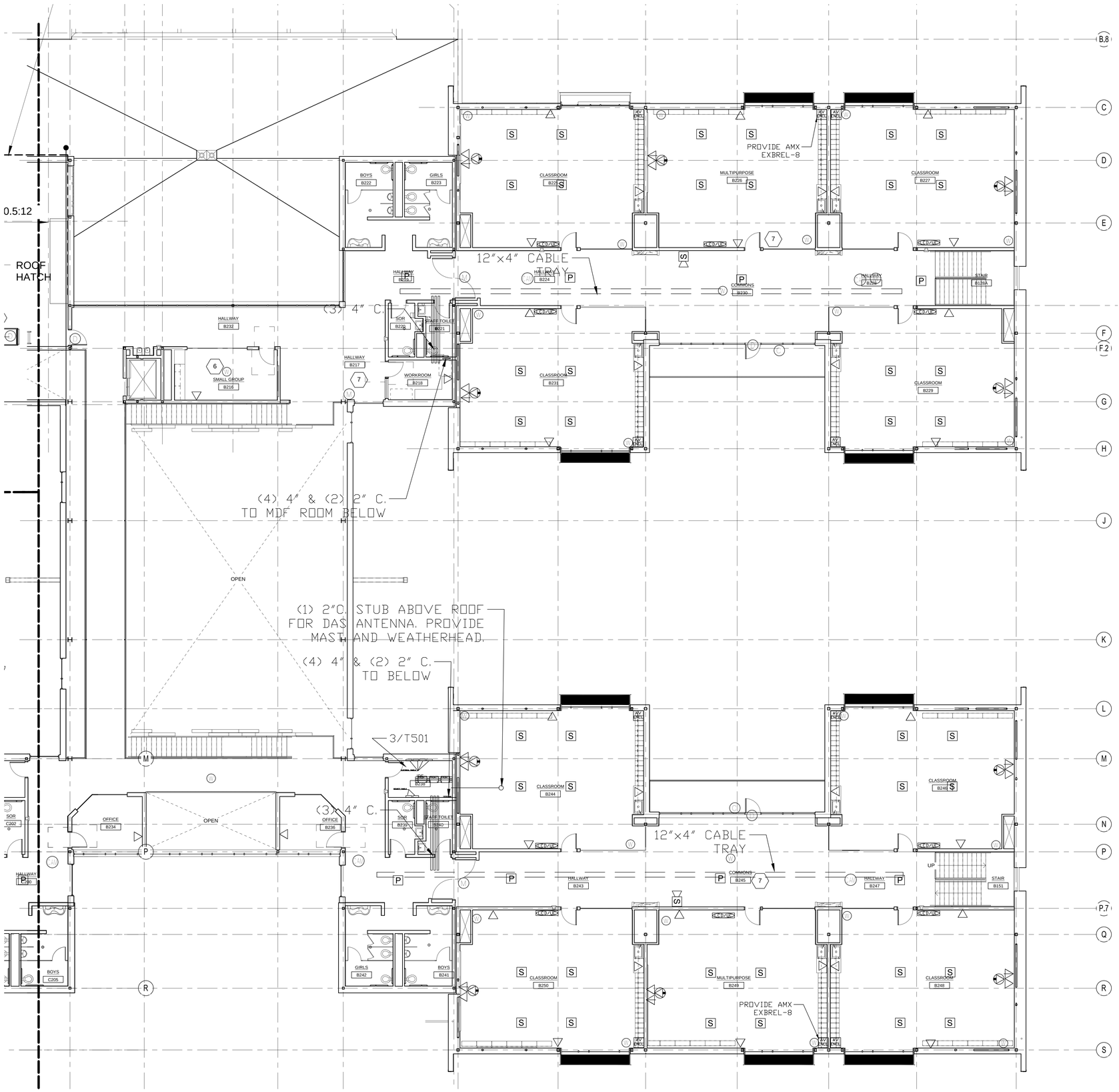

1 T121 PARTIAL SECOND FLOOR PLAN – SECTOR B
1/8" = 1'-0"

PLAN SYMBOL LEGEND

- SINGLE DATA LOCATION FOR CCTV MOUNT AT 15'-0" UNLESS OTHERWISE NOTED. PROVIDE (1) CATEGORY 6A BLUE CABLE.
- DUAL DATA LOCATION. PROVIDE (2) CATEGORY 6A BLUE CABLES.
- TRIPLE DATA LOCATION, (3) CATEGORY 6A BLUE CABLES.
- PRESENTER LOCATION. PROVIDE (1) PRE-TERMINATED MINI-AUDIO, VGA VIDEO CABLE TO SHORT THROW PROJECTOR. PROVIDE (1) PRE-TERMINATED HDMI CABLE TO SHORT THROW PROJECTOR AND LCD FLAT PANEL.
- (W) WIRELESS ACCESS POINT. (2) CATEGORY 6A YELLOW CABLE. COIL 20' SLACK LOOP AT LOCATION INDICATED. TERMINATE IN 2-PORT MODULAR JACK BOX AMP # 1116697-1 OR EQUAL. CEILING MOUNTED UNLESS OTHERWISE NOTED.
- (P) WALL MOUNT PAGING SPEAKER PROVIDE 18AWG SHIELDED TWISTED PAIR CABLE. UP TO 10 SPEAKERS MAY BE CONNECTED IN SERIES.
- (P) CEILING MOUNT PAGING SPEAKER PROVIDE 18AWG SHIELDED TWISTED PAIR CABLE. UP TO 10 SPEAKERS MAY BE CONNECTED IN SERIES. REFER TO ARCHITECT REFLECTED CEILING PLAN FOR EXACT PLACEMENT.
- (I) CEILING MOUNT INTERCOM SPEAKER PROVIDE 1-PAIR 22AWG SHIELDED TWISTED PAIR CABLE. HOMERUN TO PAGING CALL BUTTON. REFER TO ARCHITECT REFLECTED CEILING PLAN FOR EXACT PLACEMENT.
- (CB) CONTROLS AND CALL BUTTON. HOMERUN CATEGORY 5E GREY CABLE TO HEADEND.
- (CA) CAMERA LOCATION AT 16' AFF FOR EXTERIOR, CEILING MOUNT FOR INTERIOR
- SURFACE MOUNTED 12" ANALOG CLOCK AT 96" AFF. UNLESS OTHERWISE NOTED
- OWNER FURNISHED SHORT THROW DISPLAY. PROVIDE AND INSTALL OWNER FURNISHED PROJECTOR AND MOUNT. PROVIDE (1) CATEGORY 6A WHITE CABLE TO THE NEAREST TR. SEE TELECOM DETAILS.
- (S) CEILING MOUNTED VOICE RE-ENFORCEMENT SPEAKER. REFER TO ARCHITECT REFLECTED CEILING PLAN FOR EXACT PLACEMENT.
- (UCS) 27" WALL MOUNTED LCD. SEE T702 FOR CONNECTION RELATED TO UNIFIED CAMPUS SYSTEM, INTRUSION, ACCESS AND SOUND SYSTEM CONNECTIONS.
- (AV ENCL) 6x6x4 J-BOX FOR AV/PAGING/CONTROLS. PROVIDE (3) 1-1/2" CONDUITS TO ACCESSIBLE CEILING IN THIS ROOM.
- (D) DOOR CONTACT - PROVIDE 1/2" CONDUIT TO DOOR FRAME. PROVIDE 22AWG 1 PAIR CABLE TO THE SECURITY PANEL OR ZONE EXPANDER.
- (K) SECURITY KEYPAD PROVIDE 1/2" CONDUIT TO DOUBLE GANG BOX AT +44" AFF. PROVIDE 22AWG 3-PAIR TO THE SECURITY PANEL OR ZONE EXPANDER
- (M) MOTION SENSOR -PROVIDE 1/2" CONDUIT TO SINGLE GANG BOX AT +108" AFF. PROVIDE 22AWG 2-PAIR TO THE SECURITY PANEL OR ZONE EXPANDER.
- (C) CARD READER - PROVIDE 3/4" CONDUIT TO SINGLE GANG BOX AT +44" AFF. COORDINATE DEVICES PLACEMENT WITH DOOR INSTALLER AS SOME DEVICES MAY BE LOCATED ON DOOR MULLIONS. PROVIDE 22AWG 3-PAIR SHIELDED TO THE ACCESS PANEL.
- (G) GLASSBREAK SENSOR - NOT USED
- (S) SECURITY SYSTEM SIREN, 16/2 TO INTRUSION PANEL
- (REX) SECURITY SYSTEM REQUEST TO EXIT. AT ADA ENTRY OR ADJACENT TO KEYPAD, PROVIDE 22/6 TO INTRUSION PANEL

(X) KEYED NOTES:

1. PROVIDE PROTECTIVE WIRE COVER..
2. ARMING/DISARMING KEYPAD LOCATION, GREY. HID5355AGK09.
3. DOOR CONTROL KEYPAD LOCATION, WHITE. HID5355ABK09.
4. LOCK DOWN INITIATION BUTTON.
5. SOUND SYSTEM CABINET
6. GYM SOUND AND VIDEO CONTROL PANEL LOCATION. PROVIDE 12X12X4 LOCKING J-BOX.
7. MULTIPURPOSE SOUND SYSTEM LOCATION PROVIDE 12X12X4 LOCKING J-BOX
8. GYM VIDEO SYSTEM CONNECTION.
9. MULTI-PURPOSE VIDEO CONNECTION.
10. 6-GANG FLOORBOX, (6) 1" C TO SOUND SYSTEM LOCATION
11. CEILING MOUNTED DAS ANTENNA LOCATION. PROVIDE COAX TO NEAREST TELECOM ROOM.
12. PROVIDE CAT 6A TO NEAREST TELECOM ROOM. INSTALL OWNER FURNISHED MOUNT AND LCD TV.

GENERAL NOTES:

1. CCTV SECURITY CAMERAS AS SHOWN CABLING AND ROUGH IN ONLY. CAMERA, HARDWARE AND SOFTWARE IS BY OTHERS.
2. CLASSROOM SOUND SYSTEMS INCLUDE A CEILING OR WALL MOUNTED INFRA RED SENSOR. PROVIDED 1 PER EQUIPPED ROOM. COORDINATE WITH ARCHITECT REFLECTED CEILING PLANS.
3. PROVIDE (1) 22AWG 1 PAIR CABLE FROM THE MOTORIZED SHADES TO THE NEAREST EXBREL-8 LAN RELAY INTERFACE.

PIVOT ARCHITECTURE

BICSI Registered Communications Distribution Designer
Charmaine D. Hurtenek
RCDD/NTS Regist. No. 141614
Expiration Date 10-01-14
SIGNATURE

NORTHWEST INFORMATION SERVICES
8285 SW NIMBUS, SUITE 125
BEAVERTON, OREGON 97008
PHONE:(503)246-8585 FAX:(503)246-8706

HOWARD RECONCILED SET
EUGENE SCHOOL DISTRICT
44 W. BROADWAY ST. EUGENE, OREGON
HOWARD ELEMENTARY SCHOOL

PARTIAL 2ND FLOOR PLAN SECTOR B

PROJECT #:	1336
ISSUE DATE:	10/28/2014
DRAWN:	DDH
CHECKED:	JW
REVISIONS:	

T121

© 2014 PIVOT ARCHITECTURE

PRINTED ON: 10/22/2014 6:28:39 AM FROM FILE: H:\EUGENESCHOOLDISTRICT\HOWARD\DRAWINGS\T121.DWG

© 2014 PIVOT ARCHITECTURE

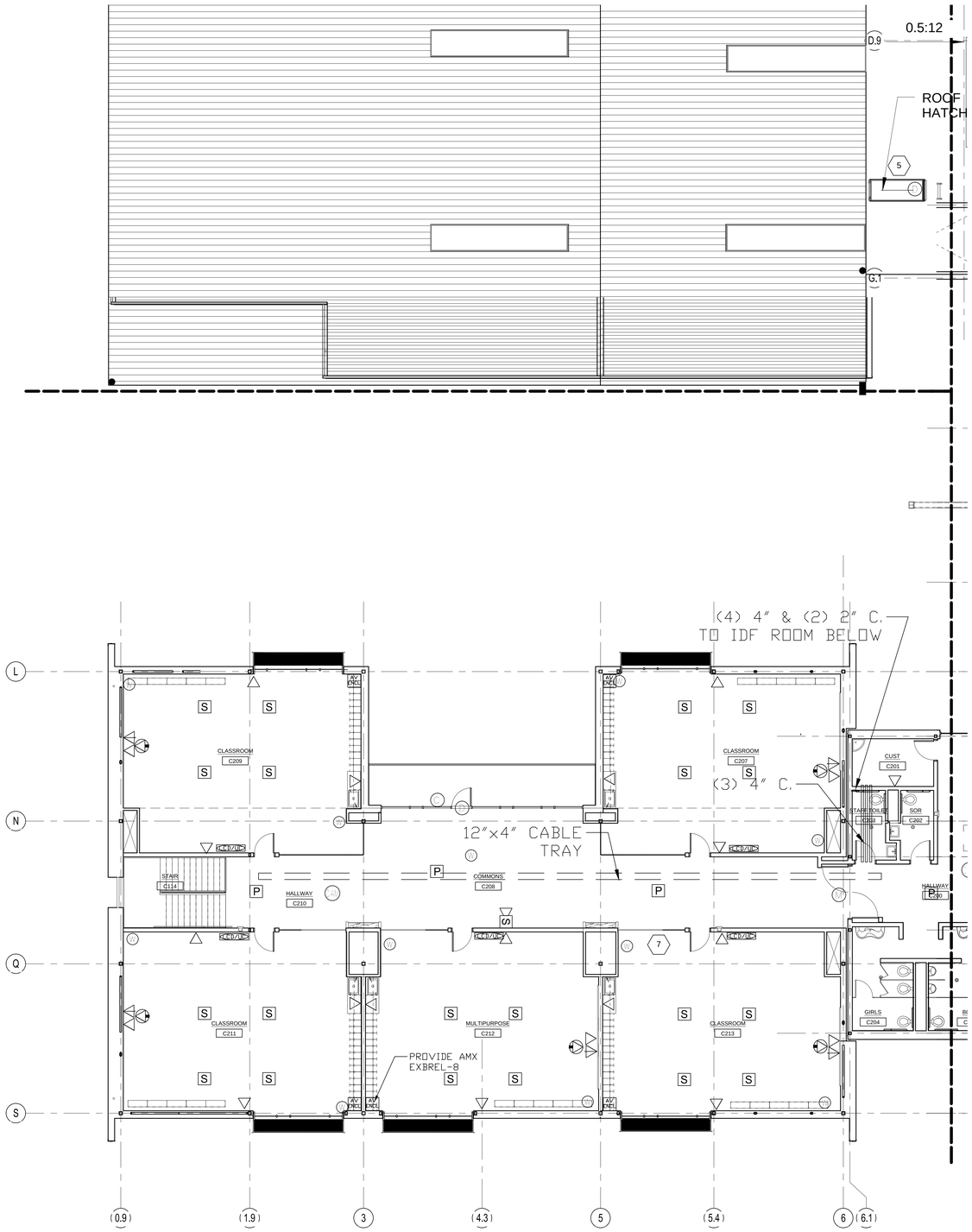

PLAN SYMBOL LEGEND

- SINGLE DATA LOCATION FOR CCTV MOUNT AT 15'-0" UNLESS OTHERWISE NOTED. PROVIDE (1) CATEGORY 6A BLUE CABLE.
- DUAL DATA LOCATION. PROVIDE (2) CATEGORY 6A BLUE CABLES.
- TRIPLE DATA LOCATION, (3) CATEGORY 6A BLUE CABLES.
- PRESENTER LOCATION. PROVIDE (1) PRE-TERMINATED MINI-AUDIO, VGA VIDEO CABLE TO SHORT THROW PROJECTOR. PROVIDE (1) PRE-TERMINATED HDMI CABLE TO SHORT THROW PROJECTOR AND LCD FLAT PANEL.
- (W) WIRELESS ACCESS POINT. (2) CATEGORY 6A YELLOW CABLE. COIL 20' SLACK LOOP AT LOCATION INDICATED. TERMINATE IN 2-PORT MODULAR JACK BOX AMP # 1116697-1 OR EQUAL. CEILING MOUNTED UNLESS OTHERWISE NOTED.
- P WALL MOUNT PAGING SPEAKER PROVIDE 18AWG SHIELDED TWISTED PAIR CABLE. UP TO 10 SPEAKERS MAY BE CONNECTED IN SERIES.
- P CEILING MOUNT PAGING SPEAKER PROVIDE 18AWG SHIELDED TWISTED PAIR CABLE. UP TO 10 SPEAKERS MAY BE CONNECTED IN SERIES. REFER TO ARCHITECT REFLECTED CEILING PLAN FOR EXACT PLACEMENT.
- I CEILING MOUNT INTERCOM SPEAKER PROVIDE 1-PAIR 22AWG SHIELDED TWISTED PAIR CABLE. HOMERUN TO PAGING CALL BUTTON. REFER TO ARCHITECT REFLECTED CEILING PLAN FOR EXACT PLACEMENT.
- CB CONTROLS AND CALL BUTTON. HOMERUN CATEGORY 5E GREY CABLE TO HEADEND.
- (M) CAMERA LOCATION AT 16' AFF FOR EXTERIOR, CEILING MOUNT FOR INTERIOR
- SURFACE MOUNTED 12" ANALOG CLOCK AT 96" AFF. UNLESS OTHERWISE NOTED
- OWNER FURNISHED SHORT THROW DISPLAY. PROVIDE AND INSTALL OWNER FURNISHED PROJECTOR AND MOUNT. PROVIDE (1) CATEGORY 6A WHITE CABLE TO THE NEAREST TR. SEE TELECOM DETAILS.
- S CEILING MOUNTED VOICE RE-ENFORCEMENT SPEAKER. REFER TO ARCHITECT REFLECTED CEILING PLAN FOR EXACT PLACEMENT.
- SCHEDULE 27" WALL MOUNTED LCD. SEE T702 FOR CONNECTION RELATED TO UNIFIED CAMPUS SYSTEM, INTRUSION, ACCESS AND SOUND SYSTEM CONNECTIONS.
- AV ENCL 6x6x4 J-BOX FOR AV/PAGING/CONTROLS. PROVIDE (3) 1-1/2" CONDUITS TO ACCESSIBLE CEILING IN THIS ROOM.
- (D) DOOR CONTACT - PROVIDE 1/2" CONDUIT TO DOOR FRAME. PROVIDE 22AWG 1 PAIR CABLE TO THE SECURITY PANEL OR ZONE EXPANDER.
- (K) SECURITY KEYPAD PROVIDE 1/2" CONDUIT TO DOUBLE GANG BOX AT +44" AFF. PROVIDE 22AWG 3-PAIR TO THE SECURITY PANEL OR ZONE EXPANDER
- (M) MOTION SENSOR -PROVIDE 1/2" CONDUIT TO SINGLE GANG BOX AT +108" AFF. PROVIDE 22AWG 2-PAIR TO THE SECURITY PANEL OR ZONE EXPANDER.
- (C) CARD READER - PROVIDE 3/4" CONDUIT TO SINGLE GANG BOX AT +44" AFF. COORDINATE DEVICES PLACEMENT WITH DOOR INSTALLER AS SOME DEVICES MAY BE LOCATED ON DOOR MULLIONS. PROVIDE 22AWG 3-PAIR SHIELDED TO THE ACCESS PANEL.
- (G) GLASSBREAK SENSOR - NOT USED
- S SECURITY SYSTEM SIREN, 16/2 TO INTRUSION PANEL
- REX SECURITY SYSTEM REQUEST TO EXIT. AT ADA ENTRY OR ADJACENT TO KEYPAD, PROVIDE 22/6 TO INTRUSION PANEL

(X) KEYED NOTES:

1. PROVIDE PROTECTIVE WIRE COVER..
2. ARMING/DISARMING KEYPAD LOCATION, GREY. HID5355AGK09.
3. DOOR CONTROL KEYPAD LOCATION, WHITE. HID5355ABK09.
4. LOCK DOWN INITIATION BUTTON.
5. SOUND SYSTEM CABINET
6. GYM SOUND AND VIDEO CONTROL PANEL LOCATION. PROVIDE 12X12X4 LOCKING J-BOX
7. MULTIPURPOSE SOUND SYSTEM LOCATION PROVIDE 12X12X4 LOCKING J-BOX
8. GYM VIDEO SYSTEM CONNECTION.
9. MULTI-PURPOSE VIDEO CONNECTION.
10. 6-GANG FLOORBOX, (6) 1" C TO SOUND SYSTEM LOCATION
11. CEILING MOUNTED DAS ANTENNA LOCATION. PROVIDE COAX TO NEAREST TELECOM ROOM.
12. PROVIDE CAT 6A TO NEAREST TELECOM ROOM. INSTALL OWNER FURNISHED MOUNT AND LCD TV.

GENERAL NOTES: -

1. CCTV SECURITY CAMERAS AS SHOWN CABLING AND ROUGH IN ONLY. CAMERA, HARDWARE AND SOFTWARE IS BY OTHERS.
2. CLASSROOM SOUND SYSTEMS INCLUDE A CEILING OR WALL MOUNTED INFRA RED SENSOR. PROVIDED 1 PER EQUIPPED ROOM. COORDINATE WITH ARCHITECT REFLECTED CEILING PLANS.
3. PROVIDE (1) 22AWG 1 PAIR CABLE FROM THE MOTORIZED SHADES TO THE NEAREST EXBREL-8 LAN RELAY INTERFACE.

1 / T122 PARTIAL SECOND FLOOR PLAN – SECTOR C
1/8" = 1'-0"

PIVOT ARCHITECTURE

BICSI Certified Technician
Cameron G. Hathaway
Reg. No. 1416143
Exp. 03-01-15
SIGNATURE

NORTHWEST INFORMATION SERVICES
8235 SW NIMBUS, SUITE 125
BEAVERTON, OREGON 97008
PHONE:(503)246-8585 FAX:(503)246-8705

HOWARD RECONCILED SET
EUGENE SCHOOL DISTRICT
44 W. BROADWAY ST. EUGENE, OREGON
HOWARD ELEMENTARY SCHOOL

PARTIAL 2ND FLOOR PLAN SECTOR C

PROJECT #:	1336
ISSUE DATE:	10/28/2014
DRAWN:	EDH
CHECKED:	JW
REVISIONS:	

T122

PRINTED ON: 10/22/2014 6:28:30 AM FROM FILE: H:\EUGENESCHOOLDISTRICT\HOWARD\DRAWINGS\T122.DWG

© 2014 PIVOT ARCHITECTURE

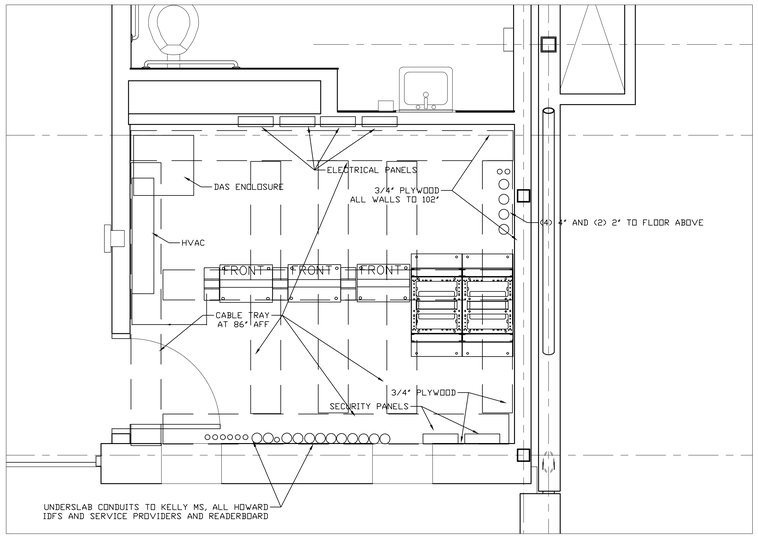

1 T501 PARTIAL PLAN – MDF
1/2" = 1'-0"

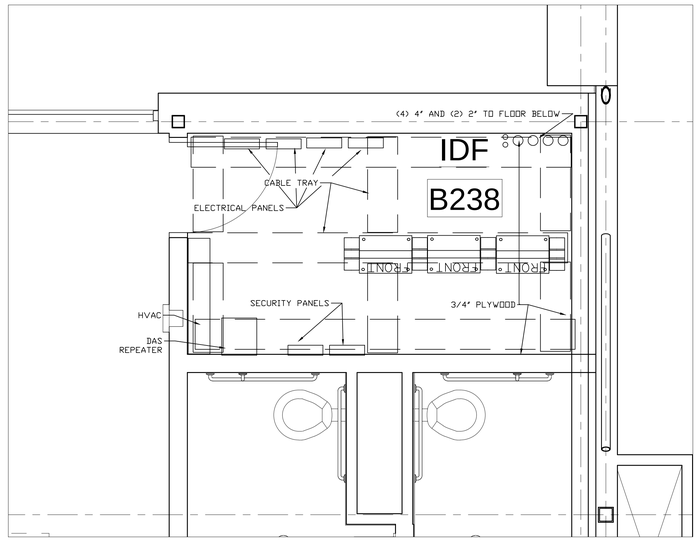

3 T501 PARTIAL PLAN – IDF-2 (SECOND FLOOR)
1/16" = 1'-0"

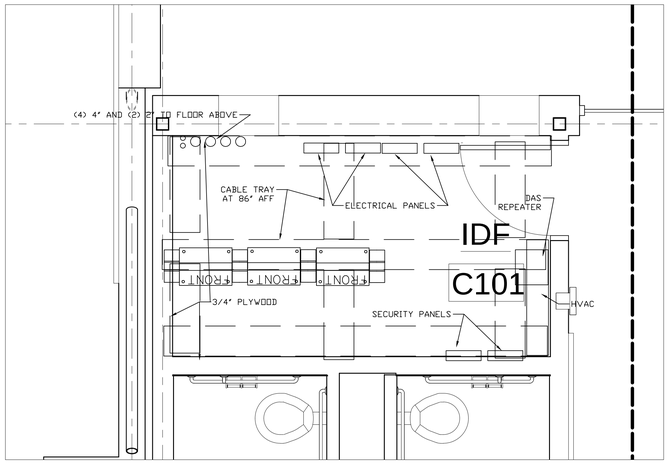

2 T501 PARTIAL PLAN – IDF-1
1/16" = 1'-0"

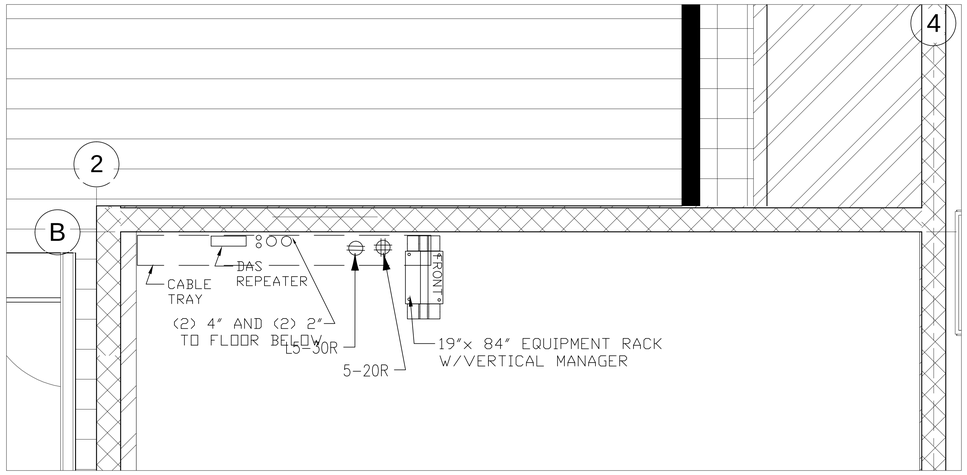

4 T501 PARTIAL PLAN IDF 3 – MECH LOFT
1/16" = 1'-0"

PIVOT ARCHITECTURE

BICSI
DARREN D. HUNTLEY
REG. No. 14161491
EXPIRES 12-01-14
SIGNATURE

NORTHWEST INFORMATION SERVICES
8285 SW NIMBUS, SUITE 125
BEAVERTON, OREGON 97008
PHONE:(503)246-8585 FAX:(503)246-8706

HOWARD RECONCILED SET

EUGENE SCHOOL DISTRICT
4J
44 W. BROADWAY ST. EUGENE, OREGON

HOWARD ELEMENTARY SCHOOL

PARTIAL PLAN
TELECOM
ROOMS

PROJECT #:	1336
ISSUE DATE:	10/28/2014
DRAWN:	DGH
CHECKED:	JW
REVISIONS:	

T501

PRINTED ON: 10/22/2014 6:44:50 PM FROM FILE: H:\EUGENESCHOOLDISTRICT\HOWARD\DRAWINGS\T501.DWG

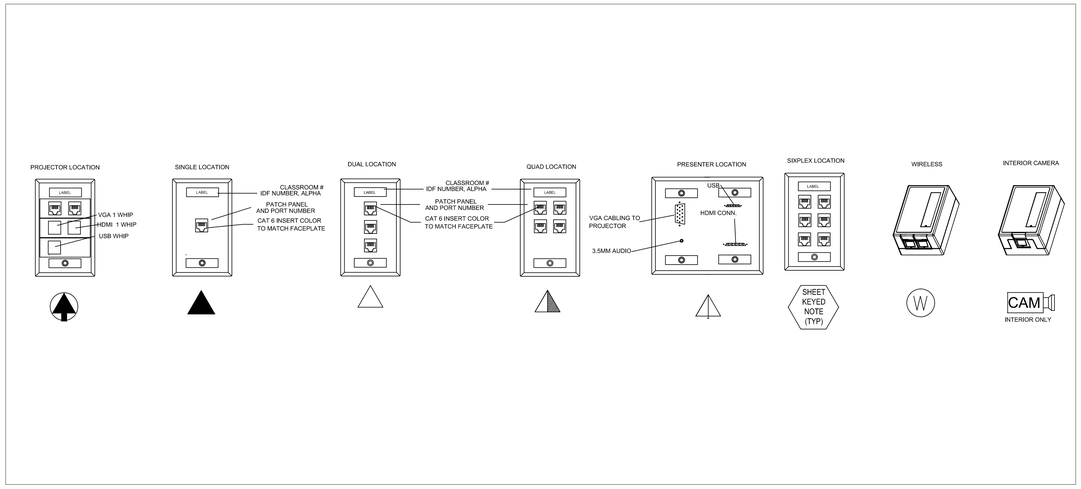

1 T701 TELECOM FACEPLATE DETAIL
NTS

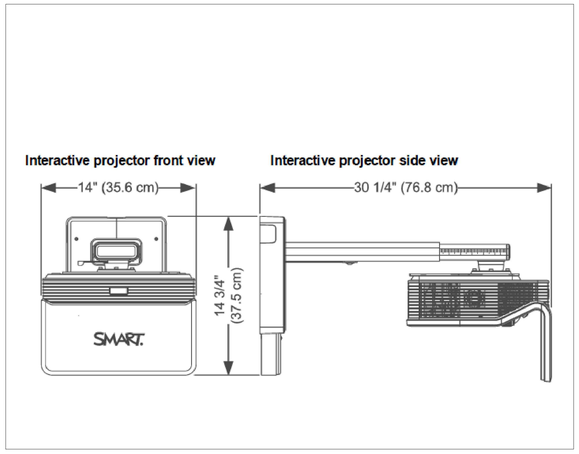

2 T701 AV DETAILS
NTS

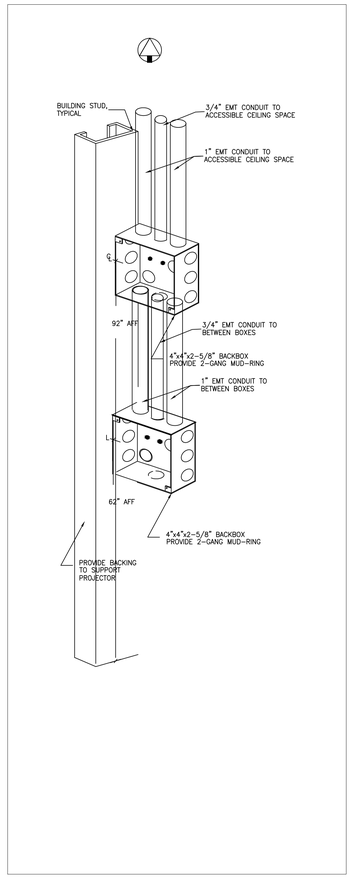

3 T701 AV RACEWAY
NTS

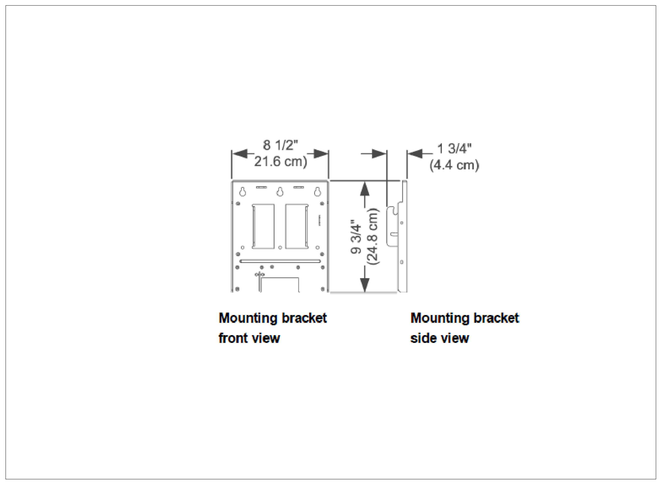

4 T701 SHORT THROW PROJECTOR MOUNT
NTS

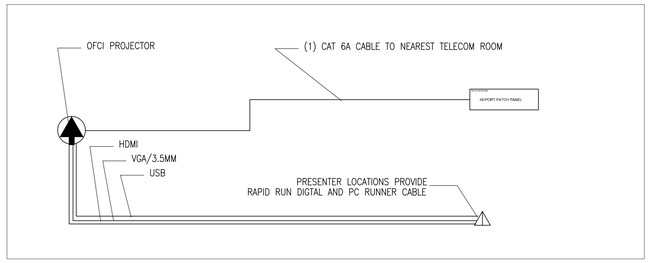

5 T701 AV DETAILS
NTS

GENERAL NOTE

1. PERFORM FIELD MOCKUP OF A SINGLE SHORT THROW PROJECTOR LOCATION TO VERIFY DIMENSIONS. THE DIMENSIONS LISTED ARE APPLICABLE TO THE EPSON 485W SHORT THROW PROJECTOR.

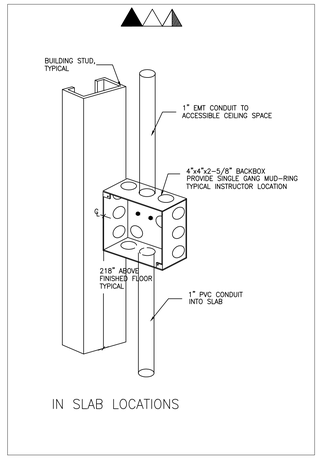

6 T701 PROJECTOR RACEWAY
NTS

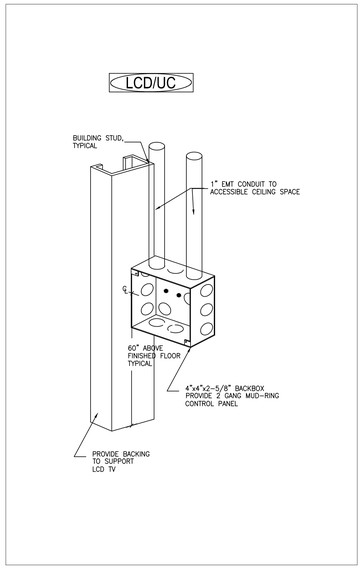

8 T701 UC DISPLAY RACEWAY
NTS

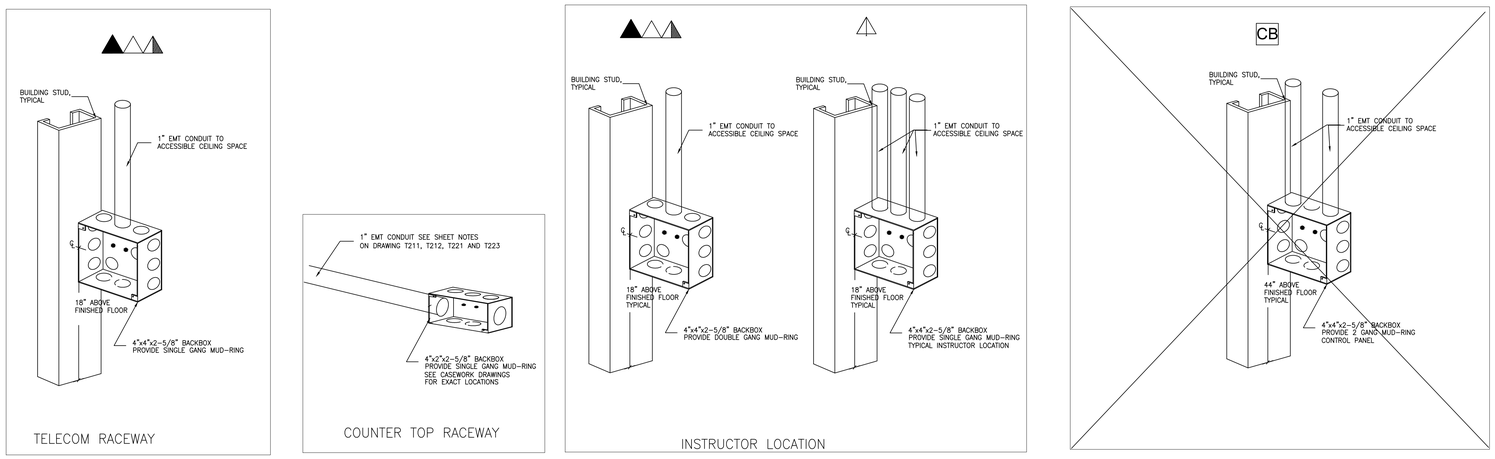

7 T701 TELECOMMUNICATIONS RACEWAY AND BACKBOXES
NTS

PIVOT ARCHITECTURE

BICSI
DARREN D. HERNANDEZ
REG. NO. 1416143
EXPIRES 12-31-14
SIGNATURE

NORTHWEST INFORMATION SERVICES
8285 SW NIMBUS, SUITE 125
BEAVERTON, OREGON 97008
PHONE:(503)246-8585 FAX:(503)246-8706

HOWARD RECONCILED SET
EUGENE SCHOOL DISTRICT
4J
4J W. BROADWAY ST. EUGENE, OREGON
HOWARD ELEMENTARY SCHOOL

TELECOM DETAILS

PROJECT #	1336
REVISIONS	
ISSUE DATE:	10/28/2014
DRAWN:	DDH
CHECKED:	JW

T701

© 2014 PIVOT ARCHITECTURE
PRINTED ON: 10/22/2014 6:48:50 AM FROM FILE: H:\EUGENESCHOOLDISTRICT\HOWARD\DRAWINGS\T701.DWG

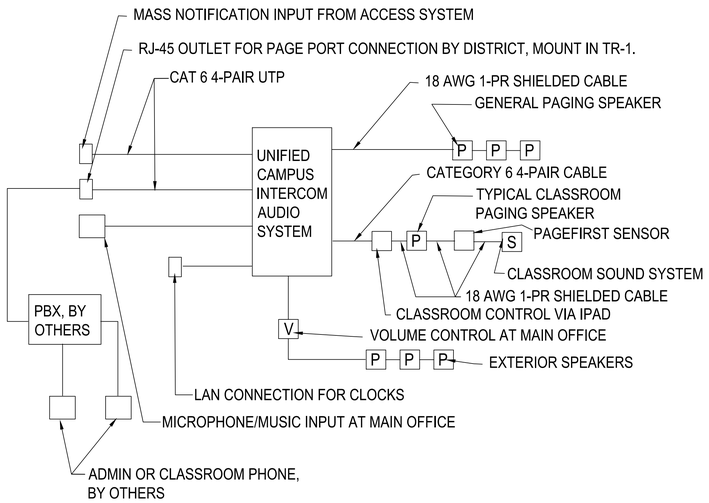

1 T702 PAGING/MASS NOTIFICATION LINE DIAGRAM
NTS

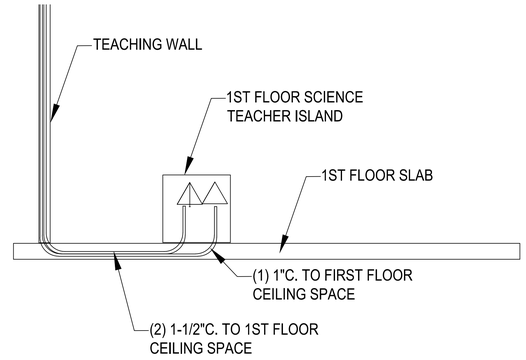

4 T702 LAB / ISLAND LOCATION RACEWAY 1ST FLOOR
NTS

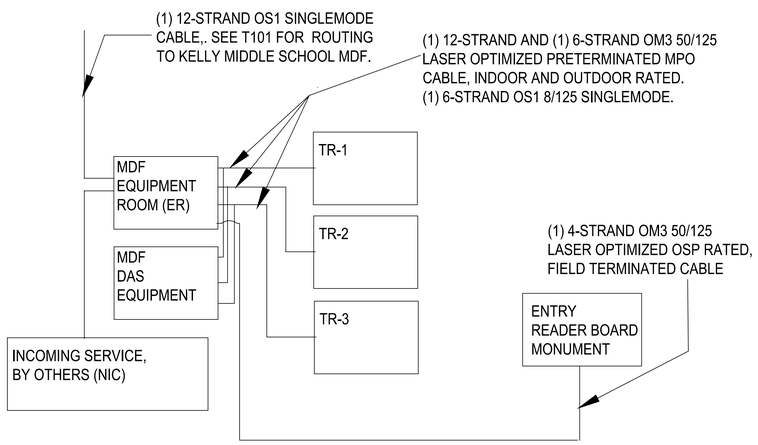

3 T702 FIBER RISER DIAGRAM
NTS

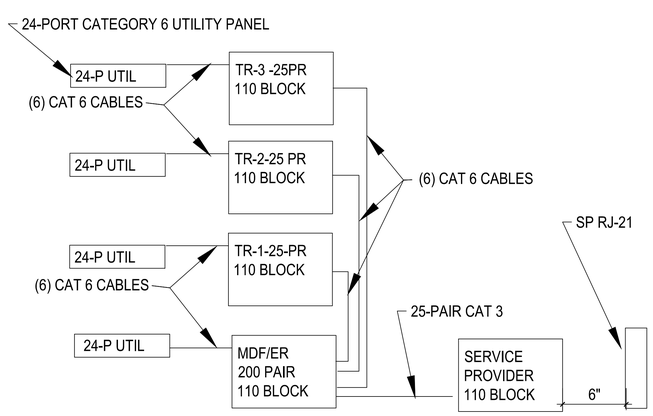

2 T702 COPPER RISER DIAGRAM
NTS

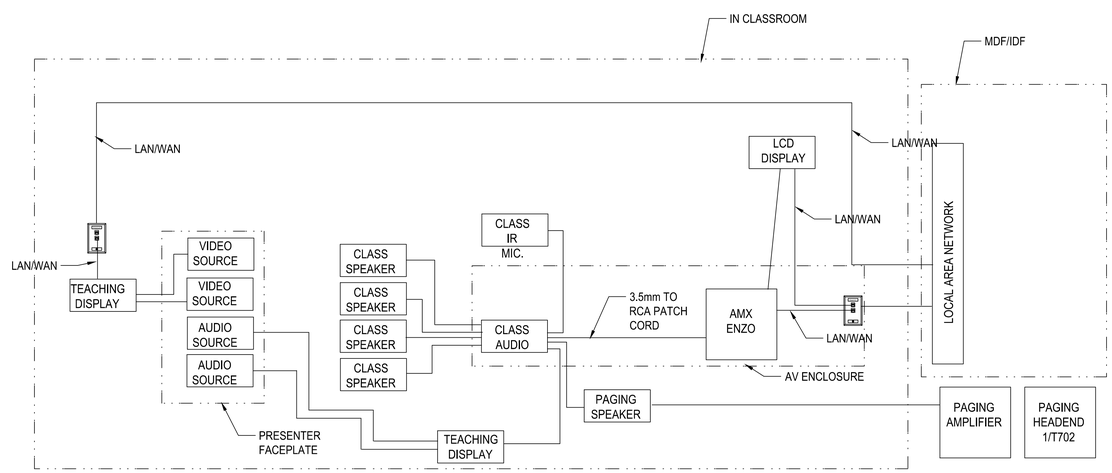

6 T702 CLASSROOM AV SINGLE LINE DIAGRAM
NTS

PIVOT ARCHITECTURE

BKSI
CHRISTOPHER G. HUNTSINGER
REG. NO. 14161451
EXPIRES 12-31-14
SIGNATURE

NORTHWEST INFORMATION SERVICES
8285 SW NIMBUS, SUITE 125
BEAVERTON, OREGON 97008
PHONE:(503)246-8585 FAX:(503)246-8706

HOWARD RECONCILED SET
EUGENE SCHOOL DISTRICT 4J
4J W. BROADWAY ST. EUGENE, OREGON
HOWARD ELEMENTARY SCHOOL

TELECOM DETAILS

PROJECT #	1356
ISSUE DATE:	10/28/2014
DRAWN:	DGH
CHECKED:	JW
REVISIONS:	

T702

© 2014 PIVOT ARCHITECTURE

PRINTED ON: 10/22/2014 6:48:50 AM FROM FILE: H:\EUGENESCHOOLDISTRICT\HOWARD\DRAWINGS\T702.DWG

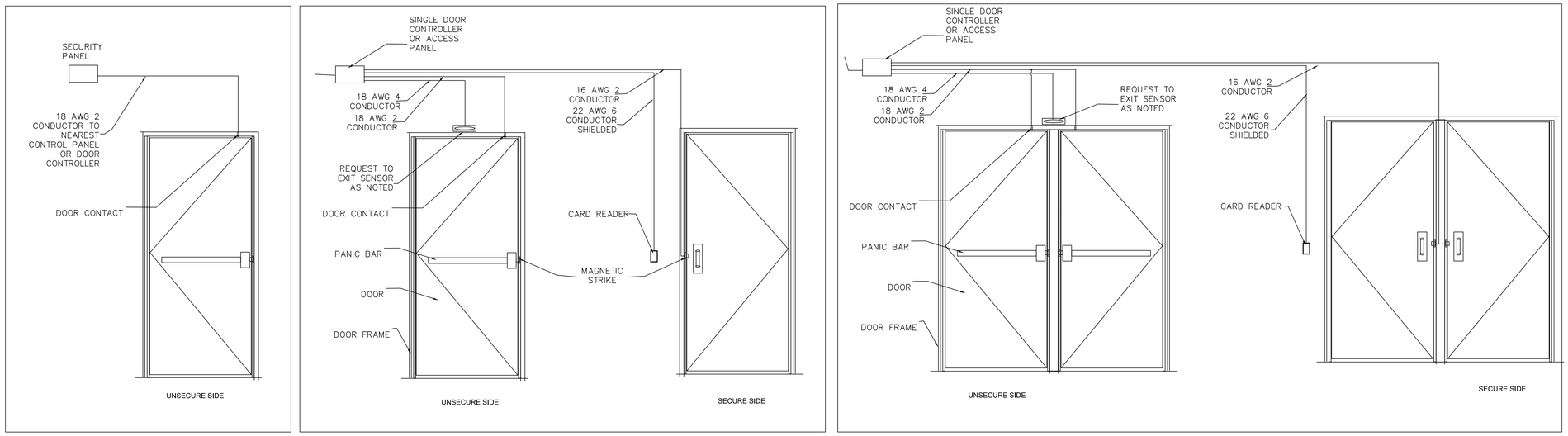

1 T703 DOOR SECURITY CABLE REQUIREMENTS – COORDINATE WITH DIVISION 8
NTS

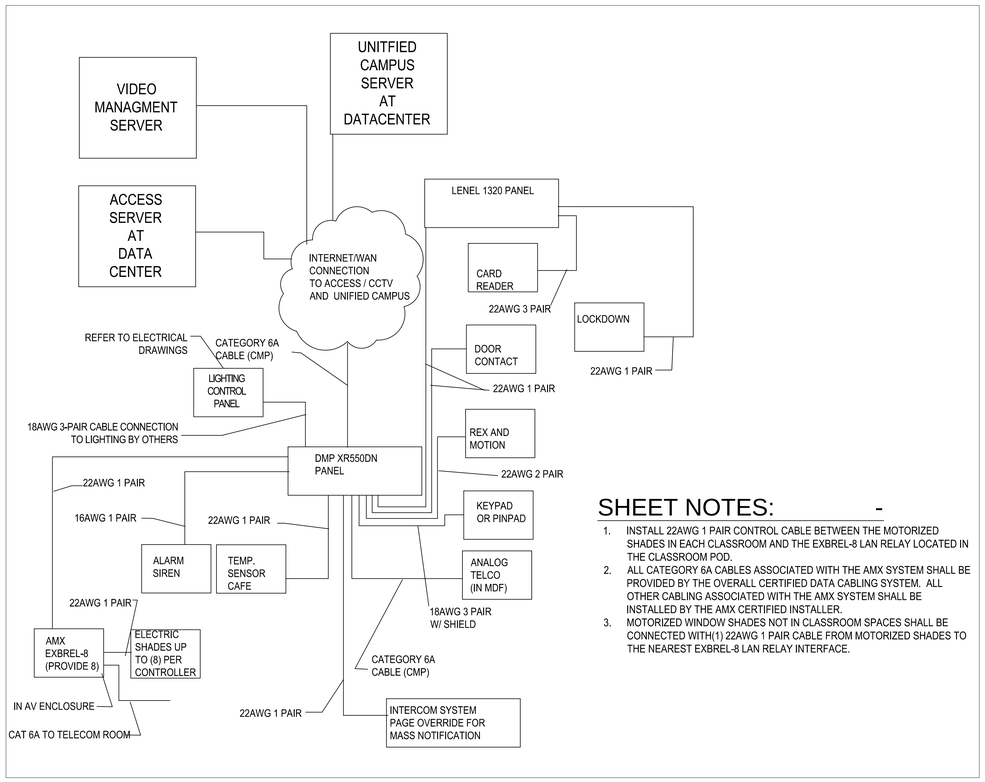

SHEET NOTES: -

1. INSTALL 22AWG 1 PAIR CONTROL CABLE BETWEEN THE MOTORIZED SHADES IN EACH CLASSROOM AND THE EXBREL-8 LAN RELAY LOCATED IN THE CLASSROOM POD.
2. ALL CATEGORY 6A CABLES ASSOCIATED WITH THE AMX SYSTEM SHALL BE PROVIDED BY THE OVERALL CERTIFIED DATA CABLING SYSTEM. ALL OTHER CABLING ASSOCIATED WITH THE AMX SYSTEM SHALL BE INSTALLED BY THE AMX CERTIFIED INSTALLER.
3. MOTORIZED WINDOW SHADES NOT IN CLASSROOM SPACES SHALL BE CONNECTED WITH(1) 22AWG 1 PAIR CABLE FROM MOTORIZED SHADES TO THE NEAREST EXBREL-8 LAN RELAY INTERFACE.

2 T703 DOOR SECURITY CABLE REQUIREMENTS – COORDINATE WITH DIVISION 8
NTS

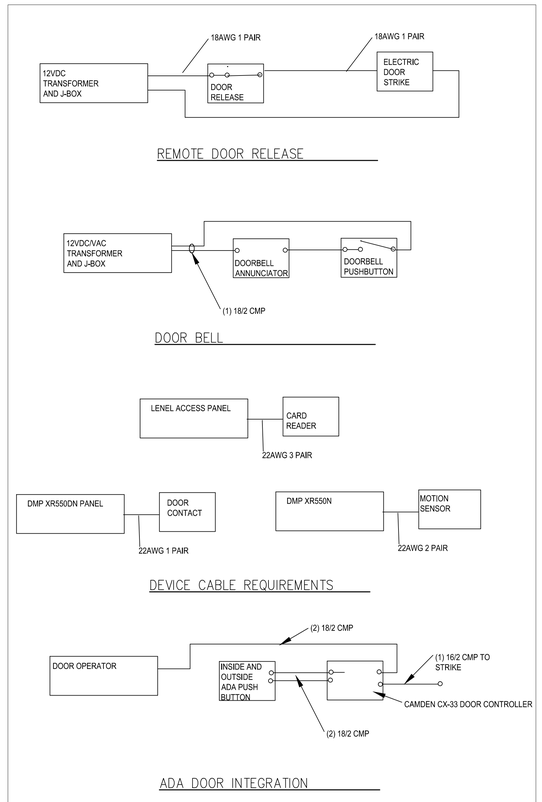

3 T703 SECURITY DEVICE CABLING
NTS

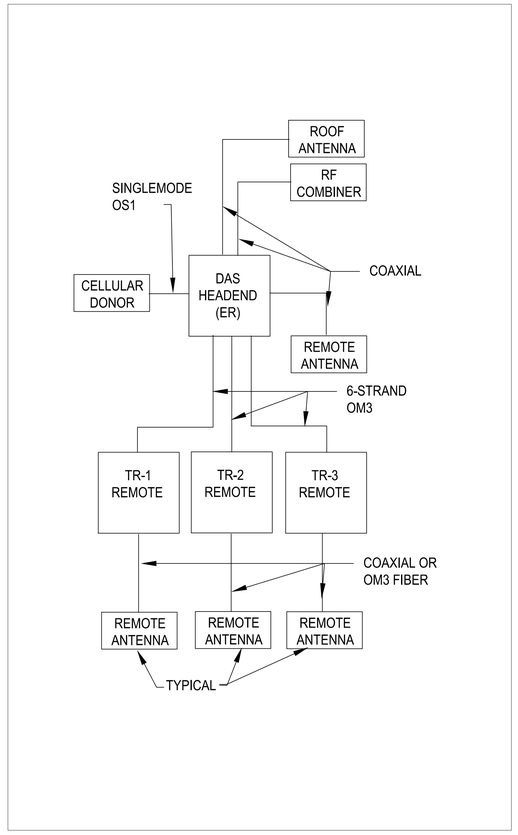

4 T703 DISTRIBUTED ANTENNA SYSTEM ONELINE
NTS

PIVOT ARCHITECTURE

BICSI Communications Distribution Designer
Darren D. Hedwick
Reg. No. 14161401
Expires 10-01-14
SIGNATURE

NORTHWEST INFORMATION SERVICES
8285 SW NIMBUS, SUITE 125
BEAVERTON, OREGON 97008
PHONE:(503)246-8585 FAX:(503)246-8706

HOWARD RECONCILED SET
EUGENE SCHOOL DISTRICT 4J
44 W. BROADWAY ST. EUGENE, OREGON
HOWARD ELEMENTARY SCHOOL

TELECOM DETAILS

PROJECT #	1336
ISSUE DATE:	10/28/2014
DRAWN:	EDH
CHECKED:	JW
REVISIONS:	

T703

© 2014 PIVOT ARCHITECTURE

PRINTED ON: 10/22/2014 6:48:50 AM FROM FILE: H:\EUGENESCHOOLDISTRICT\HOWARD\DRAWINGS\T703.DWG

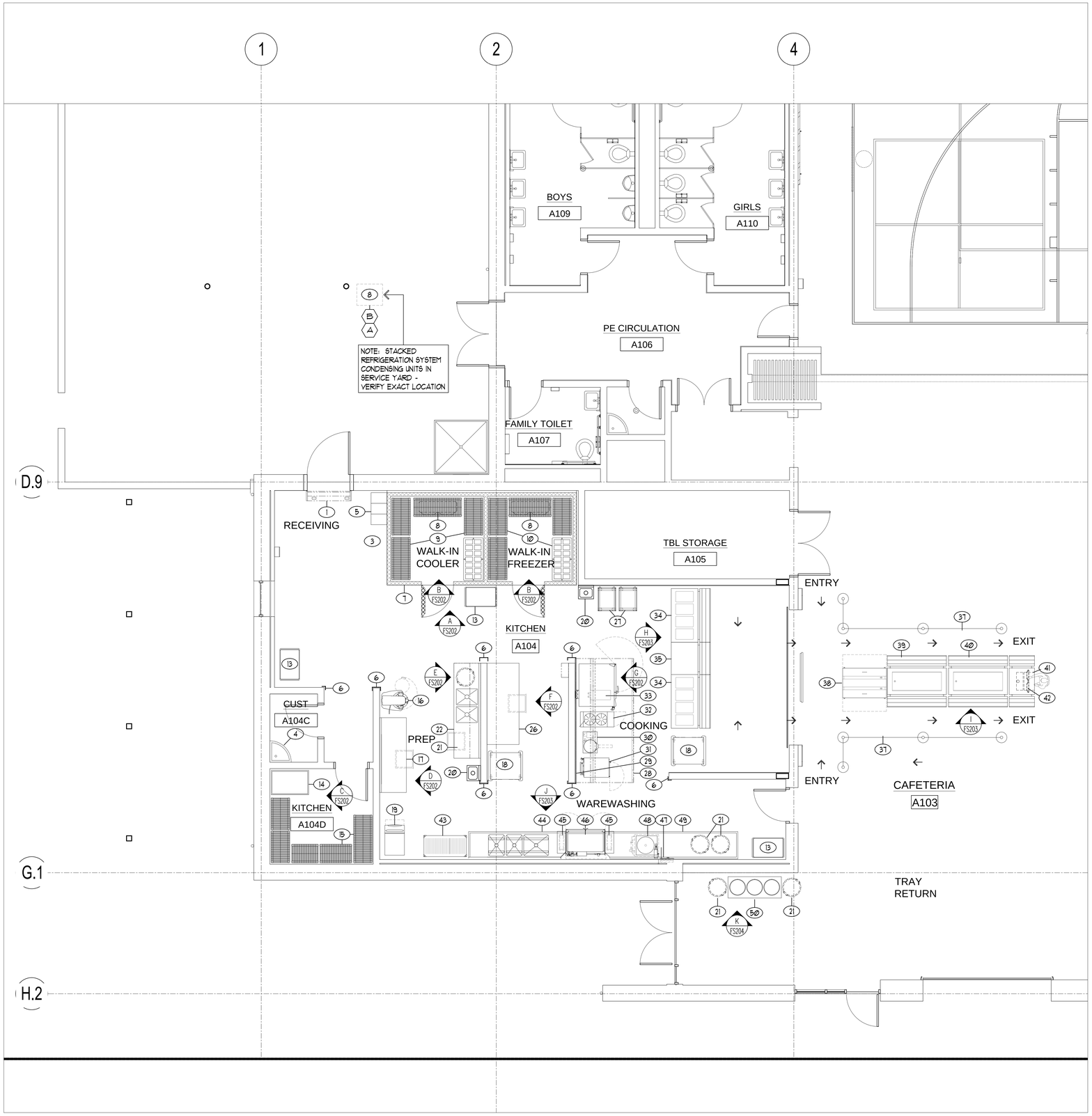

EQUIPMENT SCHEDULE

ITEM	DESCRIPTION	QUAN.	REMARKS:
1	AIR CURTAIN	1	---
2	NOT USED	---	---
3	NOT USED	---	---
4	JANITOR SINK	1	BY PLUMBING DIVISION
5	STAFF LOCKERS (HALF SIZE)	LOT	BY ARCHITECTURAL DIVISION
6	CORNER/CHANNEL GUARDS	LOT	---
7	WALK-IN COLD STORAGE ROOMS	2	---
8	REFRIGERATION SYSTEMS	2	---
9	WALK-IN COOLER SHELVING	LOT	---
10	WALK-IN FREEZER SHELVING	LOT	---
11	NOT USED	---	---
12	NOT USED	---	---
13	UTILITY CARTS	2	---
14	CAN RACK	1	---
15	DRY STORAGE SHELVING	LOT	---
16	30-QUART MIXER	1	---
17	SUPPORT WORK TABLE	1	---
18	MOBILE HEATED/PROOFING CABINETS	3	---
19	CUBE ICE MACHINE	1	---
20	HAND WASHING SINKS	2	---
21	MOBILE WASTE RECEPTACLES	6	---
22	VEGETABLE PREP SINK TABLE	1	---
23	NOT USED	---	---
24	NOT USED	---	---
25	NOT USED	---	---
26	WORK TABLE	1	---
27	SHEET PAN RACKS	2	---
28	CANOPY HOOD WITH FIRE PROTECTION SYSTEM	1	---
29	STAINLESS STEEL WALL FLASHING	LOT	---
30	20-GALLON TILTING KETTLE	1	---
31	CONVECTION STEAMER	1	---
32	OPEN BURNER COOK TOP	1	---
33	DOUBLE STACK COMBI-OVEN STEAMERS	1	---
34	HOT FOOD SERVING STATIONS	2	---
35	FLAT TOP SERVING STATION	1	---
36	NOT USED	---	---
37	PORTABLE TRAFFIC CONTROL RAILINGS	LOT	---
38	MOBILE DOUBLE-SIDED MILK COOLER	1	---
39	MOBILE DOUBLE-SIDED REFRIGERATED SALAD BAR	1	---
40	MOBILE DOUBLE-SIDED FRUIT/VEGIE BAR	1	---
41	MOBILE DOUBLE-SIDED CASHIER COUNTER	1	---
42	POINT OF SALE SYSTEM	1	BY OWNER
43	MOBILE POT & PAN SHELVING	1	---
44	CLEAN DISHTABLE WITH POTWASHING SINKS	1	---
45	WAREWASHER VAPOR EXHAUST DUCTS	2	---
46	WAREWASHER WITH BOOSTER HEATER	1	---
47	HOSE REEL WITH RECESSED CONTROL CABINET	1	---
48	WASTE COLLECTOR	1	---
49	SOILED DISHTABLE	1	---
50	MOBILE TRAY/TRASH/RECYCLING COUNTERS	2	---

PIVOT ARCHITECTURE

HALLIDAY ENGINEERING
88 E. 7th AVENUE
EUGENE, OREGON 97401
PHONE: 541-344-6453
FAX: 541-344-6457
WWW.HALLIDAYENGINEERING.COM

HOWARD RECONCILED SET
EUGENE SCHOOL DISTRICT
44 W. BROADWAY ST. EUGENE, OREGON
HOWARD ELEMENTARY SCHOOL

Food Service Equipment Plan

PROJECT #:	1336
ISSUE DATE:	10/28/2014
DRAWN:	SH
CHECKED:	LB
REVISIONS:	

FS101

© 2014 PIVOT ARCHITECTURE

PRINTED ON: 4/10/2014 6:48:50 PM FROM FILE: S:\2013\1336-4J_Howard_Elementary_School\Drawings\Revit\1336_HES_ARCH_Bldg_14.rvt

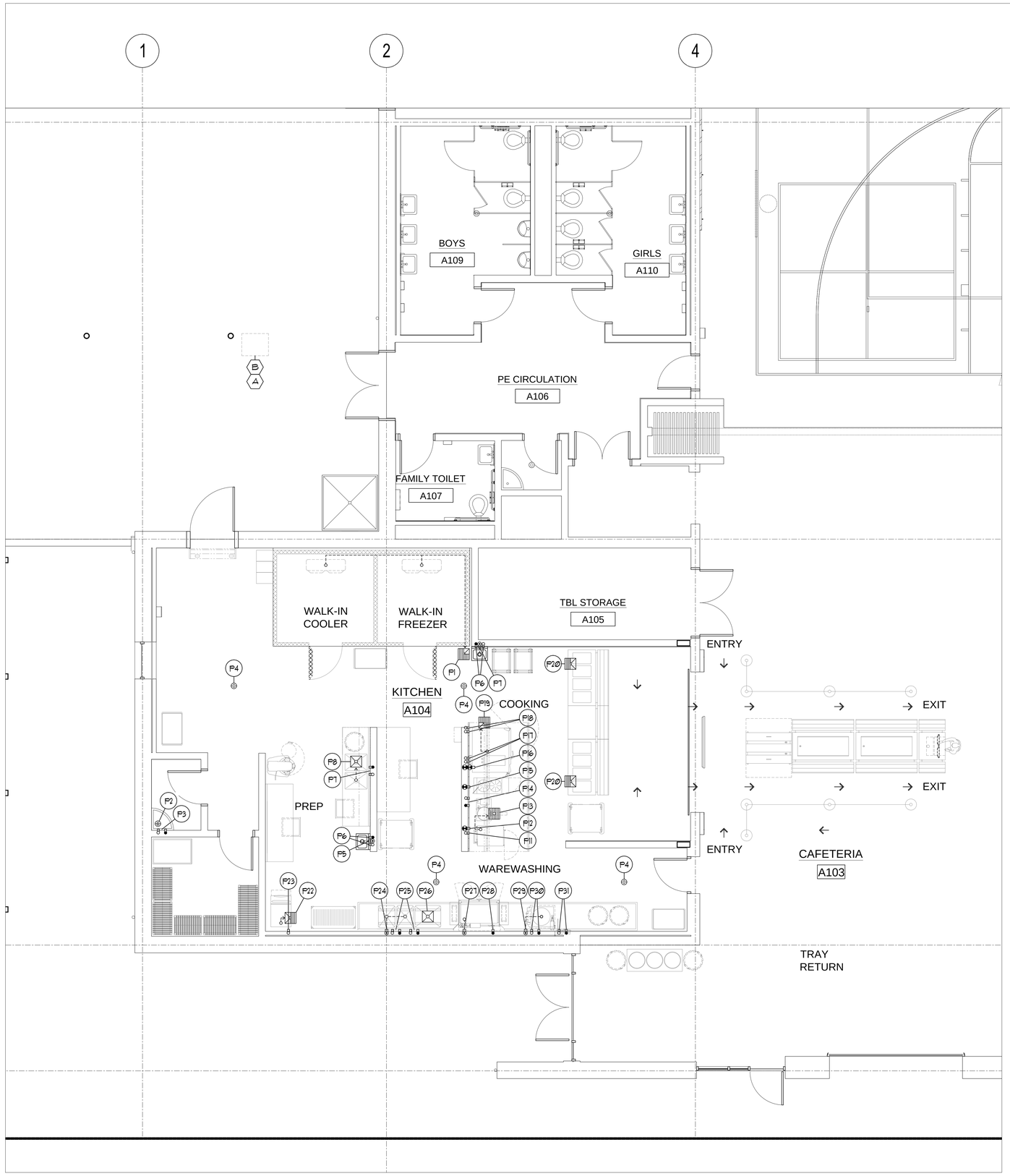

PLUMBING SCHEDULE

ITEM NO.	P. NO.	SIZE	DESCRIPTION	LOCATION	HEIGHT	SERVICE TO :	REMARKS:
8	P1	12" x 12"	FLOOR SINK	FLOOR	0"	WALK-IN EVAPORATOR DRAINS	THREE-QUARTERS GRATE
4	P2	---	FLOOR DRAIN	---	---	JANITOR SINK	REQUIREMENTS BY DIVISION 22
4	P3	---	HOT & COLD	---	---	JANITOR SINK	REQUIREMENTS BY DIVISION 22
---	P4	---	FLOOR DRAIN	FLOOR	-1/2"	AREA DRAIN	---
20	P5	1/2"	HOT & COLD	WALL	22"	HAND WASHING SINK	---
20	P6	1 1/2"	WASTE	WALL	20"	HAND WASHING SINK	---
22	P7	1/2"	HOT & COLD	WALL	20"	SINK FAUCET	2.0 GPM HOT
22	P8	12" x 12"	FLOOR SINK	FLOOR	0"	(2) SINK DRAINS	NO GRATE
---	P9	---	NOT USED	---	---	---	---
---	P10	---	NOT USED	---	---	---	---
31	P11	3/4"	COLD	WALL	39"	CONVECTION STEAMER	INTERCONNECT TO WATER FILTRATION SYSTEM
31	P12	1/2"	GAS	WALL	37"	CONVECTION STEAMER	54M BTU TOTAL- QUICK DISCONNECT
30	P13	12" x 12"	FLOOR SINK	FLOOR	0"	20-GALLON TILTING KETTLE AND	CONVECTION STEAMER FULL GRATE W/CENTER OPENING
30	P14	1/2"	HOT & COLD	WALL	24"	KETTLE PANTRY FAUCET	10 GPM HOT
32	P15	3/4"	GAS	WALL	34"	OPEN BURNER COOK TOP	70M BTU TOTAL- QUICK DISCONNECT
33	P16	3/4"	GAS (STACKED)	WALL	12" / 47"	DOUBLE STACK COMBI-OVEN STEAMERS	91M BTU EACH CONNECTION - QUICK DISCONNECT
33	P17	3/4"	COLD	WALL	6" / 41"	DOUBLE STACK COMBI-OVEN STEAMERS	FOR CONDENSER
33	P18	3/4"	COLD	WALL	6" / 41"	DOUBLE STACK COMBI-OVEN STEAMERS	INTERCONNECT TO WATER FILTRATION SYS. FOR GENERATORS
33	P19	12" x 12"	FLOOR SINK	FLOOR	0"	DOUBLE STACK COMBI-OVEN STEAMERS	HALF GRATE
34	P20	12" x 12"	FLOOR SINK	FLOOR	0"	HOT FOOD SERVING STATION	HALF GRATE
---	P21	---	NOT USED	---	---	---	---
19	P22	12" x 12"	FLOOR SINK	FLOOR	0"	CUBE ICE MACHINE	HALF GRATE
19	P23	1/2"	COLD	WALL	40"	CUBE ICE MACHINE	---
44	P24	2"	WASTE	WALL	14"	(2) SINK DRAINS	---
44	P25	1/2"	HOT & COLD	WALL	20"	SINK FAUCETS	2.0 GPM HOT
44	P26	12" x 12"	FLOOR SINK	FLOOR	0"	(1) SINK DRAIN	NO GRATE
46	P27	2"	WASTE	WALL	8"	WAREWASHER WITH BOOSTER HEATER	---
46	P28	1/2"	HOT @ 10*	WALL	64"	WAREWASHER WITH BOOSTER HEATER	126 GPM HOT @ 20 PSI
48	P29	3/4"	HOT & COLD	WALL	18"	WASTE COLLECTOR	50 GPM HOT
48	P30	2"	WASTE	WALL	7"	WASTE COLLECTOR	---
47	P31	1/2"	HOT & COLD	WALL	78"	HOSE REEL WITH RECESSED CONTROL CABINET	40 GPM HOT

PLUMBING NOTES

1. THIS DRAWING IS NOT TO BE USED FOR ESTABLISHING ROUGH-IN LOCATIONS. REFER TO DIMENSIONED DRAWINGS PREPARED BY THE KITCHEN EQUIPMENT CONTRACTOR.
2. UNDER PLUMBING WORK OF DIVISION 15, MAKE ALL ROUGH-INS AND FINAL CONNECTIONS IN CONFORMANCE WITH LOCAL CODES. PROVIDE SUPPLY SHUT-OFF VALVES WITH PERMANENT NAME TAGS IDENTIFYING SUPPLY LINES TO EACH INDIVIDUAL PIECE OF EQUIPMENT. INCLUDE TRAPS, TAIL PIECES, AND LINE STRAINERS AS REQUIRED.
3. UNDER PLUMBING WORK OF DIVISION 15, FURNISH AND INSTALL ALL FLOOR SINKS AND AREA DRAINS FLUSH WITH FINISHED FLOOR.
4. UNDER PLUMBING WORK OF DIVISION 15, FURNISH AND INSTALL GREASE TRAP OR INTERCEPTOR AS REQUIRED.
5. UNDER PLUMBING WORK OF DIVISION 15, FURNISH AND INSTALL ALL SINK WASTE LINES. USE COPPER TUBING UNEXPOSED & PAINTED WHERE LINES ARE VISIBLE. NO PVC PIPING IS ACCEPTABLE.
6. UNDER KITCHEN EQUIPMENT WORK OF DIVISION 11, FURNISH AND INSTALL ALL INDIRECT WASTE LINES FROM EQUIPMENT LOCATED AT CUSTOM COUNTERS. USE COPPER TUBING & PAINT VISIBLE LINES. NO PVC PIPING IS ACCEPTABLE.
7. UNDER KITCHEN EQUIPMENT WORK OF DIVISION 11, PROVIDE FAUCETS AT EQUIPMENT. UNDER PLUMBING WORK OF DIVISION 15, INSTALL & CONNECT FAUCETS.
8. UNDER PLUMBING WORK OF DIVISION 15, FURNISH AND INSTALL CHROME PLATED VACUUM BREAKERS OR BACK/SYPHONING DEVICES ON SUPPLY LINES TO EQUIPMENT AS REQUIRED BY CODES.
9. UNDER PLUMBING WORK OF DIVISION 15, FURNISH AND INSTALL STAINLESS STEEL OR CHROME PLATED ESCUTCHEON PLATES FOR ALL WATER LINES PENETRATING COUNTER TOPS AND BACK SPLASHES.
10. UNDER PLUMBING WORK OF DIVISION 15, FURNISH PRESSURE REDUCING VALVE FOR ALL GAS, STEAM, & WATER LINES. MAXIMUM WATER PRESSURE AT BOOSTER HEATER & DISHWASHER SHALL BE 20 PSI.
11. UNDER KITCHEN EQUIPMENT WORK OF DIVISION 11, FURNISH & INSTALL WALK-IN COLD STORAGE ROOM EVAPORATOR COPPER DRAIN LINES. TRAP AT OUTLET END.
12. UNDER PLUMBING WORK OF DIVISION 15, PROVIDE 140 DEGREE HOT WATER SUPPLY AT DISHWASHER/ BOOSTER HEATER AS SHOWN. VERIFY REQUIRED TEMPERATURE FOR SUPPLY AT SINK FAUCETS WITH LOCAL AND NATIONAL CODES.
13. UNDER PLUMBING WORK OF DIVISION 15, FURNISH AND INSTALL A SOLENOID VALVE ON PRIMARY GAS SUPPLY TO SHUT OFF EQUIPMENT DURING FIRE SYSTEM ACTIVATION. SOLENOID SHALL BE ACCESSIBLE FOR SERVICING, TESTING, AND RESETTING IN THE EVENT OF SYSTEM ACTIVATION.
14. SEE PLUMBING AND MECHANICAL DRAWINGS FOR ADDITIONAL REQUIREMENTS.

PLUMBING SYMBOL LEGEND

- COLD WATER
- HOT WATER
- WASTE
- GAS
- FLOOR DRAIN
- FLOOR SINK

PVOT ARCHITECTURE

HALLIDAY ENGINEERING
88 E. 27th AVENUE
EUGENE, OREGON 97405
541-344-8263
FAX NO. 541-344-8267
www.halliday-eng.com

HOWARD RECONCILED SET
EUGENE SCHOOL DISTRICT
4J
44 W. BROADWAY ST. EUGENE, OREGON
HOWARD ELEMENTARY SCHOOL

Food Service Pumbing Plan

PROJECT #	1336
ISSUE DATE:	10/30/2014
DRAWN:	SH
CHECKED	LB
REVISIONS:	

FS102

© 2014 PIVOT ARCHITECTURE

PRINTED ON: 4/19/2014 6:48:50 PM FROM FILE: S:\2013\1336-4j_Howard_Elementary_School\Drawings\Revit\1336_HES_ARCH_Bldg_14.rvt

© 2014 PIVOT ARCHITECTURE

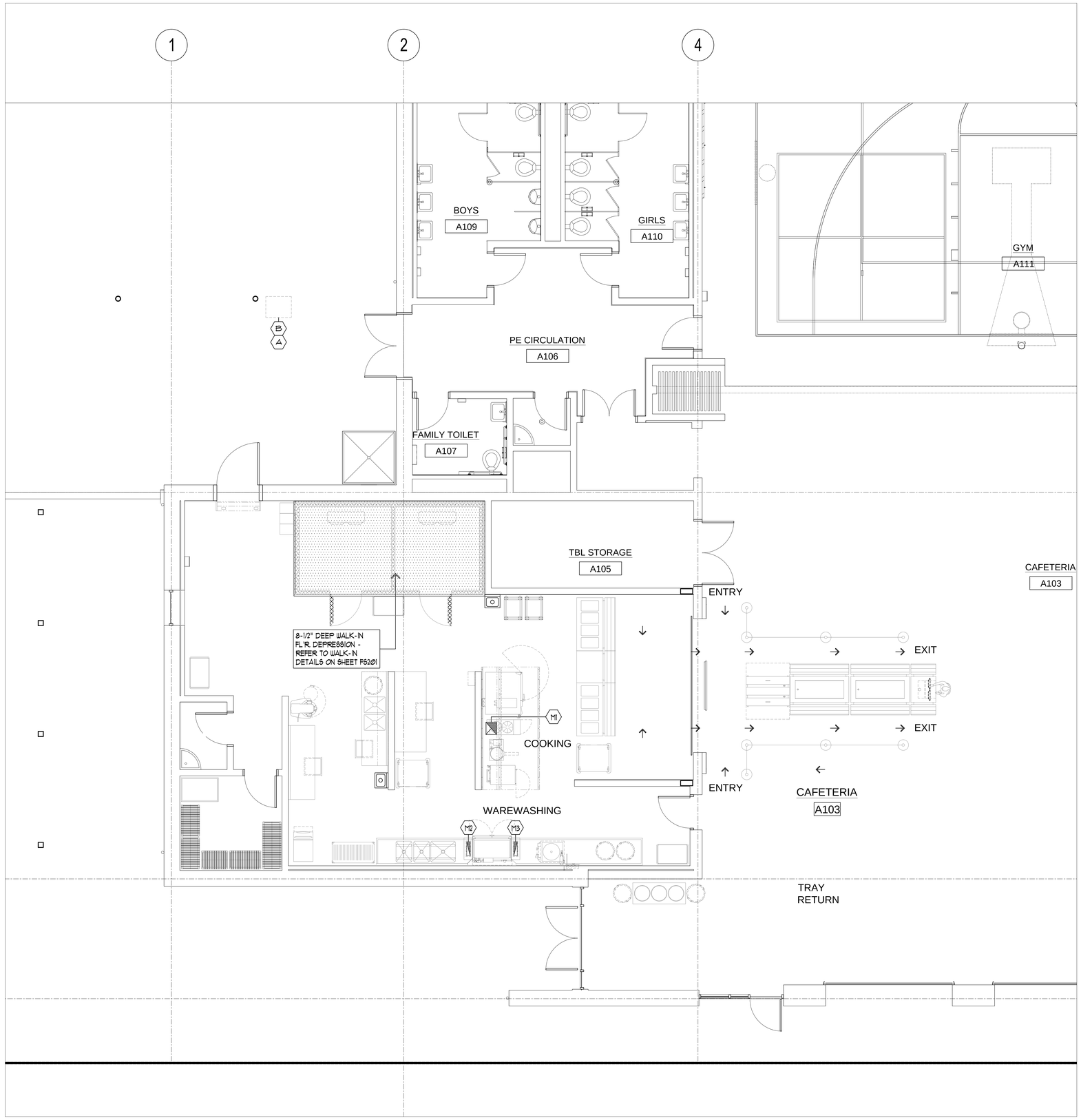

MECHANICAL NOTES

M1. ONE (1) 12" X 14" TYPE I EXHAUST DUCT CONNECTION AT CANOPY HOOD. 1120 CFM WITH Ø.56" STATIC PRESSURE AT DUCT COLLAR.

M2. ONE (1) 4" X 16" EXHAUST DUCT CONNECTION AT WAREWASHER UNLOAD END. 400 CFM WITH .25" STATIC PRESSURE AT DUCT COLLAR.

M3. ONE (1) 4" X 16" EXHAUST DUCT CONNECTION AT WAREWASHER LOAD END. 200 CFM WITH .25" STATIC PRESSURE AT DUCT COLLAR.

DEPRESS./MECHANICAL SYMBOL LEGEND

EXHAUST DUCT

FLOOR DEPRESSION

PIVOT ARCHITECTURE

HALLIDAY
ENGINEERING
88 E. 27th AVENUE
EUGENE, OREGON 97405
541-342-8687
FAX 541-342-8693
WWW.HALLIDAYENGINEERING.COM

HOWARD RECONCILED SET
EUGENE SCHOOL DISTRICT
44 W. BROADWAY ST. EUGENE, OREGON
HOWARD ELEMENTARY SCHOOL

Food Service Mechanical Plan

PROJECT #	1336
ISSUE DATE:	10/30/2014
DRAWN:	SH
CHECKED:	LB
REVISIONS:	

FS103

PRINTED ON: 4/19/2014 6:48:50 PM FROM FILE: S:\2013\1336-4j_Howard_Elementary_School\Drawings\Revit\1336_HES_ARCH_Bldg_14.rvt

© 2014 PIVOT ARCHITECTURE

GENERAL NOTES FOR NON-WATER WASH VENTILATORS

ELECTRICAL

1. Locate Fan Start/Stop Switch in a convenient location. Refer to the wiring diagram for required voltage.
2. If ventilators are equipped with light fixtures, provide a separate light circuit to the ventilator as shown on electrical plan.

EXHAUST VOLUME REQUIREMENTS

3. Exhaust Volumes as shown on the drawings are determined by established Gaylord engineering methods and in accordance with the terms of the ventilator's listing. These air volume levels require that the make-up air be brought into the space in such a way that it does not negatively affect the ventilator. See the Make-up Air Requirements and the "Typical Design" drawing.
4. Ventilator static pressure is noted on each ventilator plan view. Total duct system and other external static's must be added to the ventilator static for determining the total system static pressure drop. Static based on operation at mean sea level at 75°F kitchen ambient.

MAKE-UP AIR REQUIREMENTS

5. Make-up air is critical to the performance of the ventilator.
6. The total amount of make-up air (supply air) brought into the kitchen must be between 90% and 100% of the total exhaust volume. It should be brought in throughout the kitchen evenly for best results. See the "Typical Design" drawing.

AIR FLOW RATES

7. Exhaust and Supply Air Flow Rates were established under controlled laboratory conditions. Greater Exhaust and/or lesser Supply Air Flows may be required for complete vapor removal in specific installations.

INSTALLATION

8. Ventilators to be installed in accordance with NFPA-96 and all other local applicable codes. Contractors must review applicable codes with code authorities before approving drawings for fabrication. Special attention must be given to code regulations relative to clearances from surrounding combustible and limited combustible construction (walls, ceiling, etc.).
9. Ventilators manufactured in multiple sections are factory pre-wired to a single connection point. Ventilator wiring is disconnected for shipment to be reconnected by electrical contractor.
10. Ventilators manufactured in multiple sections may have drains factory interconnected (see drawing) to a single outlet point. Ventilator plumbing is disconnected for shipment to be reconnected by plumbing contractor.
11. All ductwork beyond the ventilator duct take-off collar to be provided and installed by others, in accordance with applicable codes. Exhaust ducts must be continuously welded liquid tight.
12. All ventilators are equipped with hanging brackets. Hanging rods to be supplied by ventilator installer. Hanging weight of the ventilator(s) is noted on each drawing.
13. Ventilators manufactured in multiple sections are provided with bolts, clips, and all necessary hardware for reconnecting by the ventilator installer.

CONSTRUCTION

14. Ventilators are manufactured in strict accordance with Gaylord specifications.
15. Ventilators constructed of 18 Ga. stainless steel, Type 300 series, No. 4 finish unless otherwise noted on drawings.

FIRE EXTINGUISHING SYSTEM

16. Fire extinguishing system to be installed in accordance with NFPA-96. Refer to "FIRE PROTECTION SYSTEM NOTES" for information on supplier and installation.
17. Caution: Fire extinguishing system piping installed on the ventilator at job site should be coordinated with Gaylord to ensure piping does not interfere with the ventilator's operation/performance. Improper installation may void the Listings of the ventilator.
18. IMPORTANT NOTE: NFPA-96 requires that all gas and electric cooking equipment, that is protected by surface fire protection, must automatically shut off upon activation of the fire extinguishing system.
19. IMPORTANT NOTE: Most building departments require separate hood and fire protection permits prior to installation. The hood permit is typically obtained through the plan review department and the fire protection permit from the fire prevention bureau. It is the responsibility of the installing contractor to check with local building departments for their requirements and to obtain necessary permits.

LIGHTING

20. Light fixtures in ventilators will provide less than 30 foot candles of light at the cooking surface as a standard, unless otherwise noted on Section View. Confirm if this amount of light is acceptable with local health codes.

SPACE CONDITIONS IN HOT AND HUMID CLIMATES / STEAM COOKING EQUIPMENT

Gaylord recommends the kitchen temperature be kept between 74°F to 79°F with a dew point not exceeding 55°F to prevent excess condensation and or dripping in the hood over heavy steam producing equipment such as Steamers, Kettles, Dim Sum Counters, etc. If this is not possible, please consult the factory for increased air volume levels to prevent condensation buildup and potential dripping. Please refer to ASHRAE STD's 62.1-2010, 55-2010, and "The ASHRAE Guide for Buildings in Hot & Humid Climates" to address occupancy comfort and reduce the growth of pathogenic or allergenic organisms. It should be noted that exceeding these values can result in increased potential for unsanitary conditions.

THE GAYLORD VENTILATOR TESTING, LISTING AND COMPLIANCE REFERENCES:

IMPORTANT NOTE: Gaylord Ventilators are designed to meet the National codes listed below. Local codes may vary. Gaylord Industries must be notified in writing of local codes that may affect the ventilator design.

NATIONAL FIRE PROTECTION ASSOCIATION
The exhaust ventilator meets all requirements of the latest edition of NFPA-96.

NATIONAL SANITATION FOUNDATION
The exhaust ventilator is NSF listed to:
Standard #2 - "Food Service Equipment"

INTERNATIONAL & UNIFORM MECHANICAL CODE
The exhaust ventilator meets all requirements of IMC and UMC.

UNDERWRITERS LABORATORIES, INC.
The exhaust ventilator is UL Listed. *

INTERTEK TESTING SERVICES
The exhaust ventilator is ETL Listed. *

* UL and ETL listed exhaust ventilators are tested to standard: UL 710 - "Exhaust Hoods for Commercial Cooking Equipment".

Intertek

APPROVAL NOTICE

Prior to releasing the ventilator for fabrication, this drawing must be signed by an authorized representative of the company ordering the equipment and returned to GAYLORD INDUSTRIES. By approving these drawings, the company ordering the equipment agrees to the general notes, accepts the equipment as shown, and has verified the following have been checked:

IMPORTANT NOTICE

1. All dimensions such as duct size and location, drain and hot water location, ceiling height, overall size of ventilator, clearances to beams and other obstructions.
2. The location of the cooking equipment in relation to the ventilator is correct as shown for proper placement of the surface fire protection nozzles.

APPROVED FOR FABRICATION

Any changes in cooking equipment location, necessitating the relocation of the surface fire protection nozzles must be brought to the attention of GAYLORD INDUSTRIES in writing, prior to the kitchen being turned over to operating personnel.

☐ Revise and Resubmit

☐ Without changes
☐ With changes as shown

Signature Date

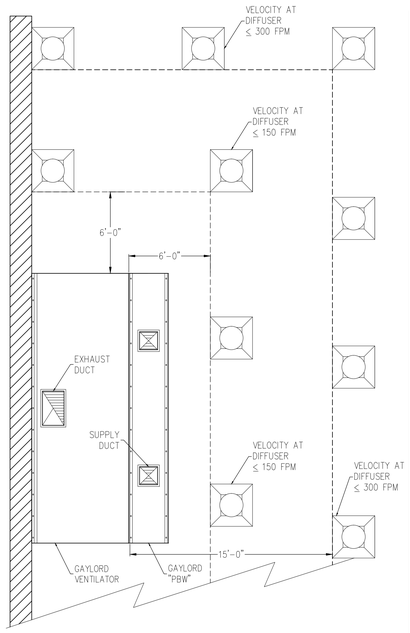

Gaylord Capture Performance Guarantee

Gaylord warrants the Capture Performance of the ventilator, only if the Exhaust Air Volumes are correct, per the Exhaust Air Volume Guidelines, and the Make-up Air Volumes are correct and the make-up air is delivered correctly, per the Make-up Air Delivery Guidelines as stated below.

Exhaust Air Volume Guidelines:

1. The amount of air exhausted by the Gaylord Ventilator shall be between 100% and 110% of the values shown on the Plan View for the Exhaust Ducts for each ventilator

Make-up Air Delivery Guidelines:

1. Gaylord "PBW" Plenum boxes shall be included for each ventilator
2. The amount of make-up air delivered through the Gaylord "PBW" plenum boxes shall be between 90% and 100% of the values shown on the Plan View for the Supply Ducts for each ventilator
3. The make-up air delivered using Gaylord "PBW" plenum boxes shall not exceed 60% of the exhaust volume of the ventilator
4. Ceiling diffusers shall be at least 6'-0" from all sides of the ventilator and the velocity at the diffuser shall not exceed 150 Feet per Minute (FPM)
   OR
   Ceiling diffusers shall be 15'-0" from all sides of the ventilator and the velocity at the diffuser shall not exceed 300 Feet per Minute (FPM)
5. The maximum velocity of the make-up air from Transfer Air, Diffusers, etc. shall not exceed 75 FPM at the ventilator lip
6. Cross drafts from pass through windows, hallways, or other openings shall not exceed 50 FPM
7. All forms of make-up air introduction (PBW, Transfer Air, Diffusers, etc.) must be evenly distributed around each ventilator to prevent unequal pressurization
8. Kitchen pressurization shall not exceed -0.02"W.G. relative to the dining or adjacent spaces, as stated in NFPA-96 and ASHRAE Standard 154
9. For more information on acceptable methods of Make-up Air Delivery reference ASHRAE Standard 154.

Following these guidelines will result in proper capture and containment at the ventilator and enact the Gaylord Capture Performance Guarantee. If jobsite conditions cannot accommodate these guidelines, consult factory for alternative design.

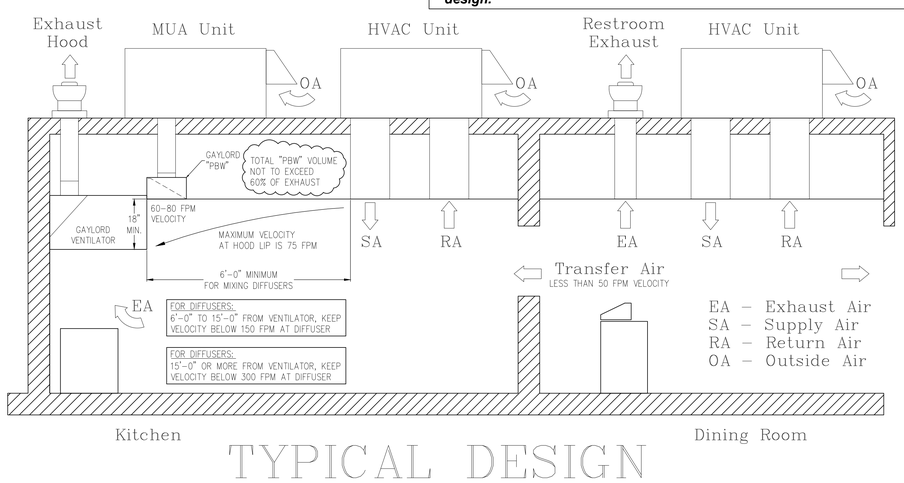

TYPICAL DESIGN

DIMENSION TOLERANCE ± 1/4" (6mm)

MODEL #	ITEM #	WORK ORDER #

DRAWN BY:	CHECKED BY:	ELECT. CHECK:	F.P. CHECK:	S.E. APPROVAL:
RS				

4-J HOWARD

Lane County, OR

PRELIMINARY ENGINEERING

DRAWING NO.:	DATE:		REV:	SHEET NO.:
14-0799	06-24-14			1 of

GAYLORD®

INSTALLATION INFORMATION

REV	DRWN.BY	DATE	REVISIONS	CHECKED BY

This plan is made from available information, but measurements are to be verified by contractors, installers and others in connection with this job. Gaylord Industries accepts no responsibility for work done by contractors, installers and others, and will not stand any expense for changes made necessary by local building codes, ordinances, structural conditions or by the substitution or changes in equipment shown in this plan. This plan must be verified and approved by proper parties before fabrication can be started and approval shall not be made unless contractors, installers and others have reviewed applicable codes with code authorities. Reference is made to the general notes, which are a part of these plans and all contractors, installers and others utilizing these plans are advised they are responsible for examining and becoming familiar with said general notes before commencing any work hereunder. Any inconsistencies between these plans and the general notes, or between these plans, the general notes, and local building codes or ordinances must be immediately called to the attention of Gaylord Industries in writing so that any such inconsistencies can be resolved. Gaylord Industries must be notified of any changes made to the plan in a clear and conspicuous manner. Gaylord Industries will not be responsible for any incidental or consequential damages incurred by others as a result of contractors, installers and others failure to notify Gaylord of changes to the plan.

ATTENTION – This plan is the property of Gaylord Industries and is confidential and proprietary. It is not to be copied, reproduced, or distributed, in whole or part, nor be used in anyway detrimental to Gaylord Industries. If you have received this plan without Gaylord's permission, please (i) do not read it, (ii) reply to the sender that you received the drawing in error, and (iii) erase and/or destroy the drawing.

GAYLORD® INDUSTRIES
10900 S.W. AVERY ST.
TUALATIN, OR 97062
TELEPHONE: (503) 691-2010
TOLL FREE: (800) 547-9696
FAX NO.: (503) 692-6048
E-MAIL: gaylord@gaylordusa.com

PIVOT ARCHITECTURE

HALLIDAY ENGINEERING
65 SW YAMHILL
SUITE 400
PORTLAND, OR 97204
503.224.8665
FAX 503.224.8667
WWW.HALLIDAYENGINEERING.COM

HOWARD RECONCILED SET
EUGENE SCHOOL DISTRICT
44 W. BROADWAY ST. EUGENE, OREGON
4J HOWARD ELEMENTARY SCHOOL

Food Service Canopy Hood Details

PROJECT #	1336
ISSUE DATE:	10/28/2014
DRAWN:	SH
CHECKED	LB
REVISIONS:	

FS103A

PRINTED ON: 4/19/2014 6:48:50 PM FROM FILE: S:\2013\1336-4j_Howard_Elementary_School\Drawings\Rev\61336_HES_ARCH_Bldg_14.vxt

© 2014 PIVOT ARCHITECTURE

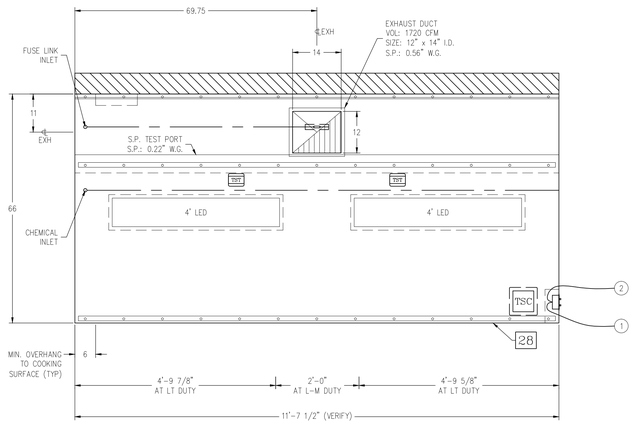

PLAN VIEW

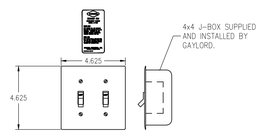

FAN ON-OFF SWITCH/LIGHT SWITCH

Model C-150-LS

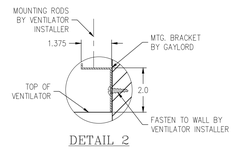

DETAIL 2

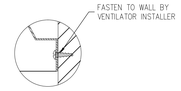

DETAIL 1

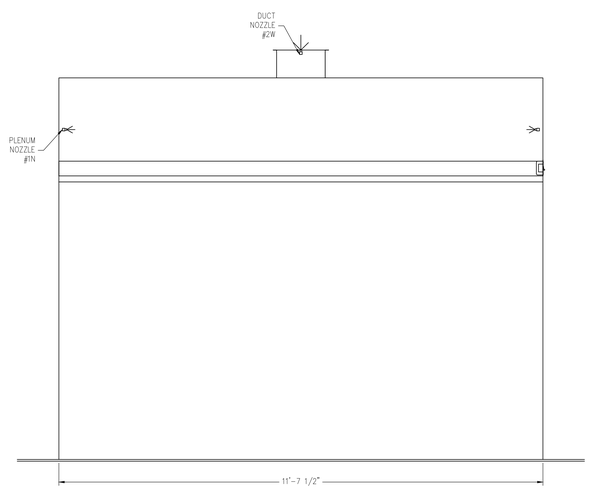

ELEVATION VIEW

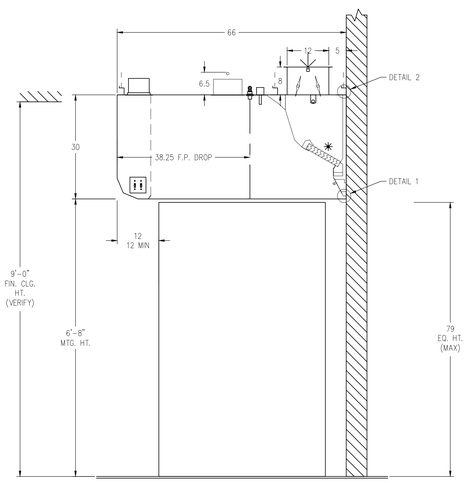

SECTION VIEW

VENTILATOR NOTES (NON-WATER WASH)

A) VERIFY ALL MAKES AND MODELS OF COOKING EQUIPMENT AND LOCATION IN RELATION TO VENTILATOR PRIOR TO FABRICATION.

B) FRONT AND REAR MOUNTING BRACKETS HAVE ø0.625" HOLES. BRACKETS TO BE SUPPORTED WITHIN 12" OF EACH END OF EACH SECTION, WITH A MAXIMUM SPAN OF 72" BETWEEN SUPPORTS.

C) INTERIOR MOUNTING BRACKET(S) TO BE SUPPORTED WITHIN 36" OF EACH END OF EACH SECTION, WITH A MAXIMUM SPAN OF 72" BETWEEN SUPPORTS.

VERIFY EXHAUST & SUPPLY FANS

A) VERIFY IF THIS HOOD IS EXHAUSTED ON ITS OWN EXHAUST FAN OR IS IT EXHAUSTED ON A COMMON EXHAUST FAN SHARED WITH OTHER HOODS.

B) VERIFY NUMBER OF SUPPLY (MAKE-UP AIR) FANS.

LIGHTING NOTE

THIS LIGHTING IN THIS VENTILATOR IS DESIGNED TO PROVIDE 50 FOOT CANDLES OF LIGHT AT THE COOKING SURFACE, IF 50 FOOT CANDLES OF LIGHTING IS PROVIDED IN THE SURROUNDING SPACE.

USE LED LIGHT FIXTURES, AND LED BULBS PROVIDED BY GAYLORD.

VENTILATOR WIRING NOTES (NON-WATER WASH)

① (6) WIRES AND GROUND, FOR CONTROL(S) AND AUTOSTART, TO J-BOX ON TOP OF VENTILATOR BY ELECTRICAL CONTRACTOR. WIRED TO SUPPLY VOLTAGE, FP SYSTEM, AND FANS BY ELECTRICAL CONTRACTOR.

* LIGHT FIXTURES, VAPOR PROOF, U.L. LISTED, FURNISHED, INSTALLED AND WIRED BY GAYLORD. *

② (2) WIRES AND GROUND, FOR LIGHT(S), TO J-BOX ON TOP OF VENTILATOR BY ELECTRICAL CONTRACTOR. WIRED TO SUPPLY VOLTAGE BY ELECTRICAL CONTRACTOR.

VERIFY CEILING CONDITIONS

EXACT FLOOR TO STRUCTURAL CEILING AND FLOOR TO FINISH CEILING HEIGHTS MUST BE VERIFIED FOR VENTILATOR DESIGN. INCORRECT HEIGHTS MAY CAUSE THE VENTILATOR TO NOT FIT PROPERLY OR COMPLY WITH CLEARANCES SPECIFIED IN APPLICABLE CODES AND STANDARDS. CAUTION: IF THE FINISHED CEILING IS HIGHER THAN THE TOP OF THE VENTILATOR, ENCLOSURE PANELS MAY BE REQUIRED.

FLOOR TO STRUCTURAL CEILING: _____(VERIFY)_____

FLOOR TO FINISH CEILING: __9'-0" (VERIFY)__

FIRE PROTECTION SYSTEM NOTES ANSUL R-102-ASEF

FP-1) LOCATION OF FIRE PROTECTION NOZZLES MUST BE VERIFIED IN RELATION TO THE COOKING EQUIPMENT, PRIOR TO VENTILATOR FABRICATION.

COMPLETE SYSTEM INCLUDING APPLIANCE DROPS AND SURFACE MOUNTED DETECTION BRACKETS, WITH FIELD INSTALLATION BY GAYLORD.

ANSUL FIRE SYSTEM FACTORY PRE-PIPED CHEMICAL LINES INCLUDING DUCT, PLENUM AND APPLIANCE DROPS WITH ALL NOZZLES INSTALLED PER COOKING EQUIPMENT ARRANGEMENT ON GAYLORD APPROVED DRAWINGS. ALL EXPOSED CHEMICAL PIPING CHROME PLATED OR CHROME SLEEVED. INCLUDES FACTORY PRE-PIPED DETECTION LINES WITH SURFACE MOUNTED DETECTOR BRACKETS. INSTALLATION BY CERTIFIED FACTORY INSTALLERS.

INCLUDES:
- TANK(S) AND RELEASE ASSEMBLY(S)
- CHEMICAL
- DETECTOR CABLE
- FUSIBLE LINKS WITH LINKAGE
- EXPELLANT GAS CARTRIDGE(S) (PROVIDED BY FIRE PROTECTION INSTALLER)
- (1) REMOTE MANUAL PULL STATION
- (1) GAS VALVE PER FIRE SYSTEM WITH A MAXIMUM SIZE OF 2-1/2"
- (1) MANUAL RESET RELAY PER FIRE SYSTEM, IF REQUIRED
- PLANS AND PERMITS (ON JOBS INSIDE OF THE UNITED STATES AND NON-MARINE JOBS)
- PARTS AND INSTALLATION OF CHEMICAL AND DETECTION LINES FROM TANK(S) TO CONNECTION POINTS ON HOOD
- INSTALLATION OF TANKS AND RELATED COMPONENTS
- INSTALLATION OF DETECTOR CABLE AND FUSIBLE LINKS
- INSTALLATION OF REMOTE MANUAL PULL STATION
- JOB SITE REPOSITIONING OF NOZZLES AS PER GAYLORD APPROVED DRAWINGS, IF REQUIRED TO MEET SYSTEM DESIGN REQUIREMENTS
- TRIP TEST AND CERTIFICATION (ON JOBS INSIDE OF THE UNITED STATES AND NON-MARINE JOBS)

EXCLUDES:
- UNION LABOR AND PREVAILING WAGE
- INSTALLATION OF GAS VALVE(S)
- ELECTRICAL DISCONNECTS
- PARTS AND LABOR FOR ANY ELECTRICAL INTERCONNECTIONS
- JOB SITE REPOSITIONING OF NOZZLES IF COOKING EQUIPMENT IS NOT INSTALLED PER GAYLORD APPROVED DRAWINGS
- PLANS AND PERMITS ON JOBS OUTSIDE OF THE UNITED STATES AND ON MARINE JOBS
- TRIP TEST AND CERTIFICATION ON JOBS OUTSIDE OF THE UNITED STATES AND ON MARINE JOBS
- HANDHELD FIRE EXTINGUISHER(S)
- INSPECTION AND SERVICING
- RECESSED ANSUL CABINET(S)

INSTALLATION INFORMATION

MAXIMUM VENTILATOR DIMENSION:
11'-8" L. x 3'-8" W.
3'-2" H.
TOTAL ESTIMATED HANGING WEIGHT:
989 LBS.

VENTILATORS MANUFACTURED IN MULTIPLE SECTIONS ARE PROVIDED WITH BOLTS, CLIPS, AND ALL NECESSARY HARDWARE FOR RECONNECTING BY THE VENTILATOR INSTALLER. CONTROL AND LIGHTING WIRING ARE PRE-WIRED AND DISCONNECTED FOR SHIPMENT. WIRING MUST BE RECONNECTED BY APPLICABLE TRADES.

REV	DRWN.BY	DATE	REVISIONS	CHECKED BY

This plan is made from available information, but measurements are to be verified by contractors, installers and others in connection with this job. Gaylord Industries accepts no responsibility for work done by contractors, installers and others, and will not stand any expense for charges made necessary by local building codes, ordinances, structural conditions or by the substitution or changes in equipment shown in this plan. This plan must be verified and approved by proper parties before fabrication can be started and approval shall not be made unless contractors, installers and others have reviewed applicable codes with code authorities. Reference is made to the general notes, which are a part of these plans and all contractors, installers and others utilizing these plans are advised they are responsible for examining and becoming familiar with said general notes before commencing any work hereunder. Any inconsistencies between these plans and the general notes, or between these plans, the general notes, and local building codes or ordinances must be immediately called to the attention of Gaylord Industries in writing so that any such inconsistencies can be resolved. Gaylord Industries must be notified of any changes made to the plan in a clear and conspicuous manner. Gaylord Industries will not be responsible for any incidental or consequential damages incurred by others as a result of contractors, installers and others failure to notify Gaylord of changes to the plan.

ATTENTION – This plan is the property of Gaylord Industries and is confidential and proprietary. It is not to be copied, reproduced, or distributed, in whole or part, nor be used in anyway detrimental to Gaylord Industries. If you have received this plan without Gaylord's permission, please (i) do not read it, (ii) reply to the sender that you received the drawing in error, and (iii) erase and/or destroy the drawing.

GAYLORD® INDUSTRIES
10900 S.W. AVERY ST.
TUALATIN, OR 97062
TELEPHONE: (503) 691-2010
TOLL FREE: (800) 547-9696
FAX NO.: (503) 692-6048
E-MAIL: gaylord@gaylordusa.com

DIMENSION TOLERANCE ± 1/4" (6mm)

ANSUL R-102-ASEF-T-N-F		FP-1		
ELX-GBD-A-AS-66		28		
MODEL #		ITEM #		WORK ORDER #
DRAWN BY: RS	CHECKED BY:	ELECT. CHECK:	F.P. CHECK:	S.E. APPROVAL:

4-J HOWARD

Lane County, OR

PRELIMINARY ENGINEERING

DRAWING NO.:	DATE:		REV.:	SHEET NO.:
14-0799	06-24-14			02

GAYLORD®

PIVOT ARCHITECTURE

HALLIDAY
ELECTRICAL
68 W. HOWARD
EUGENE, OREGON
541-343-8263
FAX 541-343-8263
EMAIL: HALLIDAYELECTRICAL@COMCAST.NET

HOWARD RECONCILED SET

EUGENE SCHOOL DISTRICT
44 W. BROADWAY ST. EUGENE, OREGON

HOWARD ELEMENTARY SCHOOL

Food Service Canopy Hood Details

PROJECT #:	1339
ISSUE DATE:	10/28/2014
DRAWN:	SKR
CHECKED:	LB

REVISIONS:

FS103B

PRINTED ON: 4/19/2014 6:48:50 PM FROM FILE: S:\2013\1336-4J_Howard_Elementary_School\Drawings\Revit\1339_HES_ARCH_Bldg_14.rvt

© 2014 PIVOT ARCHITECTURE

GAYLORD AUTOSTART NOTES

A) TEMPERATURE SENSING THERMOSTATS (TST) INSTALLED IN HOOD

B) "TST" – PRESET TO 90°F AT FACTORY

C) IN SOME CLIMATES AND/OR CONDITIONS, IT MAY BE NECESSARY TO ADJUST THE "TST" TEMPERATURE SETTING IN THE FIELD BY OTHERS

D) DRY CONTACTS EF1 & EF2, MAY BE WIRED TO 24V TO 220VAC CONTACTS

WIRING NOTES

E-1) ALL EXTERNAL CONTROL WIRING SHALL BE 12 GAUGE MINIMUM OR AS PER APPLICABLE CODES.

E-2) THE HOLDING COILS WITHIN THE MAGNETIC STARTERS MUST MATCH THE SUPPLY VOLTAGE. MAGNETIC STARTERS ARE SUPPLIED BY OTHERS.

— — FIELD WIRING BY OTHERS
—— WIRING BY GAYLORD

WHEN USING MULTIPLE LIGHT SWITCHES ON ONE CIRCUIT, VERIFY THAT THE LOAD DOES NOT EXCEED 15 AMPS (MAX.) IF IT DOES, USE MULTIPLE CIRCUITS.

SUPPLY VOLTAGE
[x] 120V
[ ] 220V
[ ] 50Hz
[x] 60Hz

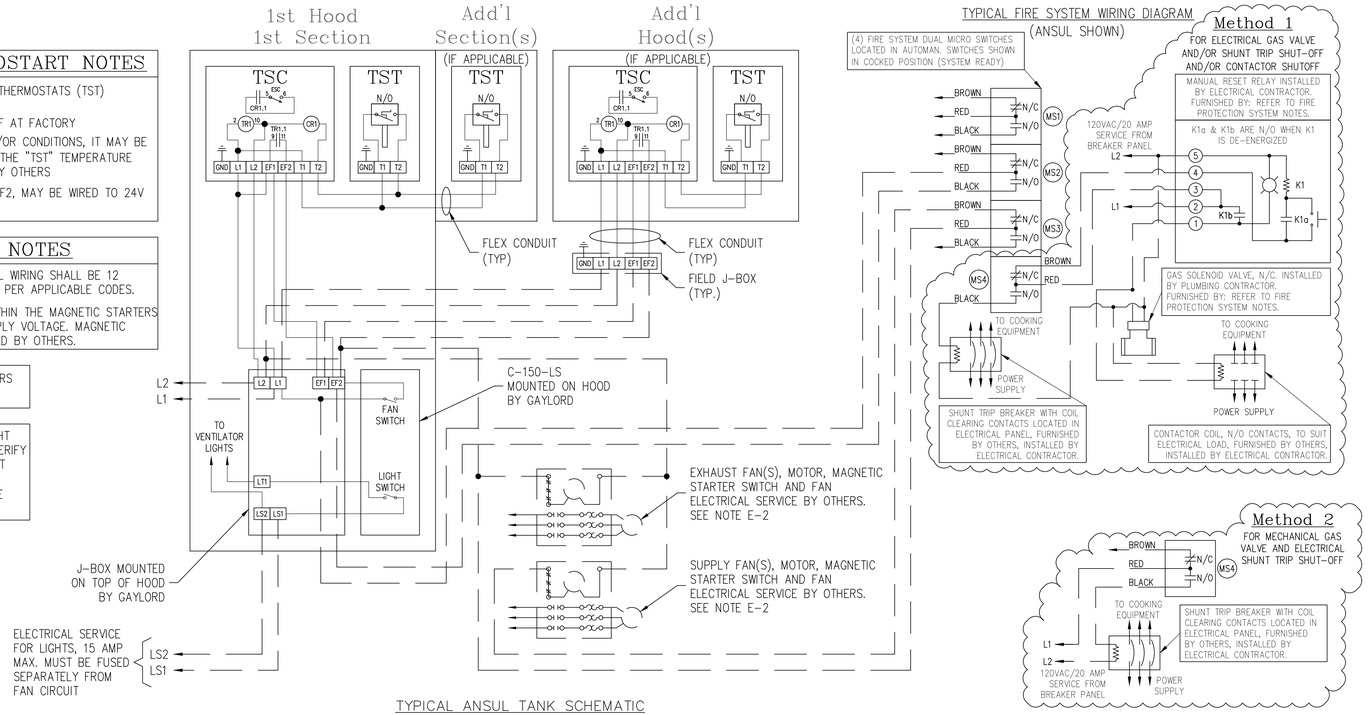

TYPICAL ANSUL TANK SCHEMATIC
(FOR NON-WATER WASH VENTILATOR)

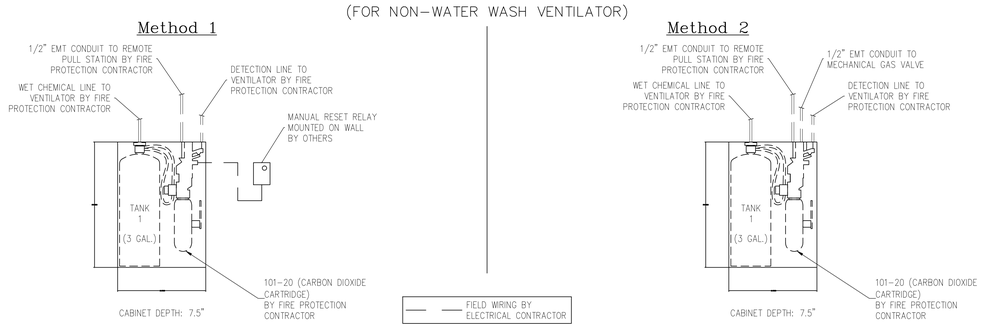

DIMENSION TOLERANCE ± 1/4" (6mm)

ANSUL R-102-ASEF-T-N-F	FP-1		
ELX-GBD-A-AS-66	28		
MODEL #	ITEM #		WORK ORDER #

DRAWN BY:	CHECKED BY:	ELECT. CHECK:	F.P. CHECK:	S.E. APPROVAL:
RS				

4-J HOWARD

Lane County, OR

PRELIMINARY ENGINEERING

DRAWING NO.:	DATE:		REV.:	SHEET NO.:
14-0799	06-24-14			03

INSTALLATION INFORMATION

REV	DRWN.BY	DATE	REVISIONS	CHECKED BY

This plan is made from available information, but measurements are to be verified by contractors, installers and others in connection with this job. Gaylord Industries accepts no responsibility for work done by contractors, installers and others, and will not stand any expense for charges made necessary by local building codes, ordinances, structural conditions or by the substitution or changes in equipment shown in this plan. This plan must be verified and approved by proper parties before fabrication can be started and approval shall not be made unless contractors, installers and others have reviewed applicable codes with code authorities. Reference is made to the general notes, which are a part of these plans and all contractors, installers and others utilizing these plans are advised they are responsible for examining and becoming familiar with said general notes before commencing any work hereunder. Any inconsistencies between these plans and the general notes, or between these plans, the general notes, and local building codes or ordinances must be immediately called to the attention of Gaylord Industries in writing so that any such inconsistencies can be resolved. Gaylord Industries must be notified of any changes made to the plan in a clear and conspicuous manner. Gaylord Industries will not be responsible for any incidental or consequential damages incurred by others as a result of contractors, installers and others failure to notify Gaylord of changes to the plan.

ATTENTION – This plan is the property of Gaylord Industries and is confidential and proprietary. It is not to be copied, reproduced, or distributed, in whole or part, nor be used in anyway detrimental to Gaylord Industries. If you have received this plan without Gaylord's permission, please (i) do not read it, (ii) reply to the sender that you received the drawing in error, and (iii) erase and/or destroy the drawing.

GAYLORD® INDUSTRIES
10900 S.W. AVERY ST.
TUALATIN, OR 97062
TELEPHONE: (503) 691-2010
TOLL FREE: (800) 547-9696
FAX NO.: (503) 692-6048
E-MAIL: gaylord@gaylordusa.com

PIVOT ARCHITECTURE

HALLIDAY ENGINEERING
88 E. 7th AVENUE
EUGENE, OREGON 97401
(541) 484-8663
FAX NO. 484-8665
EMAIL: halliday@hallidayengineering.com

HOWARD RECONCILED SET
EUGENE SCHOOL DISTRICT
44 W. BROADWAY ST. EUGENE OREGON
HOWARD ELEMENTARY SCHOOL

Food Service Canopy Hood Details

PROJECT #	1336
ISSUE DATE:	10/28/2014
DRAWN:	SR
CHECKED:	LB
REVISIONS:	

FS103C

PRINTED ON: 4/19/2014 6:48:50 PM FROM FILE: S:\2013\1336-4j_Howard_Elementary_School\Drawings\Rev6\1336_HES_ARCH_Bldg_14.rvt

© 2014 PIVOT ARCHITECTURE

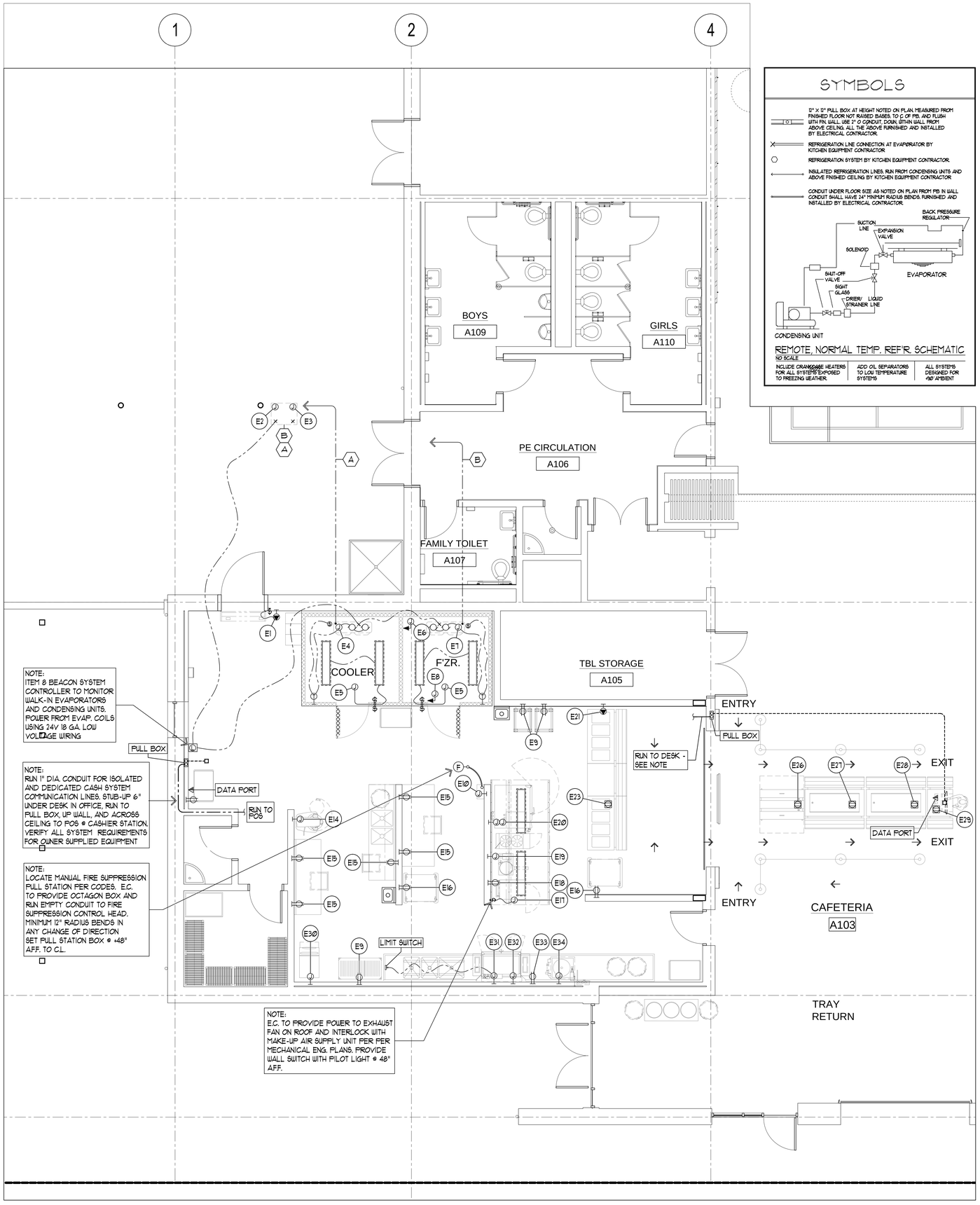

SYMBOLS

12" X 12" PULL BOX AT HEIGHT NOTED ON PLAN, MEASURED FROM FINISHED FLOOR NOT RAISED BASES. TO C. OF PIB, AND FLUSH WITH FIN. WALL. USE 2" Ø CONDUIT, DOWN, WITHIN WALL FROM ABOVE CEILING. ALL THE ABOVE FURNISHED AND INSTALLED BY ELECTRICAL CONTRACTOR.

REFRIGERATION LINE CONNECTION AT EVAPORATOR BY KITCHEN EQUIPMENT CONTRACTOR.

REFRIGERATION SYSTEM BY KITCHEN EQUIPMENT CONTRACTOR.

INSULATED REFRIGERATION LINES. RUN FROM CONDENSING UNITS AND ABOVE FINISHED CEILING BY KITCHEN EQUIPMENT CONTRACTOR

CONDUIT UNDER FLOOR SIZE AS NOTED ON PLAN FROM PIB IN WALL. CONDUIT BUALL HAVE 24" MINIMUM RADIUS BENDS. FURNISHED AND INSTALLED BY ELECTRICAL CONTRACTOR.

REMOTE, NORMAL TEMP. REF'R SCHEMATIC

NO SCALE

INCLUDE CRANKCASE HEATERS FOR ALL SYSTEMS EXPOSED TO FREEZING WEATHER.	ADD OIL SEPARATORS TO LOW TEMPERATURE SYSTEMS	ALL SYSTEMS DESIGNED FOR +90° AMBIENT

ELECTRICAL SCHEDULE

ITEM NO.	EN0.	VOLTS	Ø	DESCRIPTION	LOCN.	HEIGHT	SERVICE TO :	RATING	REMARKS
1	E1	208	1	SCO	WALL	105"	AIR CURTAIN	1. 7 AMPS	AMPS PER MOTOR. VERIFY NEMA PLUG CONFIGURATION
8	E2	208	1	J-BOX	WALL	VERIFY	W.I. COOLER CONDENSING UNIT	3/4 HP	15 AMPS. SYSTEM A - BEACON SYSTEM
8	E3	208	3	J-BOX	WALL	VERIFY	W.I. FREEZER CONDENSING UNIT	1-1/4 HP	15 AMPS. SYSTEM B - BEACON SYSTEM
8	E4	120	1	J-BOX	CEILING	---	WALK-IN COOLER EVAPORATOR	2 AMPS	SYSTEM A - BEACON SYSTEM
7	E5	120	1	J-BOX	CEILING	---	(2) WALK-IN LIGHTS	160 W	80W EACH
7	E6	120	1	J-BOX	CEILING	---	WALK-IN DRAIN LINE HEATER	500 W	---
8	E7	208	1	J-BOX	CEILING	---	WALK-IN FREEZER EVAPORATOR	7. 8 AMPS	SYSTEM B - BEACON SYSTEM
7	E8	120	1	J-BOX	CEILING	---	WALK-IN DOOR HEATER	500 W	---
---	E9	120	1	DCO	WALL	18"	CONVENIENCE	1440 W	---
28	E10	120	1	J-BOX	WALL	102"	FIRE PROTECTION SYSTEM	1 KW	---
---	E11	---	--	NOT USED	---	---	---	---	---
---	E12	---	--	NOT USED	---	---	---	---	---
---	E13	---	--	NOT USED	---	---	---	---	---
16	E14	208	3	J-BOX	WALL	---	30-QUART MIXER	2. 8 AMPS	---
---	E15	120	1	DCO	WALL	45"	CONVENIENCE	1440 W	---
18	E16	120	1	DCO	WALL	18"	MOBILE HEATED/PROOFING CABINET	12 AMPS	FURNISHED WITH NEMA 5-15P
28	E17	120	1	J-BOX	CEILING	---	(2) CANOPY HOOD LIGHTS	160 W	80W EACH.
31	E18	120	1	DCO	WALL	44"	CONVECTION STEAMER	15 AMPS	VERIFY NEMA PLUG CONFIGURATION
30	E19	208	3	J-BOX	WALL	21"	20-GALLON TILTING KETTLE	18 AMPS	---
33	E20	208	3	J-BOXES (STACKED)	WALL	7" / 42"	DBL. STACK COMBI-OVEN STEAMERS	7. 2 AMPS	EACH CONNECTION
34	E21	120	1	SCO	WALL	18"	HOT FOOD SERVING STATION	9. 6 AMPS	VERIFY TOTAL AMPS. FURNISHED WITH NEMA 6-15P
---	E22	---	--	NOT USED	---	---	---	---	---
34	E23	120	1	SCO (FLOOR BOX)	FLOOR	0"	HOT FOOD SERVING STATION	9. 6 AMPS	VERIFY TOTAL AMPS. FURNISHED WITH NEMA 6-15P
---	E24	---	--	NOT USED	---	---	---	---	---
---	E25	---	--	NOT USED	---	---	---	---	---
38	E26	120	1	DCO (FLOOR BOX)	FLOOR	0"	MOBILE DOUBLE-SIDED MILK COOLER	6. 8 AMPS	FURNISHED WITH NEMA 5-15P
39	E27	120	1	DCO (FLOOR BOX)	FLOOR	0"	MOBILE DBL.-SIDED FRUIT/VEGIE BAR	7. 5 AMPS	FURNISHED WITH NEMA 5-15P
40	E28	120	1	DCO (FLOOR BOX)	FLOOR	0"	MOBILE DBL.-SIDED FRUIT/VEGIE BAR	7. 5 AMPS	FURNISHED WITH NEMA 5-15P
42	E29	120	1	FLOOR BOX	FLOOR	0"	POINT OF SALE SYSTEM	1 KW	ISOLATED & DEDICATED
19	E30	120	1	J-BOX	WALL	58"	CUBE ICE MACHINE	11. 5 AMPS	---
46	E31	480	3	J-BOX	WALL	64"	WAREWASHER (TANK HEAT/MOTORS)	2-1/6 HP	& 30 KW. NTERCONNECT WITH TABLE LIMIT SWITCH
46	E32	480	3	J-BOX	WALL	64"	WAREWASHER BOOSTER HEATER	40. 1 AMPS	---
46	E33	120	1	DCO	WALL	64"	WAREWASHER DETERGENT FEED	1440 W	---
48	E34	208	3	J-BOX	WALL	13"	WASTE COLLECTOR	3. 2 AMPS	---

ELECTRICAL NOTES

1. THIS DRAWING IS NOT TO BE USED FOR ESTABLISHING ROUGH-IN LOCATIONS. REFER TO DIMENSIONED DRAWINGS PREPARED BY THE KITCHEN EQUIPMENT CONTRACTOR.
2. UNDER ELECTRICAL WORK OF DIVISION 26, PROVIDE ALL ROUGH-INS AND FINAL CONNECTIONS IN CONFORMANCE WITH LOCAL CODES.
3. HOOD LIGHTS ARE FURNISHED UNDER KITCHEN EQUIPMENT, DIVISION 11. UNDER ELECTRICAL WORK OF DIVISION 26, FURNISH AND INSTALL SWITCHES AND FURNISH AND INSTALL ALL INTERCONNECTING CONDUIT AND WIRING CONCEALED FROM SIGHT.
4. UNDER ELECTRICAL WORK OF DIVISION 26, FURNISH AND INSTALL ALL INTERCONNECTING WIRING ACROSS CEILING AS REQUIRED BETWEEN HOODS AND HOOD FIRE CONTROL PANEL.
5. WALK-IN COLD STORAGE ROOMS, LIGHTS, AND CEILING MOUNT EVAPORATORS ARE FURNISHED AND INSTALLED UNDER KITCHEN EQUIPMENT, DIVISION 11. UNDER ELECTRICAL WORK OF DIVISION 26, FURNISH AND INSTALL ALL INTERCONNECTING CONDUIT AND WIRING ABOVE CEILING CONCEALED FROM SIGHT.
6. ALL ELECTRICAL RECEPTACLES SHALL BE MOUNTED HORIZONTALLY ON FIXTURES AND WALLS.
7. ALL EVAPORATOR MOTOR CONNECTIONS SHALL BE MADE WITH CONDUIT TO A J-BOX. PLUG-IN TYPE CONNECTIONS WILL NOT BE ACCEPTED.
8. COLD STORAGE ROOM EVAPORATOR DRAIN LINES (INCLUDING HEAT TAPE FOR FREEZER DRAIN) ARE FURNISHED AND INSTALLED UNDER KITCHEN EQUIPMENT, DIVISION 11. TRAP AT OUTLET END.
9. REFRIGERATION, HIGH PRESSURE WASH SYSTEM, AND BEVERAGE LINES SHOWN ARE SCHEMATIC ONLY AND SHALL BE ADJUSTED TO FIT BUILDING CONDITIONS.
10. UNDER ELECTRICAL WORK OF DIVISION 26, PROVIDE ALL DISCONNECTS, INTERLOCKS, AND CONTACTORS REQUIRED BY LOCAL CODES.
11. UNDER ELECTRICAL WORK OF DIVISION 26, FURNISH AND INSTALL SHUNT TRIP CIRCUIT BREAKERS TO SHUT OFF POWER SUPPLY TO ALL ELECTRICAL COOKING EQUIPMENT DURING FIRE SYSTEM ACTIVATION.
12. UNDER WORK OF KITCHEN EQUIPMENT, DIVISION 11, FURNISH AND INSTALL STAINLESS STEEL OR CHROME PLATED ESCUTCHEON PLATES FOR ALL ELECTRICAL CONNECTIONS PENETRATING COUNTER TOPS FOR BELOW COUNTER PLUG-INS.
13. UNDER ELECTRICAL WORK OF DIVISION 26, FURNISH AND INSTALL ALL INTERCONNECTING WIRING AS REQUIRED BETWEEN BOOSTER HEATER AND DISHWASHER.
14. UNDER ELECTRICAL WORK OF DIVISION 26, FURNISH AND INSTALL ALL INTERCONNECTING WIRING BETWEEN WAREWASHER CONTROL PANEL AND EXHAUST FAN FOR AUTO FAN ON/OFF DURING EQUIPMENT OPERATION.

ELECTRICAL SYMBOL LEGEND

DCO (DUPLEX CONVENIENCE OUTLET)

J-BOX (JUNCTION BOX)

THERMOSTAT

SOLENOID

MOTOR

SWITCH(S)

LIGHT

FLOOR STUB (AS NOTED)

PIVOT ARCHITECTURE

HALLIDAY ENGINEERING
88 E. 27th, NORTH
SUITE 200
EUGENE, OREGON 97405
PH: 541-344-8263
FAX: 541-344-8267
WWW.HALLIDAYENGINEERING.COM

HOWARD RECONCILED SET
EUGENE SCHOOL DISTRICT
44 W. BROADWAY ST. EUGENE, OREGON
HOWARD ELEMENTARY SCHOOL

Food Service Electrical/Refrig. Plan

PROJECT #:	1336
ISSUE DATE:	12/05/2014
DRAWN:	SR
CHECKED:	LB
REVISIONS:	

FS104

PRINTED ON: 4/9/2014 6:48:50 PM FROM FILE: S:\2013\1336-4_Howard_Elementary_School\Drawings\Rev\1336_HES_ARCH_Bldg_14.rvt

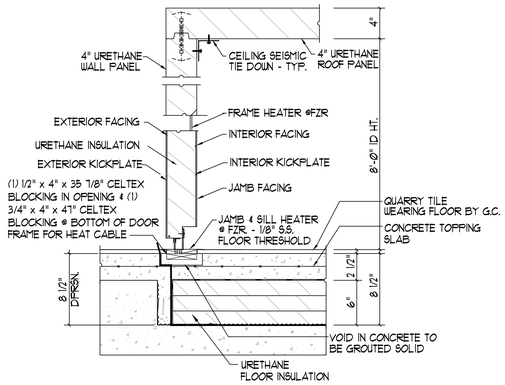

A DOOR/FLOOR SECTION
NO SCALE

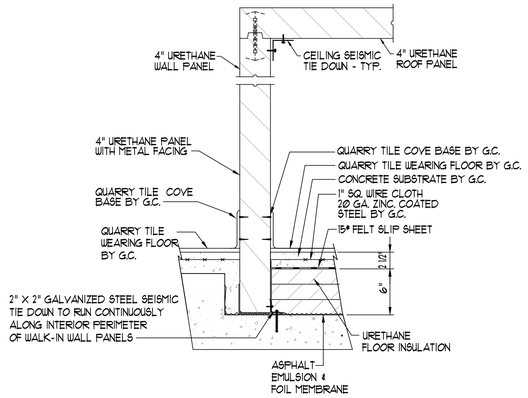

B WALL/FLOOR SECTION
NO SCALE

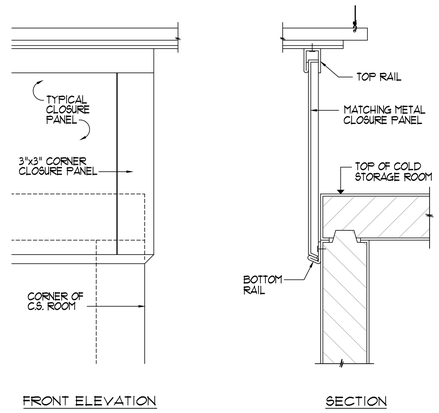

FRONT ELEVATION

SECTION

C CLOSURE PANEL DETAILS
NO SCALE

* NOTE: REFER TO ARCHITECTURAL FINISH SCHEDULE FOR FINISHED FLOOR MATERIAL AT INTERIOR AND EXTERIOR OF WALK-IN COLD STORAGE ROOMS

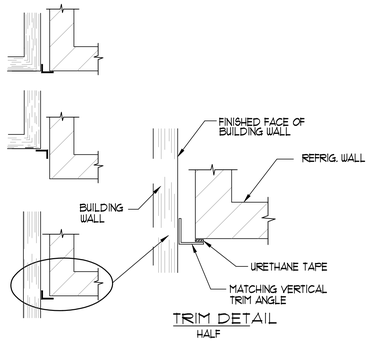

TRIM DETAIL
HALF

D VERITCAL TRIM MOULDING DETAIL
NO SCALE

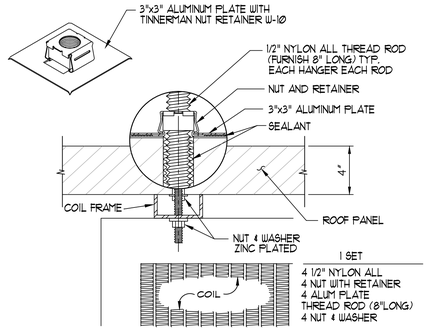

RODS WASHER NUTS & ALUMINUM PLATES WITH NUT RETAINER SHALL BE SIGNED OVER TO JOB SUPERINTENDENT. ACTUAL INSTALLATION OF PARTS SHALL BE RESPONSIBILITY OF THE MECHANICAL REFRIGERATION CONTRACTOR.

E NYLON ROD COIL HANGER DETAIL
NO SCALE

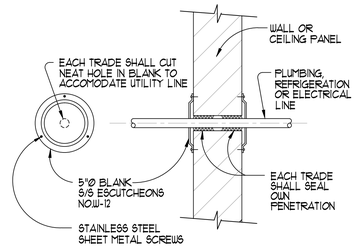

F TYPICAL ESCUTCHEON DETAIL
NO SCALE

PVOT ARCHITECTURE

HALLIDAY
ENGINEERING
88 W. 7th, HOYT/WEST
EUGENE, OREGON 97401
PHONE: 541-344-8263
FAX: 541-344-8263
EMAIL: HALLIDAYENGINEERING@GMAIL.COM

HOWARD RECONCILED SET
EUGENE SCHOOL DISTRICT
44 W. BROADWAY ST. EUGENE, OREGON
HOWARD ELEMENTARY SCHOOL

Food Service Walk-In Details

PROJECT #	1336
ISSUE DATE:	10/28/2014
DRAWN:	SR1
CHECKED:	LB

REVISIONS:

FS201

PRINTED ON: 4/19/2014 6:48:50 PM FROM FILE: S:\2013\1336-4_Howard_Elementary_School\Drawings\Rev#1\1336_HES_ARCH_Bldg_14.rvt
- 2014 PIVOT ARCHITECTURE

© 2014 PIVOT ARCHITECTURE

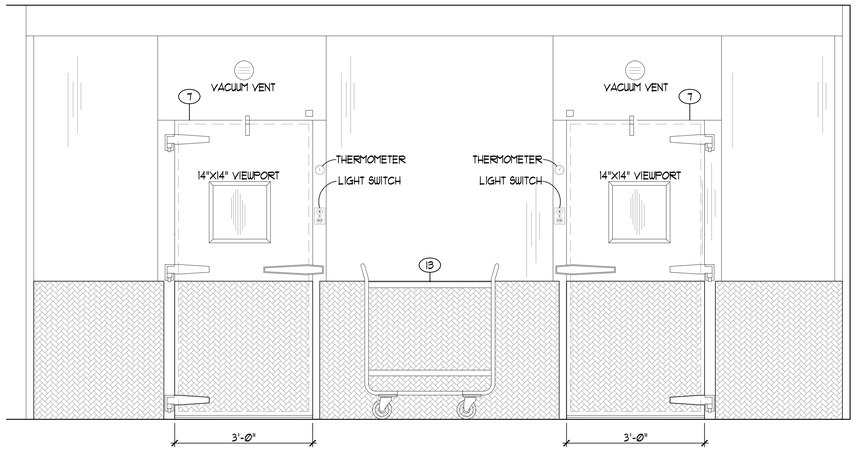

A ELEVATION W. I. COOLER/FREEZER BANK - (EXTERIOR)
3/4"=1'-0"

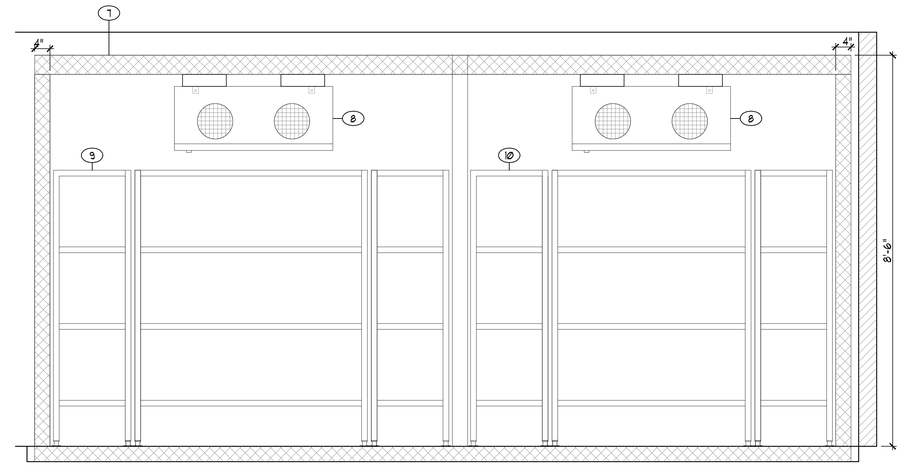

B ELEVATION W. I. COOLER/FREEZER BANK - (INTERIOR)
3/4"=1'-0"

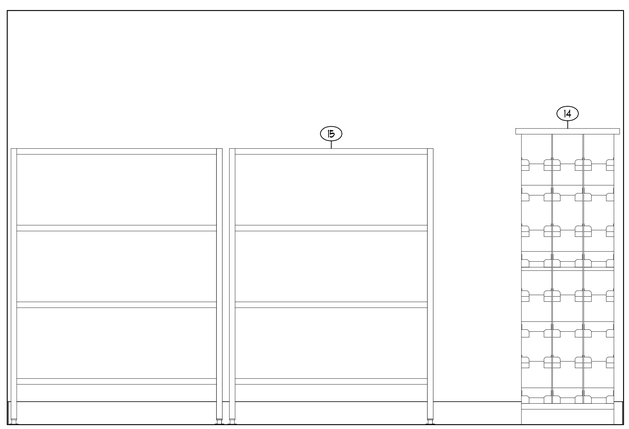

C ELEVATION DRY STORAGE
3/4"=1'-0"

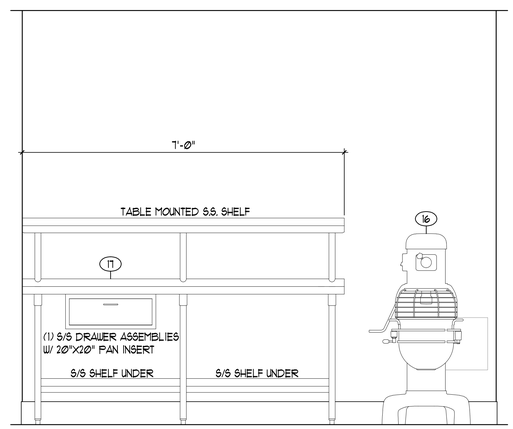

D ELEVATION SUPPORT WORK TABLE
3/4"=1'-0"

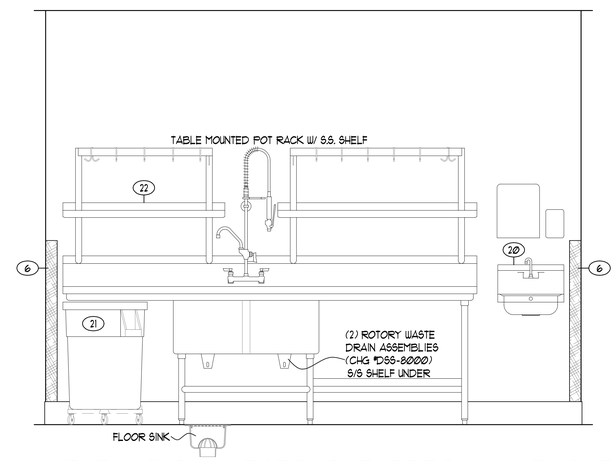

E ELEVATION VEGETABLE PREP SINK TABLE
3/4"=1'-0"

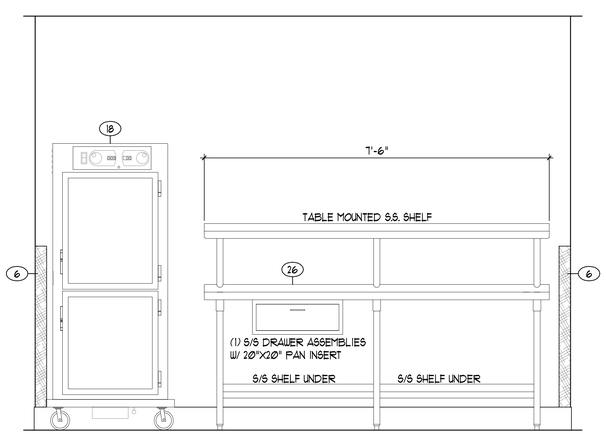

F ELEVATION HEATED/PROOFING CABINET & WORK TABLE
3/4"=1'-0"

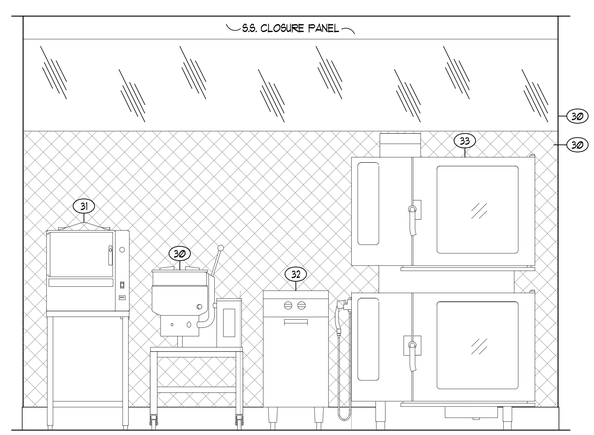

G ELEVATION COOKING LINE
3/4"=1'-0"

NOTE: SEE SHEET FS101 FOR LOCATIONS AND QUANTITIES OF THESE ITEMS

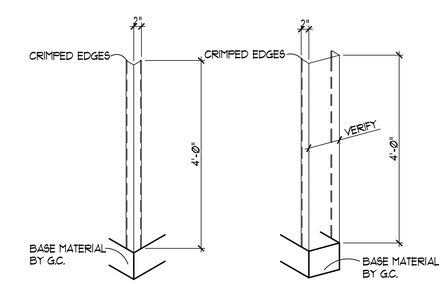

CORNER CHANNEL

6 DETAILS CORNER & CHANNEL GUARDS
3/4"=1'-0"

PIVOT ARCHITECTURE

HALLIDAY ENGINEERING
88 W. BROADWAY
EUGENE, OREGON 97401
541-342-7657
FAX 342-8337
WWW.HALLIDAYENGINEERING.COM

HOWARD RECONCILED SET
EUGENE SCHOOL DISTRICT
4J
44 W. BROADWAY ST. EUGENE, OREGON
HOWARD ELEMENTARY SCHOOL

Food Service Fabrication Details

PROJECT #:	1336
ISSUE DATE:	10/28/2014
DRAWN:	SH
CHECKED:	LB
REVISIONS:	

FS202

PRINTED ON: 4/10/2014 6:48:50 PM FROM FILE: S:\2013\1336-4j_Howard_Elementary_School\Drawings\Revit\1336_HES_ARCH_Bldg_14.rvt

© 2014 PIVOT ARCHITECTURE

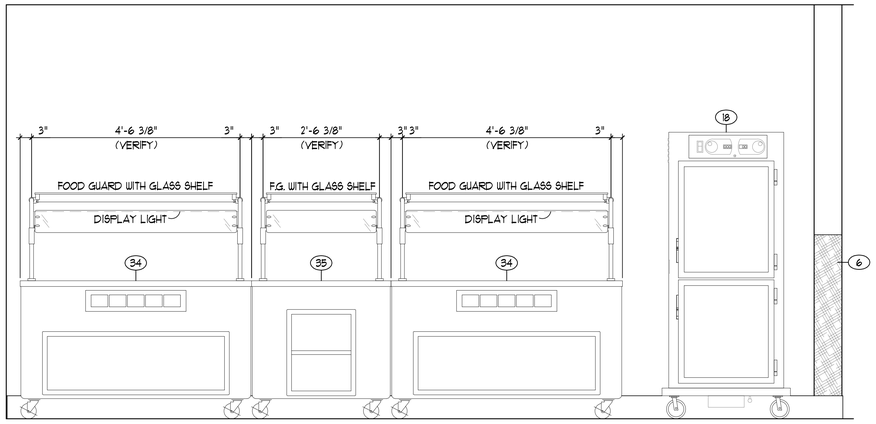

H ELEVATION HOT FOOD & FLAT TOP SERVING STATIONS W/FOOD GUARDS
3/4"=1'-0"
SERVICE SIDE

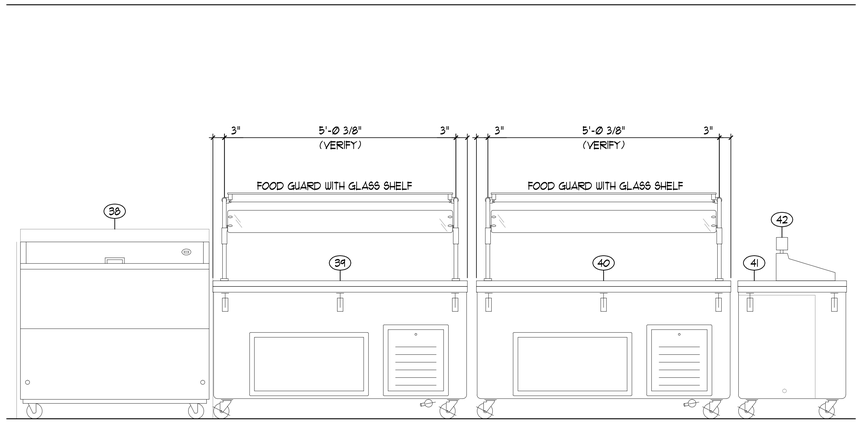

I ELEVATION MOBILE DOUBLE-SIDED MILK, REF. SALAD BAR, & VEGI BAR
3/4"=1'-0"

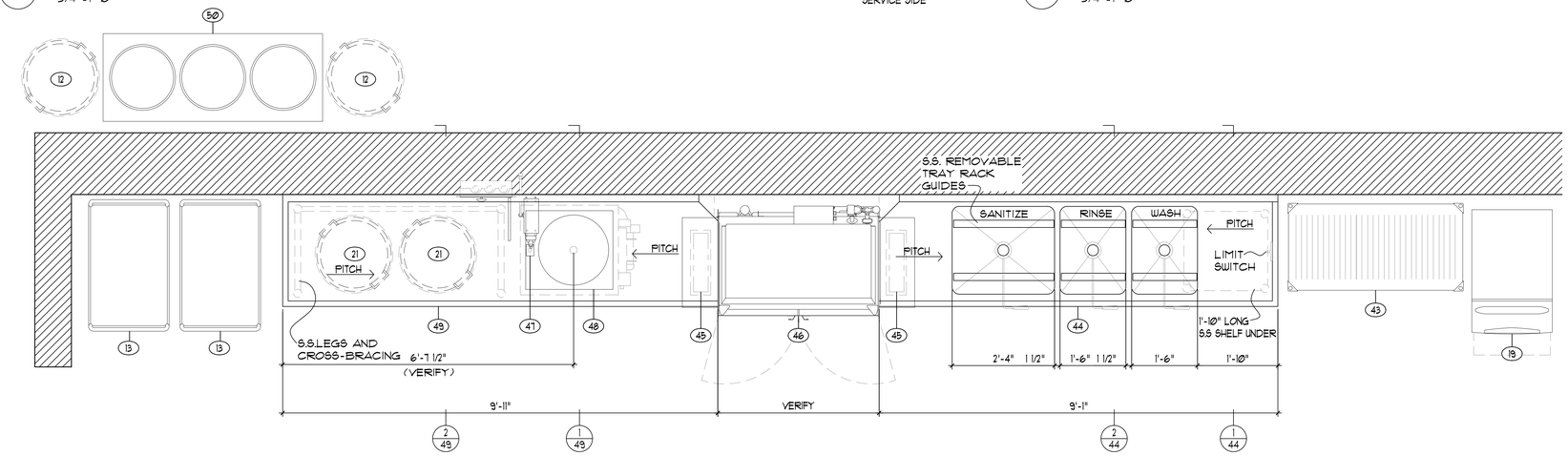

44 46 49 PLAN VIEW WAREWASHING AREA
3/4"=1'-0"

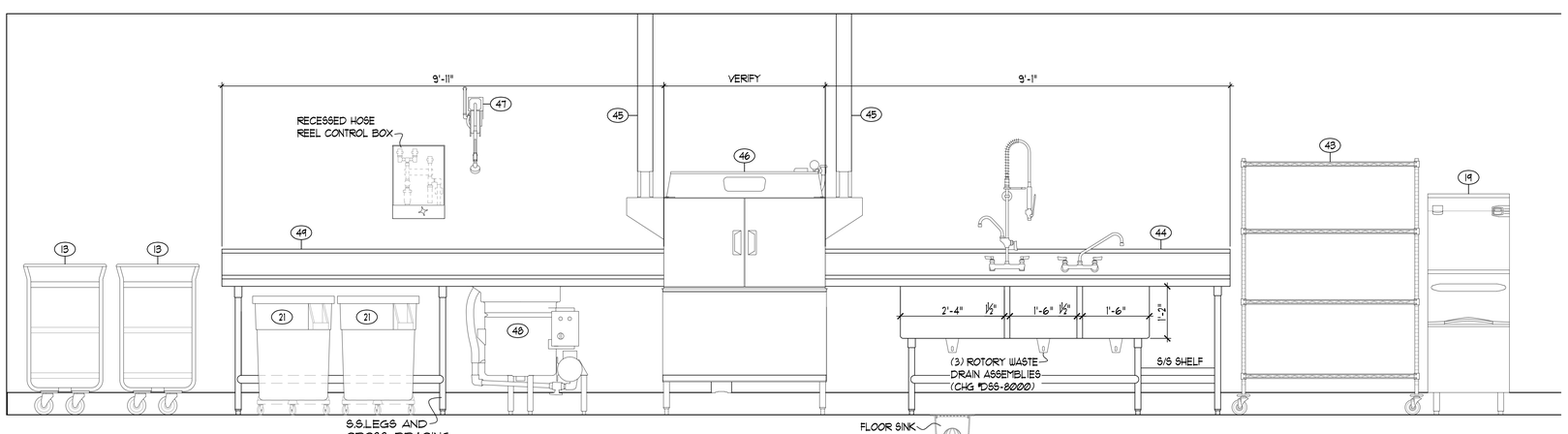

J ELEVATION SOILED/CLEAN DISHTABLES & WAREWASHER
3/4"=1'-0"

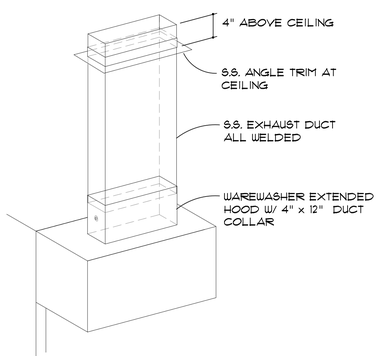

45 ISOMETRIC VAPOR EXHAUST DUCTS

PIVOT ARCHITECTURE

HALLIDAY
ENGINEERING
88 W. 7th, NOTWOOD
EUGENE, OREGON 97401
541-342-8263
FAX NO. 342-8266
EMAIL: HALLIDAY@EMAIL.COM

HOWARD RECONCILED SET
EUGENE SCHOOL DISTRICT
44 W. BROADWAY ST. EUGENE, OREGON
HOWARD ELEMENTARY SCHOOL

Food Service Fabrication Details

PROJECT #:	1339
ISSUE DATE:	10/28/2014
DRAWN:	SKR
CHECKED:	LJS

FS203

PRINTED ON: 4/19/2014 6:48:50 PM FROM FILE: S:\2013\1336-4_Howard_Elementary_School\Drawings\Revit\1339_HES_ARCH_Bldg_14.rvt

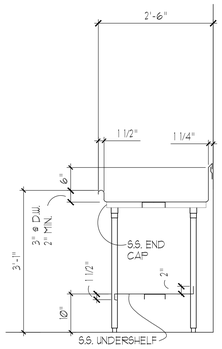

1/44 SECTION
3/4"=1'-0"

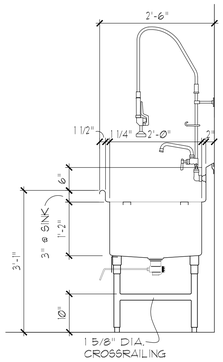

2/44 SECTION
3/4"=1'-0"

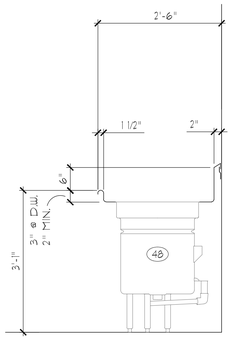

1/49 SECTION
3/4"=1'-0"

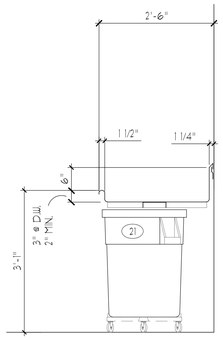

2/49 SECTION
3/4"=1'-0"

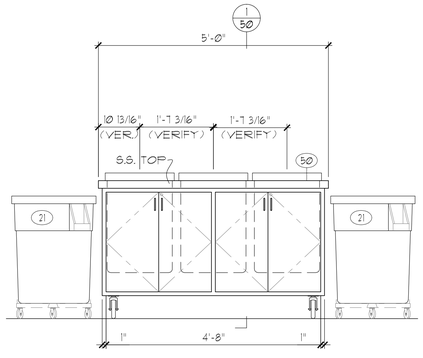

K ELEVATION MOBILE TRAY/TRASH/RECYCLING COUNTER
3/4"=1'-0"

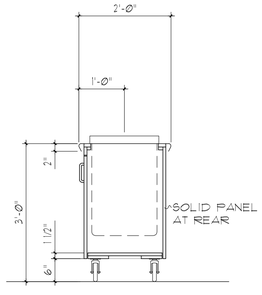

1/50 SECTION
3/4"=1'-0"

PIVOT ARCHITECTURE

HALLIDAY ENGINEERING
88 E. 7TH AVENUE
EUGENE, OR 97401
PHONE: 541-344-6953
FAX: 541-344-6955
WWW.HALLIDAYENGINEERING.COM

LICENSED PROFESSIONAL ENGINEER
LEON L. HALLIDAY
OREGON
FCS
INTERNATIONAL
FOOD SERVICE SPECIALISTS
INSTITUTE

HOWARD RECONCILED SET

EUGENE SCHOOL DISTRICT
4J
44 W. BROADWAY ST. EUGENE, OREGON

HOWARD ELEMENTARY SCHOOL

Food Service Fabrication Details

PROJECT #	1336
ISSUE DATE:	10/28/2014
DRAWN:	SR1
CHECKED:	LB

REVISIONS:

FS204

PRINTED ON: 4/19/2014 6:48:50 PM FROM FILE: S:\2013\1336-4j_Howard_Elementary_School\Drawings\Rev#1\1336_HES_ARCH_Bldg_14.rvt
© 2014 PIVOT ARCHITECTURE

© 2014 PIVOT ARCHITECTURE

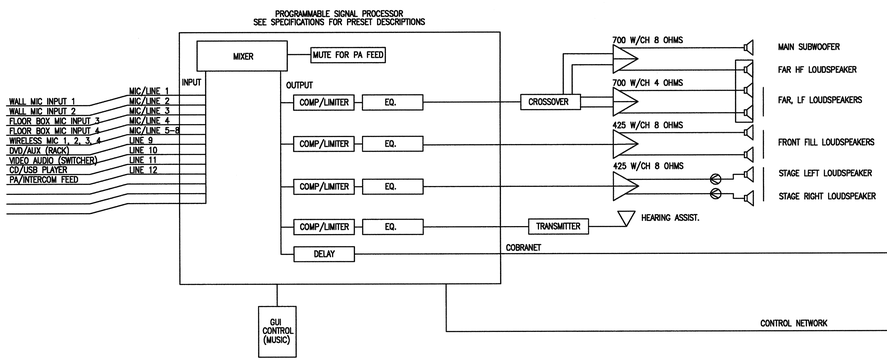

A GYM/STAGE FUNCTIONAL DIAGRAM

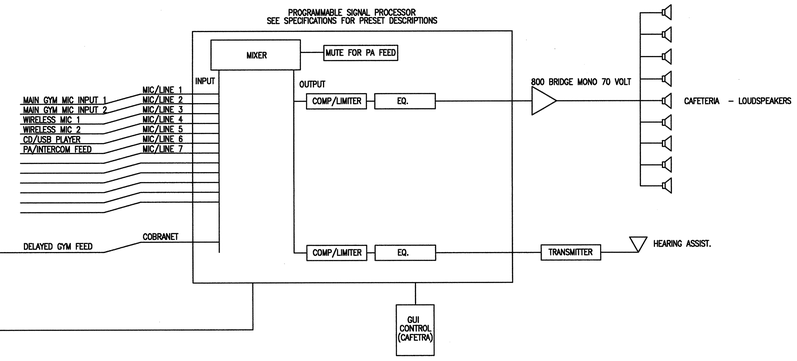

B CAFETERIA – FUNCTIONAL DIAGRAM

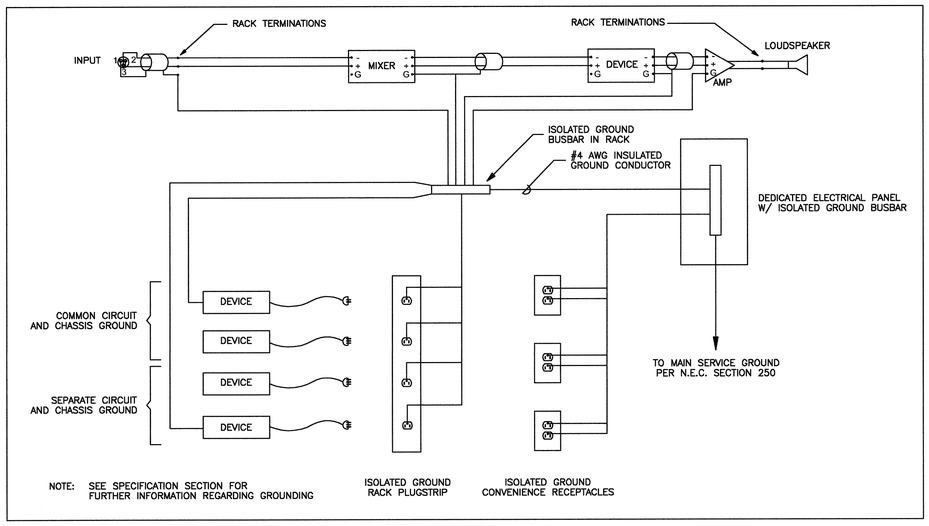

D GROUNDING DIAGRAM

NO SCALE

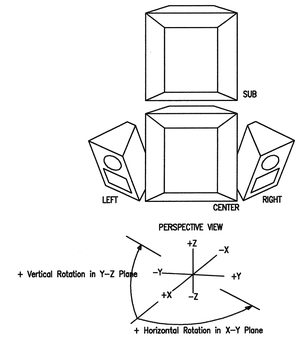

NOTES: ORIGIN AT CENTER OF STAGE ON WALL
X–AXIS TRAVELS ALONG BASKETBALL COURT BEGINNING AT STAGE WALL
Y–AXIS TRAVELS LEFT & RIGHT BEGINNING AT CENTER OF STAGE
Z–DIST IS 0' 0" AT GYM FLOOR

LOUDSPEAKER	NOM. COV.	POSITION			AIMING ANGLE		
		Z–DIST.	X–DIST.	Y–DIST.	VERT.	HORIZ.	ROT.
SUB	N/A	+27' 6"	+2' 3"	0' 0"	–10°	0°	0°
CENTER	90 X 40	+25' 6"	+2' 3"	0' 0"	–10°	0	0°
LEFT	90 X 60	+25' 6"	+2' 3"	–3' 0"	–34°	–70°	0°
RIGHT	90 X 60	+25' 6"	+2' 3"	+3' 0"	–34°	+70°	0°

C GYMNASIUM LOUDSPEAKER CLUSTER AIMING

#	TYPE	DESCRIPTION	BACK BOX	MOUNTING	LOCATION	CCT #'s
1	–	S.S. RACK	BY SS CNTR	FLOOR	MUSIC RM	–
2	E	MIC RECEPTACLE	BY OTHERS	FLOOR BOX	STAGE RIGHT	1
3	E	MIC RECEPTACLE	BY OTHERS	FLOOR BOX	STAGE LEFT	2
4	E	MIC RECEPTACLE	1 GANG	FLUSH 18" AFF	MUSIC RM WALL	3
5	E	MIC RECEPTACLE	1 GANG	FLUSH 18" AFF	MUSIC RM WALL	4
6	–	WRLS MIC ANT.	1 GANG	FLUSH 264" AFF	GYM	–
7	–	HEARING ASST. ANT	1 GANG	FLUSH 264" AFF	GYM	–
8						
9						
10						
11						
12						
13						
14						
15	–	LDSPKR J. BOX	BY SS CNTR	FLUSH 324" AFF	GYM	–
16	G	SPKR RECEPTACLE	1 GANG	FLUSH 18" AFF	STAGE RIGHT	L
17	G	SPKR RECEPTACLE	1 GANG	FLUSH 18" AFF	STAGE RIGHT	R
18						
19						
20	–	S.S. RACK	BY SS CNTR	FLOOR	COMMUNITY RM	–
21	F	MIC RECEPTACLE	1 GANG	FLUSH 18" AFF	CAFETERIA	1, 2
22	–	HEARING ASST. ANT	1 GANG	FLUSH 144" AFF	CAFETERIA	–
23	–	WRLS MIC ANT.	1 GANG	FLUSH 144" AFF	CAFETERIA	–
24						
25						
31	–	LDSPKR J. BOX	1 GANG	SURFACE–TRUSS	CAFETERIA	–
32	–	LDSPKR J. BOX	1 GANG	SURFACE–TRUSS	CAFETERIA	–
33	–	LDSPKR J. BOX	1 GANG	SURFACE–TRUSS	CAFETERIA	–
34	–	LDSPKR J. BOX	1 GANG	SURFACE–TRUSS	CAFETERIA	–
35	–	LDSPKR J. BOX	1 GANG	SURFACE–TRUSS	CAFETERIA	–
36	–	LDSPKR J. BOX	1 GANG	SURFACE–TRUSS	CAFETERIA	–
37	–	LDSPKR J. BOX	1 GANG	SURFACE–TRUSS	CAFETERIA	–
38	–	LDSPKR J. BOX	1 GANG	SURFACE–TRUSS	CAFETERIA	–
39	–	LDSPKR J. BOX	1 GANG	SURFACE–TRUSS	CAFETERIA	–

I RECEPTACLE SCHEDULE

NO SCALE

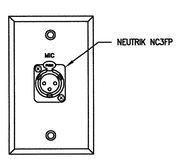

E MIC RECEPTACLE

BACK BOX 1 GANG

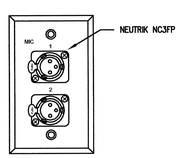

F MIC RECEPTACLE

BACK BOX 1 GANG

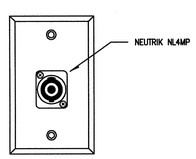

G SPEAKER RECEPTACLE

BACK BOX 1 GANG

TYPE	DESCRIPTION
A	BELDEN 9461
B	#12 AWG, STRANDED TWISTED PAIR, JACKETED
C	#18 AWG, STRANDED TWISTED PAIR, JACKETED
D	ANTENNA, COAX (AS REQUIRED)
E	CONTROL AND AUDIO NETWORK CAT–5

H CABLE SCHEDULE

INSTALLED BY SOUND SYSTEM CONTRACTOR
SEE SHEET SS111 FOR LOCATIONS

SOUND RACK
MIDDLE ATLANTIC WR SERIES

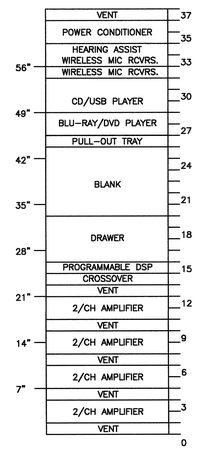

J STAGE/GYM SOUND SYSTEM RACK

NO SCALE

SOUND RACK
MIDDLE ATLANTIC WR SERIES

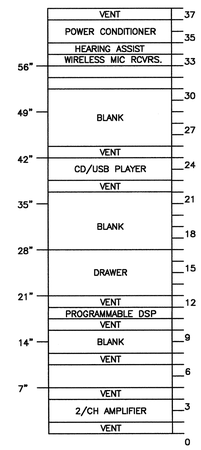

K CAFETERIA SOUND SYSTEM RACK

NO SCALE

PIVOT ARCHITECTURE

REGISTERED PROFESSIONAL ENGINEER 10156 OREGON JULY 13, 1979 RUSSELL N. ALTERMATT

E+R 12-31-15

Altermatt Associates, Inc.
Consultants in Acoustics
6745 SW 13th Avenue
Portland, Oregon 97219
503-221-1044

HOWARD RECONCILED SET

EUGENE SCHOOL DISTRICT
44 W. BROADWAY ST. EUGENE, OREGON
HOWARD ELEMENTARY SCHOOL

SOUND SYSTEM
FUNCTIONAL DIAGRAMS,
SCHEDULES, DETAILS

PROJECT #	1338 REVISIONS
ISSUE DATE:	10/28/2014
DRAWN:	RNA
CHECKED:	X

SS001

PRINTED ON: 4/18/2014 6:48:50 PM FROM FILE: S:\2013\1338-JL Howard_Elementary_School\Drawings\Revit\1338_HES_ARCH_Bldg_14.rvt

© 2014 PIVOT ARCHITECTURE

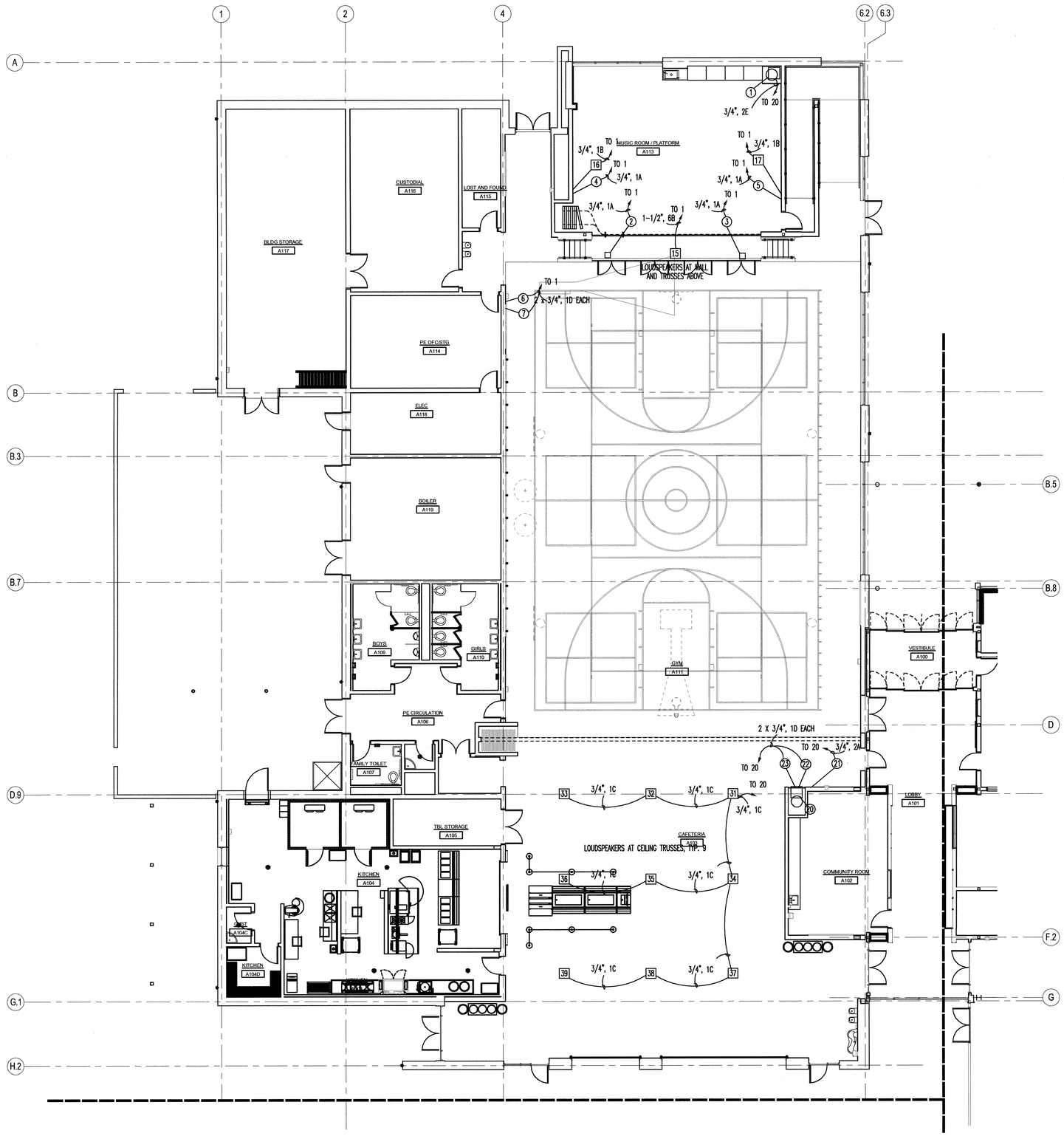

TYPE	DESCRIPTION
A	BELDEN 9461
B	#12 AWG, STRANDED TWISTED PAIR, JACKETED
C	#18 AWG, STRANDED TWISTED PAIR, JACKETED
D	ANTENNA, COAX (AS REQUIRED)
E	CONTROL AND AUDIO NETWORK CAT-5

(A) CABLE SCHEDULE

CABLE INSTALLED BY SOUND SYSTEM CONTRACTOR
SEE SHEET SS001 FOR RECEPTACLE SCHEDULE

SECTOR A PLAN - FIRST FLOOR (1)

SCALE: 1/8" = 1'-0"

PIVOT ARCHITECTURE

REGISTERED PROFESSIONAL ENGINEER 10156 OREGON JULY 13, 1979 RUSSELL N. ALTERMATT

Exp. 12-31-15

Altermatt Associates, Inc.
Consultants in Acoustics
6745 SW 13th Avenue
Portland, Oregon 97219
503-221-1044

HOWARD RECONCILED SET

EUGENE SCHOOL DISTRICT
44 W. BROADWAY ST. EUGENE, OREGON

HOWARD ELEMENTARY SCHOOL

SOUND SYSTEMS
CABLE AND CONDUIT

PROJECT #:	1338
ISSUE DATE:	10/28/2014
DRAWN:	RNA
CHECKED:	X

REVISIONS:

SS111

PRINTED ON: 4/18/2014 6:48:50 PM FROM FILE: S:\2013\1338-JL Howard_Elementary_School\Drawings\Revit\1338_HES_ARCH_Bldg_14.rvt